APPENDIX G :

USER'S MANUAL

This unit has been engineered and manufactured to ensure your personal safety, however improper use may result in potential e shock or fire hazards. In order to allow the proper operation of all safeguards incorporated in this display, observe the following basic rules for its installation, use, and servicing.

On Safety

Use only the power cord supplied with the unit. In case you use another power cord, make sure that it is certified by the applicable national standards if not being provided by the supplier. If the power cable is faulty in any way, please contact the manufacturer or the nearest authorized repair service provider for a replacement.

The power supply cord is used as the main disconnection device. Ensure that the socket-outlet is easily accessible after installation.

Operate the display only from a power source indicated in the specifications of this manual or listed on the display. If you are not sure what type of power supply you have in your home, consult with your dealer.

Overloaded AC outlets and extension cords are dangerous. So are frayed power cords and broken plugs. They may result in a shock or fire hazard. Call your service technician for replacement.

Do not Open the Display.
- There are no user serviceable components inside.
- There are Dangerous High Voltages inside, even when the power is OFF.
- Contact your dealer if the display is not operating properly.

To Avoid Personal Injury :
- Do not place the display on a sloping shelf unless properly secured.
- Use only a stand recommended by the manufacturer.

To Prevent Fire or Hazards:
- Always turn the display OFF if you leave the room for more than a short period of time. Never leave the display ON when leaving the house.
- Keep children from dropping or pushing objects into the display's cabinet openings. Some internal parts carry hazardous voltages.
- Do not add accessories that have not been designed for this display.
- During a lightning storm or when the display is to be left unattended for an extended period of time, unplug it from the wall outlet.

On Installation

Do not allow anything to rest upon or roll over the power cord, and do not place the display where the power cord is subject to damage.

Do not use this display near water such as near a bathtub, washbowl, kitchen sink, laundry tub, in a wet basement, or near a swimming pool.
Displays are provided with ventilation openings in the cabinet to allow the release of heat generated during operation. If these openings are blocked, built-up heat can cause failures which may result in a fire hazard. Therefore, NEVER:

- Block the bottom ventilation slots by placing the display on a bed, sofa, rug, etc.
- Place the display in a built-in enclosure unless proper ventilation is provided.
- Cover the openings with cloth or other material.
- Place the display near or over a radiator or heat source.

Do not rub or strike the Active Matrix LCD with anything hard as this may scratch, mar, or damage the Active Matrix LCD permanently.

Do not press the LCD screen with your finger for a long time as this may cause some afterimages.

Some dot defects may appear as Red, Green or Blue spots on the screen. However, this will have no impact or effect on the display performance.

If possible, use the recommended resolution to obtain the best image quality for your LCD display. If used under any mode except the recommended resolution, some scaled or processed images may appear on the screen. However, this is characteristic of the fixed-resolution LCD panel.

On Cleaning

- Unplug the display before cleaning the face of the display screen.
- Use a slightly damp (not wet) cloth. Do not use an aerosol directly on the display screen because over-spraying may cause electrical shock.

On Repacking

- Do not throw away the carton and packing materials. They make an ideal container in which to transport the unit. When shipping the unit to another location, repack it in its original material.

Using the Computer

1. Connect the signal cable. When attached, tighten the thumbscrews to secure the connection.
2. Connect the power cord into a proper power outlet that is easily accessible and close to the display.

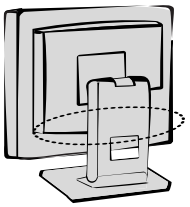

NOTE

- This is a simplified representation of the rear view.
- This rear view represents a general model; your display may differ from the view as shown.

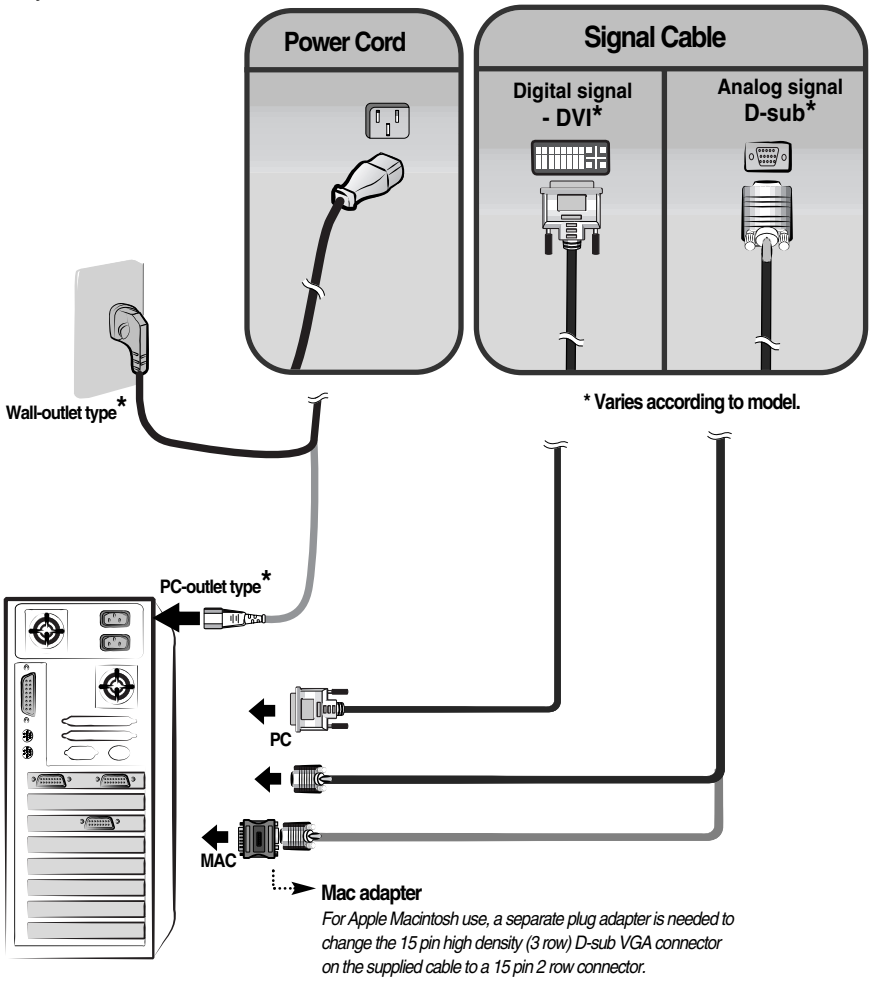

Side Jack

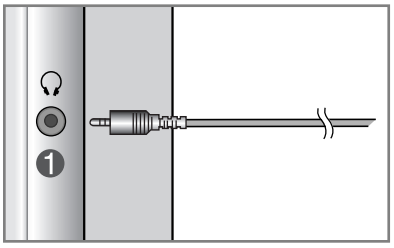

<Display>

❶ **Headphone/Earphone Input**
Automatically mutes the speaker volume when the headphones are plugged in.

Bottom

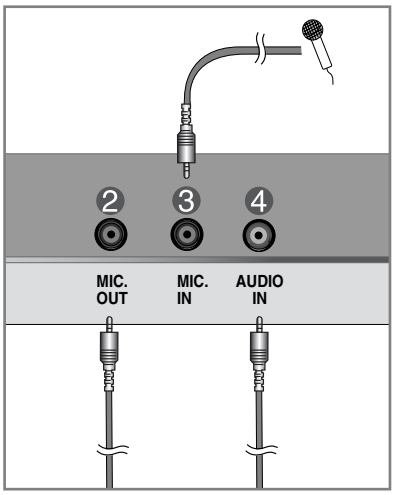

<Display - Back>

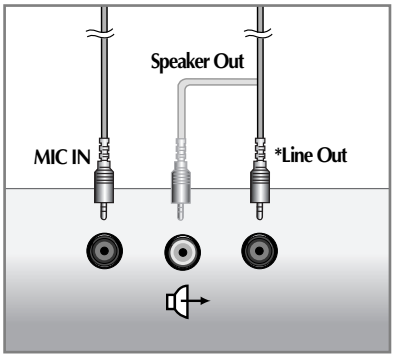

<Jack of the PC sound card>

❷ **Microphone Output**
Connects to the microphone jack of the PC sound card.

❸ **Microphone Input**
Connects to the microphone.

❹ **Audio Input**
Connects to the *LINE OUT jack of the PC sound card.

***LINE OUT**
A terminal used to connect to the speaker including a built-in amplifier (Amp). Make sure that the connecting terminal of the PC sound card is checked before connecting. If the Audio Out of PC sound card has only Speaker Out, reduce the PC volume.

If the Audio Out of the PC sound card supports both Speaker Out and Line Out, convert to Line Out using the card jumper of the program (Refer to the Sound Card Manual).

Front Panel Controls

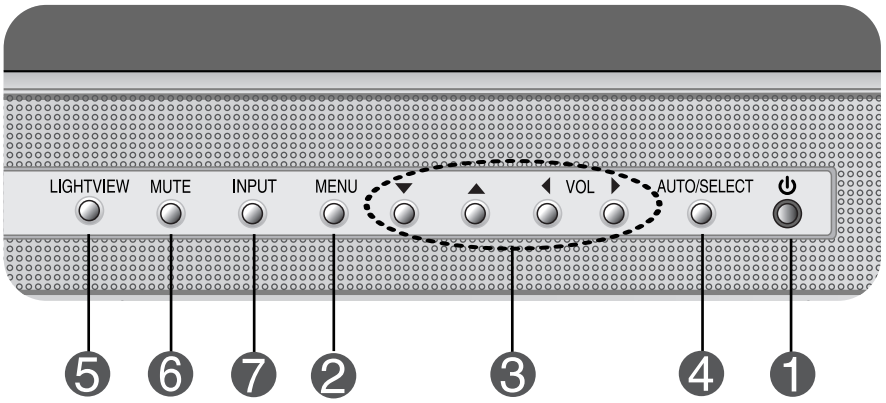

Control		Function
1	**Power Button**	Use this button to turn the display on or off.
	Power (DPMS) Indicator	This Indicator lights up green when the display operates normally. If the display is in DPM (Energy Saving) mode, this indicator color changes to amber.
2	**MENU Button**	Use this button to enter or exit the On Screen Display.
3	**▼▲◀▶ Buttons**	Use these buttons to choose or adjust items in the On Screen Display.
4	**AUTO/SELECT Button**	Use this button to enter a selection in the On Screen Display.

Control	Direct Access Function
37	4 **VOLUME: ◀ ▶** Use these buttons to decrease or increase the volume level.

Control	Direct Access Function
PROCESSING AUTO CONFIGURATION	**4 AUTO adjustment function** When adjusting your display settings, always press the **AUTO/SELECT** button before entering the On Screen Display(OSD). This will automatically adjust your display image to the ideal settings for the current screen resolution size (display mode). The best display mode is **1280x1024**.
LIGHT VIEW DAY TEXT MOVIE PHOTO NIGHT TEXT MOVIE PHOTO USER MODE	**5 LIGHT VIEW:** This function optimizes the brightness, contrast or color value to the surrounding conditions and settings and enables you to enjoy the most suitable picture by adjusting the surroundings (DAY/NIGHT/USER MODE). • TEXT: For viewing letters • MOVIE: For viewing movies • PHOTO: For viewing pictures or the photographs • USER MODE: This function memorizes the manual adjustment -Brightness, Contrast and Color value on the On Screen Display.
37	**6 MUTE:** Used to select mute on (means sound off) and mute off (means sound on).
	7 INPUT Use this button to make Dsub or DVI connector active. This feature is used when two computers are connected to the display. The default setting is Dsub.
CONTROLS LOCKED CONTROLS UNLOCKED	**CONTROLS LOCKED/UNLOCKED** **: MENU and ▶** This function allows you to secure the current control settings, so that they cannot be inadvertently changed. Press and hold the MENU button and ▶ button for 3 seconds: the message **"CONTROLS LOCKED"** appears. You can unlock the OSD controls at any time by pushing the MENU button and ▶ button for 3 seconds: the message **"CONTROLS UNLOCKED"** will appear.

Screen Adjustment

Making adjustments to the image size, position and operating parameters of the display is quick and easy with the On Screen Display Control system. A short example is given below to familiarize you with the use of the controls. The following section is an outline of the available adjustments and selections you can make using the OSD.

NOTE

- Allow the display to stabilize for at least 30 minutes before making image adjustments.

To make adjustments in the On Screen Display, follow these steps:

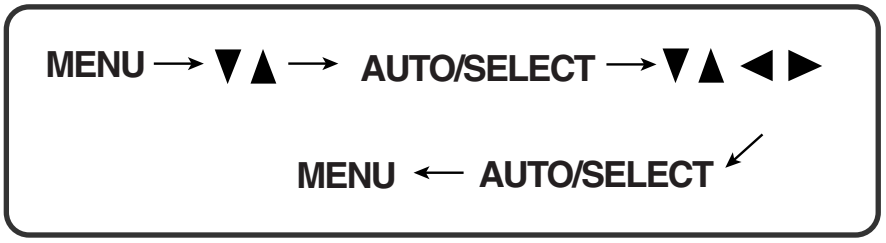

1. Press the MENU Button, then the main menu of the OSD appears.
2. To access a control, use the ▼ or ▲ Buttons. When the icon you want becomes highlighted, press the AUTO/ SELECT Button.
3. Use the ▼▲ ◄ ► Buttons to adjust the item to the desired level.
4. Accept the changes by pressing the AUTO/SELECT Button.
5. Exit the OSD by Pressing the MENU Button.

On Screen Display(OSD) Selection and Adjustment

The following table indicates all the On Screen Display control, adjustment, and setting menus.

Main menu	Sub menu		A	D	Reference
BRIGHTNESS CONTRAST	BRIGHTNESS		●	●	To adjust the brightness and contrast of the screen
	CONTRAST		●	●	
COLOR	PRESET	9300K	●	●	To customize the color of the screen
		6500K	●	●	
	R/G/B(User Color)		●	●	
POSITION	V POSITION		●		To adjust the position of the screen
	H POSITION		●		
TRACKING	CLOCK		●		To improve the clarity and stability of the screen
	PHASE		●		
AUDIO	VOLUME		●	●	To adjust the audio function.
	TREBLE		●	●	
	BASS		●	●	
	BALANCE		●	●	
SETUP	LANGUAGE*		●	●	To customize the screen status for a user's operating environment
	IMAGE SIZE*		●	●	
	OSD POSITION*		●	●	
	SIGNAL*		●	●	

● : Adjustable
A : Analog Input
D : Digital Input

NOTE

- The order of icons may differ depending on the model (A8~A11).
- * This function is available for designated models only.

You were introduced to the procedure of selecting and adjusting an item using the OSD system. Listed below are the icons, icon names, and icon descriptions of the all items shown on the Menu.

To adjust the brightness and contrast of the screen

OSD Adjust	Description
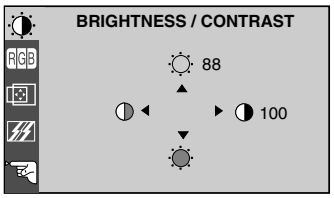	**BRIGHTNESS** To adjust the brightness of the screen. **CONTRAST** To adjust the contrast of the screen.

To customize the color of the screen

OSD Adjust	Description
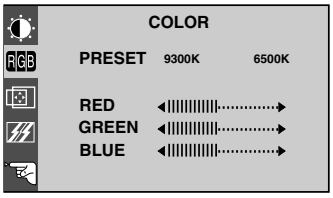	**PRESET** **9300K/6500K** Select the screen color. • 9300K: Slightly bluish white. • 6500K: Slightly reddish white. **RED** **GREEN** **BLUE** Set your own color levels.

To adjust the position of the screen

OSD Adjust	Description
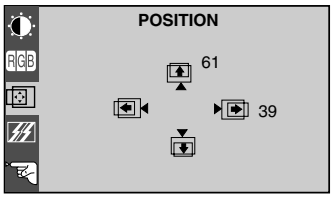	**Vertical Position** To move image up and down. **Horizontal Position** To move image left and right.

To improve the clarity and stability of the screen

OSD Adjust	Description
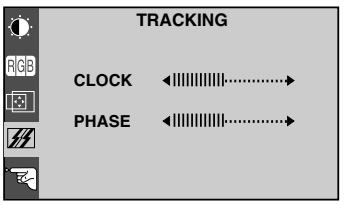	**CLOCK** To minimize any vertical bars or stripes visible on the screen background.The horizontal screen size will also change. **PHASE** To adjust the focus of the display. This item allows you to remove any horizontal noise and clear or sharpen the image of characters.

To adjust the audio function

OSD Adjust	Description
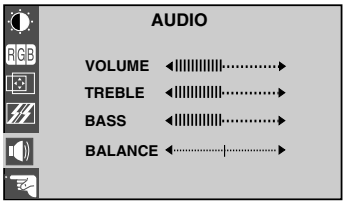	**VOLUME** To decrease or increase volume level. **TREBLE** To raises or lowers Treble level. **BASS** To raises or lowers Bass level. **BALANCE** To adjust the balance level.

To customize the screen status for a user's operating environment

OSD Adjust	Description
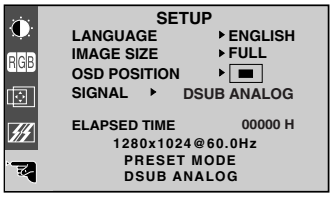	
LANGUAGE*	To choose the language in which the control names are displayed.
IMAGE SIZE*	This function displays the image in its original size or enlarged size so as to fit in the full screen of the LCD panel.
OSD POSITION*	To adjust position of the OSD window on the screen.
SIGNAL*	To select DSUB ANALOG, DVI DIGITAL or DVI ANALOG / as the active input. This feature is used when two computers are connected to the display. The display automatically detects the proper input when only one video source is connected.
	ELAPSED TIME To display the use time of display.

NOTE

- * This function is available for designated models only. PAGE A8

Check the following before calling for service.

No image appears	
◉ **Is the power cord of the display connected?**	• Check and see if the power cord is connected properly to the power outlet.
◉ **Is the power indicator light on?**	• Press the Power button.
◉ **Is the power on and the power indicator green?**	• Adjust the brightness and the contrast.
◉ **Is the power indicator amber?**	• If the display is in power saving mode, try moving the mouse or pressing any key on the keyboard to bring up the screen.
◉ **Do you see an "INPUT SIGNAL OUT OF RANGE" message on the screen?**	• This message appears when the signal from the PC (video card) is out of horizontal or vertical frequency range of the display. See the 'Specifications' section of this manual and configure your display again.
◉ **Do you see a "NO SIGNAL" message on the screen?**	• This message appears when the signal cable between your PC and your display is not connected. Check the signal cable and try again.

Have you installed the display driver?	
◉ **Have you installed the display driver?**	• Be sure to install the display driver from the display driver CD (or diskette) that comes with your display. Or, you can also download the driver from our web site: http://www.lge.com.

Display image is incorrect	
◉ **Display Position is incorrect.**	• Press the **AUTO/SELECT** button to automatically adjust your display image to the ideal setting. If the results are unsatisfactory, adjust the image position using the H position and V position icon in the on screen display.
◉ **On the screen background, vertical bars or stripes are visible.**	• Press the **AUTO/SELECT** button to automatically adjust your display image to the ideal setting. If the results are unsatisfactory, decrease the vertical bars or stripes using the **CLOCK** icon in the on screen display.
◉ **Any horizontal noise appearing in any image or characters are not clearly portrayed.**	• Press the **AUTO/SELECT** button to automatically adjust your display image to the ideal setting. If the results are unsatisfactory, decrease the horizontal bars using the **PHASE** icon in the on screen display.

Specifications

Display	18.1 inches (45.97cm) Flat Panel Active matrix-TFT LCD Anti-Glare coating 18.1 inches viewable 0.28mm pixel pitch	
Sync Input	Horizontal Freq. Vertical Freq.	30 - 83kHz (Automatic) 56 - 85Hz (Automatic)
	Input Form	Separate TTL, Positive/Negative Composite TTL Positive/Negative SOG (Sync On Green) Digital
Video Input	Signal Input	15 pin D-Sub Connector DVI - I connector (Digital/Analog)
	Input Form	RGB Analog (0.7Vp-p/75ohm), Digital
Resolution	Max	Digital:VESA 1280 x 1024@60Hz Analog:VESA 1280 x 1024@75Hz
	Recommend	VESA 1280 x 1024@60Hz
Plug&Play	E-DDC	
Audio	RMS Audio Output Input Sensitivity Speaker Impedance	1W+1W(R+L) 0.7Vrms 4Ω
Power Consumption	Normal Stand-by/Suspend Power Off	: 55W ≤ 3W ≤ 3W
Dimensions &Weight (with tilt/ swivel stand)	Width Height Depth	40.6 cm / 15.98 inches 43.1 cm / 16.97 inches 22.3 cm / 8.78 inches
	Net	8.0 kg (17.64 lbs)
Tilt/Swivel Range	Tilt Swivel	-5˚~30˚ 360˚
Power Input	AC 100-240V 50/60Hz 1.0A	

Environmental Conditions	Operating Conditions Temperature 10˚C to 35 ˚C Humidity 10 % to 80 % non-Condensing
	Storage Conditions Temperature -20˚C to 60 ˚C Humidity 5 % to 95 % non-Condensing
Tilt/Swivel Stand	Attached(O), Detached ( )
Signal cable	Attached( ), Detached (O)
Power cord	Wall-outlet type or PC-outlet type
Regulations	TCO99

NOTE

- Information in this document is subject to change without notice.

Preset Modes (Resolution)

Display Modes (Resolution)			Horizontal Freq. (kHz)	Vertical Freq. (Hz)
1	VGA	640 x 350	31.469	70
2	VGA	720 x 400	31.468	70
3	VGA	640 x 480	31.469	60
4	VESA	640 x 480	37.500	75
5	VESA	640 x 480	43.269	85
6	VESA	800 x 600	37.879	60
7	VESA	800 x 600	46.875	75
8	VESA	800 x 600	53.674	85
9	MAC	832 x 624	49.725	75
10	VESA	1024 x 768	48.363	60
11	VESA	1024 x 768	60.123	75
12	VESA	1024 x 768	68.677	85
13	MAC	1152 x 870	68.681	75
14	VESA	1152 x 900	61.805	65
15	VESA	1280 x 1024	63.981	60
16	VESA	1280 x 1024	79.976	75

VESA wall mounting
Connected to another object (stand type and wall-mounted type. This monitor accepts a VESA-compliant mounting interface pad.)

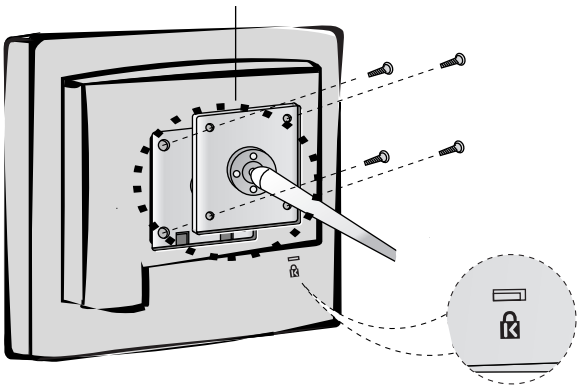

Kensington Security Slot- optional
Connected to a locking cable that can be purchased separately at most computer stores

Signal Connector Pin Assignment

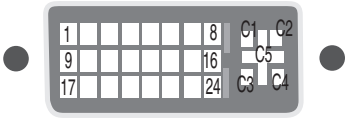

■ DVI-I Connector

Pin	Signal(DVI-I)	Pin	Signal(DVI-I)
1	T. M. D. S. Data2-	16	Hot Plug Detect
2	T. M. D. S. Data2+	17	T. M. D. S. Data0-
3	T. M. D. S. Data2/4 Shield	18	T. M. D. S. Data0+
4	T. M. D. S. Data4-	19	T. M. D. S. Data0/5 Shield
5	T. M. D. S. Data4+	20	T. M. D. S. Data5-
6	DDC Clock	21	T. M. D. S. Data5+
7	DDC Data	22	T. M. D. S. Clock Shield
8	Analog Vertical Sync.	23	T. M. D. S. Clock+
9	T. M. D. S. Data1-	24	T. M. D. S. Clock-
10	T. M. D. S. Data1+	C1	Analog Red
11	T. M. D. S. Data1/3 Shield	C2	Analog Green
12	T. M. D. S. Data3-	C3	Analog Blue
13	T. M. D. S. Data3+	C4	Analog H. Sync.
14	+5V Power	C5	Analog Ground
15	Ground (return for +5V, H. Sync. and V. Sync.)		

T. M. D. S. (Transition Minimized Differential Signaling)

Making use of USB (Universal Serial Bus) - Optional

USB (Universal Serial Bus) is an innovation in connecting your different desktop peripherals conveniently to your computer. By using the USB, you will be able to connect your mouse, keyboard, and other peripherals to your display instead of having to connect them to your computer. This will give you greater flexibility in setting up your system. USB allows you to connect a chain of up to 120 devices on a single USB port; and you can "hot" plug (attach them while the computer is running) or unplug them while maintaining the Plug and the Plug auto detection and configuration. This display has an integrated BUS-powered USB hub, allowing up to 2 other USB devices to be attached it.

USB connection

1. Connect the upstream port of the display to the downstream port of the USB compliant PC or another hub using the USB cable. (Computer must have a USB port)
2. Connect the USB compliant peripherals to the downstream ports of the display.

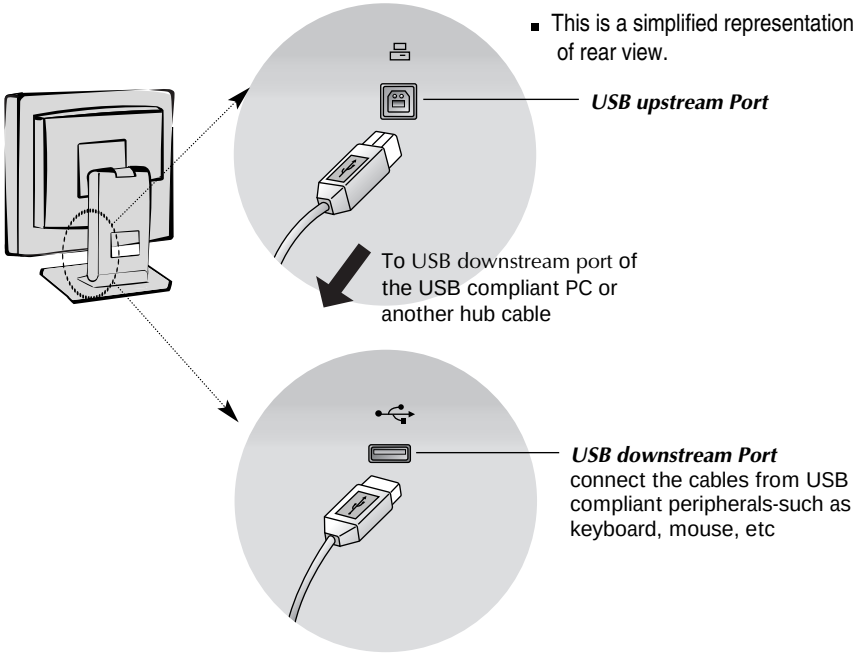

NOTE

- To activate the USB hub function, the display must be connected to a USB compliant PC(OS) or another hub with the USB cable(enclosed).
- When connecting the USB cable, check that the shape of the connector at the cable side matches the shape at the connecting side.
- Even if the display is in a power saving mode, USB compliant devices will function when they are connected the USB ports(both the upstream and downstream) of the display.

USB Specifications

USB standard	Rev. 1.1 complied BUS-powered hub
Downstream power supply	100mA for each (MAX)
Communication speed	12 Mbps (full), 1.5 Mbps (low)
USB port	1 Upstream port 2 Downstream ports

IMPORTANT: These USB connectors are not designed for use with high-power USB devices such as a video camera, scanner, etc. LGE recommends connecting high-power USB devices directly to the computer

Reference Guide

for Precaution,
Service, Warranty
and Diskette Install

English
Deutsch
Français
Italiano
Español
Nederlands
Português

English

Important Precautions 1
DDC (Display Data Channel) 1
Energy Saving Design 2
Service 2

Deutsch

Wichtige Hinweise 2
DDC (Display Data Channel) 3
Energieversorgung 3
Wartung 3

Français

Consignes de Sécurité 4
DDC (Display Data Channel) 4
Caractéristique D'économie D'énergie 5
Maintenance du Moniteur 5

Italiano

Precauzioni Importanti 5
DDC (Display Data Channel) Canale Dati del Monitor 6
Modello Conforme alla Normativa sul Risparmio
Energetico 6
Manutenzione 6

Español

Precauciones Importantes 7
DDC (Canal de despliegue de información) 7
Diseño de Ahorro de Energía 8
Servicio 8

Nederlands

Belangrijke voorzorgsmaatregelen 8
DDC (Display Data Channel) 9
Energiebesparingssysteem 9
Onderhoud 9

Português

Precauções Importantes 10
DDC (Display Data Channel) 10
Sistema de Gerenciamento de Energia 11
Manutenção 11

Regulatory Information

FCC Compliance Statement 11
Canadian DOC Notice 11
CE Conformity Notice (for Europe) 12
Low Radiation Compliance (MPR II).....12
TCO95 12
TCO99 13
EPA (U.S.A only).....14
NOM MARK (Mexico only) 14

Warranty

the United States and Canada - CDT Monitor 15
the United States and Canada - LCD Monitor.....16
Australia - CDT & LCD Monitor 17
Brazil - CDT & LCD Monitor 18
Mexico - CDT Monitor.....19
the United Kingdom - CDT&LCD Monitor 21

Monitor Driver Installation

Monitor Driver Installation 22
USB Install Guide 22

Monitor Registration

The model and serial numbers are found on the rear of this unit. These numbers are unique to this unit and not available to others. You should record requested information here and retain this guide as a permanent record of your purchase. Staple your receipt here.

Date of Purchase : _____
Dealer Purchased From : _____
Dealer Address : _____
Dealer Phone No. : _____
Model No. : _____
Serial No. : _____

Important Precautions

This unit has been engineered and manufactured to assure your personal safety, but improper use can result in potential electrical shock or fire hazard. In order not to defeat the safeguards incorporated in this monitor, observe the following basic rules for its installation, use, and servicing. Also follow all warnings and instructions marked directly on your monitor.

On Safety

Use only the power cord supplied with the unit. In case you use another power cord, make sure that it is certified by the applicable national standards if not being provided by the supplier. If the power cable is faulty in any way, please contact the manufacturer or the nearest authorized repair service provider for a replacement.

Operate the monitor only from a power source indicated in the specifications of this manual or listed on the monitor. If you are not sure what type of power supply you have in your home, consult with your dealer.

Overloaded AC outlets and extension cords are dangerous. So are frayed power cords and broken plugs. They may result in a shock or fire hazard. Call your service technician for replacement.

Do not Open the Monitor.
- There are no user serviceable components inside.
- There are Dangerous High Voltages inside, even when the power is OFF.
- Contact your dealer if the monitor is not operating properly.

To Avoid Personal Injury :
- Do not place the monitor on a sloping shelf unless properly secured.
- Use only a stand recommended by the manufacturer.
- Do not try to roll a stand with small casters across thresholds or deep pile carpets.

To Prevent Fire or Hazards:
- Always turn the monitor OFF if you leave the room for more than a short period of time. Never leave the monitor ON when leaving the house.
- Keep children from dropping or pushing objects into the monitor's cabinet openings. Some internal parts carry hazardous voltages.
- Do not add accessories that have not been designed for this monitor.
- During a lightning storm or when the monitor is to be left unattended for an extended period of time, unplug it from the wall outlet.
- Do not bring magnetic devices such as magnets or motors near the picture tube.

On Installation

Do not allow anything to rest upon or roll over the power cord, and do not place the monitor where the power cord is subject to damage.

Do not use this monitor near water such as near a bathtub, washbowl, kitchen sink, laundry tub, in a wet basement, or near a swimming pool.

Monitors are provided with ventilation openings in the cabinet to allow the release of heat generated during operation. If these openings are blocked, built-up heat can cause failures which may result in a fire hazard. Therefore, NEVER:
- Block the bottom ventilation slots by placing the monitor on a bed, sofa, rug, etc.
- Place the monitor in a built-in enclosure unless proper ventilation is provided.
- Cover the openings with cloth or other material.
- Place the monitor near or over a radiator or heat source.

LCD Monitor only

Do not rub or strike the Active Matrix LCD with anything hard as this may scratch, mar, or damage the Active Matrix LCD permanently.

Do not press the LCD screen with your finger for a long time as this may incur some afterimages.

Some dot defects may appear on the screen, like Red, Green or Blue spots on the screen. However, this will have no impact or effect on the monitor performance.

If possible, use the recommended resolution to obtain the best image quality for your LCD monitor. If used under any modes except the recommended resolution, some scaled or processed images may appear on the screen. However, this is the characteristics of the LCD panel which has a fixed resolution.

On Cleaning

- Unplug the monitor before cleaning the face of the monitor screen.
- Use a slightly damp (not wet) cloth. Do not use an aerosol directly on the monitor screen because overspray may cause electrical shock.

On Repacking

- Do not throw away the carton and packing materials. They make an ideal container in which to transport the unit. When shipping the unit to another location, repack it in its original material.

DDC (Display Data Channel)

DDC is a communication channel over which the monitor automatically informs the host system (PC) about its capabilities.

DDC protocol

① DDC1/DDC2B
An uni-directional communication channel.

② DDC 2AB/DDC2B+/DDC2Bi
A bi-directional communication channel.

Note

- *PC must support DDC functions to do this.*

English

Energy Saving Design

This monitor complies with the EPA's Energy Star program, which is a program designed to have manufacturers of computer equipment build circuitry into their products to reduce power consumption during time of non-use.

When this monitor is used with a Green or EPA Energy Star PC, or a PC with a screen blanking software following the VESA Display Power Management Signalling (DPMS) protocol, this monitor can conserve significant energy by reducing power consumption during periods of non-use.

There are 2 signal lines, 4 modes of operation.
; Normal, Standby, Suspend and Off.

Mode	Horizontal Sync.	Vertical Sync.	LED Color
Normal	On	On	Green
Standby	Off	On	Amber
Suspend	On	Off	Amber
Off	Off	Off	Amber

When you awaken your PC by hitting a key or moving the mouse, the monitor will also awaken to its normal operating mode, indicated by the green Power LED light.

Note

- *The energy saving Design for monitors only work when connected to computers that have energy saving features.*

Service

Unplug the monitor from the wall outlet and refer servicing to qualified service personnel when :

- The power cord or plug is damaged or frayed.
- Liquid has been spilled into the monitor.
- The monitor has been exposed to rain or water.
- The monitor does not operate normally following the operating instructions. Adjust only those controls that are covered in the operating instructions. An improper adjustment of other controls may result in damage and often requires extensive work by a qualified technician to restore the monitor to normal operation.
- The monitor has been dropped or the cabinet has been damaged.
- The monitor exhibits a distinct change in performance.
- Snapping or popping from the monitor is continuous or frequent while the monitor is operating. It is normal for some monitors to make occasional sounds when being turned on or off, or when changing video modes.

Do not attempt to service the monitor yourself, as opening or removing covers may expose you to dangerous voltage or other hazards. Refer all servicing to qualified service personnel.

Deutsch

Wichtige Hinweise

Bei der Konstruktion bzw. Herstellung dieses Monitors wurde insbesondere auf eine höchstmögliche Betriebssicherheit geachtet. Um eine eventuell durch Fehlbedienung verursachte Brand - und Stromschlaggefahr auszuschliessen, sollten Sie jedoch bei Inbetriebnahme und Benutzung des Gerätes die nachfolgenden Sicherheitshinweise genau beachten. Beachten Sie ausserdem die am Monitorgehäuse angebrachten warnhinweise und Anweisungen.

Zur Sicherheit

Benutzen Sie ausschliesslich das mitgelieferte abgeschirmte Netzkabel. Falls Sie ein anderes als das vom Hersteller gelieferte Netzkabel verwenden, achten Sie darauf, daß es der nationalen Norm entspricht. Wenn das Netzkabel in irgendeiner Weise defekt ist. Wenden Sie sich an den Hersteller oder den nächsten autorisierten Reparaturservice, um Ersatz zu erhalten.

Stellen Sie sicher, dass die angelegte Netzspannung den Geräteanforderungen entpricht (siehe dazu die technischen Daten in diesem Handbuch bzw. die Angaben auf der Rückseite des Monitors). Bei Fragen zur Spannungsversorgung den Händler zu Rate ziehen.

Vermeiden Sie eine Überlastung des benutzten Stromkreises oder einer eventuell eingesetzten Mehrfachstec1Sie ausserdem unbedingt darauf, dass Netzkabel und -stecker unbeschädigt sind, um Brand und Stromschlaggefahr auszuschliessen. Lassen Sie alle notwendigen Reparaturen von einem qualifizierten Service-Techniker ausführen.

Öffnen Sie den Monitor auf keinen Fall.

- Im Innern des Monitors befinden sich keinerlei vom Benutzer zu wartende Teile.
- Da allerdings selbst bei ausgeschaltetem Monitor im Gehäuse gefährliche Spannungen anliegen, sollte bei einer Fehlfunktion des Monitors unbedingt der Händler zu Rate gezogen werden.

Um eine Verletzung des Benutzers auszuschliessen:

- den Monitor keinesfalls auf einer instabilen unterlage abstellen.
- ausschliesslich vom Hersteller empfohlene Monitorsockel und -tische benutzen.
- den Monitor nicht mit einem Rolltisch über hohe Türschwellen oder sehr weiche Teppiche fahren.

Um die Gefahr eines Brandes oder elektrischen Schlages auszuschliessen:

- den Monitor ausschalten, wenn Sie ihn für längere Zeit nicht benutzen bzw. wenn Sie das Büro oder die Wohnung verlassen.
- auf keinen Fall irgendwelche Gegenstände in die Gehäuseschlitze stecken, da spannungsführende Teile beruhrt oder Kurzschlüsse verursacht werden könnten.
- Keine Zubehörteile installieren, die nicht für diesen Monitor geeignet sind.
- bei Gewitter oder wenn Sie den Monitor für längere Zeit nicht benutzen, das Netzkabel aus der Steckdose ziehen.
- keine magnetisch aufgeladenen Gegenstände wie permanent-magneten oder Motoren id die Nähe des Bildschirms bringen.

Zur Installation

Stellen Sie keine Gegenstände auf das Netzkabel. Plazieren Sie den Monitor so, dass das Netzkabel auf keinen Fall beschädigt werden kann.

Betreiben Sie den Monitor nicht in der Nähe von Wasser (Waschbecken etc.) bzw. in Räumen mit überdurchschnittlich hoher Luftfeuchte.

Die Schlitze im Monitorgehäuse dienen der Belüftung des Geräts.
Diese Öffnungen dürfen auf keinen Fall blockiert oder vedeckt werden, da sie den Monitor vor Überhitzung schützen und einen störungsfreien Betrieb des Geräts garantieren. Um die Gefahr eines Brandes weitgehend auszuschliessen, sollten Sie deshalb:

- den Monitor niemals auf eine weiche Unterlage stellen, da auf diese Weise die Belüftungsschlitze an der Gehäuseunterseite blockiert werden.
- den Monitor nicht eingebaut betreiben, sofern nicht für eine ausreichende Belüftung gesorgt ist.
- die Belüftungsschlitze des Monitors auf keinen Fall mit einer Textil- oder sonstigen Abdeckung blockieren
- den Monitor nicht in die Nähe einer Heizung oder auf einen Heizkörper stellen.

Nur LCD-Monitor

Das Aktivmatrix-LCD nicht mit etwas härterem als HB reiben oder schlagen, da das das Aktivmatrixdisplay dauerhaft verkratzen oder beschädigen kann.

Nicht mit Ihrem Finger für längere Zeit auf den LCD-Bildschirm drücken, da das Schattenbilder hervorrufen kann.

Einige Punktdefekte können auf dem Bildschirm erscheinen. Das können rote, grüne oder blaue Stellen auf dem Bildschirm sein. Das hat jedoch keinen Einfluß auf die Leistungsfähigkeit des Bildschirms.

Verwenden Sie, wenn möglich, die empfohlene Auflösung, um die bestmögliche Bildqualität für den LCD-Monitor zu erzielen. Bei Verwendung anderer Modi als die empfohlene Auflösung können einige skalierte oder verarbeitete Bilder auf dem Bildschirm erscheinen . Hierbei handelt es sich jedoch um die Eigenschaften der LCD-Anzeige mit einer festen Auflösung.

Zur Reinigung

- Ziehen Sie das Netzkabel des Monitors, bevor Sie die Vorderseite des Bildschirms reinigen.
- Verwenden Sie ein leicht feuchtes (kein nasses) Tuch. Sprühen Sie ein Spray niemals direkt auf den Bildschirm, da zuviel Spray einen elektrischen Schock verursachen kann.

Zur Verpackung

- Das Verpackungsmaterial des Monitors sollte aufbewahrt werden, um das Gerät gegebenenfalls lagern, transportieren oder versenden zu können. Beispielsweise sollte der Monitor im Falle einer Störung wie auf dem Karton dargestellt ausschliesslich in der Originalverpackung zur Reparatur zurückgeschickt werden.

DDC (Display Data Channel)

DDC ist ein Kommunikationskanal, über weiche Sie von Ihrem Monitor automatisch über das verbundene System (PC) und seine Fähigkeiten informiert werden.

DDC Protokoll

① DDC1/DDC2B
Ein unidirektionaler Kommunikationskanal.
② DDC 2AB/DDC2B+/DDC2Bi
Ein bidirektionaler Kommunikationskanal.

Anmerkung

- *Der PC muß für DDC Funktionen eingerichtet sein.*

Energieversorgung

Dieser Monitor entspricht den Richtlinien des EPA Energy Star Program. Er beinhaltet neuartige Schaltungen, um den Energiever-brauch wahrend der Nichtbennutzung zu verringern.

Wird dieser Monitor mit einem grünen oder EPA Energy Star-PC oder einem PC mit einer Software verwendet, die den Bildschirm gemäß des VESA Display Power Management Signaling (DPMS)–Protokolls abschaltet, läßt sich eine beträchtliche Energiemenge sparen, indem der Stromverbrauch bei Inaktivität gesenkt wird.

Es gibt 2 Signalreihen und 4 Betriebsmodi.
; Normal, Standby, Bereitschaft und Aus.

Modus	Hori Sync.	Vert. Sync.	LED Farbe
Normal(Max.)	Ein	Ein	Grün
Standby	Aus	Ein	Gelb
Bereitschaft	Ein	Aus	Gelb
Aus	Aus	Aus	Gelb

Wenn Sie den PC durch Drücken einer Taste oder Bewegen der Maus wieder aktivieren, wird der Monitor ebenfalls in den Normalmodus umgeschaltet, was durch die grüne Netz-LED angezeigt wird.

Hinweis

- *Die Energiesparfunktion für Monitore kann nur bei Anschluß an Computern verwendet werden, die ebenfalls Energiesparfunktionen unterstützen*

Wartung

Bei folgenden Fehlerbedingungen ist der Netzstecker des Monitors zu ziehen und der Kundendienst zu benachrichtigen:

- Wenn der Netzstecker beschadigt oder das Netzkabel ausgefranst ist.
- Wenn Flussigkeit in den Monitor gelaufen ist.
- Wenn der Monitor Regen oder Feuchtigkeit ausgesetzt worden ist.
- Wenn der Monitor trotz Befolgung aller Bedienungsanweisungen nicht ordnungsgemass arbeitet. Benutzen Sie ausschliesslich die Bedienelemente, die in den Hinweisen dieses Handbuchs beschrieben werden. Werden andere Bedienelemente geandert oder verstellt, konnen Schaden entstehen, die nur von einem qualifizierten Service-Techniker behoben werden konnen.
- Wenn der Monitor fallengelassen und das Gehause beschadigt wurde.
- Wenn beim Betrieb des Monitors haufig oder lang anhaltend knackende oder knallende Nebengerausche auftreten. Hiermit sind nicht die typischen Gerausche gemeint, die beim Ein- oder Ausschalten des Monitors zu horen sind.

Fuhren Sie keine Wartungsarbeiten selbst durch. Durch Offnen oder Entfernen wichtiger Abdeckungen werden spannungsfuhrende Teile freigelegt, so dass eine erhohte Gefahrdung besteht. Fur Wartungsarbeiten in diesen Bereichen ist der Kundendienst zustandig.

Consignes de Sécurité

Cet appareil a été conçu et fabriqué de façon à vous garantir une sécurité optimale, mais une utilisation inadéquate peut entraîner des risques de décharges électriques ou d'incendie. Afin de conserver intacts les dispositifs de sécurité incorporés à ce moniteur, nous vous recommandons de respecter les règles de base suivantes concernant son installation, son utilisation et sa maintenance, ainsi que les avertissements et consignes apposés directement sur votre moniteur.

Pour Votre Sécurité

Utilisez uniquement le cordon d'alimentation fourni avec votre moniteur. Si vous utilisez un autre cordon d'alimentation, au cas où le fournisseur n'en aurait pas procuré, assurez-vous qu'il est conforme aux normes nationales en vigueur.Si le câble d'alimentation est défectueux, adressez-vous au fabricant ou au plus proche mainteneur agréé afin de le changer.

N'utilisez, pour l'utilisation de votre moniteur, que la source d'alimentation indiquée dans les spécifications techniques de ce manuel ou directement sur le moniteur. Si vous n'êtes pas sûr de votre type de source d'alimentation, demandez conseil à votre distributeur.

Il est dangereux de surcharger les prises secteur et les rallonges. Les cordons secteur dénudés et les prises cassées présentent également un danger. Ils peuvent entraîner des décharges électriques ou un incendie. Si tel est le cas de vos prises ou cordons secteur, demandez à votre technicien de maintenance de vous les remplacer.

N'ouvrez Pas le Moniteur.
- I ne contient pas d'éléments utiles à l'utilisateur pour le fonctionnement de l'appareil.
- Il contient en revanche une haute tension dangereuse, même lorsque le moniteur est à l'arrêt.
- S'il ne fonctionne pas normalement, contactez votre distributeur.

Pour Votre Sécurité Personnelle, Respectez les Consignes Suivantes :
- Ne placez pas le moniteur su r une surface inclinée, à moins de l'avoir solidement fixé.
- Ne l'installez que sur les supports recommandés par le fabricant.
- Ne tentez pas de le déplacer sur une table roulante avec des pas de porte à franchir ou des tapis épais.

Pour éviter les risques d'incendie ou de décharges électriques :
- Veillez à mettre votre moniteur en position d'arrêt si vous quittez la pièce plus d'un court moment. Ne laissez jamais le moniteur en position de marche lorsque vous partez.
- Ne laissez pas des enfants faire tomber ou enfoncer des objets dans les ouvertures du boîtier de votre moniteur. Certaines pièces internes ont une haute tension dangereuse.
- N'ajoutez pas d'accessoires qui n'auraient pas été conçus pour ce moniteur.
- En cas d'orage, ou si vous ne vous servez pas du moniteur pen dant une période prolongée, débranchez la prise murale.
- N'approchez pas d'appareils magnétiques tels que des aimants ou des moteurs électriques à proximité du tube-image.

Consignes D'installation

Ne placez aucun objet sur le cordon d'alimentation, et ne placez pas le moniteur à un endroit où le cordon d'alimentation risque d'être endommagé.

Ne placez pas le moniteur à proximité d'endroits humides, par exemple baignoire, lavabo, évier de cuisine, machine à laver, dans un sous-sol humide ou à proximité d'une piscine.

Les moniteurs sont équipés d'ouvertures de ventilation dans le boîtier, qui lui permettent d'évacuer la chaleur générée par le fonctionnement de l'appareil. Si ces ouvertures sont obturées, l'accumulation de chaleur peut provoquer des défaillances allant jusqu'au risque d'incendie. Par conséquent, ne JAMAIS:
- obturer les trous de ventilation en plaçant le moniteur sur un lit, un canapé, une couverture, etc.
- placer le moniteur sur un support encastré si l'aération requise n'est pas assurée.
- recouvrir les ouvertures d'une étoffe ou de tout autre matière.
- placer le moniteur à proximité ou au dessus d'un radiateur ou d'une source de chaleur.

Moniteur LCD (à affichage à cristaux liquides) uniquement

Ne passez pas un produit ou objet dur sur l'écran à cristaux liquides à matrice active et ne heurtez pas ce dernier avec un produit similaire, car cela risquerait de rayer, d'abîmer ou d'endommager de façon permanente cet écran.

N'appuyez pas pendant longtemps avec les doigts sur l'écran à cristaux liquides car cela risquerait de provoquer l'apparition d'images fantômes.

Certains défauts ponctuels peuvent apparaître sur l'écran. Des points rouges, verts ou bleus peuvent ainsi faire leur apparition. Cependant, cela n'a aucun impact ou effet sur les performances du moniteur.

Dans la mesure du possible, utilisez la résolution recommandée pour obtenir une qualité d'image optimale sur votre moniteur LCD. Si vous l'utilisez dans d'autres modes que la résolution conseillée, certaines images affichées peuvent être mises à l'échelle ou subir un traitement particulier. Ce sont des caractéristiques propres à l'écran LCD, dont la résolution est fixe.

Consignes de Nettoyage

- Débranchez le moniteur avant de nettoyer l'écran.
- Utilisez un chiffon légèrement humide (mais pas mouillé). Ne projetez jamais de produit en aérosol directement sur le moniteur car les éclaboussures pourraient provoquer un court-circuit.

Consignes de Transport

- Ne jetez pas le carton et l'emballage d'origine de votre moniteur. Ils peuvent vous servir pour le transport de l'appareil, ils sont par faitement indiqués en cas de déplacement du moniteur vers un autre site.

DDC (Display Data Channel)

DDC est une chaine de communication par le biais de laquelle le moniteur prévient automatiquement le systéme central (PC) de ces capacités.

Protocole DDC

① DDC1/DDC2B
Canal de communication unidirectionnel.

② DDC 2AB/DDC2B+/DDC2Bi
Canal de communication bidirectionnel.

Remarque

- *Le PC doit posséder les fonctions DDC pour cela.*

Caractéristique D'économie D'énergie

Ce moniteur a été conçu en conformité avec le programme Energy Star de l'EPA, qui est un programme destiné aux fabricants d'équipement informatique, les incitant à construire des systèmes internes de réduction de la consommation pendant les périodes de non-utilisation.

Lorsque ce moniteur est connecté à un PC ayant le label Green ou EPA Energy Star, ou utilisant un économiseur d'écran compatible avec le protocole VESA DPMS (Display Power Management Signalling), le moniteur permet de réaliser une économie d'énergie importante en réduisant la consommation électrique lorsqu'il n'est pas utilisé.

Il y a 2 lignes de signaux et 4 modes de fonctionnement : Normal, Standby (Attente), Suspend (Suspens) et Off (Désactivé).

Mode	Sync Hori.	Sync Verti.	Couleur du Voyante DEL
Normal(Max.)	On	On	Vert
Standby	Off	On	Ambre
Suspend	On	Off	Ambre
Off	Off	Off	Ambre

Lorsque vous réactivez votre PC en appuyant sur une touche ou en déplaçant la souris, le moniteur revient également à son mode de fonctionnement normal, signalé par l'allumage du voyant vert d'alimentation.

Remarque

- *La fonction d'économie d'énergie des moniteurs ne peut être activée que si le moniteur est connecté à un ordinateur prenant en charge l'économie d'énergie.*

Maintenance du Moniteur

Débranchez le moniteur (prise murale) et contactez un technicien qualifié de maintenance de ce type d'équipement dans les cas suivants:

- Le cordon d'alimentation ou la prise est endommagé(e) ou dénudé.
- Du liquide a coulé à l'intérieur du moniteur.
- Le moniteur a été exposé à la pluie ou à l'humidité.
- Le moniteur ne fonctionne pas normalement lorsque vous suiv ez les instructions du mode d'emploi. Ne réglez que les éléments décrits dans le mode d'emploi. Un Réglage indadapté d'autres éléments peut entraîner une détérioration de l'appareil et nécessite souvent un important travail du technicien qualifié pour remet tre le moniteur en bon état de fonctionnement.
- Le moniteur est tombé ou son boîtier a été endommagé.
- Le moniteur présente un changement net dans ses capacités de fonctionnement.
- Des bruits secs ou des bruits d'encliquetage 'clic' se font enten dre en continu ou fréquemment en cours de fonctionnement du moniteur. Il est normal que certains moniteurs fassent des bruits occasionnels lorsqu'ils sont mis sous tension ou hors tension, ou lors de changements de mode vidéo.

Ne tentez pas de réparer vous-même votre moniteur, car ouvrir le moniteur ou retirer son boîtier peut vous exposer à des décharges électriques dangereuses et présente par ailleurs d'autres risques. Pour toute réparation du moniteur, contactez un technicien qualifié.

Precauzioni Importanti

Questa unità è stata progettata e realizzata per garantire la massima sicurezza personale dell'utente, tuttavia un uso improprio potenzialmente potrebbe comunque provocare una scarica elettrica o un incendio. Al fine di non alterare i dispositivi di sicurezza incorporati nel monitor, osservare le seguenti norme basilari per l'istallazione, l'uso e la manutenzione. Seguire inoltre tutte le avvertenze e le istruzioni riportate direttamente sul monitor.

Per la Sicurezza

Utilizzare unicamente il cavo d'alimentazione fornito insieme all'unità. Se si utilizza un altro cavo di alimentazione, non fornito dal rivenditore, assicurarsi che sia conforme agli standard in vigore nella propria nazione. Se il cavo di alimentazione è difettoso, contattare il produttore oppure il più vicino fornitore autorizzato alla sostituzione.

Mettere in funzione il monitor collegandolo unicamente ad una delle fonti elettriche indicate nelle specifiche di questo manuale o elencate sul monitor stesso. Se non si è certi del voltaggio della corrente delle prese a cui si dovrebbe collegare l'apparecchio, consultarsi prima con un tecnico.

Le prese di corrente sovraccaricate e le prolunghe elettriche sono pericolose. Altrettanto vale per i cavi d'alimentazione danneggiati e per le spine consumate. Questi elementi possono provocare scariche elettriche o incendi. Rivolgersi ad un tecnico della manutenzione per richiederne la sostituzione.

Non Aprire il Monitor.

- All'interno non vi sono componenti che possono essere puliti o sostituiti dallutente.
- Vi è comunque il pericolo di scariche elettriche all'interno, anche quando l'apparecchio è spento.
- Contattare il proprio negoziante se il monitor non funziona correttamente.

Per Evitare il Rischio di Danni Alla Persona:

- Non posizionare il monitor su scaffalature inclinate, a meno che non siano state opportunamente regolate e fissate.
- Utilizzare unicamente la base di appoggio consigliata dal produttore.
- Non cercare di trascinare la base di appoggio lungo pavimenti irregolari o tappeti a pelo alto.

Per Evitare il Rischio di Incendi o Pericoli:

- Spegnere sempre il monitor quando si lascia la stanza per un periodo lungo. Non lasciare mai acceso il monitor quando si esce di casa.
- Impedire ai bambini di lasciar cadere o infilare oggetti nelle fes sure della struttura del monitor. Alcune parti interne possono provocare scariche elettriche.
- Non aggiungere accessori che non siano stati specificamente disegnati per questo monitor.
- In caso di temporale, o comunque quando non c'è nessuno che possa controllare il monitor per un lungo periodo di tempo, stac care la spina dalla presa del muro.
- Non avvicinare oggetti magnetici, quali calamite o motori, al tubo catodico.

Per l'istallazione

Non appoggiare né far rotolare nulla sul cavo di alimentazione, inoltre non posizionare il monitor dove il cavo di alimentazione potrebbe essere soggetto danni.

Non utilizzare questo monitor in prossimità dell'acqua, per esempio vicino a vasche da bagno, lavandini, lavelli, vasche da bucato, superfici bagnate o vicino a una piscina.

La struttura dei monitor è dotata di fessure di ventilazione che consentono la fuoriuscita del calore generato durante il funzionamento. Se queste fessure restano bloccate, il calore imprigionato causa danni che potrebbero provocare incendi. Dunque non bisogna MAI:

- Bloccare le fessure di ventilazione inferiori posizionando il moni tor su letti, divani, tappeti, ecc.
- Posizionare il monitor in uno scomparto chiuso a meno che non si possa garantire un'adeguata ventilazione.
- Coprire le fessure con tessuto o altro materiale.
- Posizionare il monitor in prossimità di un termosifone o sopra di esso o comunque vicino ad una fonte di calore.

Solo per monitor LCD

Non strofinare né percuotere il Display a Cristalli Liquidi Active Matrix con oggetti duri (più duri di HB), altrimenti si rischia di graffiare, compromettere o danneggiare permanentemente il Display a Cristalli Liquidi Active Matrix.

Non fare pressione a lungo sullo schermo del display a cristalli liquidi con i polpastrelli, altrimenti si potranno avere immagini residue.

Su schermo potranno apparire difetti puntiformi, come puntini di colore rosso, verde o blu. Questo non avrà tuttavia alcun effetto o ripercussione negativa sulle prestazioni del monitor.

Se possibile, utilizzare la risoluzione consigliata per ottenere la migliore qualità dell'immagine sul vostro monitor LCD. Nel caso si utilizzino modalità diverse da quella consigliata, alcune immagini potrebbero apparire processate o scalate. In ogni caso, queste sono le caratteristiche del pannello LCD a risoluzione fissa.

Per la Pulizia

- Scollegare il monitor prima di pulire lo schermo.
- Utilizzare un panno leggermente inumidito (non bagnato). Se si usano prodotti spray, non spruzzare il prodotto direttamente sullo schermo del monitor perché una quantità eccessiva potrebbe causare scosse elettriche.

Per l'imballaggio

- Non getti via la scatola di cartone e i materiali di imballaggio. Sono il contenitore ideale per trasportare l'apparecchio. Quando lo trasferisce in un altro posto, lo reimballi nel suo materiale originale.
- Utilizzare uno panno leggermente umido (non bagnato). Non uti lizzare nebulizzatori direttamente sul tubo catodico perché la vaporizzazione potrebbe provocare scariche elettriche.

DDC (Display Data Channel)

Il DDC è un canale di comunicazione attraverso il quale il monitor informa automaticamente il sistema ospite (PC) circa le proprie capacità.

Protocollo DDC

① DDC1/DDC2B
Un canale di comunicazione uni-direzionale.

① DDC 2AB/DDC2B+/DDC2Bi
Un canale di comunicazione bi-direzionale.

Nota

- *Per fare questo il PC deve supportare le funzioni DDC.*

Modello Conforme alla Normativa sul Risparmio Energetico

Questo monitor è conforme al programma Energy Star dell'EPA, che è stato messo a punto affinché le case produttrici di computer realizzino macchine dotate di un circuito inteso a ridurre il consumo energetico durante i tempi di non utilizzo.

Quando si utilizza il monitor insieme a un personal computer conforme agli standard Green o EPA Energy Star, oppure con un PC dotato di software di soppressione di sfondo conforme al protocollo VESA per Display Power Management Signalling (DPMS), il monitor può conservare una grande quantità di energia riducendone il consumo durante i periodi di non utilizzo.

Vi sono 2 linee di segnale e 4 modalità operative.
; Normale, Standby, Sospensione e Spento.

Modalità	Sinc. Oriz.	Sinc. Vert.	Colore LED
Normal	On	On	Verde
Stand by	Off	On	Giallo
Sospensione	On	Off	Giallo
Spento	Off	Off	Giallo

Quando si riattiva il PC premendo un tasto o muovendo il mouse, il monitor tornerà alla modalità operativa normale, indicata dalla luce verde del led di alimentazione.

Nota

- *La funzionalità di risparmio energetico per i monitor è disponibile solo su monitor connessi a computer a risparmio energetico.*

Manutenzione

Staccare il monitor dalla presa elettrica e consultare il personale addetto alla manutenzione quando:

- Il cavo elettrico o la spina sono danneggiati o consumati.
- Si è rovesciato del liquido sul monitor.
- Il monitor è stato esposto alla pioggia o all'acqua.
- Il monitor non funziona correttamente secondo le istruzioni oper ative. Regolare unicamente quei controlli contemplati nelle istruzioni operative. La manomissione di altri controlli può provo care danni e spesso poi è necessario un lungo lavoro da parte dei tecnici specializzati per ripristinare le normali funzionalità del monitor.
- Il monitor è caduto o si è danneggiata la struttura.
- Il monitor funziona in maniera evidentemente diversa da prima.vIl monitor lampeggia in maniera continua o frequente mentre è in funzione. E' normale che alcuni monitor emettano suoni occa sionali quando vengono accesi o spenti, oppure quando si cam bia la modalità video.

Non cercare di effettuare da soli la manutenzione poiché l'apertura della struttura potrebbe esporre l'utente al pericolo di scariche elettriche o ad altri rischi. Rivolgersi al personale tecnico qualificato.

Precauciones Importantes

Esta unidad ha sido diseñada y fabricada para asegurar su seguridad personal, pero el uso indebido puede resultar en sacudidas elétricas potenciales o en peligro de incendio. Para no destruir los dispositivos de seguridad en este monitor, observe las siguientes reglas básicas para su instalación, uso y servicio. También siga todas las advertencias e instrucciones marcadas directamente en su monitor.

En Cuanto a Seguridad

Utilice únicamente el cable de energía proporcionado con esta unidad. En caso de utilizar otro cable de alimentación, compruebe que está certificado por los estándares nacionales aplicables, si esta información no ha sido facilitada por el proveedor. Si el cable de alimentación de corriente tiene algún fallo, póngase en contacto con el fabricante o con el distribuidor autorizado más cercano para cambiarlo.

Opere el monitor únicamente de una fuente de energía indicada en las especificaciones de este manual o listado en el monitor. Si usted no está seguro del tipo de fuente de energía que tiene en su hogar, consulte con su distribuidor.

Las salidas de corriente alterna (AC) sobrecargadas y las extensiones de los cables son peligrosas. También lo son los cables de energía desgastados y los enchufes rotos. Ello puede resultar en una sacudida eléctrica o en un peligro de incendio. Llame a su técnico de servicio para su reemplazo.

No abra el monitor.
- No hay componentes adentro que se puedan utilizar.
- Hay Voltaje de Alto Peligro en el interior, aún cuando la energía está apagada.
- Contacte a su distribuidor si el monitor no está operando adecuadamente.

Para Evitar Lesión Personal**:**
- No coloque el monitor en una repisa inclinada, al menos que esté apropiadamente asegurda.
- Utilice únicamente un mueble recomendado por el fabricante.
- No trate de rodar el mueble con ruedecillas a través de umbrales o alfombras gruesas.

Para Prevenir Incendio o Riesgos:
- Simpre apague el monitor si usted deja la habitación por más de un período corto de tiempo. Nunca deje su monitor encendido cuando salga de la casa.
- Evite que los niños dejen caer o metan objetos dentro de las ranuras del gabinete del monitor. algunas piezas internas tienen voltajes peligrosos.
- No adicione accesorios que no han sido diseñadas para este monitor.
- Durante una tomenta eléctrica o cuando el monitor no se va a utilizar, por un período extendido de tiempo, desconéctelo del tomacorriente. motores cerca del tubo de imagen.
- No coloque dispositivos magnéticos tales como imanes o motores cerca del tubo de imagen.

Sobre la Instalación

No permita que nada descanse encima o ruede sobre el cable, y no coloque el monitor donde el cable de energía pueda causar daño.

No use este monitor cerca del agua o cerca de una bañera, lavamanos, fregador de cocina, fregador de ropa o en un sótano húmedo, o cerca de una piscina.

Los monitores tienen ranuras de ventilación en su gabinete para permitir la liberación de calor generada durante su operación. Si estas ranuras se bloquean, el calor en aumento puede causar fallas que pueden resultar en peligro de incendio. Por lo tanto, NUNCA:
- Bloquee las ranuras inferiores colocando el monitor en una cama, sofá, alfombra, etc.
- Coloque el monitor en un área empotrada a no ser que haya una ventilación adecuada.
- Cubra las ranuras con telas u otros materiales.
- Coloque el monitor cerca o sobre un radiador o fuente de calor.

Monitor LCD exclusivamente

No frote o golpee el LCD de Matriz Activa con algo que sea duro (más de H) ya que podría rayar, estropear o dañar con carácter permanente LCD de Matriz Activa.

No apriete la pantalla de LCD con los dedos durante un largo tiempo, ya que ello podría producir alguna imagen posterior.

Pueden aparecer en la pantalla algunos defectos de puntos, en los puntos rojo, verde o azul de la pantalla. No obstante, esto no tendría impacto o efecto en el rendimiento del monitor.

Si es posible, utilice la resolución recomendada para obtener la mejor calidad de imagen en su monitor LCD. Si utiliza cualquier otro modo, pueden aparecer imágenes escaladas o procesadas en pantalla. Esta es una característica del panel LCD, que tiene una resolución fija.

Sobre la Limpieza

- Antes de limpiar la superficie de la pantalla, desconecte el monitor.
- Utilice un paño ligéramente húmedo (no empapado.) No utilice un aerosol directamente sobre la pantalla del monitor porque un exceso de pulverización puede provocar una descarga eléctrica.

Sobre el Reempaque

- No bote la caja y los materiales de empaque. Son ideales para transportar la unidad. Cuando embarque la unidad a otra ubicación, reempáquelo en su material original.

DDC (Canal de despliegue de información)

DDC es un canal de comunicación sobre el cual el monitor automáticamente informa al sistema anfitrión (PC) sobre sus capacidades.

Protocolo DDC
① DDC1/DDC2B
Un canal de comunicación unidireccional.
② DDC 2AB/DDC2B+/DDC2Bi
Un canal de comunicación bidireccional.

Nota
- La PC debe soportar las funciones DDC para poder hacer esto.

Espanõl

Diseño de Ahorro de Energía

Este monitor cumple con el programa EPA'S Energy Star el cual es un programa diseñado para que fabricantes de equipo de computadora fabriquen sistema de circuitos en sus productos para reducir el consumo de energía durante el tiempo que no está en uso el equipo.

Si este monitor se utiliza con un PC Green o EPA Energy Star, o con un PC con software de blanqueo de pantalla que siga el protocolo VESA Display Power Management Signalling (DPMS), ahorrará mucha energía al reducir el consumo cuando está encendido pero no se usa.

Hay 2 líneas de señal, 4 modos de operación.
; Normal, Espera (Standby), Suspendido y Apagado.

Modo	Hori. Sinc.	Sinc. Vert.	Color LED
Normal	Encendido	Encendido	Verde
En espera	Apagado	Encendido	Ambar
Suspendido	Encendido	Apagado	Ambar
Apagado	Apagado	Apagado	Ambar

Si activa de nuevo el PC pulsando una tecla o moviendo el mouse, el monitor también recuperará su modo de operación normal y se iluminará el indicador LED de encendido de color verde.

Nota

- *La característica de ahorro de energía de los monitores sólo funciona cuando están conectados a equipos que también tienen la característica de ahorro de energía.*

Servicio

Desconecte el monitor del tomacorriente de la pared y refiera el servicio a personal de servicio calificado cuando:

- El cable o enchufe de energía está dañado o desgastado.
- Se ha derramado líquido en el monitor.
- El monitor ha sido expuesto a la lluvia o al agua.
- El monitor no funciona normal aunque se hayan seguido las instrucciones de operación. Ajuste sólo los controles que están cubiertos en las instrucciones de operación. Un ajuste incorrecto de estos controles pueden causar daño y a veces requiere de trabajo extenso por un técnico calificado para restaurar el monitor al funcionamiento normal.
- El monitor se ha dejado caer o el gabinete se ha dañado.
- El monitor exhibe un cambio distinto en la ejecución.
- Los chasquidos o explosivos que emanan del monitor son continuos o frecuentes mientras el monitor está operando. Los ruidos ocasionales son normales para algunos monitores cuando se prende o se apaga, o cambia el modo de video.

No trate de arreglar usted mismo el monitor, ya que abrir y sacar las tapas pueden exponerlo a niveles de voltaje peligrosos u otros peligros. Refiera el arreglo a un personal técnico calificado para ello.

Nederlands

Belangrijke voorzorgsmaatregelen

Dit apparaat is zodanig ontworpen en geproduceerd dat uw persoonlijke veiligheid is gewaarborgd. Bij onjuist gebruik bestaat er echter gevaar voor elektrische schokken of brand. Als u onderstaande basisregels voor het installeren, gebruiken en onderhouden van de monitor in acht neemt, blijven de veiligheidsvoorzieningen van deze monitor goed functioneren. Neem ook alle waarschuwingen en aanwijzingen die rechtstreeks op uw monitor verschijnen, in acht.

Veiligheid

Gebruik het netsnoer dat bij dit apparaat is meegeleverd. Mocht u een ander netsnoer gebruiken, dat niet door de leverancier van de monitor is geleverd, zorg dan dat het snoer is goedgekeurd volgens de van toepassing zijnde nationale normen. Als het netsnoer op enigerlei wijze is beschadigd, neem dan contact op met de fabrikant of met het dichtstbijzijnde erkende servicepunt voor vervanging van het snoer.

Sluit de monitor uitsluitend aan op een spanningsbron zoals vermeld bij de specificaties in deze handleiding of op de monitor. Als u niet weet welk type stroomvoorziening u in uw huis gebruikt, raadpleeg dan uw dealer.

Overbelaste stopcontacten en verlengsnoeren zijn gevaarlijk. Dat geldt ook voor versleten snoeren en gebroken stekkers. Elektrische schokken en brand kunnen het gevolg zijn.
Neem contact op met uw onderhoudsmonteur voor vervanging.

Maak de monitor niet open

- In de monitor bevinden zich geen onderdelen die door de gebruiker kunnen worden onderhouden.
- In de monitor bevinden zich gevaarlijke, hoge elektrische spanningen, zelfs wanneer de stroom is uitgeschakeld.
- Neem contact op met uw dealer, wanneer de monitor niet naar behoren functioneert.

Voorkom persoonlijk letsel:

- Zet de monitor niet op een hellende plank, tenzij u de monitor goed hebt vastgezet.
- Gebruik alleen een monitorvoet die door de fabrikant wordt aanbevolen.
- Rol een monitorvoet die voorzien is van kleine wieltjes, niet over drempels of over hoogpolig tapijt.

Voorkom brand of onveilige situaties:

- Zet de monitor altijd uit als u de ruimte voor meer dan een korte tijd verlaat. Laat de monitor nooit aanstaan als u het pand verlaat.
- Zorg ervoor dat kinderen niets in de monitorbehuizing kunnen laten vallen of naar binnen kunnen duwen. Sommige interne onderdelen zijn namelijk geladen met gevaarlijk hoge spanningen.
- Gebruik geen accessoires die niet voor deze monitor zijn ontworpen.
- Haal de stekker uit het stopcontact als het onweert of als u de monitor voor langere tijd onbeheerd laat.
- Zet geen magnetisch geladen voorwerpen zoals magneten of motoren in de buurt van de beeldbuis.

Installeren

Zorg dat er niets op het netsnoer wordt geplaatst of er over heen wordt gerold en zet de monitor niet op een plaats waar het netsnoer makkelijk kan worden beschadigd.

Gebruik deze monitor niet in de buurt van water, zoals bij een badkuip, gootsteen of wasteil, in een natte kelderruimte of in de buurt van een zwembad.

De monitorbehuizing is voorzien van ventilatieopeningen om de warmte die door de monitor wordt geproduceerd, kwijt te kunnen raken. Als deze openingen worden geblokkeerd, kan de opgehoopte warmte brandgevaarlijke storingen veroorzaken. Neem daarom de volgende voorschriften in acht:

- Zet de monitor nooit op een bed, sofa, kleed enz., omdat dan de onderste ventilatieopeningen worden geblokkeerd.
- Zet de monitor nooit in een ombouw, tenzij er maatregelen zijn getroffen om een goede ventilatie te waarborgen.
- Dek de openingen nooit af met een doek of met ander materiaal.
- Zet de monitor nooit in de buurt van of boven een radiator of een andere warmtebron.

Alleen LCD-monitor

Wrijf of veeg niet met een hard voorwerp over de actieve-matrix LCD, want hierdoor kunnen niet meer te verwijderen krassen of beschadigingen aan de actieve-matrix LCD ontstaan.

Druk niet gedurende langere tijd met uw vinger tegen het LCD-scherm, omdat dit nabeelden kan veroorzaken.

Er kunnen een aantal foutpuntjes op het scherm verschijnen, zoals rode, groene of blauwe vlekjes op het scherm. Dit is echter niet van invloed op de prestaties van de monitor. Dit is kenmerkend voor LCD-schermen met een vaste resolutie.

Gebruik indien mogelijk de aanbevolen resolutie. Zo bent u er zeker van dat de LCD-monitor de beste beeldkwaliteit biedt. Als u een andere dan de aanbevolen resolutie gebruikt, kunnen sommige afbeeldingen op een gewijzigde grootte of anderszins bewerkt worden afgebeeld. Dit is kenmerkend voor LCD-schermen met een vaste resolutie.

Reinigen

- Haal de stekker van de monitor uit het stopcontact voordat u het monitorscherm schoonmaakt.
- Gebruik een vochtige (geen natte) doek. Spuit schoonmaakmiddelen nooit direct op de monitor, dit kan een elektrische schok veroorzaken.

Inpakken

- Gooi het karton en het verpakkingsmateriaal niet weg. Deze materialen zijn uitstekend te gebruiken als u de monitor nog eens moet vervoeren. Wanneer u de monitor naar een andere locatie overbrengt, verpak het dan in het originele verpakkingsmateriaal.

DDC (Display Data Channel)

DDC is een communicatiekanaal waarmee de monitor het host-systeem (PC) automatisch informeert over zijn mogelijkheden.

DDC-protocol

① DDC1/DDC2B
Een unidirectioneel communicatiekanaal.

② DDC 2AB/DDC2B+/DDC2Bi
Een bidirectioneel communicatiekanaal.

OPMERKING

- *Dit kan alleen als de PC DDC ondersteunt.*

Energiebesparingssysteem

Deze monitor voldoet aan het Energy Star-programma van EPA. Dit programma is bedoeld om fabrikanten van computerapparatuur zo ver te krijgen elektronica in hun producten op te nemen die ervoor zorgt dat het energieverbruik wordt teruggedrongen op momenten dat de apparatuur niet wordt gebruikt.

Wanneer u deze monitor gebruikt in combinatie met een energiezuinige pc, een pc die voldoet aan de EPA Energy Star-norm of schermsoftware die werkt met het DPMS-protocol (Display Power Management Signalling) van VESA, kan het energiegebruik van deze monitor flink worden gereduceerd.

Er zijn twee signaallijnen en vier gebruiksmodi:
; Normal, Standby, Onderbroken en Uit.

Modi	Hor. Sync	Vert Sync	Indicator
Normaal	Aan	Aan	Green
Stand-by	Uit	Aan	Amber
Onderbroken	Aan	Uit	Amber
Uit	Uit	Uit	Amber

Wanneer u de pc activeert door op een toets te drukken of de muis te bewegen, wordt de normale gebruiksmodus van de monitor ook hersteld. Dit wordt aangegeven door de groene LED-indicatie van de Aan/Uit-schakelaar.

Opmerking

- *De energiesparende functie van de monitor werkt alleen als de computer waar hij op is aangesloten ook een energiebesparende functie heeft.*

Onderhoud

In de volgende gevallen haalt u de stekker van de monitor uit het stopcontact en roept u de hulp in van een gekwalificeerde technicus:

- Het netsnoer of de stekker is beschadigd of versleten.
- Er is vloeistof in de monitor gemorst.
- De monitor heeft blootgestaan aan regen of water.
- De monitor werk niet goed, ondanks het feit dat u handelt volgens de gebruiksaanwijzing. Beperk u bij het instellen van de monitor tot de items die in de gebruiksaanwijzing worden besproken. Het onjuist instellen van andere items kan storingen veroorzaken. Vaak is dan een omvangrijke reparatie door een gekwalificeerde technicus nodig, om de monitor weer voor normaal gebruik in gereedheid te brengen.
- De monitor is gevallen of de behuizing is beschadigd.
- De monitor functioneert wezenlijk anders dan normaal het geval is.
- De monitor produceert voortdurend of regelmatig kraak- en knalgeluiden. Bij sommige monitoren is het normaal dat ze af en toe geluiden produceren bij het in- en uitschakelen, of wanneer ze veranderen van videomodus.

Probeer de monitor niet zelf te repareren, aangezien u bij het openen of verwijderen van de behuizing blootgesteld kunt worden aan gevaarlijke elektrische schokken of andere gevaren. Laat alle reparatiewerkzaamheden over aan gekwalificeerde technici.

Precauções Importantes

Este monitor foi projetado e fabricado de forma a assegurar a sua segurança pessoal, porém o uso ou operação inadequada podem resultar em risco potencial de incêndio ou choque elétrico. Além disso, o não cumprimento destas regras podem invalidar a garantia.

Na Segurano

Use somente o cabo de força fornecido pelo monitor. Em caso de necessitar outro cabo de força, certifique-se que o mesmo suporta os níveis de tensão e corrente exigidos pelo monitor(veja item especificações).

Se o cabo de alimentação tiver algum defeito, entre em contacto com o fabricante ou com o fornecedor de serviços de reparação da sua zona para o substituir.

Ligue o monitor somente em tomadas com a mesma especificação de tensão que a mencionada neste manual ou no corpo do monitor.

Tomadas sobrecarregadas e extensões podem provocar incêndios e danificar o monitor. Verifique bem as tomadas antes de efetuar a conexão do cabo de força.

Não abra o Monitor
- Não existem componentes que possam ser trocados pelo usuário dentro do monitor e mesmo que ele esteja desligado e com o cabo de força desconectado, existem pontos de ALTA TENSÃO altamente perigosos presentes.
- Sinais de abertura do monitor invalidarão definitivamente a garantia.

Para Evitar Acidentes Pessoais :
- Não coloque o monitor em superfícies inclinadas.
- Não coloque o monitor sobre superfícies que não suportem seu peso.
- Não tente arrastar a mesa onde se encontra o monitor. Retire o monitor da mesa, coloque-a em sua nova posição e depois coloque o monitor sobre ela.

Para Evitar Incêndios e Choques Elétricos :
- Sempre desligue o monitor ao abandonar a sala onde ele se encontra Nunca deixe o monitor ligado ao sair do escritório ou de casa.
- Evite que crianças coloquem objetos nas aberturas do monitor. Algumas partes internas do monitor apresentam tensões elevadas (da ordem de milhares de volts).
- Não adicione acessórios que não tenham sido projetados para este monitor.
- Durante tempestades elétricas (com raios e trovões) ou durante períodos em que o monitor permanecerá sem uso, desconecte-o da tomada.
- Não deixe dispositivos magnéticos (alto falantes, motores, imãs, etc.) próximos do tubo do monitor.

Na Instalação

Não deixe nenhum objeto sobre o cabo de força e nem coloque o monitor em locais onde o cabo de força possa ser danificado.

Não use o monitor em locais próximos a água, tais como banheiras, aquários, pias, ou em locais úmidos.

Os monitores possuem frestas para ventilação. Se estas frestas são bloqueadas, o calor gerado pelo monitor pode causar falhas de funcionamento que podem gerar um incêndio. Portanto, NUNCA:
- Bloqueie as frestas de ventilação colocando o monitor sobre camas, sofás, almofadas, etc.
- Coloque o monitor em locais fechados, a não ser que ventilação adequada tenha sido providenciada.
- Fechar as frestas de ventilação com panos ou outros materiais.
- Colocar o monitor sobre ou próximo a superfícies geradoras de calor.

Somente para monitores LCD

Não esfregue ou toque no Active Matrix LCD com objetos duros que possam riscá-lo, estragá-lo ou danificá-lo permanentemente.

Não esfregue ou toque no Active Matrix LCD com objetos duros que possam riscá-lo, estragá-lo ou danificá-lo permanentemente.

Talvez surjam alguns defeitos de pontos na tela, como manchas vermelhas, verdes ou azuis. Entretanto, isso não afetará o desempenho do monitor.

Se possível, utilize a resolução recomendada para obter a melhor qualidade de imagem do seu monitor LCD. Se for utilizado qualquer modo que não seja a resolução recomendada, podem aparecer imagens redimensionadas ou processadas na tela. Entretanto, trata-se de uma característica da tela LCD com resolução fixa.

Na Limpeza

- Desconecte o monitor antes de limpar sua tela.
- Utilize um tecido macio umedecido (não molhado). Não utilize produtos em aerossol diretamente na tela, pois o jato em excesso pode causar choque elétrico.

Na Reembalagem

- Não jogue fora a caixa e os suportes originais do produto. Caso necessite transportar o monitor, a caixa original é a embalagem ideal O uso de outras embalagens pode danificar o monitor durante o transporte, mesmo que a embalagem permaneça intacta.

DDC (Display Data Channel)

DDC é um canal de comunicação através do qual o monitor informa ao computador a respeito de suas características.

Protocolo DDC

① DDC1/DDC2B
Um canal de comunicação unidirecional.

② DDC 2AB/DDC2B+/DDC2Bi
Um canal de comunicação bidirecional.

Ovservação

- *O PC deve suportar DDC para fazer isso.*

Sistema de Gerenciamento de Energia

Este monitor está de acordo com o programa Energy Star da EPA (Agência de Proteção Ambiental Americana), cujo objetivo é determinar aos produtores de equipamentos de informática padrões para projetos de circuitos que gastam menos energia quando não estão em uso.

Quando o monitor for utilizado com Green ou EPA Energy Star PC ou com um PC com software protetor de tela de acordo com o protocolo VESA Display Power Management Signalling (DPMS), este monitor pode economizar uma quantidade considerável de energia reduzindo seu consumo enquanto não estiver sendo utilizado.

Existem 2 linhas de sinal, 4 modos de operação.
; Normal, Em espera, Suspenso e Desligado.

Modo	Sinc. Horiz.	Sinc. Vert.	Cor do LED
Normal	Ligado	Ligado	Verde
Em espera	Desligado	Ligado	Laranja
Suspenso	Ligado	Desligado	Laranja
Desligado	Desligado	Desligado	Laranja

Quando você acionar o PC pressionando alguma tecla ou movendo o mouse, o monitor também será acionado, passando para o modo normal de operação, indicado pela luz verde do LED.

Observação

- *O Projeto de economia de energia para monitores funciona somente se eles estiverem conectados a computadores com esse recurso.*

Manutenção

Desligue o monitor da tomada e procure por serviço autorizado, quando:

- O cabo de força ou plugue estiver danificado ou rompido.
- Houve queda de líquido no monitor.
- O monitor foi exposto à chuva ou água.
- O monitor não opera normalmente seguindo as instruções de operação. Ajuste somente os controles descritos nas instruções de operação. Uma tentativa de ajuste de outros controles invali-dará a garantia, além de exigir diversas horas de trabalho de pessoal qualificado para restaurar as condições originais de fun-cionamento do monitor.
- O monitor caiu ou está com o gabinete quebrado.
- O monitor exibe uma distinta mudança de performance.
- O monitor emite estalos ou estouros continuamente durante sua operação normal. Para alguns monitores é normal se ouvirem estalos quando se liga ou desliga o monitor ou quando há mudança de modo de vídeo.

Não tente efetuar a manutenção do monitor você mesmo. Abrir ou remover as tampas do gabinete deixarão expostos pontos de alta tensão em diversas partes do monitor. Procure sempre pessoal qualificado para execução de serviços de manutenção.

FCC Compliance Statement

This equipment has been tested and found to comply within the limits of a Class B digital device pursuant to Part 15 of the FCC Rules. These limits are designed to provide reasonable protection against harmful interference in a residential installation.

This equipment generates, uses, and can radiate radio frequency energy and if not installed and used in accordance with the instructions, may cause harmful interference to radio communications. However, there is no guarantee that interference will not occur in a particular installation.

If this equipment does cause harmful interference to radio or television reception (which can be determined by turning the equipment on and off), the user is encouraged to try to correct the interference by using one or more of the following measures:

- Reorient or relocate the receiving antenna.
- Increase the separation between the equipment and the receiver.
- Connect the equipment into an outlet on a circuit different from that to which the receiver is connected.
- Consult the dealer or an experienced radio/TV technician for help.

Caution: Changes or modifications not expressly approved by the party responsible for compliance could void the user's (or your) authority to operate the equipment. Only peripherals (digital input/output devices, terminals, printers, etc.) certified to comply with the Class B limits may be attached to this monitor. Operation with non-certified peripherals is likely to result in interference to radio and TV reception.
Only shielded signal cables may be used with this System.

NOTICE
The regulations are applied only to the products with the ID LABEL indicating specific requirements.

Canadian DOC Notice

This Class B digital apparatus meets all requirements of the Canadian Interference-Causing Equipment Regulations.
Cet appareil numérique de la classe B respecte toutes les exigences du Règlement sur le matériel brouilleur du Canada.

NOTICE
The regulations are applied only to the products with the ID LABEL indicating specific requirements.

CE Conformity Notice (for Europe)

Products with the "CE" Marking comply with the EMC Directive(89/336/EEC) and LOW VOLTAGE Directive (73/23/EEC) issued by the Commission of the European Community.
Compiance with these directives implies conformity to the following European Norms :

- EN 55022 ; Radio Frequency Interference
- EN 50082-1:1992 ; Electromagnetic Immunity
- EN 60555-2 ; Power Line Harmonics
- EN 60555-3 ; Voltage Fluctuations
- EN 60950 ; Product Safety

NOTICE
The regulations are applied only to the products with the ID LABEL indicating specific requirements.

Low Radiation Compliance (MPR II)

This monitor meets one of the strictest guidelines available today for low radiation emissions, offering the user extra shielding and an antistatic screen coating. These guidelines, set forth by a government agency in Sweden, limit the amount of emission allowed in the Extremely Low Frequency (ELF) and Very Low Frequency (VLF) electromagnetic range.

TCO95

Congratulations!
You have just purchased a TCO'95 approved and labelled product! Your choice has provided you with a product developed for professional use. Your purchase has also contributed to reducing the burden on the environment and to the further development of environmentally-adapted electronic products.

Why do we have environmentally labelled computers?
In many countries, environmental labelling has become an established method for encouraging the adaptation of goods and services to the environment. The main problem as far as computers and other electronic equipment are concerned is that environmentally harmful substances are used both in the products and during their manufacture. Since it has not been possible so far for the majority of electronic equipment to be recycled in a satisfactory way, most of these potentially damaging substances sooner or later enter Nature.

There are also other characteristics of a computer, such as energy consumption levels, that are important from both the working and natural environment viewpoints. Since all types of conventional electricity generation have a negative effect on the environment (acidic- and climatic-influencing emissions, radioactive waste, etc.), it is vital to conserve energy. Electronic equipment in offices consumes as enormous amount of energy, since it is often routinely left running continuously.

What does the environmenal labelling involve?
This product meets the requirements for the TCO'95 scheme, which provides for international environmental labelling of personal computers. The labelling scheme was developed as a joint effort by the TCO (The Swedish Confederation of Professional Employees), Naturckyddsföreningen (The Swedish Society for Nature Conservation), and NUTEK (The National Board for Industrial and Technical Development in Sweden), and SEMKO AB (an international certification agency).

The requirements cover a wide range of issues: environment, ergonomics, usability, emission of electrical and magnetic fields, energy consumption and electrical and fire safety.

The environmental demands concern, among other things, restriction on the presence and use of heavy metals, brominated and chlorinated flame retardants, CFCs (freons), and chlorinated solvents. The product must be prepared for recycling, and the manufacturer is obliged to have an environmental plan, which must be adhered to in each country where the company implements its operational policy.

The energy requirements include a demand that the computer and/or display, after a certain period of inactivity, shall reduce its power consumption to a lower level, in one or more stages. The length of time to reactivate the computer shall be reasonable for the user.

Labelled products must meet strict environmental demands, for example, in respect of the reduction of electric and magnetic fields, along with physical and visual ergonomics and good usability.

The following is a brief summary of the environmental requirements met by this product. The complete environmental criteria document may be ordered from:

TCO Development Unit
Linnegatan 14, S-11494 Stockholm, Sweden
FAX +46-8 782 92 07
E-mail (Internet): development@tco.se

Current information regarding TCO'95 approved and labelled products may also be obtained on the Internet using the address: http://www.tco-info.com/

TCO'95 is a co-operative project between:

TCO NUTEK SEMKO
Naturskydds föreningen
Närings- och teknikutvecklingsverket

Environmental requirements
Brominated flame retardants are present in printed circuit boards, cabling, casings, and housings, and are added to delay the spread of fire. Up to 30% of the plastic in a computer casing can consist of flame-retardant substances. These are related to another group of environmental toxins, PCBs, and are suspected of giving rise to similar harm, including reproductive damage in fish-eating birds and mammals. Flame retardants have been found in human blood, and researchers fear that they can disturb fetus development.

Bio-accumulative[1] TCO'95 demands require that plastic components weighing more than 25 grams must not contain flame retardants with organically bound chlorine or bromine.

Lead can be found in picture tubes, display screens, solder, and capacitors. Lead damages the nervous system and in higher doses causes lead poisoning. The relevant bio-accumulative TCO'95 requirement permits the inclusion of lead, as no replacement has yet been developed.

Cadmium is present in rechargeable batteries and in the color-generating layers of certain computer displays. Cadmium damages the nervous system and is toxic in high doses. The relevant bio-accumulative TCO'95 requirement states that batteries may not contain more than 25 ppm (parts per million) of cadmium. The color-generating layers of display screens must not contain any cadmium.

Mercury is sometimes found in batteries, relays and switches. Mercury damages the nervous system and is toxic in high doses. The relevant bio-accumulative TCO'95 requirement states that batteries may not contain more than 25 ppm of mercury and that no mercury is present in any of the electrical or electronic components concerned with the display unit.

CFCs (freons) are sometimes used for washing printed circuit boards and in the manufacture of expanded foam for packaging. CFCs break down ozone and thereby damage the ozone layer in the atmosphere, causing increased reception on Earth of ultra-violet light with consequent increased risks of skin cancer (malignant melanoma). The relevant TCO'95 requirement: Neither CFCs nor HCFCs may be used during the manufacture of the product or its packaging.

[1] **Bio-accumulative means that the substance accumulates within living organisms.**

Shipping Package
The packaging material can be recycled, or you can save it to return the monitor to a service center for repair or disposal.

CFC Compounds in Distribution Packaging
Cushioning material used for shipping finished monitors are not manufactured with nor do they contain any CFC compounds.

Design for Disassembly/Recycling
These monitors have been designed for easy end-of-life disassembly and recycling. Fasteners are generally of the same type for efficient disassembly. Components made of different materials can be easily separated and plastics have been identified using international symbols to aid in recycling.

Monitor Disposal

WARNING
If you need to dispose of a monitor, ask a qualified service representative for the proper procedure. Improper disposal could result in personal injury from implosion.

TCO99

Congratulations!
You have just purchased a TCO'99 approved and labelled product! Your choice has provided you with a product developed for professional use. Your purchase has also contributed to reducing the burden on the environment and also to the further development of environmentally adapted electronics products.

Why do we have environmentally labelled computers?
In many countries, environmental labelling has become an established method for encouraging the adaptation of goods and services to the environment. The main problem, as far as computers and other electronics equipment are concerned, is that environmentally harmful substances are used both in the products and during their manufacture. Since it is not so far possible to satisfactorily recycle the majority of electronics equipment, most of these potentially damaging substances sooner or later enter nature.

There are also other characteristics of a computer, such as energy consumption levels, that are important from the viewpoints of both the work (internal) and natural (external) environments. Since all methods of electricity generation have a negative effect on the environment (e.g. acidic and climate-influencing emissions, radioactive waste), it is vital to save energy. Electronics equipment in offices is often left running continuously and thereby consumes a lot of energy.

What does labelling involve?
This product meets the requirements for the TCO'99 scheme which provides for international and environmental labelling of personal computers. The labelling scheme was developed as a joint effort by the TCO (The Swedish Confederation of Professional Employees), Svenska Naturskyddsforeningen (The Swedish Society for Nature Conservation) and Statens Energimyndighet (The Swedish National Energy Administration).

Approval requirements cover a wide range of issues: environment, ergonomics, usability, emission of electric and magnetic fields, energy consumption and electrical and fire safety.

The environmental demands impose restrictions on the presence and use of heavy metals, brominated and chlorinated flame retardants, CFCs (freons) and chlorinated solvents, among other things. The product must be prepared for recycling and the manufacturer is obliged to have an environmental policy which must be adhered to in each country where the company implements its operational policy.

The energy requirements include a demand that the computer and/or display, after a certain period of inactivity, shall reduce its power consumption to a lower level in one or more stages. The length of time to reactivate the computer shall be reasonable for the user.

Labelled products must meet strict environmental demands, for example, in respect of the reduction of electric and magnetic fields, physical and visual ergonomics and good usability.

Regulatory Information cont.

Below you will find a brief summary of the environmental requirements met by this product. The complete environmental criteria document may be ordered from:

TCO Development
SE-114 94 Stockholm, Sweden
Fax: +46 8 782 92 07
Email (Internet): development@tco.se
Current information regarding TCO'99 approved and labelled products may also be obtained via the Internet, using the address: http://www.tco-info.com/

Environmental requirements

Flame retardants
Flame retardants are present in printed circuit boards, cables, wires, casings and housings. Their purpose is to prevent, or at least to delay the spread of fire. Up to 30% of the plastic in a computer casing can consist of flame retardant substances. Most flame retardants contain bromine or chloride, and those flame retardants are chemically related to another group of environmental toxins, PCBs. Both the flame retardants containing bromine or chloride and the PCBs are suspected of giving rise to severe health effects, including reproductive damage in fish-eating birds and mammals, due to the bio-accumulative* processes. Flame retardants have been found in human blood and researchers fear that disturbances in foetus development may occur.

The relevant TCO'99 demand requires that plastic components weighing more than 25 grams must not contain flame retardants with organically bound bromine or chlorine. Flame retardants are allowed in the printed circuit boards since no substitutes are available.

Cadmium**
Cadmium is present in rechargeable batteries and in the colour-generating layers of certain computer displays. Cadmium damages the nervous system and is toxic in high doses. The relevant TCO'99 requirement states that batteries, the colour-generating layers of display screens and the electrical or electronics components must not contain any cadmium.

Mercury**
Mercury is sometimes found in batteries, relays and switches. It damages the nervous system and is toxic in high doses. The relevant TCO'99 requirement states that batteries may not contain any mercury. It also demands that mercury is not present in any of the electrical or electronics components associated with the labelled unit.

CFCs (freons)
The relevant TCO'99 requirement states that neither CFCs nor HCFCs may be used during the manufacture and assembly of the product. CFCs (freons) are sometimes used for washing printed circuit boards. CFCs break down ozone and thereby damage the ozone layer in the stratosphere, causing increased reception on earth of ultraviolet light with e.g. increased risks of skin cancer (malignant melanoma) as a consequence.

Lead**
Lead can be found in picture tubes, display screens, solders and capacitors. Lead damages the nervous system and in higher doses, causes lead poisoning. The relevant TCO'99 requirement permits the inclusion of lead since no replacement has yet been developed.

*** Bio-accumulative is defined as substances which accumulate within living organisms**
**** Lead, Cadmium and Mercury are heavy metals which are Bio-accumulative.**

EPA (U.S.A only)

ENERGYSATR is a set of power-saving guidelines issued by the U.S. Environmental Protection Agency(EPA).

EPA POLLUTION PREVENTER

As an ENERGY STAR Partner LG Electronics U. S. A.,Inc. has determined that this product meets the ENERGY STAR guidelines for energy efficiency.

NOM MARK (Mexico only)

NOM NYCE

Warranty

the United States and Canada - CDT Monitor:

MONITOR LIMITED WARRANTY

LG Electronics will repair or at its option replace, without charge, your product which proves to be defective in material or workmanship under normal use, during the warranty period listed below from the date of original purchase. **This warranty is good only to the original purchaser of the product during the warranty period as long as it is in the U.S., including Alaska, Hawaii, U.S. Territories; and all Canadian Provinces.**

WARRANTY PERIOD:

MODEL #	PARTS & LABOR	3 Years	HOW SERVICE IS HANDLED
			Call 1 (800) 243-0000 and select the appropriate menu option, 24 hrs a day, 7 days per week. Please have your product type (MONITOR) and ZIP/Postal code ready.

No other express warranty is applicable to this product. **THE DURATION OF ANY IMPLIED WARRANTIES, INCLUDING THE IMPLIED WARRANTY OF MERCHANTABILITY, IS LIMITED TO THE DURATION OF THE EXPRESS WARRANTY HEREIN. LG ELECTRONICS SHALL NOT BE LIABLE FOR THE LOSS OF THE USE OF THE PRODUCT, INCONVENIENCE, LOSS OR ANY OTHER DAMAGES, DIRECT OR CONSEQUENTIAL, ARISING OUT OF THE USE OF, OR INABILITY TO USE, THIS PRODUCT OR FOR ANY BREACH OF ANY EXPRESS OR IMPLIED WARRANTY, INCLUDING THE IMPLIED WARRANTY OF MERCHANTABILITY APPLICABLE TO THIS PRODUCT.**
Some states do not allow the exclusion or limitation of incidental or consequential damages or limitations on how long an implied warranty lasts; so these limitations or exclusions may not apply to you. This warranty gives you specific legal rights and you may also have other rights which vary from state to state or province to province.

THE ABOVE WARRANTY DOES NOT APPLY:

- To damages or problems which result from delivery or improper installation.
- To damages or problems which result from misuse, abuse, accident, alteration, or incorrect electrical current or voltage.
- To service calls, which do not involve defective workmanship or material, such as explaining the operation of the unit.

Therefore, these costs are paid by the consumer.

CUSTOMER ASSISTANCE NUMBERS:

To Prove Warranty Coverage:	→	**Retain your sales receipt to prove date of purchase.**
	→	A copy of your sales receipt must be submitted at the time warranty service is provided.
To obtain Technical Support or Customer Assistance:	→	CALL 1 (800) 243-0000, (Mon.-Fri. 7 a.m.-10 p.m. Central Time) and select the appropriate menu option. See our website at **http://www.LGEservice.com** or send e-mail via our submission form at **http://www.LGEservice.com/techsup.html**
For Your Nearest Authorized Service Center	→	Call 1 (800) 243-0000 and select the appropriate option, 24 hours a day, 7 days per week. Please have your product type (MONITOR) and ZIP/Postal Code ready.

This information subject to change at any time without notice.

Warranty cont.

the United States and Canada - LCD Monitor:

LG ELECTRONICS USA and CANADA
LCD MONITOR LIMITED WARRANTY

LG Electronics, will repair or at its option replace, without charge, your product which proves to be defective in material or workmanship under normal use, during the warranty period listed below from the date of original purchase. **This warranty is good only to the original purchaser of the product during the warranty period as long as it is in the U.S., including Alaska, Hawaii, U.S. Territories, and in all Canadian Provinces.**

WARRANTY PERIOD:

MODEL #	LABOR	PARTS	HOW SERVICE IS HANDLED
	3 Year	3 Year	2 working day repair service after receiving at LG Electronics. **Please retain your box to return the unit for repair.**
Please write in Serial #		**BACK LIGHT** 1 Year	For further instructions please see below. **1st year freight both ways paid by LGE** **2nd & 3rd customer pays one-way, LGE pays return freight**
_____			

No other express warranty is applicable to this product. **THE DURATION OF ANY IMPLIED WARRANTIES, INCLUDING THE IMPLIED WARRANTY OF MERCHANTABILITY, IS LIMITED TO THE DURATION OF THE EXPRESS WARRANTY HEREIN. LG ELECTRONICS, SHALL NOT BE LIABLE FOR THE LOSS OF THE USE OF THE PRODUCT, INCONVENIENCE, LOSS OR ANY OTHER DAMAGES, DIRECT OR CONSEQUENTIAL, ARISING OUT OF THE USE OF, OR INABILITY TO USE, THIS PRODUCT OR FOR ANY BREACH OF ANY EXPRESS OR IMPLIED WARRANTY, INCLUDING THE IMPLIED WARRANTY OF MERCHANTABILITY APPLICABLE TO THIS PRODUCT.**

Some states/provinces do not allow the exclusion or limitation of incidental or consequential damages or limitations on how long an implied warranty lasts; so these limitations or exclusions may not apply to you. This warranty gives you specific legal rights and you may also have other rights which vary from state to state or province to province.

THE ABOVE WARRANTY DOES NOT APPLY:

- To damages or problems which result from delivery or improper shipping.
- To damages or problems which result from misuse, abuse, accident, alteration, or incorrect electrical current or voltage.
- To service calls which do not involve defective workmanship or material, such as explaining the operation of the unit.

Therefore, these costs are paid by the consumer.

CUSTOMER ASSISTANCE NUMBERS:

To prove warranty coverage:	**Retain your Sales Receipt to prove date of purchase and your box for shipping the unit in for repair.** Copy of your Sales Receipt must be submitted with the unit at the time warranty service is provided.
To obtain where to buy, product or customer assistance:	Call 1-800-243-0000 (Mon. - Fri. 7AM to 10PM CST) Please select the appropriate option from the menu. See our web site at **http://www/LGEservice.com** or send e-mail via our form at **http://www.LGEservice.com/techsup.html**

FOR SERVICE

You must call Product Assistance to confirm the product needs servicing and to obtain Return Authorization (RA). *(1-800-243-0000 Mon. - Fri. 7AM to10PM CST please select the appropriate option from the menu)* During the first year of warranty, LGE will send you a return shipping label; thereafter, customer has to pay for freight in to LGE. After you obtain authorization for return, please box your unit with a copy of the sales receipt and enough packing material to insure safe delivery of your product. When you receive the label, place it on the box and call the 800 # in the instruction for pick-up. When your unit is received, LGE will repair your unit in 2 working days and return to you via 2-day delivery service.

Warranty cont.

Australia - CDT & LCD Monitor:

COLOUR MONITOR WARRANTY		
Complete the details on this form and retain in the event of warranty service being required (purchase receipt attached).		
PURCHASER'S NAME		
ADDRESS		
CITY	STATE	POST CODE
MODEL NO.	SERIAL NO.	
DATE OF PURCHASE	INVOICE/SALES DOCKET NO.	
RETAILER'S NAME		
ADDRESS		
CITY	STATE	POST CODE

TERMS OF WARRANTY

Should a defect in this product due to either FAULTY MATERIAL or WORKMANSHIP become apparent within the period of 36 months from the date of original purchase of the product such defect will be rectified, without cost to you for either labor or material, at the premises of Authorized Service Centre.
subject to:

1. Particulars of the model and serial number, the date of original purchase and invoice/ sales docket number being given to the authorized service centre when a claim under warranty is made, Purchase receipt must be produced.
2. All (a) damage resulting from incorrect installation or use other than in accordance with the operating instructions issued by the Company(b) consequential damage, being excluded from this Warranty.
3. The Warranty being rendered invalid if the product is misused or if any unauthorized alteration, modification, or substitution of any part of the product be made or the serial number of the product is defaced or altered.
4. Cost of transportation both ways to and from the authorized service centre being met by the owner if it is necessary to return the product or any part to an authorized service centre.
5. The Warranty not applying except to the servicing within Australia of products purchased in Australia.
6. LG shall not be liable for the loss of use of product, inconvenience, loss or any other damages, direct or consequential arising out of the use, or the inability to use this product during the terms and conditions of the warranty period. If any legislation whether Federal or State to applies to this transaction, certain non-exclude conditions and may be implied and certain non-exclude rights may arise but except for such conditions,warranties and rights, all conditions and warranties which might otherwise be implied in this transaction are hereby excluded and negated.

IMPORTANT NOTICE

1. LG Electronics Australia Pty,. Ltd. has arranged for authorized service centres to perform all after-sales and warranty service on its behalf.
2. The authorized service centre can accept no responsibility for damage in transit to and from his premises.
3. If the product or any parts returned to an authorized service centre for any cause not covered by this warranty, all costs involved, including a charge for inspection and handling must be paid to the authorized service centre.
4. Changes not covered by the terms of this Warranty must be borne by the owner. Such charges may arise through the cost of any service call where the product is found to be incorrected installed, maladjustment of user controls, or failure to follow operating instructions, mains supply defects or external interference.
5. No retailer has authority to very the terms of the above warranty.

ADDRESS: 23 Pike Street, Rydalmere NSW 2116
Toll Free Line: 1800 643 156
TEL: 9684-8000

Brazil - CDT Monitor:

TERMO DE GARANTIA

A LG Electronics de São Paulo Ltda. garante este produto pelo período de 3(três) anos, contados a partir da data de emissão da Nota Fiscal de compra, desde que o mesmo tenha sido instalado conforme orientações descritas neste manual de instruções e, somente em Território Nacional.

Durante o período estipulado, a garantia cobre peças e mão-de-obra que apresentarem defeito de fabricação. Somente o técnico do Serviço Autorizado credenciado pela LG Electronics de São Paulo Ltda., está autorizado a reparar defeitos cobertos pela garantia, mediante apresentação da Nota Fiscal de compra.

O consumidor tem o prazo de 90 dias para reclamar de irregularidades (vícios) aparentes, ou seja, de fácil e imediata observação no produto, tais como os ítens que constituam a parte externa e qualquer outro acessível ao usuário.

A garantia de peça sujeita ao desgaste natural (peças plásticas e acessórios em geral), fica restrita ao prazo legal de 90 dias, a contar da data de emissão da Nota Fiscal de compra.

A garantia perde seu efeito se:

- A instalação ou utilização do produto estiver em desacordo com as recomendações do manual de instruções;
- O produto sofrer qualquer dano provocado por acidente, queda, agentes da natureza ou consertos realizados por pessoas não credenciadas pela LG Electronics de São Paulo Ltda;.
- O número de série do produto estiver danificado ou adulterado.

A garantia não cobre:

- Transporte e remoção de produtos para conserto, ou daqueles que estejam instalados fora do perímetro urbano onde se localiza o Serviço Autorizado LG mais próximo;
- Desempenho insatisfatório do produto devido a instalação ou rede elétrica local inadequadas;
- Transporte e remoção de produtos que estejam instalados em locais de risco até o Serviço Autorizado LG mais próximo.

OBS: Se o consumidor desejar ser atendido no local em que o produto estiver instalado, ficará a critério do Serviço Autorizado a cobrança de taxa de visita e deslocamento, devendo o consumidor consultá-lo antes de solicitar o serviço.
Este produto destina-se exclusivamente ao uso doméstico ou amador. A LG Electronics de São Paulo Ltda. não cobrirá qualquer prejuízo do usuário, amador ou profissional, decorrente da impossibilidade de utilização do produto.

A GARANTIA SOMENTE É VÁLIDA MEDIANTE A APRESENTAÇÃO DA NOTA FISCAL DE COMPRA DESTE PRODUTO

LG Electronics de São Paulo Ltda.

Central LG de Atendimento ao Consumidor
Ligue: 0800.171514
LIGAÇÃO GRATUITA

LCD Monitor:

TERMO DE GARANTIA

A LG Electronics de São Paulo Ltda. garante este produto pelo período de 90 dias, mais 2 anos e nove meses contados a partir da data de emissão da Nota Fiscal de compra, desde que o mesmo tenha sido instalado conforme orientações descritas neste manual de instruções e, somente em Território Nacional.

Durante o período estipulado, a garantia cobre peças e mão-de-obra que apresentarem defeito de fabricação. Somente o técnico do Serviço Autorizado credenciado pela LG Electronics de São Paulo Ltda., está autorizado a reparar defeitos cobertos pela garantia, mediante apresentação da Nota Fiscal de compra.

O consumidor tem o prazo de 90 dias para reclamar de irregularidades (vícios) aparentes, ou seja, de fácil e imediata observação no produto, tais como os ítens que constituam a parte externa e qualquer outro acessível ao usuário.

A garantia de peça sujeita ao desgaste natural (peças plásticas e acessórios em geral), fica restrita ao prazo legal de 90 dias, a contar da data de emissão da Nota Fiscal de compra.

A garantia perde seu efeito se:

- A instalação ou utilização do produto estiver em desacordo com as recomendações do manual de instruções;
- O produto sofrer qualquer dano provocado por acidente, queda, agentes da natureza ou consertos realizados por pessoas não credenciadas pela LG Electronics de São Paulo Ltda;.
- O número de série do produto estiver danificado ou adulterado.

A garantia não cobre:

- Transporte e remoção de produtos para conserto, ou daqueles que estejam instalados fora do perímetro urbano onde se localiza o Serviço Autorizado LG mais próximo;
- O mal funcionamento do produto devido a instalaçaõ ou rede elétrica local inadequadas.

OBS: Se o consumidor desejar ser atendido no local em que o produto estiver instalado, ficará a critério do Serviço Autorizado a cobrança de taxa de visita e deslocamento, devendo o consumidor consultá-lo antes de solicitar o serviço.
Este produto destina-se exclusivamente ao uso amador ou profissional. A LG Electronics de São Paulo Ltda. não cobrirá qualquer prejuízo do usuário, amador ou profissional, decorrente da impossibilidade de utilização do produto.

A GARANTIA SOMENTE É VÁLIDA MEDIANTE A APRESENTAÇÃO DA NOTA FISCAL DE COMPRA DESTE PRODUTO

LG Electronics de São Paulo Ltda.

Central LG de Atendimento ao Consumidor
Ligue: 0800.171514
LIGAÇÃO GRATUITA

Mexico- CDT Monitor:

Garantia Limitada Para México

POLIZA DE GARANTIA

LG Electronics México, S.A. de C.V. GARANTIZA LOS MONITORES GOLDSTAR/LG POR EL TERMINO DE TRES AÑOS EN TODAS SUS PARTES Y MANO DE OBRA, CONTRA CUALQUIER DEFECTO DE FABRICACION A PARTIR DE LA FECHA DE ENTREGA DEL PRODUCTO BAJO LAS SIGUIENTES

CONDICIONES

1.- PARA HACER EFECTIVA ESTA GARANTIA ES NECESARIO PRESENTAR ESTA POLIZA DEBIDAMENTE SELLADA POR LA CASA VENDEDORA O FACTURA DE COMPRA EN CUALQUIERA DE LOS CENTROS DE SERVICIO QUE SE INDICAN EN EL ANEXO.

2.- LA EMPRESA SE COMPROMETE A REPARAR O CAMBIAR, EL PRODUCTO DEFECTUOSO SIN NINGUN CARGO PARA EL CLIENTE Y CUBRIR LOS GASTOS QUE SE DERIVEN DE LA PRESENTE GARANTIA.

3.- EL TIEMPO DE REPARACION EN NINGUN CASO SERA MAYOR DE 30 DIAS CONTADOS A PARTIR DE LA FECHA DE RECEPCION DEL PRODUCTO EN CUALQUIERA DE LOS SITIOS DONDE PUEDE HACERSE EFECTIVA ESTA GARANTIA.

4.- LAS REFACCIONES Y PARTES PARA LA REPARACION DEL APARATO QUE AMPARA ESTA POLIZA PODRAN SER ADQUIRIDAS EN LOS CENTROS DE SERVICIO AUTORIZADOS.

ESTA GARANTIA NO ES VALIDA EN LOS SIGUIENTES CASOS

A) SI EL PRODUCTO NO HA SIDO OPERADO CONFORME AL INSTRUCTIVO ANEXO.

B) SI NO SE HAN OBSERVADO LAS ADVERTENCIAS SEÑALADAS.

C) DAÑOS OCASIONADOS POR FENOMENOS NATURALES COMO INCENDIO, INUNDACION, TEMBLORES, RAYOS, DESCARGAS ELECTRICAS.

D) DAÑOS POR GOLPES, RASPADURAS, ROTURAS EN EL PRODUCTO Y EN SUS ACCESORIOS.

E) SI EL PRODUCTO HA TRATADO DE SER REPARADO POR PERSONAS NO AUTORIZADAS POR:

LG Electronics México, S.A. de C.V.

PRODUCTO: MONITORS

MODELO: _____ SERIE: _____

DISTRIBUIDOR: _____

DIRECCION: _____ COLONIA _____

CIUDAD _____ EDO. _____

FECHA DE ENTREGA _____

SELLO Y FIRMA

CENTRO DE SERVICIO DIRECTO.

México D.F.	(5)3 211900	Av. Sor Juana Inés de la Cruz No. 555 . Col. San Lorenzo, Tlalnepantla Edo. Mex
Guadalajara	(3)6195523	Chicago No. 120, Col. Ferrocarril Guadalajara, Jalisco.
Monterrey	(8)3 549111	Ruiz Cortines Ote No 2822 Col. La Moderna. Monterrey, Nuevo León.
Mérida	(99) 255049	Calle 60 No 360, Col. Centro, Merida Yucatán.

CENTRO DE SOLUCION AL CLIENTE

Teléfono	Lada sin costo 01 (800) 50 48100 y en el DF 3 211900
Fax	Lada sin costo 01 (800) 50 73300 y en el DF 5 657549

LG Electronics México S.A. de C.V.

Av. Sor Juana Inés de la Cruz No. 555. Col. San Lorenzo, Tlalnepantla, Edo. de Mex. Tel. 3 21 19 00

NOTA : EN CASO DE EXTRAVIO DE LA PRESENTE GARANTIA EL CONSUMIDOR PUEDE SOLICITAR UNA REPOSICION. PREVIA PRESENTACION CON FACTURA DE COMPRA CON EL PROVEEDOR O DIRECTAMENTE A LG ELECTRONICS MEXICO.

Centro de Servicio Gobal Cibernetico (México)

Ciudad	E-mail	Teléfono	Línea
Celaya, Guanajuato	pedro4@ibm.net	(461)-238-10	E
Toluca, Edo. Méx.	shureeoi@yahoo.com	(72)-13-34-24	E
Hermosillo, Sonora	macamax@hotmail.com	(62)-11-59-24	E, LB
Hermosillo, Sonora	alfrgs@prodigy.net.mx	(62)-13-14-60 (62)-12-22-00	LB, RAC, IRAC
Cancun, Quintana Roo	amador@qrool.telnex.net.mx	(98)-87-96-89	LB, RAC, IRAC
Guadalajara, Jalisco	setesa@vianet.com.mx	(3)-635-18-75	E
México, D.F.	mhkim@infosel.net.mx	(5)-611-87-06	E
Veracruz, Veracruz	servicenterv@mexis.com	(29)-32-00-18	E, LB, RAC, IRAC
Mazatlan, Sinaloa	eracitti@sin.telmex.net.mx	(69)-85-37-48	LB
México D.F.	meretivallejo@hotmail.com	(5)-739-09-93	LB
Chalco, Edo. Méx.	asalasg@edomex1.telmex.net.mx	(5)-975-21-49	E, LB
Merida, Yucatan	cena@sureste.com	(99)-26-11-53	E, LB
México, D.F.	alflonat@hotmail.com.mx	(5)-544-31-55	IRAC
Tuxtla Gutierrez, Chiapas	elba7@yupimail.com.mx	(961)-323-06	E
Villahermosa, Tabasco	svmaster@podigy.net.mx	(93)-16-32-06	E, LB
Zamora, Michoacan	multis@cerse.com.mx	(351)-554-16	E, LB
Merida, Yucatan	mixers@prodigy.net.mx	(99)-27-30-79	IRAC
Cd. Juarez, Chihuahua	servitecjrz@hotmail.com	(16)-16-38-83	LB
México D.F.	laagsi@correoweb.com	(5)-797-61-48	E, MM
Guasave, Sinaloa	zynkoleo@debtel.com.mx	(687)-223-31	E

Nomenclatura:

E-mail: Correo electrónico
L/B: Centro de Servicio Autorizado de Línea Blanca
E: Centro de Servicio Autorizado de Línea Electrónica
RAC: Centro de Servicio Autorizado de Aire Acondicionado
MM: Centro de Servicio Autorizado de Multimedia
IRAC: Instalador de Aire Acondicionado

Acceso directo a la página de Internet de LG:

Consumidores: http://mx.lgservice.com/
ASC: http://biz.lgservice.com/

Servicio Directo LG

Ciudad	Domicilio	Telefono	Fax
Mexico, Estado de México	Sor. Juana Ines de la Cruz No. 555 Col. San Lorenzo Tlalnepantla, Edo. Méx	(5)-321-19-00 LADA S/COSTO 01-800-504-8100	(5)-321-19-18 (5)-321-19-08 01-800-507-3300
Monterrey, Nuevo Leon	Av. Ruiz Cortinez No. 2822 Oriente Col. Moderna	(8)-354-91-11 01-800-34-716-00	(8)-354-91-11
Guadalajara, Jalisco	Chicago No. 120 Col. Ferrocarril	(3)-619-55-22/23 01-800-96-722-00	(3)-619-55-24
Merida, Yucatan	Calle 60No. 360 x 37 Col. Centro	(99)-25-50-49 01-800-34-718-00	(99)-25-50-49

the United Kingdom - CDT&LCD Monitor:

LG Electronics U.K. Ltd

3 Year On-Site Monitor Swap Out Warranty

BRANDS ELECTRONICS

Thank you for choosing LG.
This **Monitor** is supplied with a 3-year on-site swap-out warranty from the first date of purchase.
The Replacement will normally be a model of same or higher specification

BRANDS ELECTRONICS will normally provide this Service on a "Next Working Day" basis, for calls received before 3 p.m.
For Ireland & Outlying areas, this may take a little longer.

In the event of a fault, please call:

UK 01475 744788
Ireland 0044 1475 744788

Or Fax your details to:
UK 01475 742629
Ireland 0044 1475 742629

Brands Website: http://www.brands.co.uk
LG Service site: http://www.lgelectronics.co.uk
Sales Website: http://www.lge.co.kr

Conditions

1) This Warranty applies for 3 years from the first date of purchase only. The right to request sight of the original proof of purchase is reserved.
2) This warranty is valid in the UK Mainland, Ireland, Channel Islands and Isle of Man.
3) It is the user's responsibility to ensure that the product is used in accordance with the Manufacturer's guidelines detailed in the Instruction Manual supplied with your Monitor. Failure to do so may invalidate your Warranty.
4) All warranties will be immediately invalidated if unauthorised repairs or modifications are made to the monitor or in any case of accident, misuse, damage caused by improper installation and altered serial numbers. Pollution of the monitor with smoke, food, liquid or similar will be deemed as misuse.
5) LCD & TFT Monitors have 1 year on site and 2 years collect for repair. The Backlight in these units is warranted for 1 year only. Replacements are chargeable
6) LG Electronics reserves the right to collect repairs and return any monitor which has cabinet defilement, including security marking. We may also collect units for repair where no suitable replacement is immediately available.
7) The END USER will be liable for all costs associated with "Invalid Warranty Claims".
8) The Liability is limited to the cost of repair and/or replacement of the unit under warranty.
9) This warranty does not affect the purchaser's statutory rights.
10) In the event that the Courier cannot obtain access on his first visit on the day agreed with the "End User", we reserve the right to charge for the second or subsequent delivery attempts.

FAQ's - Frequently asked questions - Please check before calling	
Power is on, but no picture visible	Check the leads are connected fully and that the Contrast/Brightness controls are set to normal
No Power	Check Mains Plug to see if fuse is blown. If your monitor takes power from the PC, then try a separate Power Supply (Wall Socket)
Colour is distorted down one side	Make sure Speakers, Transformers or anything else magnetic are well away from the monitor
Colour is flickering	Make sure the 15 pin signal connector from the PC to the Monitor is correctly seated in the socket at both the PC and the Monitor end (If applicable to the Monitor, some Cables are hard wired.) Try another cable if available.

Monitor Driver Installation

for Windows® 95/98

When you install the Monitor Driver, resolution and frequency are automatically set to the Monitor. So you can work on the clearer display.
Monitor Driver Diskette will be provided for the 17-inch or higher Model (higher than 70kHz) with LCD.
If your monitor is not the one above or you lost the diskette, you can download the driver on http://www.lge.com

■ **INSTALL**

① **Start** **Settings** **Control Panel**.
② Double-click the **Display** icon.
③ Click the **Settings** tab, then click **Change Display Type**.
④ Under **Monitor Type**, click **Change** **Have Disk**.
⑤ Insert the **Monitor Installation Diskette** into the floppy drive and click **OK**.
⑥ Under Model list, select your **LG Monitor**, then click **OK**. The monitor files are copied to the hard drive.
⑦ Click **OK** Close to save the settings.
⑧ Restart the system to activate the setting.

USB Install Guide

The following guide is only for the USB-Monitor software support Monitor.

■ **INSTALL**

① Before **Setting up** the **USB Program**, Connect the monitor to PC with the **USB signal** cable.
② Insert the“ **Monitor Installation Disk** ”into the floppy disk drive.
③ Select the **MNT_USB folder**, and double click the **setup**.
④ “ **USB Monitor** ”window is displayed, click the“ **Next** ”, and repeat **that**.
⑤ Click the“ **Finish** ”button and setup is completed.
⑥ Select the“ **Display properties** ”, and then you use the **USB Monitor Function**.

■ **UNINSTALL**

① Select the **Settings** and **Control Panel**, Double click the“ **Add/Remove Programs** ”.
② Select the“ **USB Monitor** ”.
③ Click the“ **Add/Remove** ”button and the Program is removed..

*Caution: This Program is supported **WINDOWS98** and Higher.*

IMPORTANT NOTICE

This message may appear several times during the installation of your monitor diskette.
*Click **Skip File** to continue (Windows 98), Click **Yes** to continue (Windows 2000).*
This action will not harm your monitor or system.

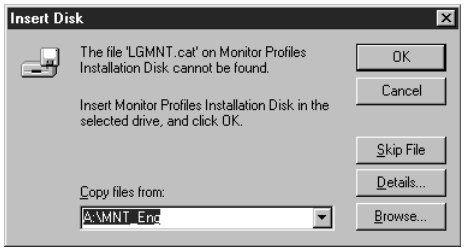

<Windows 98>

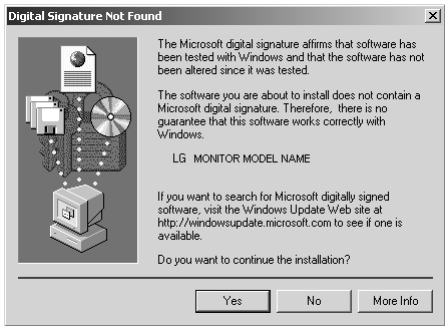

<Windows 2000>

For LG Customer Support:

World Wide Web:
http://www.lge.com

U.S. and Canada only:
website: http://www.LGEservice.com
e-mail: http://www.LGEservice.com/techsup.html

Brazil only:
LG Electronics de São Paulo LTDA.
C.G.C. NO. : 011666 372/0001-55
AV. D. Pedro 1, W-7777, Jardim Silvia Maria, Taubate-SP

Mexico only:
LG Electronics México S.A. de C.V.
Sor Juana Inés de la Cruz No. 555 Col. San Lorenzo
Tlalnepantla, Edo. de México C.P. 54033
Tel. 321 19 00 fax. 565 75 49
Lada sin costo 01 800 50 481 00

Printed in Korea
(3828TUL100D)