**Calibration Laboratory of**
Schmid & Partner
Engineering AG
**Zeughausstrasse 43, 8004 Zurich, Switzerland**

**S** Schweizerischer Kalibrierdienst
**C** Service suisse d'étalonnage
Servizio svizzero di taratura
**S** Swiss Calibration Service

Accredited by the Swiss Accreditation Service (SAS)
**The Swiss Accreditation Service is one of the signatories to the EA Multilateral Agreement for the recognition of calibration certificates**

**Accreditation No.: SCS 0108**

**Client** **AUDIX-TW (Auden)**

**Certificate No: D2450V2-888_Sep18**

# CALIBRATION CERTIFICATE

| | |
|---|---|
| Object | D2450V2 - SN:888 |
| Calibration procedure(s) | QA CAL-05.v10<br>Calibration procedure for dipole validation kits above 700 MHz |
| Calibration date: | September 27, 2018 |

This calibration certificate documents the traceability to national standards, which realize the physical units of measurements (SI).
The measurements and the uncertainties with confidence probability are given on the following pages and are part of the certificate.

All calibrations have been conducted in the closed laboratory facility: environment temperature (22 ± 3)°C and humidity < 70%.

Calibration Equipment used (M&TE critical for calibration)

| Primary Standards | ID # | Cal Date (Certificate No.) | Scheduled Calibration |
|---|---|---|---|
| Power meter NRP | SN: 104778 | 04-Apr-18 (No. 217-02672/02673) | Apr-19 |
| Power sensor NRP-Z91 | SN: 103244 | 04-Apr-18 (No. 217-02672) | Apr-19 |
| Power sensor NRP-Z91 | SN: 103245 | 04-Apr-18 (No. 217-02673) | Apr-19 |
| Reference 20 dB Attenuator | SN: 5058 (20k) | 04-Apr-18 (No. 217-02682) | Apr-19 |
| Type-N mismatch combination | SN: 5047.2 / 06327 | 04-Apr-18 (No. 217-02683) | Apr-19 |
| Reference Probe EX3DV4 | SN: 7349 | 30-Dec-17 (No. EX3-7349_Dec17) | Dec-18 |
| DAE4 | SN: 601 | 26-Oct-17 (No. DAE4-601_Oct17) | Oct-18 |

| Secondary Standards | ID # | Check Date (in house) | Scheduled Check |
|---|---|---|---|
| Power meter EPM-442A | SN: GB37480704 | 07-Oct-15 (in house check Oct-16) | In house check: Oct-18 |
| Power sensor HP 8481A | SN: US37292783 | 07-Oct-15 (in house check Oct-16) | In house check: Oct-18 |
| Power sensor HP 8481A | SN: MY41092317 | 07-Oct-15 (in house check Oct-16) | In house check: Oct-18 |
| RF generator R&S SMT-06 | SN: 100972 | 15-Jun-15 (in house check Oct-16) | In house check: Oct-18 |
| Network Analyzer Agilent E8358A | SN: US41080477 | 31-Mar-14 (in house check Oct-17) | In house check: Oct-18 |

| | Name | Function | Signature |
|---|---|---|---|
| Calibrated by: | Jeton Kastrati | Laboratory Technician | |
| Approved by: | Katja Pokovic | Technical Manager | |

Issued: September 27, 2018

This calibration certificate shall not be reproduced except in full without written approval of the laboratory.

## Glossary:

| | |
|---|---|
| TSL | tissue simulating liquid |
| ConvF | sensitivity in TSL / NORM x,y,z |
| N/A | not applicable or not measured |

## Calibration is Performed According to the Following Standards:

a) IEEE Std 1528-2013, "IEEE Recommended Practice for Determining the Peak Spatial-Averaged Specific Absorption Rate (SAR) in the Human Head from Wireless Communications Devices: Measurement Techniques", June 2013
b) IEC 62209-1, "Measurement procedure for the assessment of Specific Absorption Rate (SAR) from hand-held and body-mounted devices used next to the ear (frequency range of 300 MHz to 6 GHz)", July 2016
c) IEC 62209-2, "Procedure to determine the Specific Absorption Rate (SAR) for wireless communication devices used in close proximity to the human body (frequency range of 30 MHz to 6 GHz)", March 2010
d) KDB 865664, "SAR Measurement Requirements for 100 MHz to 6 GHz"

## Additional Documentation:

e) DASY4/5 System Handbook

## Methods Applied and Interpretation of Parameters:

- *Measurement Conditions:* Further details are available from the Validation Report at the end of the certificate. All figures stated in the certificate are valid at the frequency indicated.
- *Antenna Parameters with TSL:* The dipole is mounted with the spacer to position its feed point exactly below the center marking of the flat phantom section, with the arms oriented parallel to the body axis.
- *Feed Point Impedance and Return Loss:* These parameters are measured with the dipole positioned under the liquid filled phantom. The impedance stated is transformed from the measurement at the SMA connector to the feed point. The Return Loss ensures low reflected power. No uncertainty required.
- *Electrical Delay:* One-way delay between the SMA connector and the antenna feed point. No uncertainty required.
- *SAR measured:* SAR measured at the stated antenna input power.
- *SAR normalized:* SAR as measured, normalized to an input power of 1 W at the antenna connector.
- *SAR for nominal TSL parameters:* The measured TSL parameters are used to calculate the nominal SAR result.

The reported uncertainty of measurement is stated as the standard uncertainty of measurement multiplied by the coverage factor k=2, which for a normal distribution corresponds to a coverage probability of approximately 95%.

## Measurement Conditions

DASY system configuration, as far as not given on page 1.

| | | |
|---|---|---|
| **DASY Version** | DASY5 | V52.10.1 |
| **Extrapolation** | Advanced Extrapolation | |
| **Phantom** | Modular Flat Phantom | |
| **Distance Dipole Center - TSL** | 10 mm | with Spacer |
| **Zoom Scan Resolution** | dx, dy, dz = 5 mm | |
| **Frequency** | 2450 MHz ± 1 MHz | |

## Head TSL parameters

The following parameters and calculations were applied.

| | **Temperature** | **Permittivity** | **Conductivity** |
|---|---|---|---|
| **Nominal Head TSL parameters** | 22.0 °C | 39.2 | 1.80 mho/m |
| **Measured Head TSL parameters** | (22.0 ± 0.2) °C | 37.9 ± 6 % | 1.84 mho/m ± 6 % |
| **Head TSL temperature change during test** | < 0.5 °C | ---- | ---- |

## SAR result with Head TSL

| **SAR averaged over 1 $cm^3$ (1 g) of Head TSL** | Condition | |
|---|---|---|
| SAR measured | 250 mW input power | 13.1 W/kg |
| SAR for nominal Head TSL parameters | normalized to 1W | **51.5 W/kg ± 17.0 % (k=2)** |

| **SAR averaged over 10 $cm^3$ (10 g) of Head TSL** | condition | |
|---|---|---|
| SAR measured | 250 mW input power | 6.08 W/kg |
| SAR for nominal Head TSL parameters | normalized to 1W | **24.2 W/kg ± 16.5 % (k=2)** |

## Body TSL parameters

The following parameters and calculations were applied.

| | **Temperature** | **Permittivity** | **Conductivity** |
|---|---|---|---|
| **Nominal Body TSL parameters** | 22.0 °C | 52.7 | 1.95 mho/m |
| **Measured Body TSL parameters** | (22.0 ± 0.2) °C | 51.7 ± 6 % | 2.00 mho/m ± 6 % |
| **Body TSL temperature change during test** | < 0.5 °C | ---- | ---- |

## SAR result with Body TSL

| **SAR averaged over 1 $cm^3$ (1 g) of Body TSL** | Condition | |
|---|---|---|
| SAR measured | 250 mW input power | 13.0 W/kg |
| SAR for nominal Body TSL parameters | normalized to 1W | **51.2 W/kg ± 17.0 % (k=2)** |

| **SAR averaged over 10 $cm^3$ (10 g) of Body TSL** | condition | |
|---|---|---|
| SAR measured | 250 mW input power | 6.06 W/kg |
| SAR for nominal Body TSL parameters | normalized to 1W | **24.0 W/kg ± 16.5 % (k=2)** |

## Appendix (Additional assessments outside the scope of SCS 0108)

### Antenna Parameters with Head TSL

| | |
|---|---|
| Impedance, transformed to feed point | 53.4 Ω + 2.2 jΩ |
| Return Loss | - 28.2 dB |

### Antenna Parameters with Body TSL

| | |
|---|---|
| Impedance, transformed to feed point | 48.5 Ω + 5.3 jΩ |
| Return Loss | - 25.1 dB |

### General Antenna Parameters and Design

| | |
|---|---|
| Electrical Delay (one direction) | 1.160 ns |

After long term use with 100W radiated power, only a slight warming of the dipole near the feedpoint can be measured.

The dipole is made of standard semirigid coaxial cable. The center conductor of the feeding line is directly connected to the second arm of the dipole. The antenna is therefore short-circuited for DC-signals. On some of the dipoles, small end caps are added to the dipole arms in order to improve matching when loaded according to the position as explained in the "Measurement Conditions" paragraph. The SAR data are not affected by this change. The overall dipole length is still according to the Standard.
No excessive force must be applied to the dipole arms, because they might bend or the soldered connections near the feedpoint may be damaged.

### Additional EUT Data

| | |
|---|---|
| Manufactured by | SPEAG |
| Manufactured on | October 06, 2011 |

## DASY5 Validation Report for Head TSL

Date: 27.09.2018

Test Laboratory: SPEAG, Zurich, Switzerland

**DUT: Dipole 2450 MHz; Type: D2450V2; Serial: D2450V2 - SN:888**

Communication System: UID 0 - CW; Frequency: 2450 MHz
Medium parameters used: f = 2450 MHz; $\sigma$ = 1.84 S/m; $\varepsilon_r$ = 37.9; $\rho$ = 1000 kg/m$^3$
Phantom section: Flat Section
Measurement Standard: DASY5 (IEEE/IEC/ANSI C63.19-2011)

DASY52 Configuration:

- Probe: EX3DV4 - SN7349; ConvF(7.88, 7.88, 7.88) @ 2450 MHz; Calibrated: 30.12.2017
- Sensor-Surface: 1.4mm (Mechanical Surface Detection)
- Electronics: DAE4 Sn601; Calibrated: 26.10.2017
- Phantom: Flat Phantom 5.0 (front); Type: QD 000 P50 AA; Serial: 1001
- DASY52 52.10.1(1476); SEMCAD X 14.6.11(7439)

### Dipole Calibration for Head Tissue/Pin=250 mW, d=10mm/Zoom Scan (7x7x7)/Cube 0:

Measurement grid: dx=5mm, dy=5mm, dz=5mm
Reference Value = 116.9 V/m; Power Drift = -0.06 dB
Peak SAR (extrapolated) = 26.3 W/kg
**SAR(1 g) = 13.1 W/kg; SAR(10 g) = 6.08 W/kg**
Maximum value of SAR (measured) = 21.8 W/kg

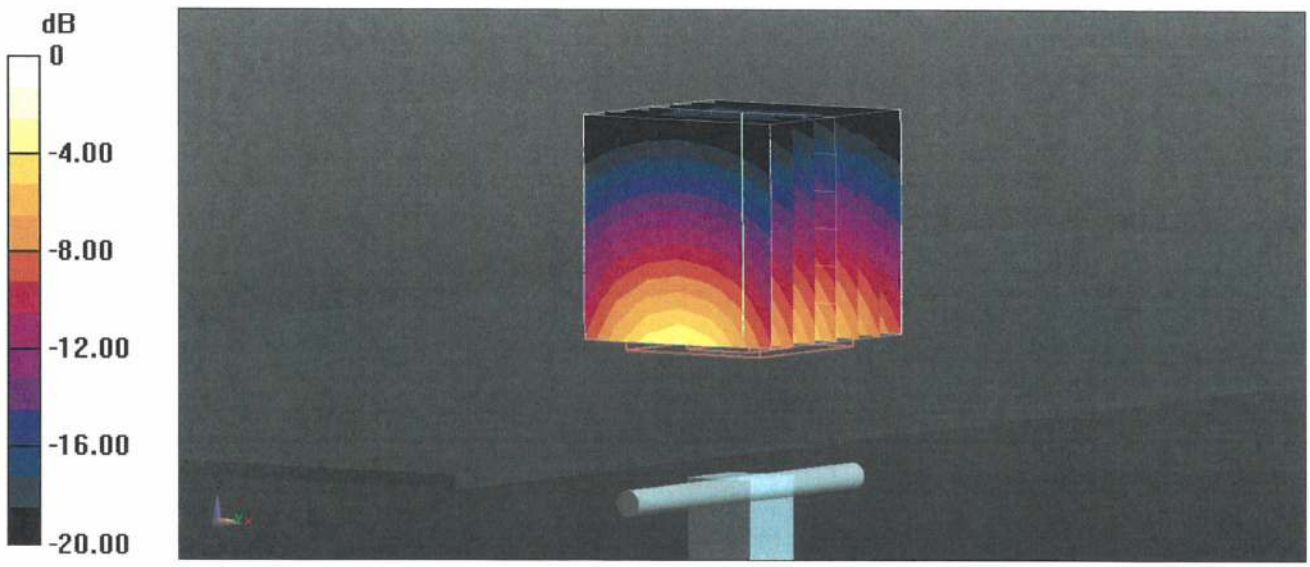


0 dB = 21.8 W/kg = 13.38 dBW/kg

## Impedance Measurement Plot for Head TSL

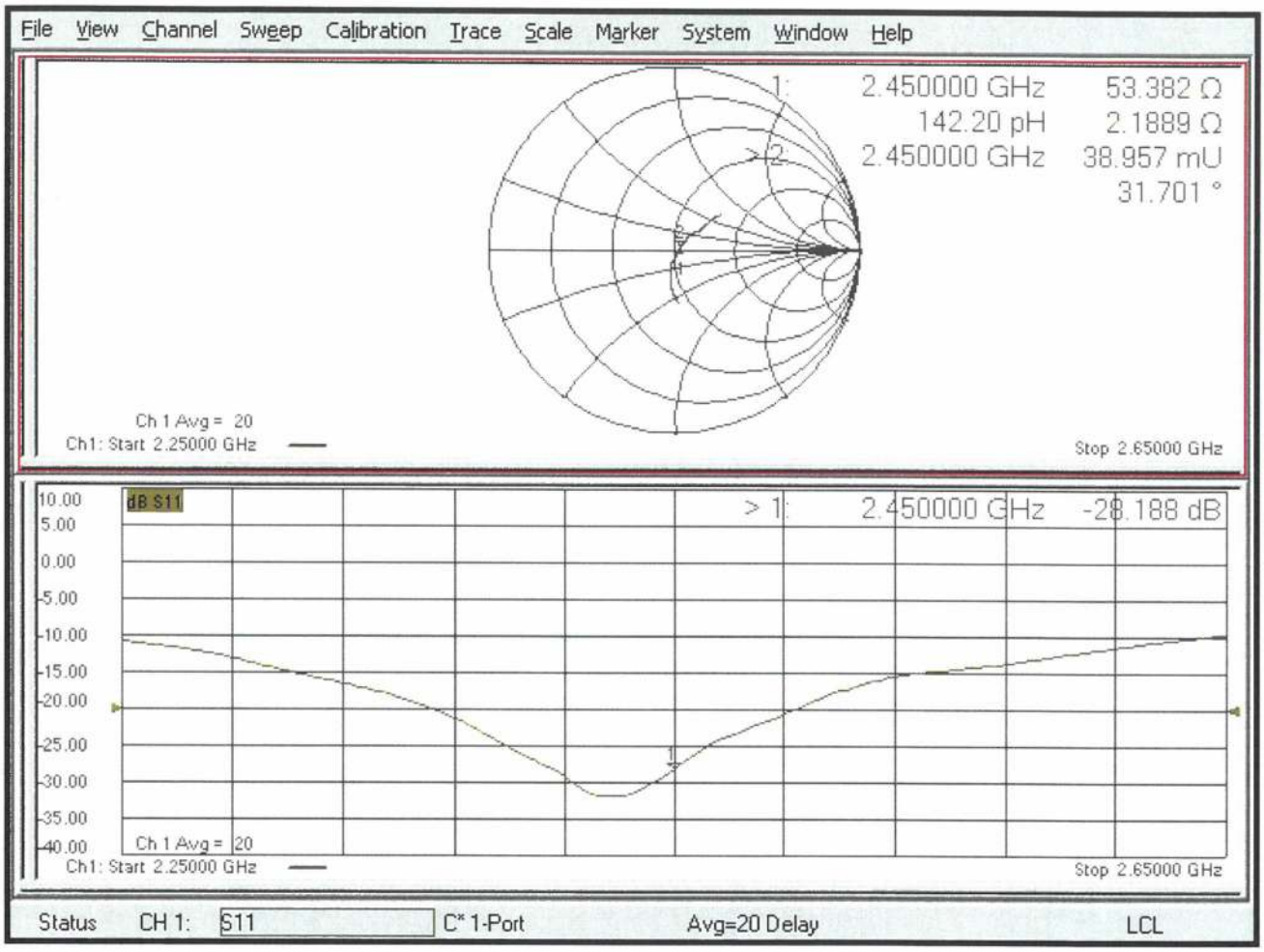

## DASY5 Validation Report for Body TSL

Date: 27.09.2018

Test Laboratory: SPEAG, Zurich, Switzerland

**DUT: Dipole 2450 MHz; Type: D2450V2; Serial: D2450V2 - SN:888**

Communication System: UID 0 - CW; Frequency: 2450 MHz
Medium parameters used: f = 2450 MHz; $\sigma$ = 2 S/m; $\varepsilon_r$ = 51.7; $\rho$ = 1000 kg/m$^3$
Phantom section: Flat Section
Measurement Standard: DASY5 (IEEE/IEC/ANSI C63.19-2011)

DASY52 Configuration:

- Probe: EX3DV4 - SN7349; ConvF(8.01, 8.01, 8.01) @ 2450 MHz; Calibrated: 30.12.2017
- Sensor-Surface: 1.4mm (Mechanical Surface Detection)
- Electronics: DAE4 Sn601; Calibrated: 26.10.2017
- Phantom: Flat Phantom 5.0 (back); Type: QD 000 P50 AA; Serial: 1002
- DASY52 52.10.1(1476); SEMCAD X 14.6.11(7439)

### Dipole Calibration for Body Tissue/Pin=250 mW, d=10mm/Zoom Scan (7x7x7)/Cube 0:

Measurement grid: dx=5mm, dy=5mm, dz=5mm
Reference Value = 109.1 V/m; Power Drift = 0.02 dB
Peak SAR (extrapolated) = 25.9 W/kg
**SAR(1 g) = 13 W/kg; SAR(10 g) = 6.06 W/kg**
Maximum value of SAR (measured) = 21.2 W/kg

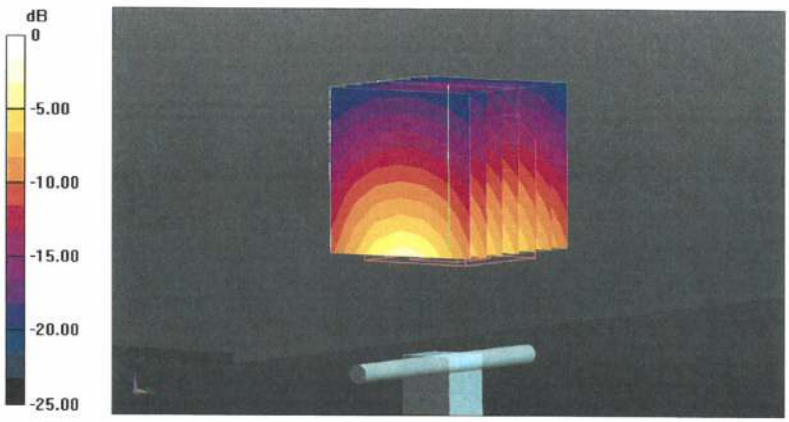


0 dB = 21.2 W/kg = 13.26 dBW/kg

## Impedance Measurement Plot for Body TSL

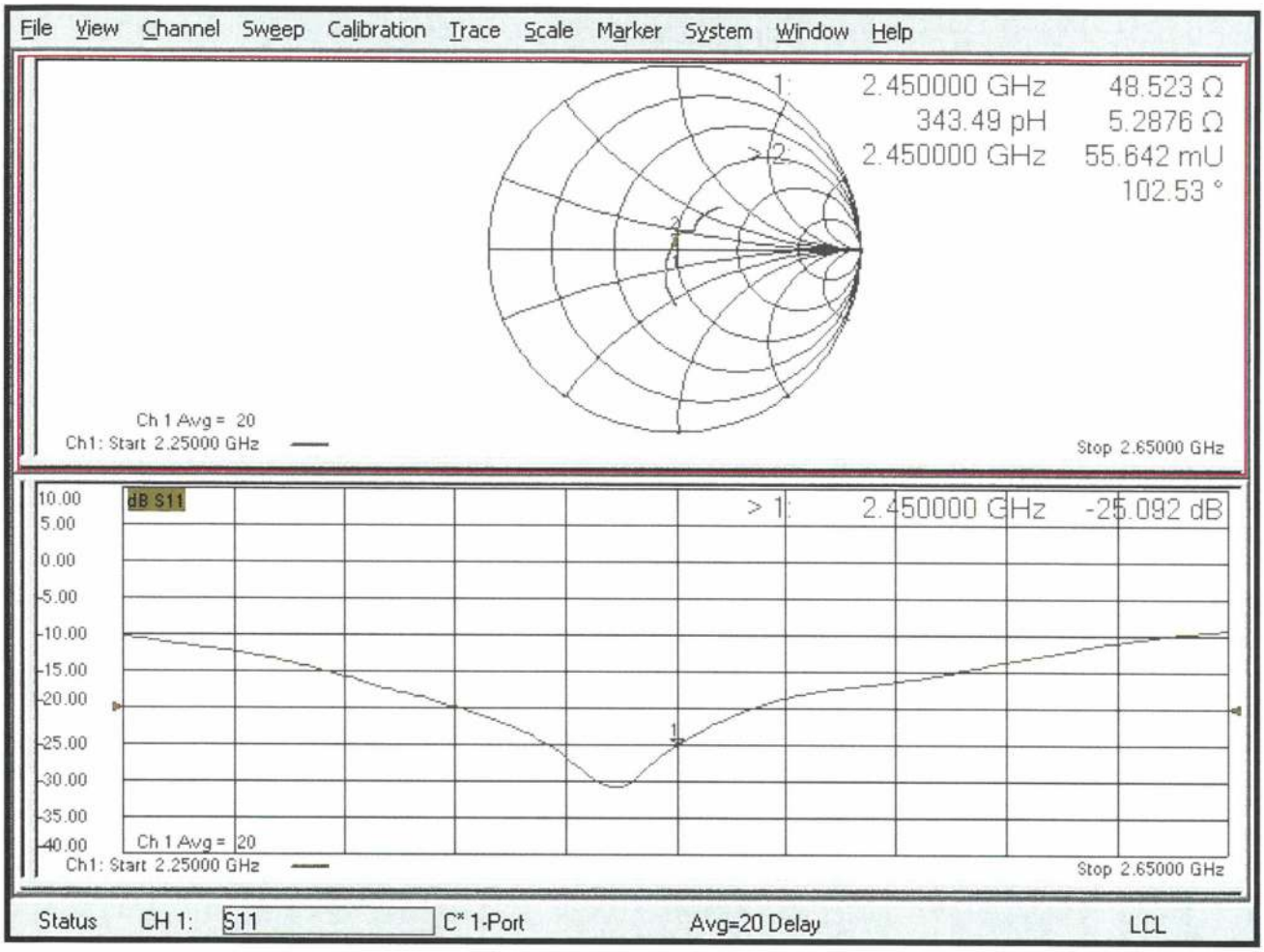

# Dipole Verified Data

## Model Name: D2450V2

## SN:888

Pursuant to KDB 865664 D01 V01r04 section 3.2.2 that the reference dipole calibration can be extended to 3 years if Lab. does a confirmation on return loss and impedance annually, and compliance with following conditions,

1. Return loss deviates by less than 20% from the previous measurement and have 20 dB minimum return-loss requirement
2. The real or imaginary parts of the impedance, measured at least annually, deviates by less than 5 Ω from the previous measurement.

Plot for Antenna Parameters with Body Tissue

## Antenna Parameters with Body Tissue

| Item | Verified on 9/27, 2019 | Original Cal. Result | Deviation |
|---|---|---|---|
| Impedance, transformed to feed point | **51.953Ω-16.029Ω** | **48.5Ω+5.3jΩ** | **< 5Ω** |
| Return Loss | **-22.554 dB** | **-25.1 dB** | **-10.14%** |

**Calibration Laboratory of**
Schmid & Partner
Engineering AG
**Zeughausstrasse 43, 8004 Zurich, Switzerland**

**S** Schweizerischer Kalibrierdienst
**C** Service suisse d'étalonnage
Servizio svizzero di taratura
**S** Swiss Calibration Service

Accredited by the Swiss Accreditation Service (SAS)
**The Swiss Accreditation Service is one of the signatories to the EA Multilateral Agreement for the recognition of calibration certificates**

**Accreditation No.: SCS 0108**

**Client** **AUDIX-TW (Auden)**

**Certificate No: D5GHzV2-1124_Sep18**

# CALIBRATION CERTIFICATE

| | |
|---|---|
| Object | D5GHzV2 - SN:1124 |
| Calibration procedure(s) | QA CAL-22.v3<br>Calibration procedure for dipole validation kits between 3-6 GHz |
| Calibration date: | September 27, 2018 |

This calibration certificate documents the traceability to national standards, which realize the physical units of measurements (SI).
The measurements and the uncertainties with confidence probability are given on the following pages and are part of the certificate.

All calibrations have been conducted in the closed laboratory facility: environment temperature (22 ± 3)°C and humidity < 70%.

Calibration Equipment used (M&TE critical for calibration)

| Primary Standards | ID # | Cal Date (Certificate No.) | Scheduled Calibration |
|---|---|---|---|
| Power meter NRP | SN: 104778 | 04-Apr-18 (No. 217-02672/02673) | Apr-19 |
| Power sensor NRP-Z91 | SN: 103244 | 04-Apr-18 (No. 217-02672) | Apr-19 |
| Power sensor NRP-Z91 | SN: 103245 | 04-Apr-18 (No. 217-02673) | Apr-19 |
| Reference 20 dB Attenuator | SN: 5058 (20k) | 04-Apr-18 (No. 217-02682) | Apr-19 |
| Type-N mismatch combination | SN: 5047.2 / 06327 | 04-Apr-18 (No. 217-02683) | Apr-19 |
| Reference Probe EX3DV4 | SN: 3503 | 30-Dec-17 (No. EX3-3503_Dec17) | Dec-18 |
| DAE4 | SN: 601 | 26-Oct-17 (No. DAE4-601_Oct17) | Oct-18 |

| Secondary Standards | ID # | Check Date (in house) | Scheduled Check |
|---|---|---|---|
| Power meter EPM-442A | SN: GB37480704 | 07-Oct-15 (in house check Oct-16) | In house check: Oct-18 |
| Power sensor HP 8481A | SN: US37292783 | 07-Oct-15 (in house check Oct-16) | In house check: Oct-18 |
| Power sensor HP 8481A | SN: MY41092317 | 07-Oct-15 (in house check Oct-16) | In house check: Oct-18 |
| RF generator R&S SMT-06 | SN: 100972 | 15-Jun-15 (in house check Oct-16) | In house check: Oct-18 |
| Network Analyzer Agilent E8358A | SN: US41080477 | 31-Mar-14 (in house check Oct-17) | In house check: Oct-18 |

| | Name | Function | Signature |
|---|---|---|---|
| Calibrated by: | Jeton Kastrati | Laboratory Technician | |
| Approved by: | Katja Pokovic | Technical Manager | |

Issued: September 27, 2018

This calibration certificate shall not be reproduced except in full without written approval of the laboratory.

## Glossary:

| | |
|---|---|
| TSL | tissue simulating liquid |
| ConvF | sensitivity in TSL / NORM x,y,z |
| N/A | not applicable or not measured |

## Calibration is Performed According to the Following Standards:

a) IEEE Std 1528-2013, "IEEE Recommended Practice for Determining the Peak Spatial-Averaged Specific Absorption Rate (SAR) in the Human Head from Wireless Communications Devices: Measurement Techniques", June 2013
b) IEC 62209-1, "Measurement procedure for the assessment of Specific Absorption Rate (SAR) from hand-held and body-mounted devices used next to the ear (frequency range of 300 MHz to 6 GHz)", July 2016
c) IEC 62209-2, "Procedure to determine the Specific Absorption Rate (SAR) for wireless communication devices used in close proximity to the human body (frequency range of 30 MHz to 6 GHz)", March 2010
d) KDB 865664, "SAR Measurement Requirements for 100 MHz to 6 GHz"

## Additional Documentation:

e) DASY4/5 System Handbook

## Methods Applied and Interpretation of Parameters:

- *Measurement Conditions:* Further details are available from the Validation Report at the end of the certificate. All figures stated in the certificate are valid at the frequency indicated.
- *Antenna Parameters with TSL:* The dipole is mounted with the spacer to position its feed point exactly below the center marking of the flat phantom section, with the arms oriented parallel to the body axis.
- *Feed Point Impedance and Return Loss:* These parameters are measured with the dipole positioned under the liquid filled phantom. The impedance stated is transformed from the measurement at the SMA connector to the feed point. The Return Loss ensures low reflected power. No uncertainty required.
- *Electrical Delay:* One-way delay between the SMA connector and the antenna feed point. No uncertainty required.
- *SAR measured:* SAR measured at the stated antenna input power.
- *SAR normalized:* SAR as measured, normalized to an input power of 1 W at the antenna connector.
- *SAR for nominal TSL parameters:* The measured TSL parameters are used to calculate the nominal SAR result.

The reported uncertainty of measurement is stated as the standard uncertainty of measurement multiplied by the coverage factor k=2, which for a normal distribution corresponds to a coverage probability of approximately 95%.

## Measurement Conditions

DASY system configuration, as far as not given on page 1.

| | | |
|---|---|---|
| **DASY Version** | DASY5 | V52.10.1 |
| **Extrapolation** | Advanced Extrapolation | |
| **Phantom** | Modular Flat Phantom V5.0 | |
| **Distance Dipole Center - TSL** | 10 mm | with Spacer |
| **Zoom Scan Resolution** | dx, dy = 4.0 mm, dz = 1.4 mm | Graded Ratio = 1.4 (Z direction) |
| **Frequency** | 5200 MHz ± 1 MHz<br>5300 MHz ± 1 MHz<br>5500 MHz ± 1 MHz<br>5600 MHz ± 1 MHz<br>5800 MHz ± 1 MHz | |

## Head TSL parameters at 5200 MHz

The following parameters and calculations were applied.

| | **Temperature** | **Permittivity** | **Conductivity** |
|---|---|---|---|
| **Nominal Head TSL parameters** | 22.0 °C | 36.0 | 4.66 mho/m |
| **Measured Head TSL parameters** | (22.0 ± 0.2) °C | 36.0 ± 6 % | 4.56 mho/m ± 6 % |
| **Head TSL temperature change during test** | < 0.5 °C | ---- | ---- |

## SAR result with Head TSL at 5200 MHz

| **SAR averaged over 1 $cm^3$ (1 g) of Head TSL** | Condition | |
|---|---|---|
| SAR measured | 100 mW input power | 8.01 W/kg |
| SAR for nominal Head TSL parameters | normalized to 1W | **80.1 W/kg ± 19.9 % (k=2)** |

| **SAR averaged over 10 $cm^3$ (10 g) of Head TSL** | condition | |
|---|---|---|
| SAR measured | 100 mW input power | 2.29 W/kg |
| SAR for nominal Head TSL parameters | normalized to 1W | **22.9 W/kg ± 19.5 % (k=2)** |

## Head TSL parameters at 5300 MHz

The following parameters and calculations were applied.

| | Temperature | Permittivity | Conductivity |
|---|---|---|---|
| **Nominal Head TSL parameters** | 22.0 °C | 35.9 | 4.76 mho/m |
| **Measured Head TSL parameters** | (22.0 ± 0.2) °C | 35.9 ± 6 % | 4.66 mho/m ± 6 % |
| **Head TSL temperature change during test** | < 0.5 °C | ---- | ---- |

## SAR result with Head TSL at 5300 MHz

| **SAR averaged over 1 $cm^3$ (1 g) of Head TSL** | Condition | |
|---|---|---|
| SAR measured | 100 mW input power | 8.07 W/kg |
| SAR for nominal Head TSL parameters | normalized to 1W | **80.6 W / kg ± 19.9 % (k=2)** |

| **SAR averaged over 10 $cm^3$ (10 g) of Head TSL** | condition | |
|---|---|---|
| SAR measured | 100 mW input power | 2.33 W/kg |
| SAR for nominal Head TSL parameters | normalized to 1W | **23.3 W/kg ± 19.5 % (k=2)** |

## Head TSL parameters at 5500 MHz

The following parameters and calculations were applied.

| | Temperature | Permittivity | Conductivity |
|---|---|---|---|
| **Nominal Head TSL parameters** | 22.0 °C | 35.6 | 4.96 mho/m |
| **Measured Head TSL parameters** | (22.0 ± 0.2) °C | 35.6 ± 6 % | 4.88 mho/m ± 6 % |
| **Head TSL temperature change during test** | < 0.5 °C | ---- | ---- |

## SAR result with Head TSL at 5500 MHz

| **SAR averaged over 1 $cm^3$ (1 g) of Head TSL** | Condition | |
|---|---|---|
| SAR measured | 100 mW input power | 8.40 W/kg |
| SAR for nominal Head TSL parameters | normalized to 1W | **83.9 W/kg ± 19.9 % (k=2)** |

| **SAR averaged over 10 $cm^3$ (10 g) of Head TSL** | condition | |
|---|---|---|
| SAR measured | 100 mW input power | 2.39 W/kg |
| SAR for nominal Head TSL parameters | normalized to 1W | **23.9 W/kg ± 19.5 % (k=2)** |

## Head TSL parameters at 5600 MHz

The following parameters and calculations were applied.

| | Temperature | Permittivity | Conductivity |
|---|---|---|---|
| **Nominal Head TSL parameters** | 22.0 °C | 35.5 | 5.07 mho/m |
| **Measured Head TSL parameters** | (22.0 ± 0.2) °C | 35.4 ± 6 % | 4.98 mho/m ± 6 % |
| **Head TSL temperature change during test** | < 0.5 °C | ---- | ---- |

## SAR result with Head TSL at 5600 MHz

| **SAR averaged over 1 $cm^3$ (1 g) of Head TSL** | Condition | |
|---|---|---|
| SAR measured | 100 mW input power | 8.54 W/kg |
| SAR for nominal Head TSL parameters | normalized to 1W | **85.3 W/kg ± 19.9 % (k=2)** |

| **SAR averaged over 10 $cm^3$ (10 g) of Head TSL** | condition | |
|---|---|---|
| SAR measured | 100 mW input power | 2.44 W/kg |
| SAR for nominal Head TSL parameters | normalized to 1W | **24.4 W/kg ± 19.5 % (k=2)** |

## Head TSL parameters at 5800 MHz

The following parameters and calculations were applied.

| | Temperature | Permittivity | Conductivity |
|---|---|---|---|
| **Nominal Head TSL parameters** | 22.0 °C | 35.3 | 5.27 mho/m |
| **Measured Head TSL parameters** | (22.0 ± 0.2) °C | 35.2 ± 6 % | 5.19 mho/m ± 6 % |
| **Head TSL temperature change during test** | < 0.5 °C | ---- | ---- |

## SAR result with Head TSL at 5800 MHz

| **SAR averaged over 1 $cm^3$ (1 g) of Head TSL** | Condition | |
|---|---|---|
| SAR measured | 100 mW input power | 7.97 W/kg |
| SAR for nominal Head TSL parameters | normalized to 1W | **79.6 W/kg ± 19.9 % (k=2)** |

| **SAR averaged over 10 $cm^3$ (10 g) of Head TSL** | condition | |
|---|---|---|
| SAR measured | 100 mW input power | 2.28 W/kg |
| SAR for nominal Head TSL parameters | normalized to 1W | **22.8 W/kg ± 19.5 % (k=2)** |

## Body TSL parameters at 5200 MHz

The following parameters and calculations were applied.

| | Temperature | Permittivity | Conductivity |
|---|---|---|---|
| **Nominal Body TSL parameters** | 22.0 °C | 49.0 | 5.30 mho/m |
| **Measured Body TSL parameters** | (22.0 ± 0.2) °C | 46.9 ± 6 % | 5.39 mho/m ± 6 % |
| **Body TSL temperature change during test** | < 0.5 °C | ---- | ---- |

## SAR result with Body TSL at 5200 MHz

| **SAR averaged over 1 $cm^3$ (1 g) of Body TSL** | Condition | |
|---|---|---|
| SAR measured | 100 mW input power | 7.43 W/kg |
| SAR for nominal Body TSL parameters | normalized to 1W | **73.7 W/kg ± 19.9 % (k=2)** |

| **SAR averaged over 10 $cm^3$ (10 g) of Body TSL** | condition | |
|---|---|---|
| SAR measured | 100 mW input power | 2.07 W/kg |
| SAR for nominal Body TSL parameters | normalized to 1W | **20.5 W/kg ± 19.5 % (k=2)** |

## Body TSL parameters at 5300 MHz

The following parameters and calculations were applied.

| | Temperature | Permittivity | Conductivity |
|---|---|---|---|
| **Nominal Body TSL parameters** | 22.0 °C | 48.9 | 5.42 mho/m |
| **Measured Body TSL parameters** | (22.0 ± 0.2) °C | 46.8 ± 6 % | 5.53 mho/m ± 6 % |
| **Body TSL temperature change during test** | < 0.5 °C | ---- | ---- |

## SAR result with Body TSL at 5300 MHz

| **SAR averaged over 1 $cm^3$ (1 g) of Body TSL** | Condition | |
|---|---|---|
| SAR measured | 100 mW input power | 7.75 W/kg |
| SAR for nominal Body TSL parameters | normalized to 1W | **76.9 W/kg ± 19.9 % (k=2)** |

| **SAR averaged over 10 $cm^3$ (10 g) of Body TSL** | condition | |
|---|---|---|
| SAR measured | 100 mW input power | 2.17 W/kg |
| SAR for nominal Body TSL parameters | normalized to 1W | **21.5 W/kg ± 19.5 % (k=2)** |

## Body TSL parameters at 5500 MHz

The following parameters and calculations were applied.

| | Temperature | Permittivity | Conductivity |
|---|---|---|---|
| **Nominal Body TSL parameters** | 22.0 °C | 48.6 | 5.65 mho/m |
| **Measured Body TSL parameters** | (22.0 ± 0.2) °C | 46.4 ± 6 % | 5.79 mho/m ± 6 % |
| **Body TSL temperature change during test** | < 0.5 °C | ---- | ---- |

## SAR result with Body TSL at 5500 MHz

| **SAR averaged over 1 $cm^3$ (1 g) of Body TSL** | Condition | |
|---|---|---|
| SAR measured | 100 mW input power | 8.14 W/kg |
| SAR for nominal Body TSL parameters | normalized to 1W | **80.7 W/kg ± 19.9 % (k=2)** |

| **SAR averaged over 10 $cm^3$ (10 g) of Body TSL** | condition | |
|---|---|---|
| SAR measured | 100 mW input power | 2.25 W/kg |
| SAR for nominal Body TSL parameters | normalized to 1W | **22.3 W/kg ± 19.5 % (k=2)** |

## Body TSL parameters at 5600 MHz

The following parameters and calculations were applied.

| | Temperature | Permittivity | Conductivity |
|---|---|---|---|
| **Nominal Body TSL parameters** | 22.0 °C | 48.5 | 5.77 mho/m |
| **Measured Body TSL parameters** | (22.0 ± 0.2) °C | 46.3 ± 6 % | 5.93 mho/m ± 6 % |
| **Body TSL temperature change during test** | < 0.5 °C | ---- | ---- |

## SAR result with Body TSL at 5600 MHz

| **SAR averaged over 1 $cm^3$ (1 g) of Body TSL** | Condition | |
|---|---|---|
| SAR measured | 100 mW input power | 8.13 W/kg |
| SAR for nominal Body TSL parameters | normalized to 1W | **80.6 W/kg ± 19.9 % (k=2)** |

| **SAR averaged over 10 $cm^3$ (10 g) of Body TSL** | condition | |
|---|---|---|
| SAR measured | 100 mW input power | 2.26 W/kg |
| SAR for nominal Body TSL parameters | normalized to 1W | **22.4 W/kg ± 19.5 % (k=2)** |

## Body TSL parameters at 5800 MHz

The following parameters and calculations were applied.

| | Temperature | Permittivity | Conductivity |
|---|---|---|---|
| **Nominal Body TSL parameters** | 22.0 °C | 48.2 | 6.00 mho/m |
| **Measured Body TSL parameters** | (22.0 ± 0.2) °C | 45.9 ± 6 % | 6.21 mho/m ± 6 % |
| **Body TSL temperature change during test** | < 0.5 °C | ---- | ---- |

## SAR result with Body TSL at 5800 MHz

| **SAR averaged over 1 $cm^3$ (1 g) of Body TSL** | Condition | |
|---|---|---|
| SAR measured | 100 mW input power | 7.78 W/kg |
| SAR for nominal Body TSL parameters | normalized to 1W | **77.1 W/kg ± 19.9 % (k=2)** |

| **SAR averaged over 10 $cm^3$ (10 g) of Body TSL** | condition | |
|---|---|---|
| SAR measured | 100 mW input power | 2.15 W/kg |
| SAR for nominal Body TSL parameters | normalized to 1W | **21.2 W/kg ± 19.5 % (k=2)** |

## Appendix (Additional assessments outside the scope of SCS 0108)

### Antenna Parameters with Head TSL at 5200 MHz

| | |
|---|---|
| Impedance, transformed to feed point | 50.5 Ω - 3.8 jΩ |
| Return Loss | - 28.4 dB |

### Antenna Parameters with Head TSL at 5300 MHz

| | |
|---|---|
| Impedance, transformed to feed point | 50.1 Ω - 2.8 jΩ |
| Return Loss | - 31.1 dB |

### Antenna Parameters with Head TSL at 5500 MHz

| | |
|---|---|
| Impedance, transformed to feed point | 53.3 Ω + 1.3 jΩ |
| Return Loss | - 29.3 dB |

### Antenna Parameters with Head TSL at 5600 MHz

| | |
|---|---|
| Impedance, transformed to feed point | 54.6 Ω + 4.4 jΩ |
| Return Loss | - 24.4 dB |

### Antenna Parameters with Head TSL at 5800 MHz

| | |
|---|---|
| Impedance, transformed to feed point | 57.2 Ω - 0.9 jΩ |
| Return Loss | - 23.4 dB |

### Antenna Parameters with Body TSL at 5200 MHz

| | |
|---|---|
| Impedance, transformed to feed point | 49.7 Ω - 5.1 jΩ |
| Return Loss | - 25.8 dB |

### Antenna Parameters with Body TSL at 5300 MHz

| | |
|---|---|
| Impedance, transformed to feed point | 52.4 Ω - 1.0 jΩ |
| Return Loss | - 31.9 dB |

### Antenna Parameters with Body TSL at 5500 MHz

| | |
|---|---|
| Impedance, transformed to feed point | 52.4 Ω + 3.3 jΩ |
| Return Loss | - 28.0 dB |

## Antenna Parameters with Body TSL at 5600 MHz

| | |
|---|---|
| Impedance, transformed to feed point | 54.4 Ω + 5.4 jΩ |
| Return Loss | - 23.5 dB |

## Antenna Parameters with Body TSL at 5800 MHz

| | |
|---|---|
| Impedance, transformed to feed point | 56.3 Ω + 2.6 jΩ |
| Return Loss | - 23.9 dB |

## General Antenna Parameters and Design

| | |
|---|---|
| Electrical Delay (one direction) | 1.207 ns |

After long term use with 100W radiated power, only a slight warming of the dipole near the feedpoint can be measured.

The dipole is made of standard semirigid coaxial cable. The center conductor of the feeding line is directly connected to the second arm of the dipole. The antenna is therefore short-circuited for DC-signals. On some of the dipoles, small end caps are added to the dipole arms in order to improve matching when loaded according to the position as explained in the "Measurement Conditions" paragraph. The SAR data are not affected by this change. The overall dipole length is still according to the Standard.
No excessive force must be applied to the dipole arms, because they might bend or the soldered connections near the feedpoint may be damaged.

## Additional EUT Data

| | |
|---|---|
| Manufactured by | SPEAG |
| Manufactured on | September 08, 2011 |

## DASY5 Validation Report for Head TSL

Date: 27.09.2018

Test Laboratory: SPEAG, Zurich, Switzerland

### DUT: Dipole D5GHzV2; Type: D5GHzV2; Serial: D5GHzV2 - SN:1124

Communication System: UID 0 - CW; Frequency: 5200 MHz, Frequency: 5300 MHz, Frequency: 5500 MHz, Frequency: 5600 MHz, Frequency: 5800 MHz
Medium parameters used: f = 5200 MHz; $\sigma$ = 4.56 S/m; $\varepsilon_r$ = 36; $\rho$ = 1000 kg/m$^3$ ,
Medium parameters used: f = 5300 MHz; $\sigma$ = 4.66 S/m; $\varepsilon_r$ = 35.9; $\rho$ = 1000 kg/m$^3$ ,
Medium parameters used: f = 5500 MHz; $\sigma$ = 4.88 S/m; $\varepsilon_r$ = 35.6; $\rho$ = 1000 kg/m$^3$ ,
Medium parameters used: f = 5600 MHz; $\sigma$ = 4.98 S/m; $\varepsilon_r$ = 35.4; $\rho$ = 1000 kg/m$^3$ ,
Medium parameters used: f = 5800 MHz; $\sigma$ = 5.19 S/m; $\varepsilon_r$ = 35.2; $\rho$ = 1000 kg/m$^3$
Phantom section: Flat Section
Measurement Standard: DASY5 (IEEE/IEC/ANSI C63.19-2011)

DASY52 Configuration:

- Probe: EX3DV4 - SN3503; ConvF(5.75, 5.75, 5.75) @ 5200 MHz, ConvF(5.5, 5.5, 5.5) @ 5300 MHz, ConvF(5.2, 5.2, 5.2) @ 5500 MHz, ConvF(5.05, 5.05, 5.05) @ 5600 MHz, ConvF(4.96, 4.96, 4.96) @ 5800 MHz; Calibrated: 30.12.2017
- Sensor-Surface: 1.4mm (Mechanical Surface Detection)
- Electronics: DAE4 Sn601; Calibrated: 26.10.2017
- Phantom: Flat Phantom 5.0 (front); Type: QD 000 P50 AA; Serial: 1001
- DASY52 52.10.1(1476); SEMCAD X 14.6.11(7439)

**Dipole Calibration for Head Tissue/Pin=100mW, dist=10mm, f=5200 MHz/Zoom Scan, dist=1.4mm (8x8x7)/Cube 0:** Measurement grid: dx=4mm, dy=4mm, dz=1.4mm
Reference Value = 75.80 V/m; Power Drift = -0.06 dB
Peak SAR (extrapolated) = 27.2 W/kg
**SAR(1 g) = 8.01 W/kg; SAR(10 g) = 2.29 W/kg**
Maximum value of SAR (measured) = 18.0 W/kg

**Dipole Calibration for Head Tissue/Pin=100mW, dist=10mm, f=5300 MHz/Zoom Scan, dist=1.4mm (8x8x7)/Cube 0:** Measurement grid: dx=4mm, dy=4mm, dz=1.4mm
Reference Value = 75.75 V/m; Power Drift = -0.09 dB
Peak SAR (extrapolated) = 27.8 W/kg
**SAR(1 g) = 8.07 W/kg; SAR(10 g) = 2.33 W/kg**
Maximum value of SAR (measured) = 18.4 W/kg

**Dipole Calibration for Head Tissue/Pin=100mW, dist=10mm, f=5500 MHz/Zoom Scan, dist=1.4mm (8x8x7)/Cube 0:** Measurement grid: dx=4mm, dy=4mm, dz=1.4mm
Reference Value = 75.84 V/m; Power Drift = -0.07 dB
Peak SAR (extrapolated) = 31.3 W/kg
**SAR(1 g) = 8.4 W/kg; SAR(10 g) = 2.39 W/kg**
Maximum value of SAR (measured) = 19.9 W/kg

**Dipole Calibration for Head Tissue/Pin=100mW, dist=10mm, f=5600 MHz/Zoom Scan, dist=1.4mm (8x8x7)/Cube 0:** Measurement grid: dx=4mm, dy=4mm, dz=1.4mm
Reference Value = 76.67 V/m; Power Drift = -0.05 dB
Peak SAR (extrapolated) = 31.4 W/kg
**SAR(1 g) = 8.54 W/kg; SAR(10 g) = 2.44 W/kg**
Maximum value of SAR (measured) = 20.2 W/kg

**Dipole Calibration for Head Tissue/Pin=100mW, dist=10mm, f=5800 MHz/Zoom Scan, dist=1.4mm (8x8x7)/Cube 0:** Measurement grid: dx=4mm, dy=4mm, dz=1.4mm
Reference Value = 73.92 V/m; Power Drift = -0.05 dB
Peak SAR (extrapolated) = 30.3 W/kg
**SAR(1 g) = 7.97 W/kg; SAR(10 g) = 2.28 W/kg**
Maximum value of SAR (measured) = 19.0 W/kg

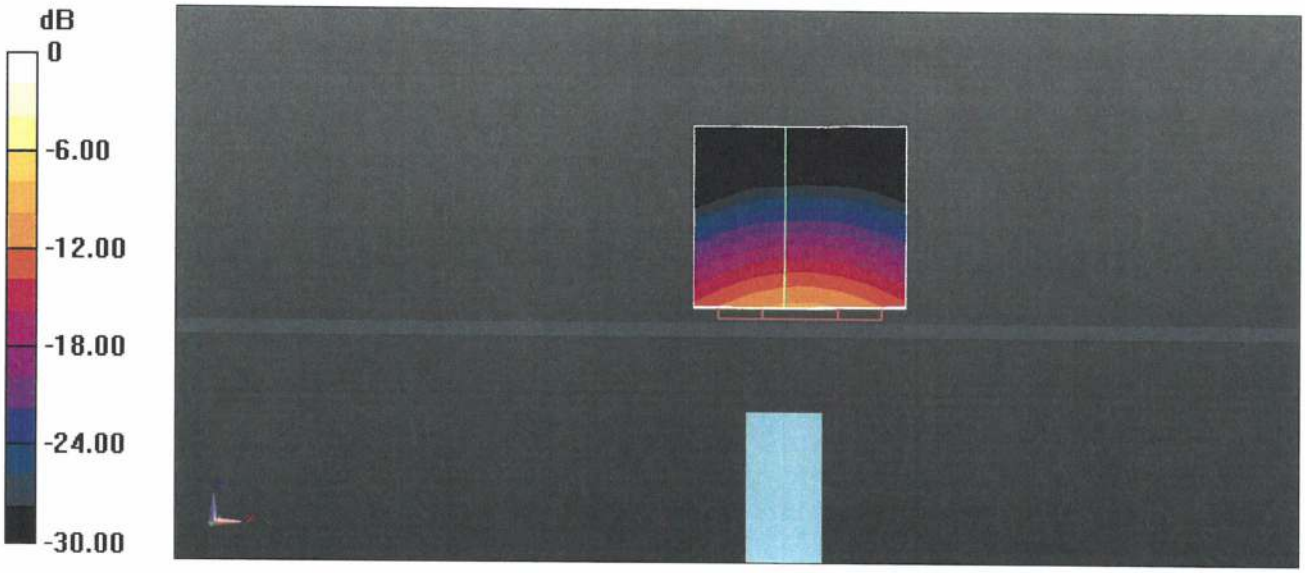

0 dB = 18.0 W/kg = 12.55 dBW/kg

## Impedance Measurement Plot for Head TSL

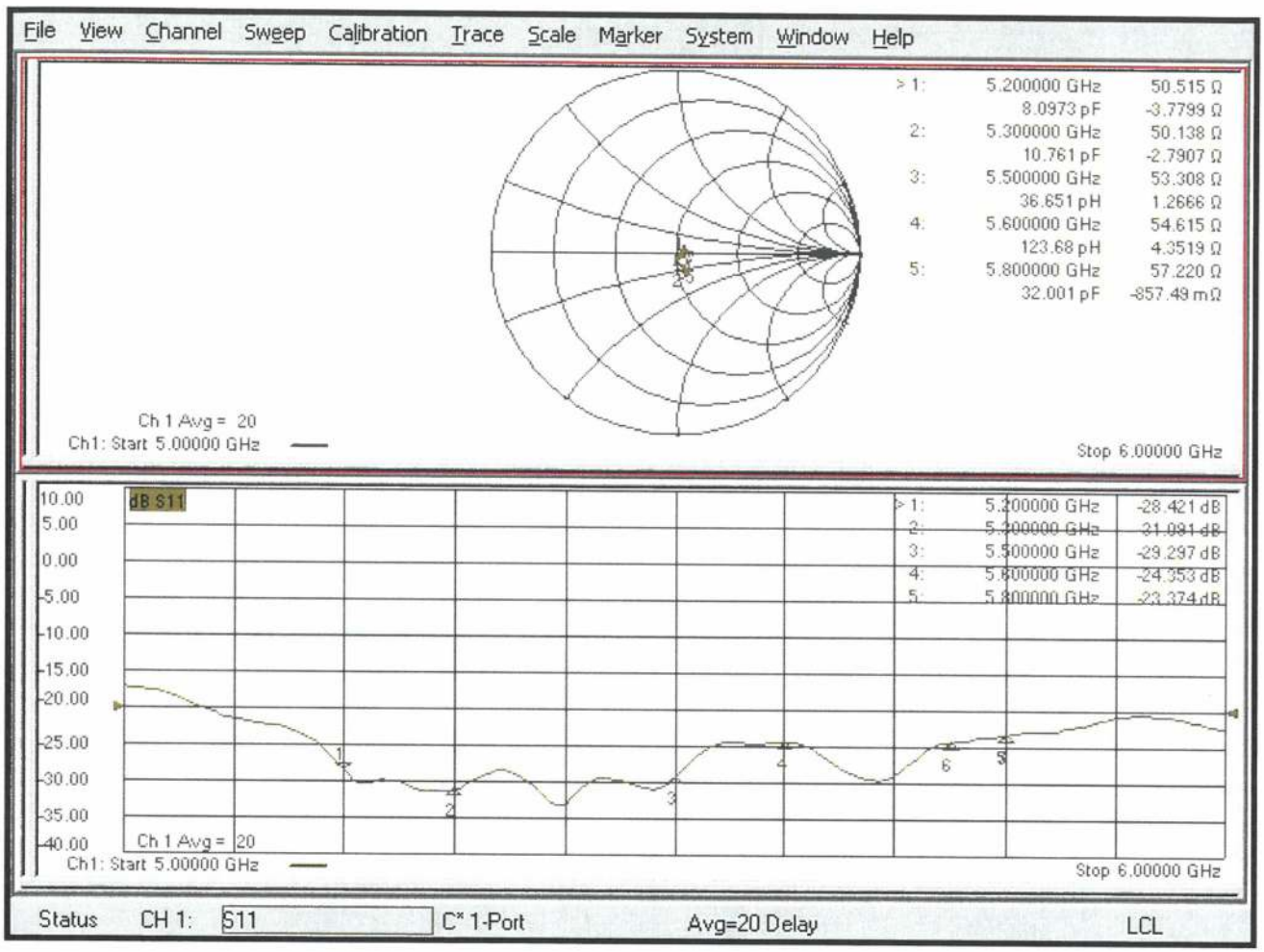

## DASY5 Validation Report for Body TSL

Date: 25.09.2018,

Test Laboratory: SPEAG, Zurich, Switzerland

### DUT: Dipole D5GHzV2; Type: D5GHzV2; Serial: D5GHzV2 - SN:1124

Communication System: UID 0 - CW; Frequency: 5200 MHz, Frequency: 5300 MHz, Frequency: 5500 MHz, Frequency: 5600 MHz, Frequency: 5800 MHz
Medium parameters used: f = 5200 MHz; $\sigma$ = 5.39 S/m; $\varepsilon_r$ = 46.9; $\rho$ = 1000 kg/m$^3$ ,
Medium parameters used: f = 5300 MHz; $\sigma$ = 5.53 S/m; $\varepsilon_r$ = 46.8; $\rho$ = 1000 kg/m$^3$ ,
Medium parameters used: f = 5500 MHz; $\sigma$ = 5.79 S/m; $\varepsilon_r$ = 46.4; $\rho$ = 1000 kg/m$^3$ ,
Medium parameters used: f = 5600 MHz; $\sigma$ = 5.93 S/m; $\varepsilon_r$ = 46.3; $\rho$ = 1000 kg/m$^3$ ,
Medium parameters used: f = 5800 MHz; $\sigma$ = 6.21 S/m; $\varepsilon_r$ = 45.9; $\rho$ = 1000 kg/m$^3$
Phantom section: Flat Section
Measurement Standard: DASY5 (IEEE/IEC/ANSI C63.19-2011)

DASY52 Configuration:

- Probe: EX3DV4 - SN3503; ConvF(5.35, 5.35, 5.35) @ 5200 MHz, ConvF(5.15, 5.15, 5.15) @ 5300 MHz, ConvF(4.7, 4.7, 4.7) @ 5500 MHz, ConvF(4.65, 4.65, 4.65) @ 5600 MHz, ConvF(4.53, 4.53, 4.53) @ 5800 MHz; Calibrated: 30.12.2017
- Sensor-Surface: 1.4mm (Mechanical Surface Detection)
- Electronics: DAE4 Sn601; Calibrated: 26.10.2017
- Phantom: Flat Phantom 5.0 (back); Type: QD 000 P50 AA; Serial: 1002
- DASY52 52.10.1(1476); SEMCAD X 14.6.11(7439)

**Dipole Calibration for Body Tissue/Pin=100mW, dist=10mm, f=5200 MHz/Zoom Scan, dist=1.4mm (8x8x7)/Cube 0:** Measurement grid: dx=4mm, dy=4mm, dz=1.4mm
Reference Value = 68.31 V/m; Power Drift = -0.02 dB
Peak SAR (extrapolated) = 27.9 W/kg
**SAR(1 g) = 7.43 W/kg; SAR(10 g) = 2.07 W/kg**
Maximum value of SAR (measured) = 17.4 W/kg

**Dipole Calibration for Body Tissue/Pin=100mW, dist=10mm, f=5300 MHz/Zoom Scan, dist=1.4mm (8x8x7)/Cube 0:** Measurement grid: dx=4mm, dy=4mm, dz=1.4mm
Reference Value = 68.42 V/m; Power Drift = -0.03 dB
Peak SAR (extrapolated) = 30.3 W/kg
**SAR(1 g) = 7.75 W/kg; SAR(10 g) = 2.17 W/kg**
Maximum value of SAR (measured) = 18.4 W/kg

**Dipole Calibration for Body Tissue/Pin=100mW, dist=10mm, f=5500 MHz/Zoom Scan, dist=1.4mm (8x8x7)/Cube 0:** Measurement grid: dx=4mm, dy=4mm, dz=1.4mm
Reference Value = 69.48 V/m; Power Drift = -0.01 dB
Peak SAR (extrapolated) = 33.5 W/kg
**SAR(1 g) = 8.14 W/kg; SAR(10 g) = 2.25 W/kg**
Maximum value of SAR (measured) = 19.5 W/kg

**Dipole Calibration for Body Tissue/Pin=100mW, dist=10mm, f=5600 MHz/Zoom Scan, dist=1.4mm (8x8x7)/Cube 0:** Measurement grid: dx=4mm, dy=4mm, dz=1.4mm
Reference Value = 69.28 V/m; Power Drift = -0.04 dB
Peak SAR (extrapolated) = 34.2 W/kg
**SAR(1 g) = 8.13 W/kg; SAR(10 g) = 2.26 W/kg**
Maximum value of SAR (measured) = 19.8 W/kg

**Dipole Calibration for Body Tissue/Pin=100mW, dist=10mm, f=5800 MHz/Zoom Scan, dist=1.4mm (8x8x7)/Cube 0:** Measurement grid: dx=4mm, dy=4mm, dz=1.4mm
Reference Value = 67.16 V/m; Power Drift = -0.03 dB
Peak SAR (extrapolated) = 33.9 W/kg
**SAR(1 g) = 7.78 W/kg; SAR(10 g) = 2.15 W/kg**
Maximum value of SAR (measured) = 19.2 W/kg

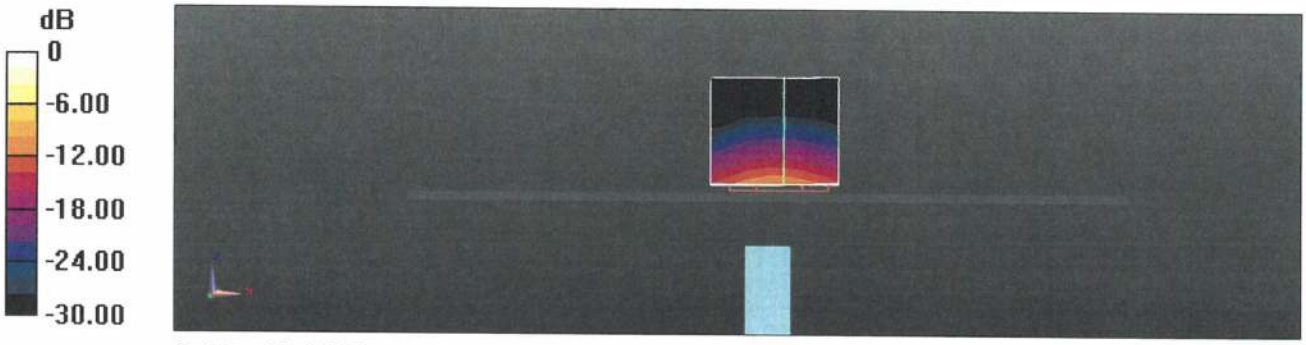

0 dB = 17.4 W/kg = 12.41 dBW/kg

## Impedance Measurement Plot for Body TSL

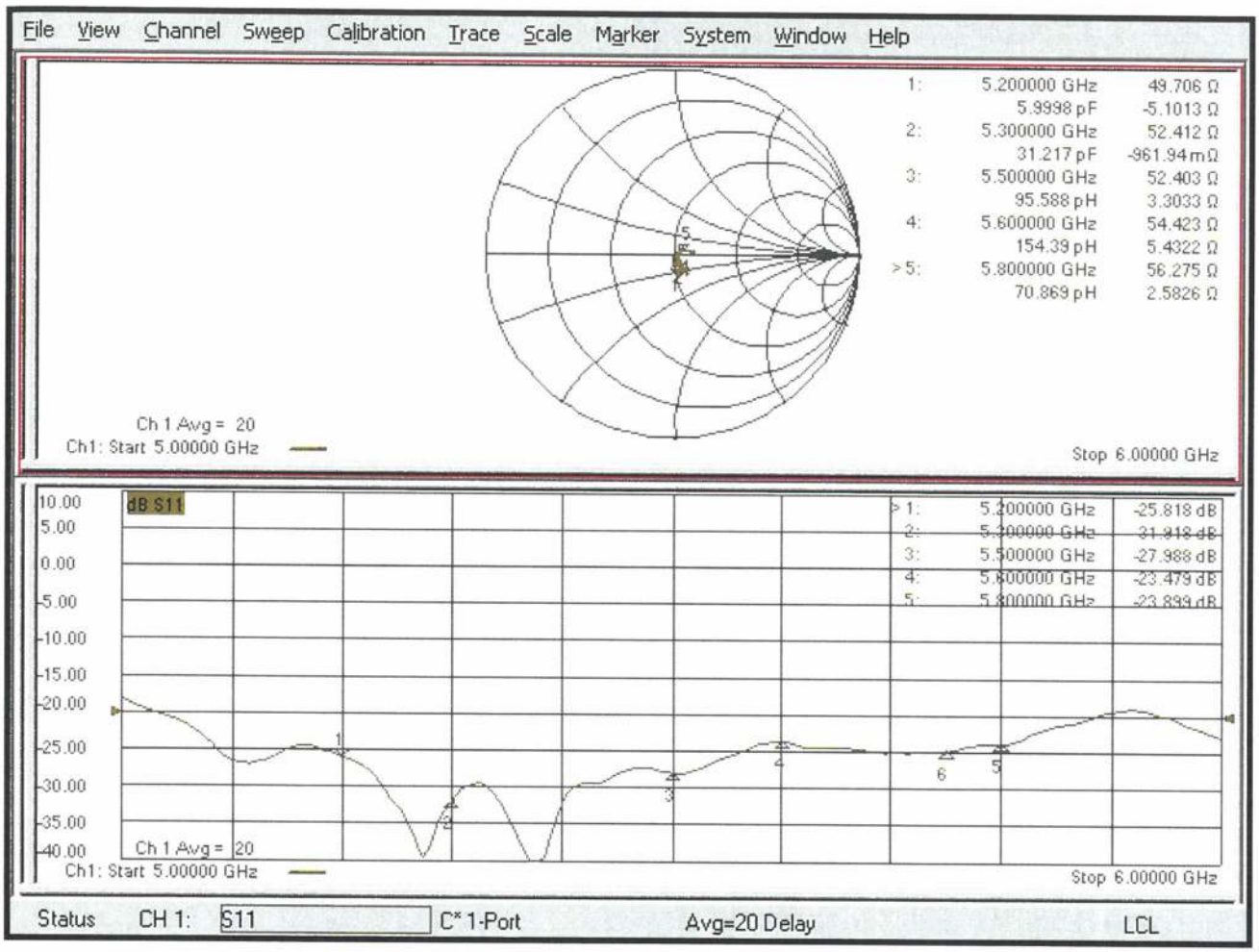

# Dipole Verified Data

## Model Name: D5GHzV2

## SN:1124

Pursuant to KDB 865664 D01 V01r04 section 3.2.2 that the reference dipole calibration can be extended to 3 years if Lab. does a confirmation on return loss and impedance annually, and compliance with following conditions,

1. Return loss deviates by less than 20% from the previous measurement and have 20 dB minimum return-loss requirement
2. The real or imaginary parts of the impedance, measured at least annually, deviates by less than 5 Ω from the previous measurement.

## Antenna Parameters with Body Tissue 5200 MHz

| Item | Verified on 9/27, 2019 | Original Cal. Result | Deviation |
|---|---|---|---|
| Impedance, transformed to feed point | **45.442Ω-6.1204Ω** | **49.7Ω-5.1jΩ** | **< 5Ω** |
| Return Loss | **-23.512 dB** | **-25.8 dB** | **-8.87%** |

## Antenna Parameters with Body Tissue 5300 MHz

| Item | Verified on 9/27, 2019 | Original Cal. Result | Deviation |
|---|---|---|---|
| Impedance, transformed to feed point | **49.326Ω+5.9689Ω** | **52.4Ω-1.0jΩ** | **< 5Ω** |
| Return Loss | **-29.107 dB** | **-31.9 dB** | **-8.76%** |

## Antenna Parameters with Body Tissue 5500 MHz

| Item | Verified on 9/27, 2019 | Original Cal. Result | Deviation |
|---|---|---|---|
| Impedance, transformed to feed point | **51.329Ω-3.5768Ω** | **52.4Ω+3.3jΩ** | **< 5Ω** |
| Return Loss | **-27.428 dB** | **-28 dB** | **-2.04%** |

## Antenna Parameters with Body Tissue 5600 MHz

| Item | Verified on 9/27, 2019 | Original Cal. Result | Deviation |
|---|---|---|---|
| Impedance, transformed to feed point | **56.217 Ω +916.30m Ω** | **54.4 Ω +5.4j Ω** | **< 5 Ω** |
| Return Loss | **-24.798 dB** | **-23.5 dB** | **5.52%** |

## Antenna Parameters with Body Tissue 5800 MHz

| Item | Verified on 9/13, 2014 | Original Cal. Result | Deviation |
|---|---|---|---|
| Impedance, transformed to feed point | **55.052 Ω −2.4744 Ω** | **56.3 Ω +2.6j Ω** | **< 5 Ω** |
| Return Loss | **-21.381 dB** | **-23.9 dB** | **-10.54%** |

Plot for Antenna Parameters with Body Tissue 5200 MHz& 5300 MHz

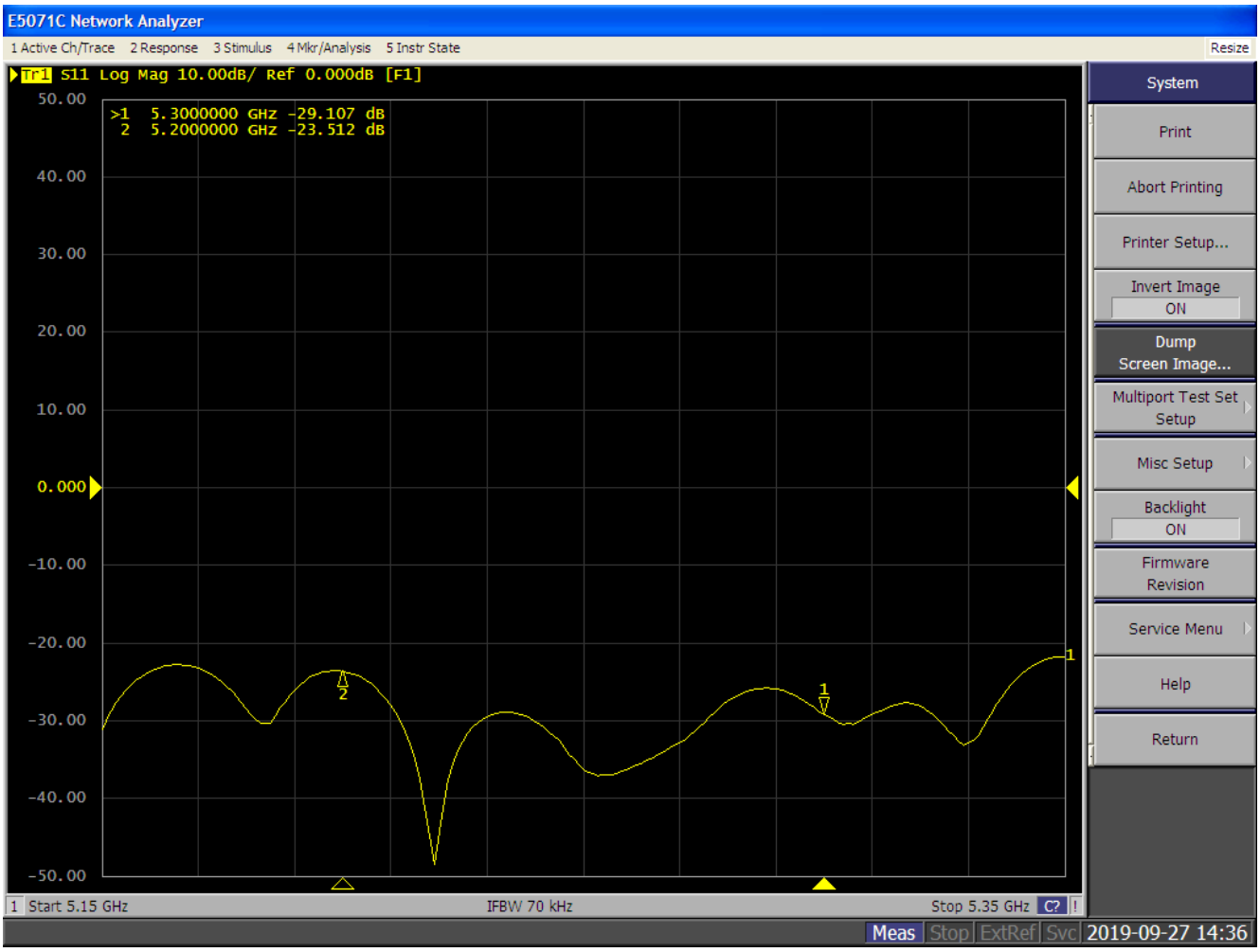

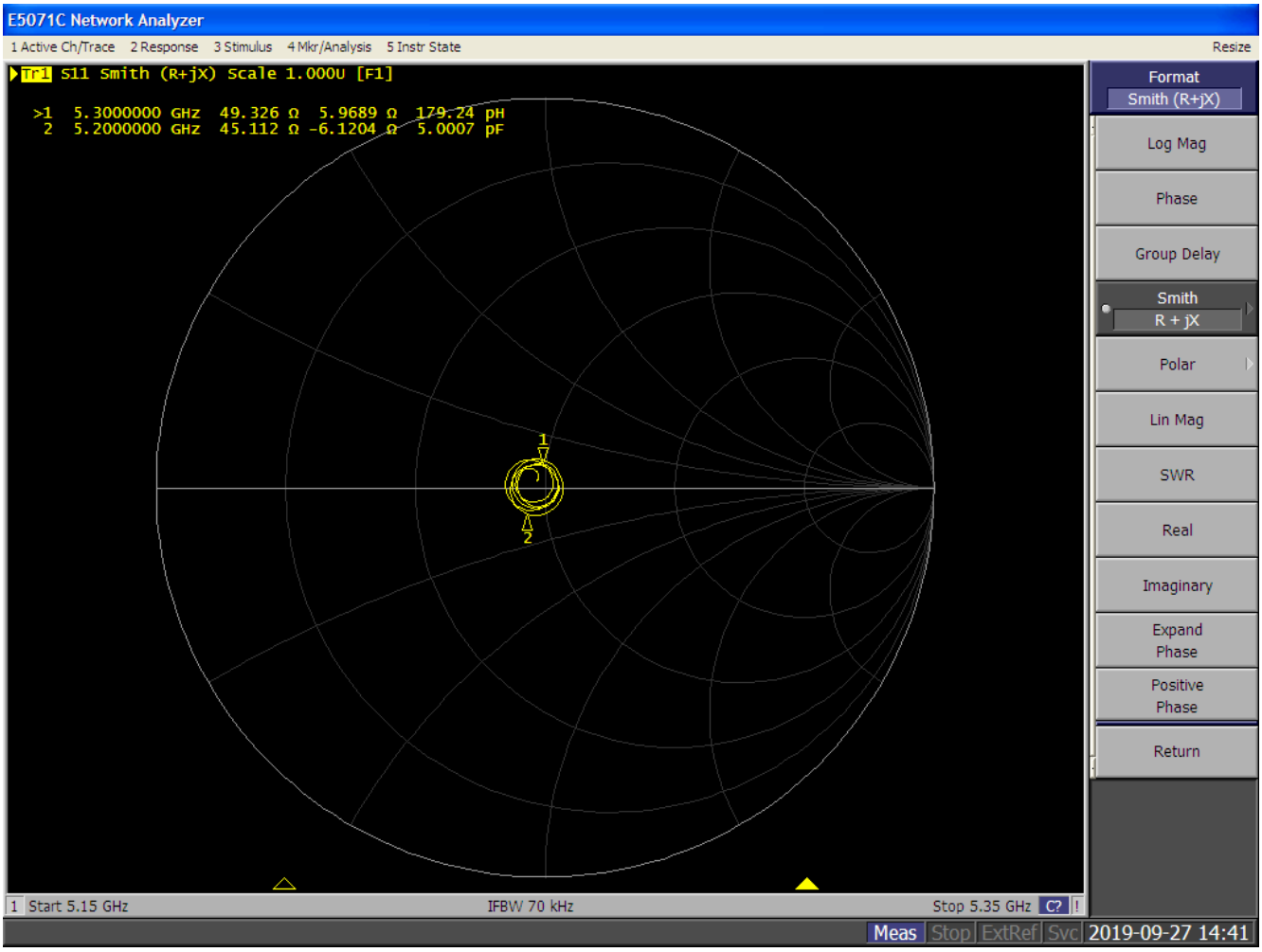


Plot for Antenna Parameters with Body Tissue 5500 MHz

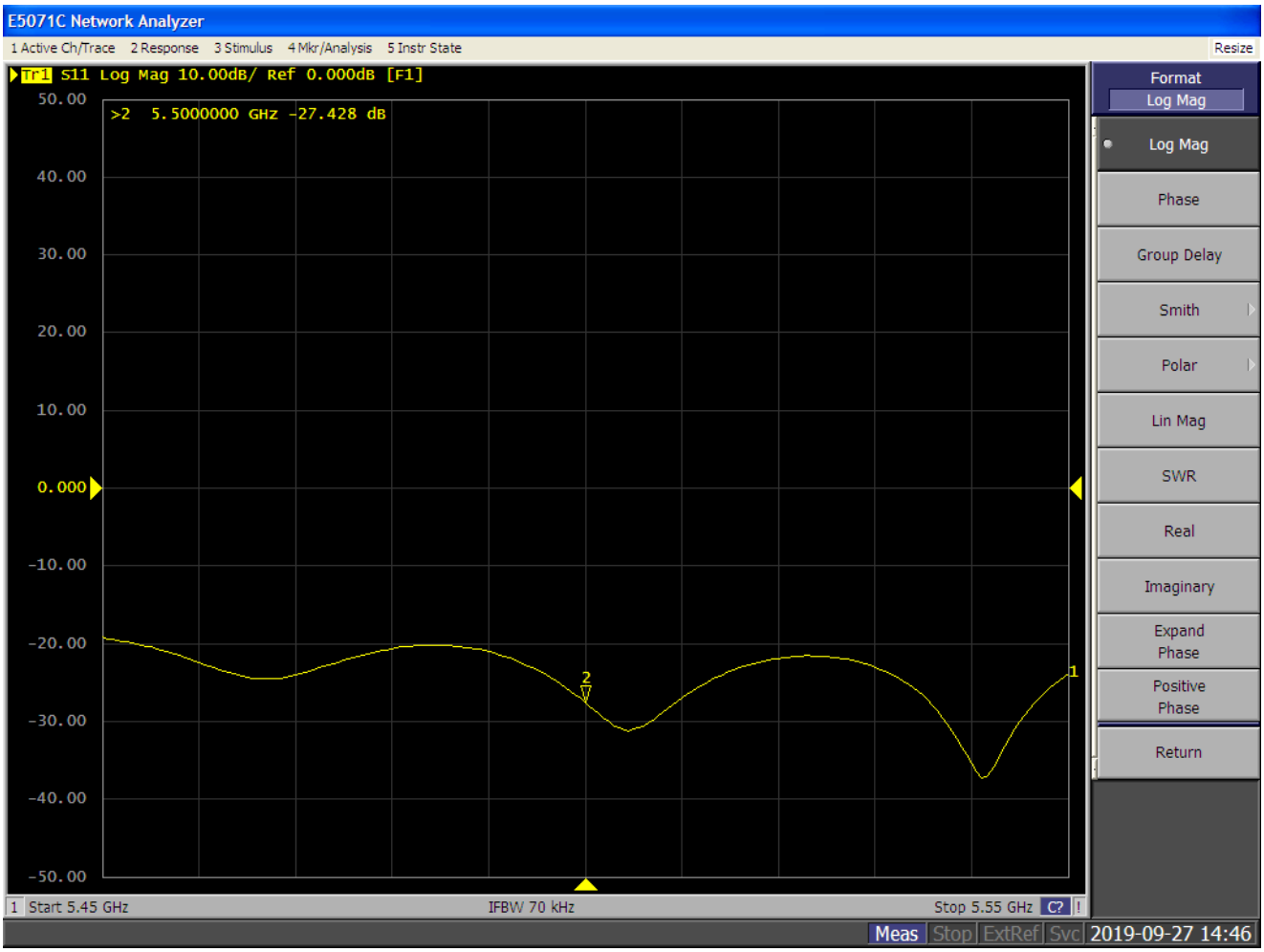

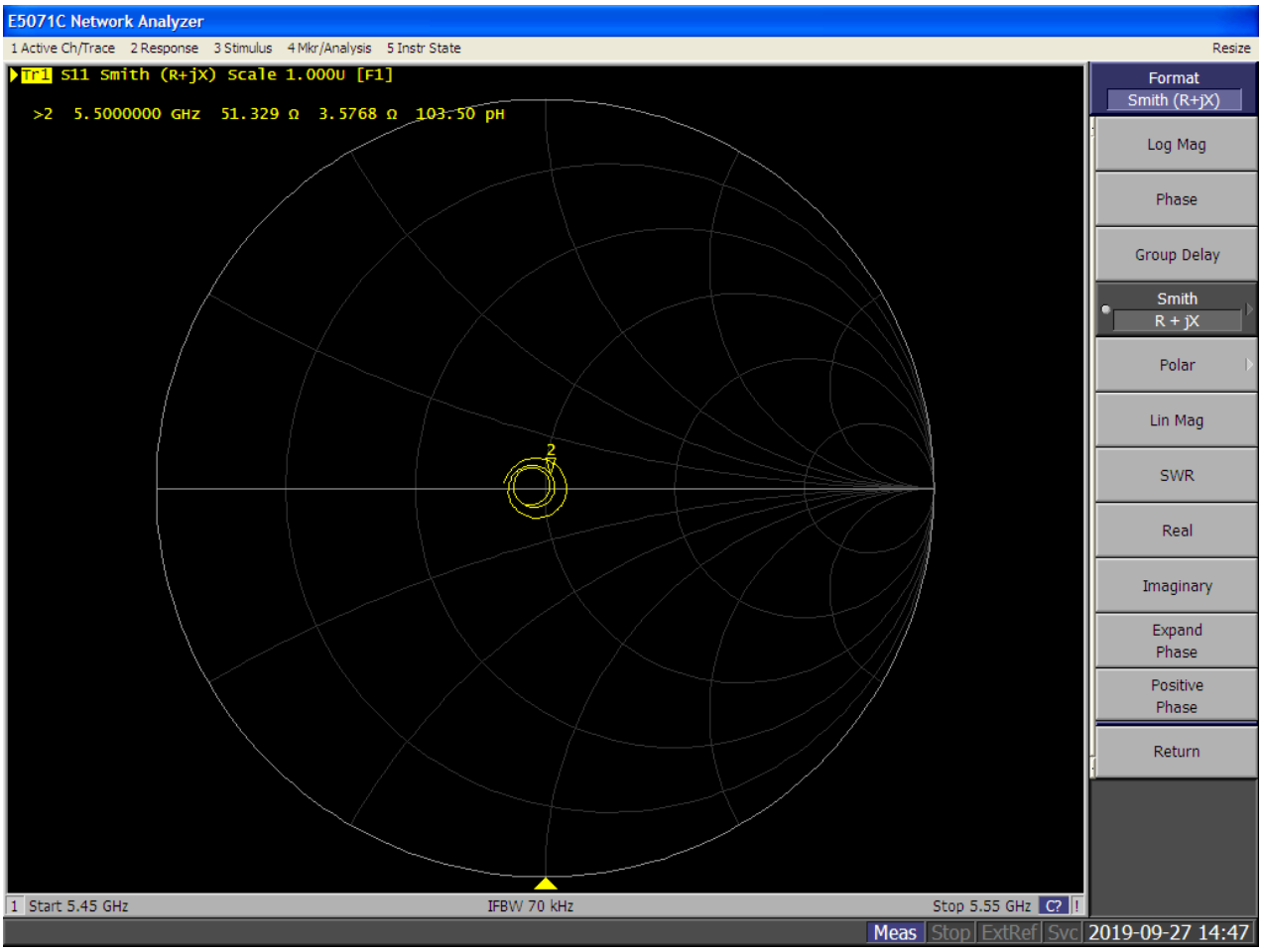


Plot for Antenna Parameters with Body Tissue 5600 MHz

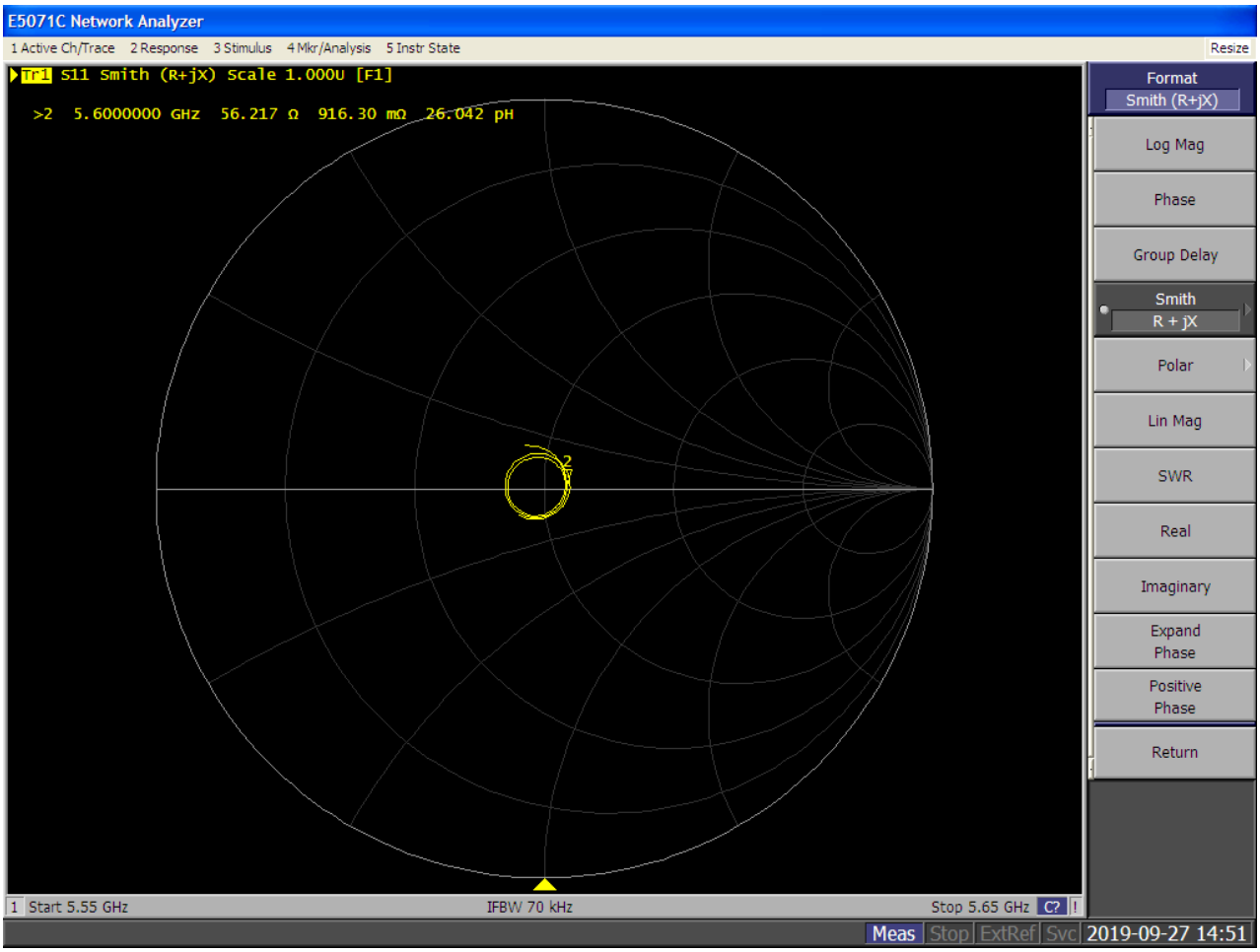

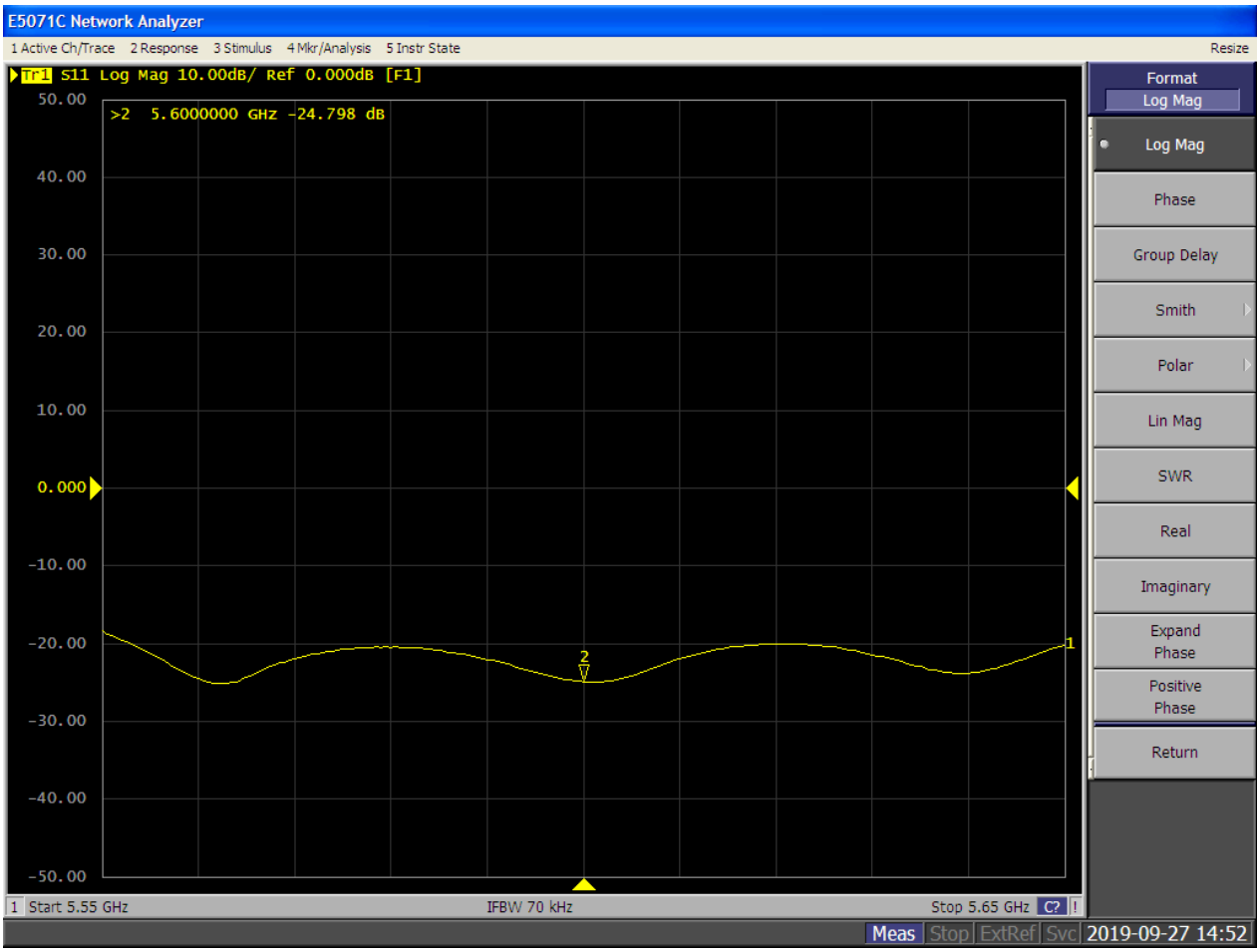


Plot for Antenna Parameters with Body Tissue 5800 MHz

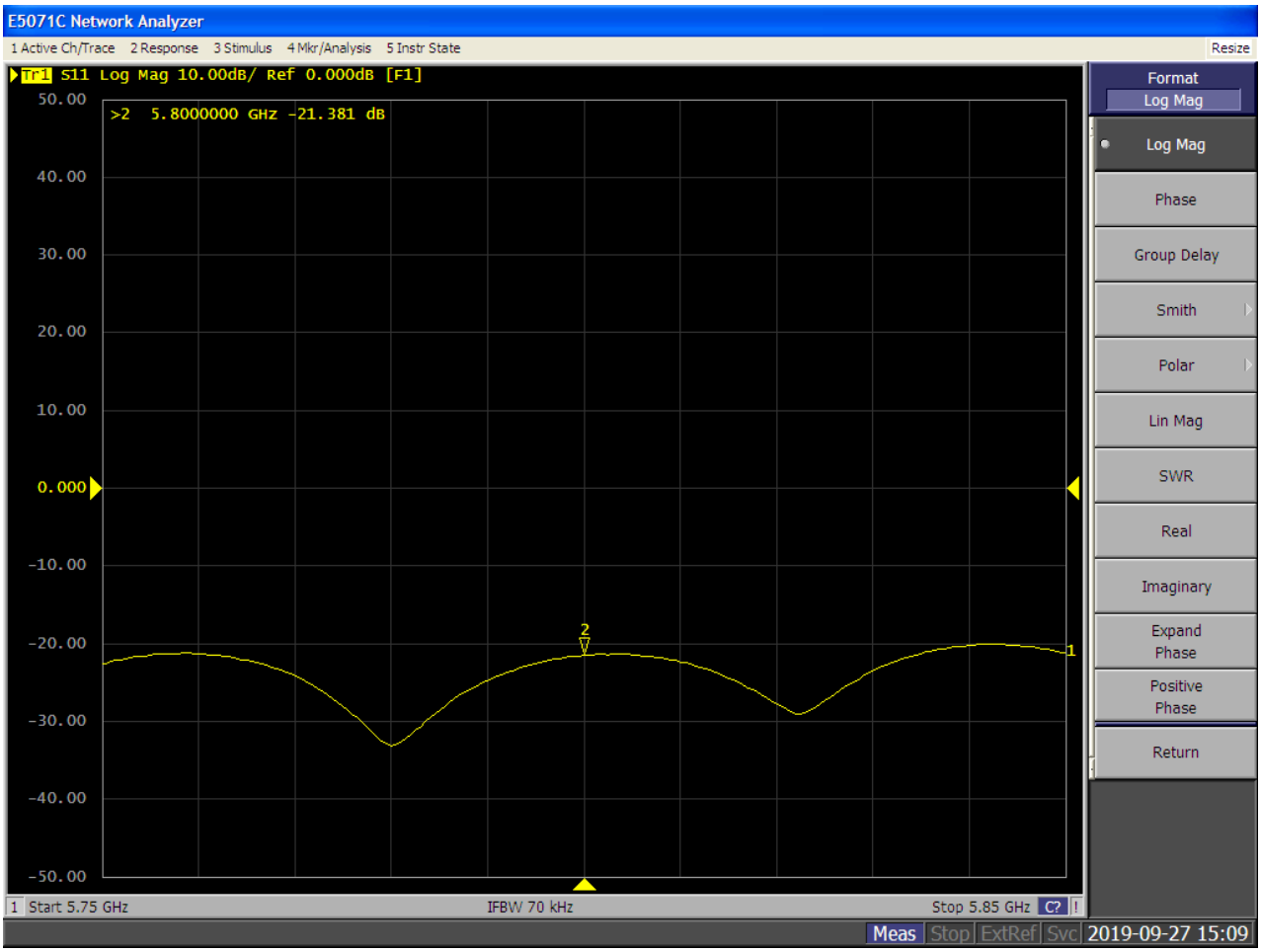

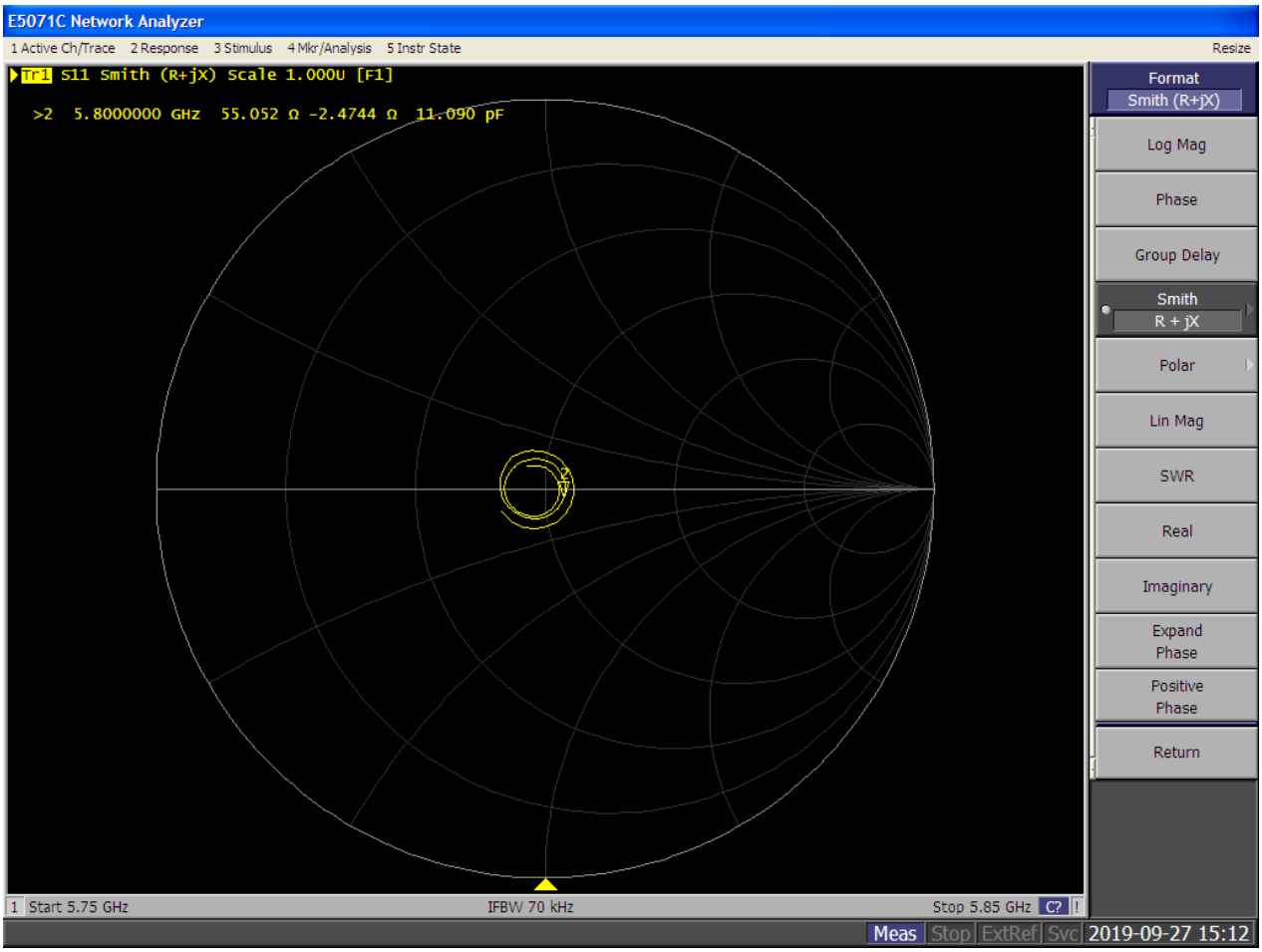
E5071C Network Analyzer
1 Active Ch/Trace
2 Response
3 Stimulus
4 Mkr/Analysis
5 Instr State
Resize
Tr1 S11 Smith (R+jX) Scale 1.000U [F1]
>2 5.8000000 GHz 55.052 Ω -2.4744 Ω 11.090 pF
Format
Smith (R+jX)
Log Mag
Phase
Group Delay
Smith
R + jX
Polar
Lin Mag
SWR
Real
Imaginary
Expand Phase
Positive Phase
Return
1 Start 5.75 GHz
IFBW 70 kHz
Stop 5.85 GHz
Meas
Stop
ExtRef
Svc
2019-09-27 15:12