Audix Technology Corp.
No. 53-11, Dingfu, Linkou, Dist.,
New Taipei City244,Taiwan

Tel: +886 2 26099301
Fax: +886 2 26099303

FCC 15.407 NII
DFS Test Report

for

LG Electronics Inc.

222, LG-ro Jinwi-myeon, Pyeongtaek-Si, Gyeonggi-Do, 451-713, Korea

Product Name	:	**Notebook Computer**
Model Name	:	**(1)17Z990 (2)17ZD990 (3)17ZB990 (4)17ZG990 (5)LG17Z99**
Brand		**LG**
FCC ID	:	**BEJNT-17Z990**

Prepared by: : **AUDIX Technology Corporation, EMC Department**

Testing Laboratory
1724

TESTING
NVLAP LAB CODE 200077-0

The test report is based on a single evaluation of one sample of the above-mentioned products. It does not imply an assessment of the whole production and does not permit the use of the test lab logo.
The report must not be used by the client to claim product certification, approval, or endorsement by NVLAP, NIST, or any agency of the U.S. Government.

This test report may be reproduced in full only. The document may only be updated by Audix Technology Corp. personnel. Any changes will be noted in the Document History section of the report.

Audix Technology Corp.
No. 53-11, Dingfu, Linkou, Dist.,
New Taipei City244,Taiwan
Tel: +886 2 26099301
Fax: +886 2 26099303

TABLE OF CONTENTS

Description Page

TEST REPORT CERTIFICATION 3
1. REVISION RECORD OF TEST REPORT 4
2. SUMMARY OF TEST RESULTS 5
3. GENERAL INFORMATION 6
3.1. Description of Application 6
3.2. Description of EUT 7
3.3. Antenna Information 8
3.4. EUT Specifications Assessed in Current Report 9
3.5. Descriptions of Key Components 10
3.6. Test Configuration 12
3.7. Tested Supporting System List 12
3.8. Description of Test Facility 13
3.9. Measurement Uncertainty 13
4. MEASUREMENT EQUIPMENTLIST 14
5. WORKING MODES AND REQUIREMENT TEST ITEM 15
5.1. Applicability of DFS Requirements Prior To Use A Channel 15
5.2. Applicability of DFS Requirements During Normal Operation 15
6. DFS DETECTION THRESHOLOS AND RADAR TEST WAVEFORMS 16
6.1. Interference Threshold Value, Master or Client Incorporating In-Service Monitoring 16
6.2. Radar Test Waveform Minimum Step 16
6.3. Short Pulse Radar Test Waveforms 17
6.4. Long Pulse Radar Test Waveforms 18
6.5. Frequency Hopping Pulse Radar Test Waveforms 20
6.6. Conducted Calibration Setup 22
6.7. Radar Waveform Calibration Procedure 22
6.8. Calibration Deviation 22
6.9. Radar Waveform Calibration Result 23
7. TEST SETUP AND TEST RESULT 24
7.1. Test Setup 24
7.2. Channel Move Time, Channel Closing Transmission Time, Non-Occupancy Period, Non-Associated Client Beacon Measurement 26

APPENDIX A TEST PHOTOGRAPHS

This test report may be reproduced in full only. The document may only be updated by Audix Technology Corp. personnel. Any changes will be noted in the Document History section of the report.

Audix Technology Corp.
No. 53-11, Dingfu, Linkou, Dist.,
New Taipei City244,Taiwan

Tel: +886 2 26099301
Fax: +886 2 26099303

TEST REPORT CERTIFICATION

Applicant	:	LG Electronics Inc.
Factory	:	LG Electronics Nanjing New Technology Co., Ltd.
EUT Description		
(1) Product	:	Notebook Computer
(2) Model	:	(1)17Z990 (2)17ZD990 (3)17ZB990 (4)17ZG990 (5)LG17Z99
(3) Brand	:	LG
(4) Power Rating	:	DC 19V, 2.53A

Applicable Standards:

47CFRFCC Part 15 Subpart E
ANSI C63.10:2013
KDB 905462 D02 UNII DFS Compliance Procedures New Rules v02
KDB 905462 D03 UNII Clients Without Radar Detection New Rules v01r02

Audix Technology Corp. tested the equipment mentioned in accordance with the requirements set forth in the above standards. Test results indicate that the equipment tested is capable of demonstrating compliance with the requirements as documented within this report.
Audix Technology Corp. does not assume responsibility for any conclusions and generalizations drawn from the test results with regard to other specimens and samples.

Date of Report: 2018. 11. 02

Reviewed by: (Tina Huang/Administrator)

Approved by: (Ben Cheng/Manager)

This test report may be reproduced in full only. The document may only be updated by Audix Technology Corp. personnel. Any changes will be noted in the Document History section of the report.

Audix Technology Corp.
No. 53-11, Dingfu, Linkou, Dist.,
New Taipei City244,Taiwan
Tel: +886 2 26099301
Fax: +886 2 26099303

1. REVISION RECORD OF TEST REPORT

Edition No	Issued Data	Revision Summary	Report Number
0	2018. 11. 02	Original Report	EM-F180486

This test report may be reproduced in full only. The document may only be updated by Audix Technology Corp. personnel. Any changes will be noted in the Document History section of the report.

Audix Technology Corp.
No. 53-11, Dingfu, Linkou, Dist.,
New Taipei City244,Taiwan
Tel: +886 2 26099301
Fax: +886 2 26099303

2. SUMMARY OF TEST RESULTS

Description	Results
Channel Availability Check Time	**N/A**
Channel Move Time	**PASS**
Non-Occupancy Period	**PASS**
Non-Associated Client Beacon	**PASS**
Channel Closing Transmission Time	**PASS**
U-NII Detection Bandwidth	**N/A**
N/A is an abbreviation for Not Applicable, sine the product is client without radar detection function	

This test report may be reproduced in full only. The document may only be updated by Audix Technology Corp. personnel. Any changes will be noted in the Document History section of the report.

Audix Technology Corp.
No. 53-11, Dingfu, Linkou, Dist.,
New Taipei City244,Taiwan
Tel: +886 2 26099301
Fax: +886 2 26099303

3. GENERAL INFORMATION

3.1. Description of Application

Applicant	LG Electronics Inc. 222, LG-ro, Jinwi-myeon, Pyeongtaek-si, Gyeonggi-do 451-713 Korea.
Manufacturer	LG Electronics Nanjing New Technology Co., Ltd. No.346,Yaoxin Road, Economic & Technical Development Zone, Nanjing, China.
Product	Notebook Computer
Brand	LG
Model	(1)17Z990 (2)17ZD990 (3)17ZB990 (4)17ZG990 (5)LG17Z99 The difference between all models is different in the sales customers.

This test report may be reproduced in full only. The document may only be updated by Audix Technology Corp. personnel. Any changes will be noted in the Document History section of the report.

Audix Technology Corp.
No. 53-11, Dingfu, Linkou, Dist.,
New Taipei City244,Taiwan
Tel: +886 2 26099301
Fax: +886 2 26099303

3.2. Description of EUT

<table>
<tr><td>Test Model</td><td>17Z990</td></tr>
<tr><td>Serial Number</td><td>N/A</td></tr>
<tr><td>Power Rating</td><td>DC 19V, 2.53A</td></tr>
<tr><td>RF Features</td><td>WLAN:802.11a/b/g/n/ac
Bluetooth: BT and BLE</td></tr>
<tr><td>Transmit Type</td><td>
<table>
<tr><th colspan="2">2.4 GHz</th></tr>
<tr><td>802.11b</td><td>1T1R</td></tr>
<tr><td>802.11g</td><td>1T1R</td></tr>
<tr><td>802.11n-HT20</td><td>2T2R</td></tr>
<tr><td>802.11n-HT40</td><td>2T2R</td></tr>
<tr><td>BT/BLE</td><td>1T1R</td></tr>
</table>
<table>
<tr><th colspan="2">UNII Bands</th></tr>
<tr><td>802.11a</td><td>1T1R</td></tr>
<tr><td>802.11n-HT20/
802.11ac-VHT20</td><td>2T2R</td></tr>
<tr><td>802.11n-HT40/
802.11ac-VHT40</td><td>2T2R</td></tr>
<tr><td>802.11ac-VHT80</td><td>2T2R</td></tr>
<tr><td>802.11ac-VHT160</td><td>2T2R</td></tr>
</table>
</td></tr>
<tr><td>Device Category</td><td>☐Outdoor Access Point
☐Fixed point-to-point Access Point
☐Indoor Access Point
■Mobile and Portable client device</td></tr>
<tr><td>Sample Status</td><td>Production</td></tr>
<tr><td>Date of Receipt</td><td>2018. 10. 15</td></tr>
<tr><td>Date of Test</td><td>2018. 10. 31</td></tr>
<tr><td>Interface Ports of EUT</td><td>• One Micro SD Card Slot
• One Earphone Port
• Three USB 3.0 Ports
• One USB Type C Port
• One HDMI Port
• One DC Input Port</td></tr>
<tr><td>Accessories Supplied</td><td>• AC Adapter
• LAN Gender</td></tr>
</table>

This test report may be reproduced in full only. The document may only be updated by Audix Technology Corp. personnel. Any changes will be noted in the Document History section of the report.

Audix Technology Corp.
No. 53-11, Dingfu, Linkou, Dist.,
New Taipei City244,Taiwan
Tel: +886 2 26099301
Fax: +886 2 26099303

3.3. Antenna Information

2.4G Antenna					
No.	Antenna Part Number	Manufacture	Antenna Type	Frequency (MHz)	Max Gain (dBi)
1	WA-F-LBLB-04-064 (Main)	INPAQ	FPCB	2400	1.57
				2450	1.41
				2500	1.55
2	WA-F-LBLB-04-064 (AUX)	INPAQ	FPCB	2400	1.81
				2450	1.07
				2500	1.79

5G Antenna					
No.	Antenna Part Number	Manufacture	Antenna Type	Frequency (MHz)	Max Gain (dBi)
1	WA-F-LBLB-04-064 (Main)	INPAQ	FPCB	5100	2.85
				5400	3.13
				5800	3.19
2	WA-F-LBLB-04-064 (AUX)	INPAQ	FPCB	5100	3.09
				5400	3.02
				5800	2.66

This test report may be reproduced in full only. The document may only be updated by Audix Technology Corp. personnel. Any changes will be noted in the Document History section of the report.

Audix Technology Corp.
No. 53-11, Dingfu, Linkou, Dist.,
New Taipei City244,Taiwan
Tel: +886 2 26099301
Fax: +886 2 26099303

3.4. EUT Specifications Assessed in Current Report

Mode	UNII Band	Fundamental Range (MHz)	Channel Number
802.11a	II-2A	5260-5320	4
	II-2C	5500-5700	11
802.11n-HT20/ 802.11ac-VHT20	II-2A	5260-5320	4
	II-2C	5500-5720	12
802.11n-HT40/ 802.11ac-VHT40	II-2A	5270-5310	2
	II-2C	5510-5710	6
802.11ac-VHT80	II-2A	5290	1
	II-2C	5530-5690	3
802.11ac-VHT160	II-2C	5570	1
Remark: UNII Band II-2A and II-2C (DFS Function, Slave/no In service monitor, no Ad-Hoc mode)			

Mode	Modulation	Data Rate (Mbps)
802.11a	OFDM (BPSK/QPSK/16QAM/64QAM)	Up to 54
802.11n-HT20	OFDM (BPSK/QPSK/16QAM/64QAM)	Up to 144.4
802.11n-HT40		Up to 300
802.11ac-VHT20	OFDM (BPSK/QPSK/16QAM/64QAM/256QAM)	Up to 173.3
802.11ac-VHT40		Up to 400
802.11ac-VHT80		Up to 866.7
802.11ac-VHT160		Up to 1733.3

This test report may be reproduced in full only. The document may only be updated by Audix Technology Corp. personnel. Any changes will be noted in the Document History section of the report.

Audix Technology Corp.
No. 53-11, Dingfu, Linkou, Dist.,
New Taipei City244,Taiwan
Tel: +886 2 26099301
Fax: +886 2 26099303

3.5. Descriptions of Key Components

3.5.1. For the All Component Lists

Item	Supplier	Model / Type	Character
System	Microsoft	Win10 Home	---
	Microsoft	Win10 Pro	---
Main Board	LG	PRIME Main B/D PCB	(without Thunderbolt) Manufacturer: #1 Hannstar Board Tech (Jiang Yin) Corp., Ltd. #2 Elec & Eltek Company (MCO) Limited
	LG	PRIME Main B/D PCB	(with Thunderbolt) Manufacturer: #1 Hannstar Board Tech (Jiang Yin) Corp., Ltd. #2 Elec & Eltek Company (MCO) Limited.
SUB Board	LG	PRIME SUB B/D	(with Finger Printer Manufacturer: #1 Hannstar Board Tech (Jiang Yin) Corp., Ltd. #2 Elec & Eltek Company (MCO) Limited.
	LG	PRIME SUB B/D	(withoutFinger Printer) Manufacturer: #1 Hannstar Board Tech (Jiang Yin) Corp., Ltd. #2 Elec & Eltek Company (MCO) Limited.
CPU (Socket: BGA1528)	Intel	i7-8565U	1.8GHz, up to 4.6GHz
	Intel	i5-8265U	1.6GHz, up to 3.9GHz
	Intel	I3-8145U	2.1GHz, up to 3.9GHz
17” LCD Panel	LG Display	LP170WQ1(SP)(A1)	Resolution: 2560 x 1600, 60Hz WQXGA IPS (Normal Non touch)
Storage (SSD)	Samsung	MZ-VLB5120 (P/N MZVLB512HAJQ-0000)	512GB (NVMe)
		MZ-NLN128C (P/N MZNLN128HAHQ-0000)	128GB (SATA)
	SK hynix	P/N HFS256G39TNF	256GB (SATA)
		P/N HFS512G39TNF	512GB (SATA)

This test report may be reproduced in full only. The document may only be updated by Audix Technology Corp. personnel. Any changes will be noted in the Document History section of the report.

Audix Technology Corp.
No. 53-11, Dingfu, Linkou, Dist.,
New Taipei City244,Taiwan
Tel: +886 2 26099301
Fax: +886 2 26099303

Item	Supplier	Model / Type	Character
Memory (RAM)	Samsung	K4AAG16 5WB MCRC	8GB DDR4 (On Board)
		K4A8G16 5WC-BCTD	4GB DDR4 (On Board)
	SK hynix	H5ANAG6NAMR	8GB DDR4 (On Board)
		H5AN8G6NAFR	4GB DDR4 (On Board)
	Samsung	M471A5244CB0-CRC	4GB DDR4SODIMM(on Card)
		M471A5244CB0-CTD	4GB DDR4 SODIMM(on Card)
		M471A1K43CB1-CTD	8GB DDR4 SODIMM (on Card)
		M471A1K43CB1-CRC	8GB DDR4 SODIMM (on Card)
	SK hynix	HMA81GS6AFR8N-UH	8GB DDR4 SODIMM (on Card)
		HMA851S6AFR6N-UH	4GB DDR4 SODIMM (on Card)
Battery Pack	LG	LBS1224E	72Wh, DC7.7V, 9450mAh
WLAN Combo Card	Intel	9560D2W	802.11a/b/g/n/ac 2.4GHz/5GHz + BT+BLE 5.0
WLAN Combo Antenna	LG (INPAQ)	WA-F-LBLB-04-064	FPCB Type Main: Black, Aux: Gray
Keyboard	LG	SN3870BL	17Z990 Black KBD
		SN3870BL1	17Z990 White KBD
Web Camera	Chicony	CKFIH2821005290LH	With two microphones
		CKFIH28-121005290LH	With One microphone
	Luxvisions	7BF109N2DC	With two microphones
		7BF109N2DD	With One microphone
Finger Print	SUNTEL	SFPA-L002STA(White)	---
	SUNTEL	SFPA-L002STB(Black)	---
LAN Gender (Type C to LAN)	SUZHOU MEC ELECTRONICS	80-5946-111 (White)	10/100 Megabit Ethernet
		80-5946-101 (Black)	
	ARIN TECH CO. LTD	GD-08MF-36-WH-LP10 (White)	10/100 Megabit Ethernet
		GD-08MF-36-BK-LP11 (Black)	
	Type C to LAN: Shielded, Undetached, 0.12m		
AC Adapter (48W)	LG (HONOR)	ADS-48MS-19-2 19048E	I/P: AC 100-240V, 50-60Hz, 1.5A, O/P: DC 19V, 2.53A
	DC Power Cord: Non-Shielded, Undetached, 1.8m AC Power Cord: Non-Shielded, Detached, 1.0m (2C) (For Other Countries) AC Power Cord: Non-Shielded, Detached, 1.55m (2C) (For US, Canada, Mexico)		

Remark: For more detailed features description, please refer to the manufacturer's specifications or the user manual.

This test report may be reproduced in full only. The document may only be updated by Audix Technology Corp. personnel. Any changes will be noted in the Document History section of the report.

Audix Technology Corp.
No. 53-11, Dingfu, Linkou, Dist.,
New Taipei City244,Taiwan
Tel: +886 2 26099301
Fax: +886 2 26099303

3.5.2. The EUT collocates with following worst components, which are used to establish a basic configuration of system during test:

SKU	
Main Board	LG, PRIME Main B/D PCB (with Thunderbolt)
SUB Board	LG, PRIME Main B/D PCB (with Finger Printer)
CPU	Intel, i7-8565U
17” LCD Panel	LP170WQ1(SP)(A1) (Normal Non touch)
Storage (SSD)	Samsung, 512GB (NVMe)
	Samsung, 128GB (SATA)
Memory (RAM)	Samsung, 8GB (On Board)
	Samsung, 8GB (On Card)
Battery Pack	LG, LBS1224E
WLAN Combo Card	Intel, 9560D2W
WLAN Combo Antenna	LG (INPAQ), WA-F-LBLB-04-064
Keyboard	LG, SN3870BL
Web Camera	Chicony, CKFIH2821005290LH
Finger Print	SUNTEL, SFPA-L002STA(White)
LAN Gender (Type C to LAN)	SUZHOU MEC ELECTRONICS, 80-5946-111 (White)
AC Adapter	LG (HONOR), ADS-48MS-19-2 19048E

3.6. Test Configuration

Item	Bandwidth	Test Channel
Channel Move Time& Channel Closing Transmission Time	20MHz	52
Non-Occupancy Period & Non-associated Test	20MHz	52

3.7. Tested Supporting System List

Item	Manufacturer	Model	Remark
AP Server embedded with Wireless AC Module			
AP Server	D-LINK	DIR-868L	FCC ID: KA2IR868LA1 IC: 4216A-IR868LA1
Wireless AC Module	Aplpha	WMC-AC01	FCC ID: RRK2012060056-1 IC: 4833A-WMCAC01A1

This test report may be reproduced in full only. The document may only be updated by Audix Technology Corp. personnel. Any changes will be noted in the Document History section of the report.

Audix Technology Corp.
No. 53-11, Dingfu, Linkou, Dist.,
New Taipei City244,Taiwan
Tel: +886 2 26099301
Fax: +886 2 26099303

3.8. Description of Test Facility

Name of Test Firm	Audix Technology Corporation / EMC Department No. 53-11, Dingfu, Linkou Dist., New Taipei City 244, Taiwan Tel: +886-2-26092133 Fax: +886-2-26099303 Website : www.audixtech.com Contact e-mail: attemc_report@audixtech.com
Accreditations	The laboratory is accredited by following organizations under ISO/IEC 17025:2005 (1) NVLAP(USA) NVLAP Lab Code 200077-0 (2) TAF(Taiwan) No. 1724
Test Facilities	FCC OET Designation Number under APEC MRA by NCC is : TW1724 (1) RF Test Room

3.9. Measurement Uncertainty

Test Item	Uncertainty
DFS Measurement	±0.5ms
Threshold	±0.33dB

This test report may be reproduced in full only. The document may only be updated by Audix Technology Corp. personnel. Any changes will be noted in the Document History section of the report.

Audix Technology Corp.
No. 53-11, Dingfu, Linkou, Dist.,
New Taipei City244,Taiwan
Tel: +886 2 26099301
Fax: +886 2 26099303

4. MEASUREMENT EQUIPMENTLIST

Item	Type	Manufacturer	Model No.	Serial No.	Cal. Date	Cal. Interval
1.	Vector Signal Generation	R&S	SMU200A	104893	2018. 06. 27	1 Year
2.	Spectrum Analyzer	Agilent	N9030A-544	US51350140	2018. 06. 20	1 Year
3.	Spectrum Analyzer	R&S	FSV30	101181	2018. 07. 12	1 Year
4.	Atteuator (10dB) X2	Worken	WK0602-10	0120A02208001S	N.C.R	N.C.R
5.	Atteuator (30dB) X2	Worken	WK0602-30	0120A02208002S	N.C.R	N.C.R

This test report may be reproduced in full only. The document may only be updated by Audix Technology Corp. personnel. Any changes will be noted in the Document History section of the report.

Audix Technology Corp.
No. 53-11, Dingfu, Linkou, Dist.,
New Taipei City244,Taiwan
Tel: +886 2 26099301
Fax: +886 2 26099303

5. WORKING MODES AND REQUIREMENT TEST ITEM

5.1. Applicability of DFS Requirements Prior To Use A Channel

Requirement	Operational Mode		
	Master	Client without radar detection	Client with radar detection
Non-Occupancy Period	✓	Not required	✓
DFS Detection Threshold	✓	Not required	✓
Channel Availability Check Time	✓	Not required	Not required
Uniform Spreading	✓	Not required	Not required
U-NII Detection Bandwidth	✓	Not required	✓

5.2. Applicability of DFS Requirements During Normal Operation

Requirement	Operational Mode		
	Master	Client without radar detection	Client with radar detection
DFS Detection Threshold	✓	Not required	✓
Channel Closing Transmission Time	✓	✓	✓
Channel Move Time	✓	✓	✓
U-NII Detection Bandwidth	✓	Not required	✓

This test report may be reproduced in full only. The document may only be updated by Audix Technology Corp. personnel. Any changes will be noted in the Document History section of the report.

Audix Technology Corp.
No. 53-11, Dingfu, Linkou, Dist.,
New Taipei City244,Taiwan
Tel: +886 2 26099301
Fax: +886 2 26099303

6. DFS DETECTION THRESHOLOS AND RADAR TEST WAVEFORMS

6.1. Interference Threshold Value, Master or Client Incorporating In-Service Monitoring

Maximum Transmit Power	Value (See Notes 1 and 2)
≥ 200 milliwatt	-64dBm
< 200 milliwatt	-62dBm

Note 1: This is the level at the input of the receiver assuming a 0 dBi receive antenna.
Note 2: Throughout these test procedures an additional 1 dB has been added to the amplitude of the test transmission waveforms to account for variations in measurement equipment. This will ensure that the test signal is at or above the detection threshold level to trigger a DFS response.

The radar Detection Threshold, lowest antenna gain is the parameter of interference radar DFS detection threshold.

6.2. Radar Test Waveform Minimum Step

Step intervals of 0.1 microsecond for Pulse Width, 1 microsecond for PRI, 1MHz for chirp width and 1 for the number of pulses will be utilized for the random determination of specific test waveforms.

This test report may be reproduced in full only. The document may only be updated by Audix Technology Corp. personnel. Any changes will be noted in the Document History section of the report.

Audix Technology Corp.
No. 53-11, Dingfu, Linkou, Dist.,
New Taipei City244,Taiwan
Tel: +886 2 26099301
Fax: +886 2 26099303

6.3. Short Pulse Radar Test Waveforms

Radar Type	Pulse Width (µsec)	PRI (µsec)	Number of Pulse	Minimum Percentage of Successful Detection	Minimum number of Trials
0	1	1428	18	See Note 1	See Note 1
1A	1	15 unique PRI in KDB 905462 D02 Table 5a	$Roundup\left\{\left(\frac{1}{360}\right)\times\left(\frac{19\times10^6}{PRI}\right)\right\}$	60%	15
1B	1	15 unique PRI within 518-3066, Excluding 1A PRI		60%	15
2	1-5	150-230	23-29	60%	30
3	6-10	200-500	16-18	60%	30
4	11-20	200-500	12-16	60%	30
Aggregate (Radar Types 1-4)				80%	120
Note 1: Short Pulse Radar Type 0 should be used for the detection bandwidth test, channel move time, and channel closing time tests.					

A minimum of 30 unique waveforms are required for each of the short pulse radar types 2 through 4. For short pulse radar type 1, the same waveform is used a minimum of 30 times. If more than 30 waveforms are used for short pulse radar types 2 through 4, then each additional waveform must also be unique and not repeated from the previous waveforms. The aggregate is the average of the percentage of successful detections of short pulse radar types 1-4.

This test report may be reproduced in full only. The document may only be updated by Audix Technology Corp. personnel. Any changes will be noted in the Document History section of the report.

Audix Technology Corp.
No. 53-11, Dingfu, Linkou, Dist.,
New Taipei City244,Taiwan

Tel: +886 2 26099301
Fax: +886 2 26099303

FCC Radar Types (1~4) System Diagram

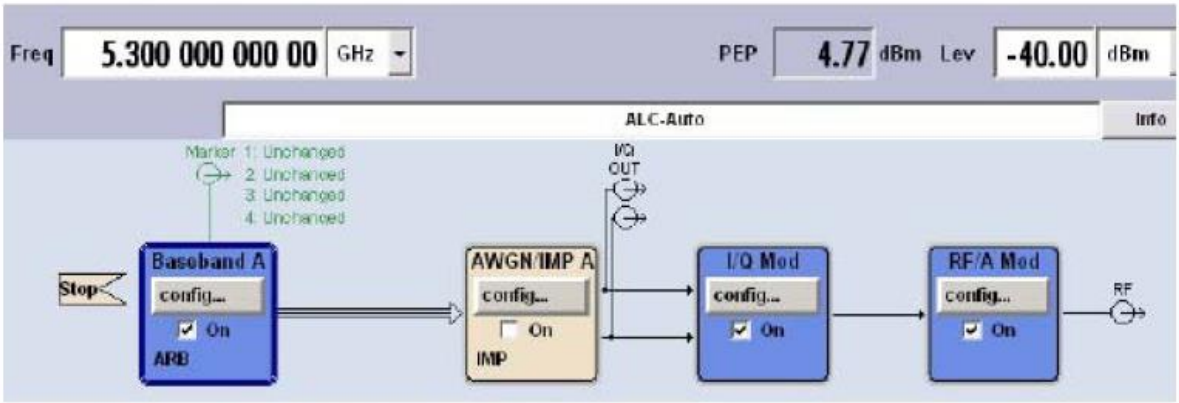

Used R&S SMU200A (Vector SG with two ARB)
B11: Base-band Generator with ARB (16M samples) and Digital Modulation
B13: Base-band Main Module
B106: frequency range (100 kHz to 6 GHz)
For selecting the waveform parameters from within the bounds of the signal type, system was random selection using uniform distribution.

6.4. Long Pulse Radar Test Waveforms

Radar Type	Pulse Width (µsec)	Chirp Width (MHz)	PRI (µsec)	Number of Pulse Per Burst	Number of Bursts	Minimum Percentage of Successful Detection	Minimum of Trials
5	50-100	5-20	1000-2000	1-3	8-20	80%	30

The parameters for this waveform are randomly chosen. Thirty unique waveforms are required for the Long Pulse radar test signal. If more 30 waveforms are used for the Long Pulse radar test signal, then each additional waveform must also be unique and not repeated from the previous waveforms. Each waveform is defined as following:

(1) The transmission period for the Long Pulse Radar test signal is 12 seconds.
(2) There are a total of 8 to 20 Bursts in the 12 second period, with the number of Bursts being randomly chosen. This number is Burst_Count.
(3) Each Burst consists of 1 to 3 pulses, with the number of pulses being randomly chosen. Each Burst within the 12 second sequence may have a different number of pulses.
(4) The pulse width is between 50 and 100 microseconds, with the pulse width being randomly chosen. Each pulse within a Burst will have the some pulse width. Pulses in different Bursts may have different pulse widths.

This test report may be reproduced in full only. The document may only be updated by Audix Technology Corp. personnel. Any changes will be noted in the Document History section of the report.

Audix Technology Corp.
No. 53-11, Dingfu, Linkou, Dist.,
New Taipei City244,Taiwan
Tel: +886 2 26099301
Fax: +886 2 26099303

(5) Each pulse has a linear FM chirp between 5 and 20MHz, with the chirp width being randomly chosen. Each pulse within a Burst will have the same chirp width. Pulses in different Burst may have different chirp widths. The chirp is centered on the pulse. For example, with a radar frequency of 5300MHz and a 20MHz chirped signal, the chirp starts at 5290MHz and ends at 5310MHz.

(6) If more than one pulse is present in a Burst, the time between the pulses will be between 1000 and 2000 microseconds, with the time being randomly chosen. If three pulses are present in a Burst, the time between the first and second pulses is chosen independently of the time between the second and third pulses.

(7) The 12 second transmission period is divided into even intervals. The number of intervals is equal to Burst_Count. Each interval is of length (12000000/Burst_Count) microseconds. Each interval contains one Burst. The start time for the Burst, relative to the beginning of the interval, is between 1 and [(12000000/Burst_Count)-(Total Burst length)+(One Random PRI interval)] microseconds, with the start time being randomly chosen. The step interval for the start time is 1 microsecond. The start time for each Burst is chosen independently.

A representative example of a Long Pulse radar test waveform:

(1) The total test signal length is 12 seconds.

(2) 8 Bursts are randomly generated for the Burst_Count.

(3) Burst 1 has 2 randomly generated pulses.

(4) The pulse width (for both pulses) is randomly selected to be 75 microseconds.

(5) The PRI is randomly selected to be at 1213 microseconds.

(6) Bursts 2 through 8 are generated using steps 3-5.

(7) Each Burst is contained in even intervals of 1500000 microseconds. The starting location for Pulse 1. Burst 1 is randomly generated (1 to 1500000 minus the total Burst 1 length + 1 random PRI interval) at the 325001 microsecond step. Bursts 2 through 8 randomly fall in successive 1500000 microsecond intervals (i.e. Burst 2 falls in the 1500001-3000000 microsecond range).

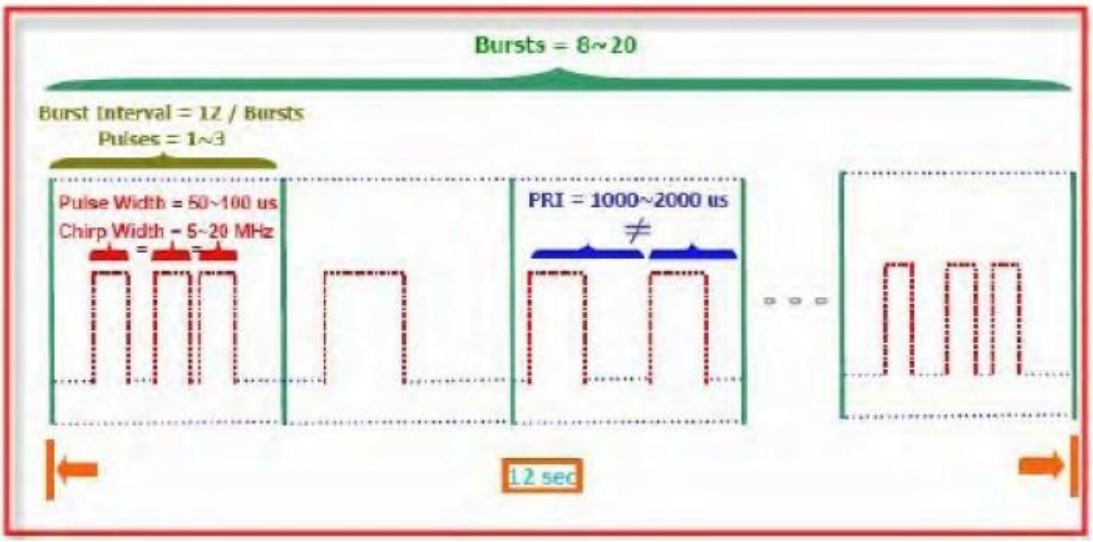

This test report may be reproduced in full only. The document may only be updated by Audix Technology Corp. personnel. Any changes will be noted in the Document History section of the report.

Audix Technology Corp.
No. 53-11, Dingfu, Linkou, Dist.,
New Taipei City244,Taiwan
Tel: +886 2 26099301
Fax: +886 2 26099303

FCC Radar Types (5) System Diagram

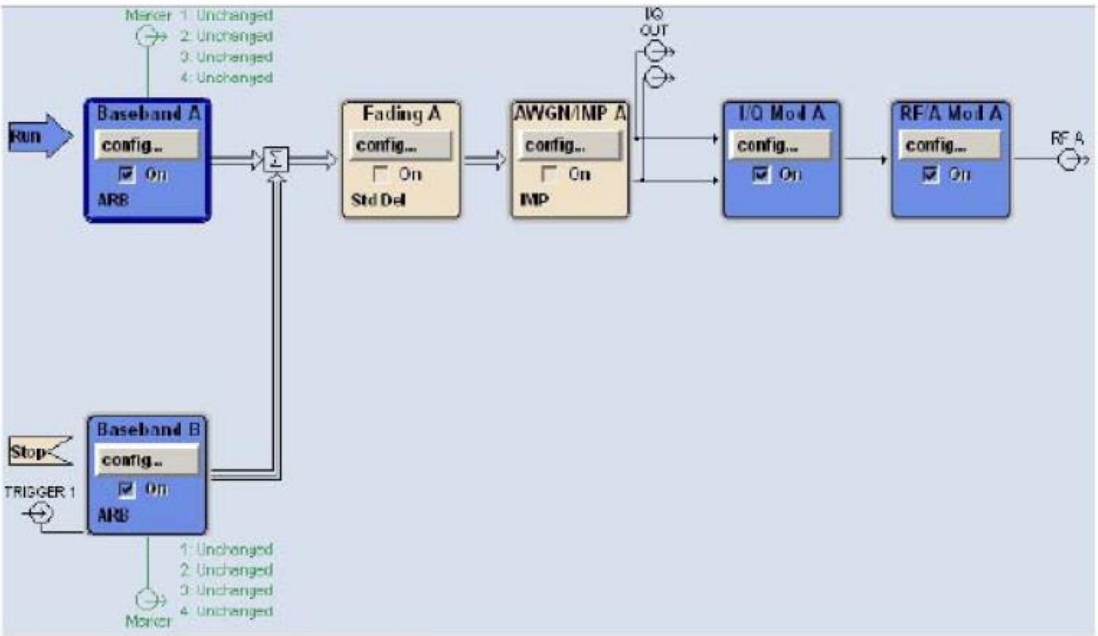

Used R&S SMU200A (Vector SG with two ARB)

Path A/Path B Two B11: Base-band Generator with ARB (16M samples) and Digital Modulation

B13: Base-band Main Module

B106: frequency range (100 kHz to 6 GHz)

For selecting the waveform parameters from within the bounds of the signal type, system was random selection using uniform distribution.

6.5. Frequency Hopping Pulse Radar Test Waveforms

Radar Type	Pulse Width (µsec)	PRI (µsec)	Pulses Per Hop	Hopping Rate (kHz)	Hopping Sequence Length (ms)	Minimum Percentage of Successful Detection	Minimum of Trials
6	1	333	9	0.333	300	70%	30

For the Frequency Hopping Radar Type, the same Burst parameters are used for each waveform. The hopping sequence is different for each waveform and a 100-length segment is selected from the hopping sequence defined by the following algorithm:

The first frequency in a hopping sequence is selected randomly from the group of 475 integer frequencies form 5250-5274MHz. Next, the frequency that was just chosen is removed from the group and a frequency is randomly selected from the remaining 474 frequencies in the group. This process continues until all 475 frequencies are chosen for the set. For selection of random frequency, the frequencies remaining within the group are always treated as equally likely.

This test report may be reproduced in full only. The document may only be updated by Audix Technology Corp. personnel. Any changes will be noted in the Document History section of the report.

Audix Technology Corp.
No. 53-11, Dingfu, Linkou, Dist.,
New Taipei City244,Taiwan

Tel: +886 2 26099301
Fax: +886 2 26099303

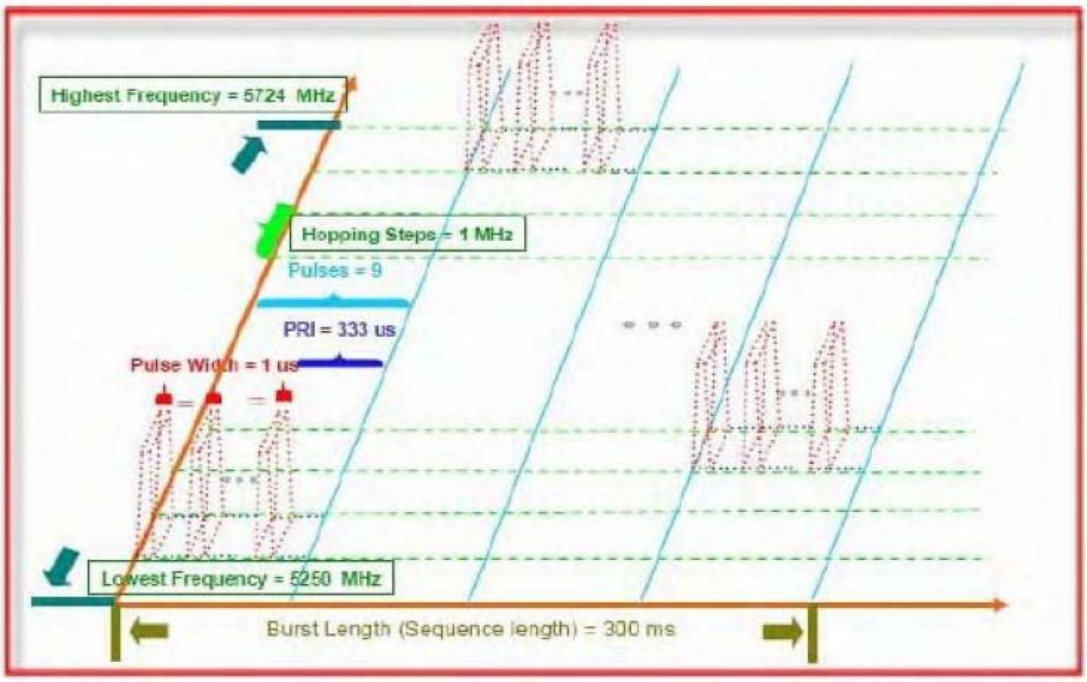

FCC Radar Types (6) System Diagram

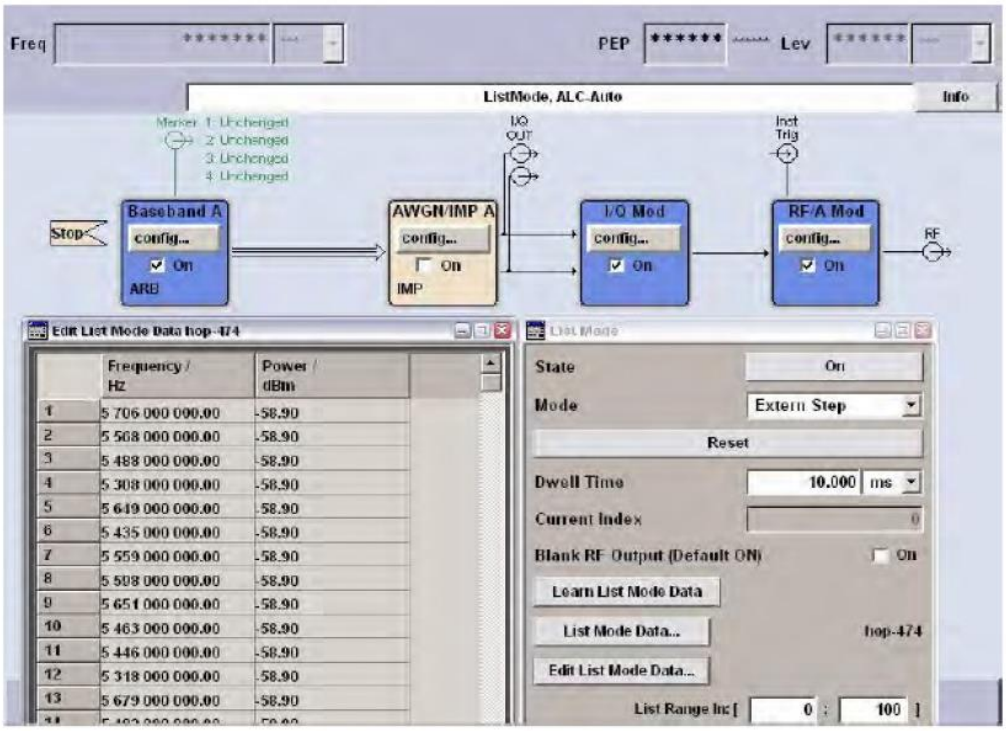

Used R&S SMU200A (Vector SG with two ARB)
B11: Base-band Generator with ARB (16M samples) and Digital Modulation
B13: Base-band Main Module
B106: frequency range (100 kHz to 6 GHz)
For selecting the waveform parameters from within the bounds of the signal type, system was random selection using uniform distribution.

This test report may be reproduced in full only. The document may only be updated by Audix Technology Corp. personnel. Any changes will be noted in the Document History section of the report.

Audix Technology Corp.
No. 53-11, Dingfu, Linkou, Dist.,
New Taipei City244,Taiwan
Tel: +886 2 26099301
Fax: +886 2 26099303

6.6. Conducted Calibration Setup

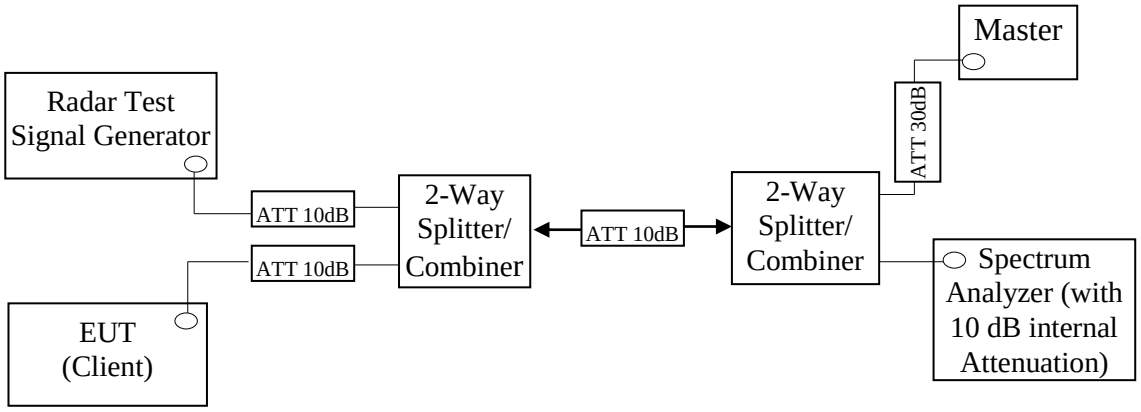

6.7. Radar Waveform Calibration Procedure

The measured frequency is 5260MHz and 5310MHz. The radar signal was the same as transmitted channels, and injected into the antenna port of AP (master) or Client Device with Radar Detection, measured the channel closing transmission time and channel move time. The calibrated conducted detection threshold level is set to -62dBm. The tested level is lower than required level hence it provides margin to the limit.

6.8. Calibration Deviation

There is no deviation with the original standard.

This test report may be reproduced in full only. The document may only be updated by Audix Technology Corp. personnel. Any changes will be noted in the Document History section of the report.

Audix Technology Corp.
No. 53-11, Dingfu, Linkou, Dist.,
New Taipei City244,Taiwan
Tel: +886 2 26099301
Fax: +886 2 26099303

6.9. Radar Waveform Calibration Result

DFS detection threshold level and the burst of pulses on the Channel frequency

20MHz

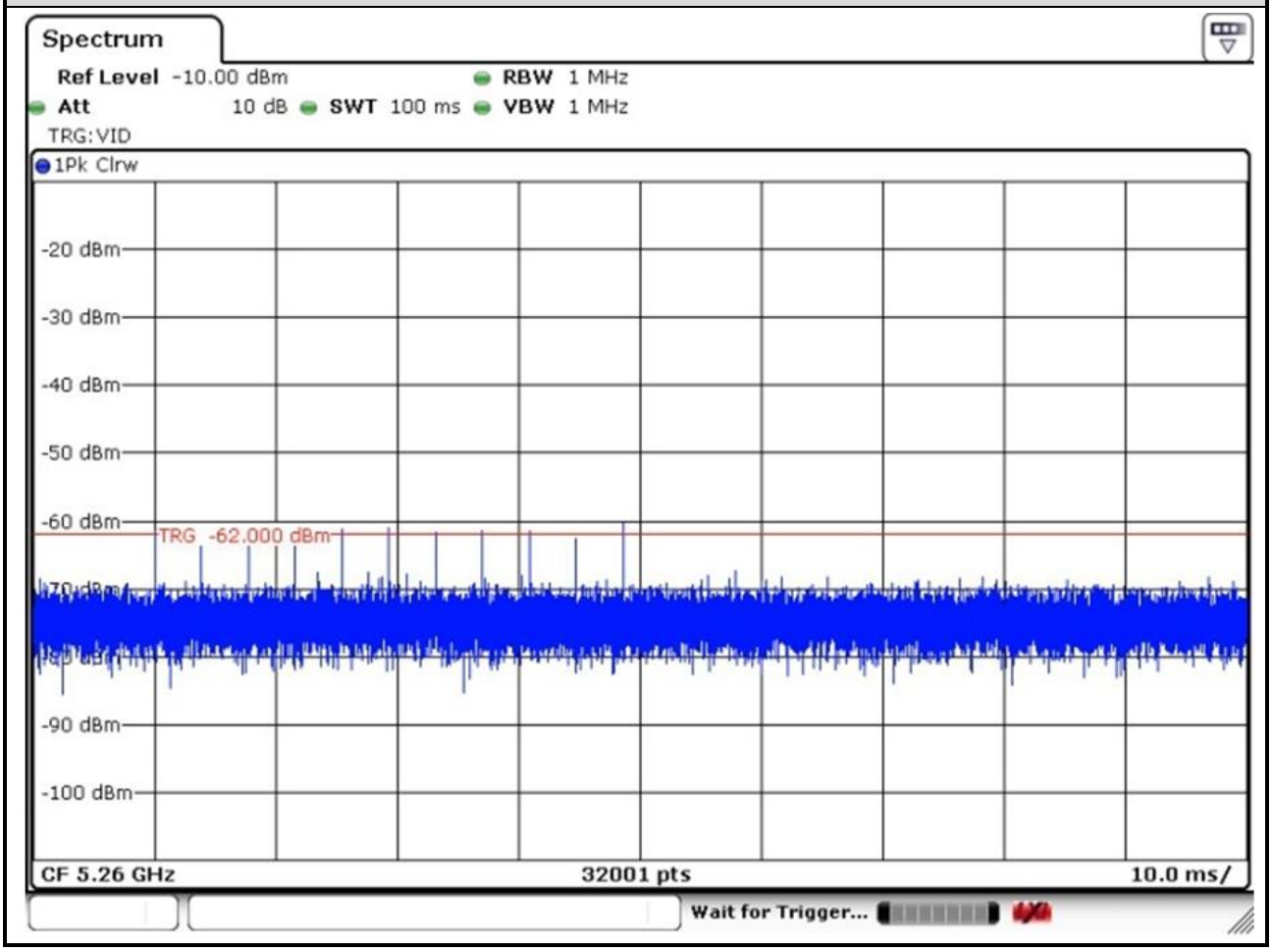

This test report may be reproduced in full only. The document may only be updated by Audix Technology Corp. personnel. Any changes will be noted in the Document History section of the report.

Audix Technology Corp.
No. 53-11, Dingfu, Linkou, Dist.,
New Taipei City244,Taiwan
Tel: +886 2 26099301
Fax: +886 2 26099303

7. TEST SETUP AND TEST RESULT

7.1. Test Setup

7.1.1. Test Setup Diagram

Following is the test setup for generated the radar waveforms and used to monitor UNII device.

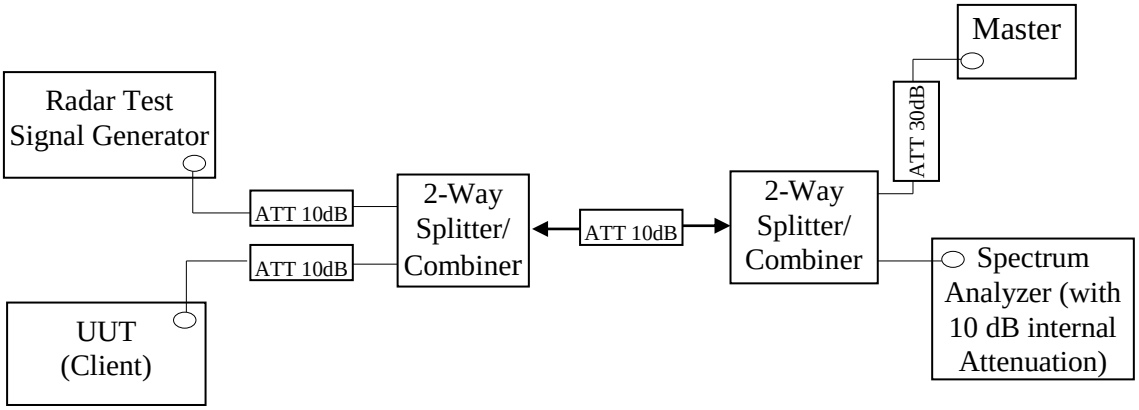

7.1.2. Test Setup Operation

System testing was performed with the designated MPEG test file that streams full motion video from the Access Point to Client in full motion video mode using the media player with the V2.61 Codec package. This file is used by IP and Frame based systems for loading the test channel during the in-service compliance testing of the U-NII device.
The waveform parameters from within the bounds of the signal type are selected randomly using uniform distribution.
A spectrum analyzer is used as a monitor to verify that the EUT has vacated the Channel within the (Channel Closing Transmission Time and Channel Move Time, and does not transmit on a Channel during the Non-Occupancy Period after the detection and Channel move. It is also used to monitor EUT transmissions during the Channel Availability Check Time.

This test report may be reproduced in full only. The document may only be updated by Audix Technology Corp. personnel. Any changes will be noted in the Document History section of the report.

Audix Technology Corp.
No. 53-11, Dingfu, Linkou, Dist.,
New Taipei City244,Taiwan

Tel: +886 2 26099301
Fax: +886 2 26099303

7.1.3. Test Setup for Data Traffic Plot

Test Date	2018/10/31	Temp./Hum.	23℃/54%

Test Mode: 20MHz
TX 5260MHz

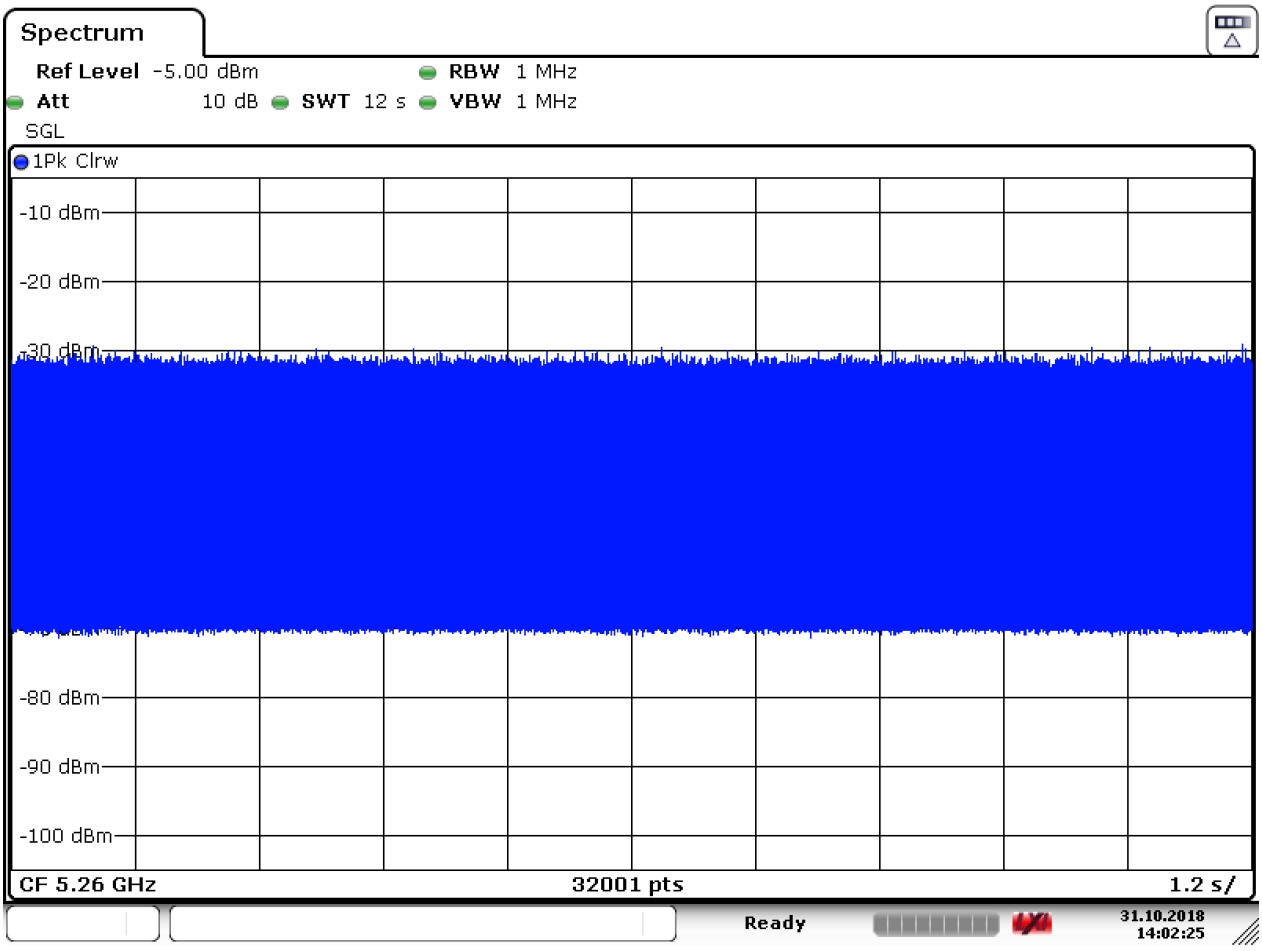

Date: 31.OCT.2018 14:02:25

This test report may be reproduced in full only. The document may only be updated by Audix Technology Corp. personnel. Any changes will be noted in the Document History section of the report.

Audix Technology Corp.
No. 53-11, Dingfu, Linkou, Dist.,
New Taipei City244,Taiwan
Tel: +886 2 26099301
Fax: +886 2 26099303

7.2. Channel Move Time, Channel Closing Transmission Time, Non-Occupancy Period, Non-Associated Client Beacon Measurement

7.2.1. Limit

Parameter	Value
Channel Move Time	10 seconds See Note 1.
Channel Closing Transmission Time	200 milliseconds + an aggregate of 60 milliseconds over remaining 10 second period. See Notes 1 and 2.
Non-Occupancy Period	Non-Occupancy Period time is 30 minute during which a Channel will not be utilized after a Radar Waveform is detected on that Channel
Non-Associated Client Beacon	The non-associated Client Beacon Test is during the 30 minutes observation time. The EUT should not make any transmissions in the DFS band after EUT power up.

Note 1: The instant that the Channel Move Time and the Channel Closing Transmission Time begins is as follows:

a. For the Short Pulse Radar Test Signals this instant is the end of the Burst.
b. For the Frequency Hopping radar Test Signal, this instant is the end of the last radar Burst generated.
c. For the Long Pulse Radar Test Signal this instant is the end of the 12 second period defining the Radar Waveform.

Note 2: The Channel Closing Transmission Time is comprised of 200 milliseconds starting at the beginning of the Channel Move Time plus any additional intermittent control signals required to facilitate a Channel move (an aggregate of 60 milliseconds) during the remainder of the 10 second period. The aggregate duration of control signals will not count quiet periods in between transmissions.

This test report may be reproduced in full only. The document may only be updated by Audix Technology Corp. personnel. Any changes will be noted in the Document History section of the report.

Audix Technology Corp.
No. 53-11, Dingfu, Linkou, Dist.,
New Taipei City244,Taiwan
Tel: +886 2 26099301
Fax: +886 2 26099303

7.2.2. Test Procedures

- When a radar Burst with a level equal to the DFS Detection Threshold + 1dB is generated on the operating channel of the U-NII device. A U-NII device operating as a Client Device will associate with the Master of channel. Stream the MPEG test file from the Master Device to the Client Device on the selected channel for entire period of the test. At time to the radar waveform generator sends a Burst of pulses for each of the radar types at Detection Threshold + 1dB.
- Observe the transmissions of the EUT at the end of the radar Burst on the Operating channel. Measure and record the transmissions from the EUT during the observation time [Channel Move Time]. One 10 Second plot bee reported for the short Pulse Radar type 1-4 and one for the Long Pulse Radar Type test in a 22 second plot. The plot for the Short Pulse Radar types start at the end of the radar burst. The Channel Move Time will be calculated based on the plot of the short Pulse Radar Type. The Long Pulse Radar Type plot show the device ceased transmissions within the 10 second window after detection has occurred. The plot for the Long Pulse Radar type should start at the beginning of the 12 second waveform.
- Measure the EUT for more than 30 minutes following the channel close/move time to verify that the EUT does not resume only transmissions on this channel.

This test report may be reproduced in full only. The document may only be updated by Audix Technology Corp. personnel. Any changes will be noted in the Document History section of the report.

Audix Technology Corp.
No. 53-11, Dingfu, Linkou, Dist.,
New Taipei City244,Taiwan

Tel: +886 2 26099301
Fax: +886 2 26099303

7.2.3. Test Result for Channel Closing Transmission Time& Channel Move Time

Test Date	2018/10/31	Temp./Hum.	23℃/54%
Test Mode	20MHz	Frequency	TX 5260MHz

Channel Closing Transmission Time	Channel move time < 10 S
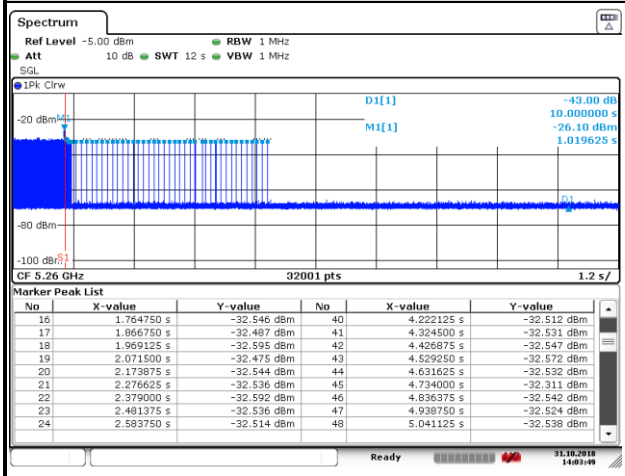	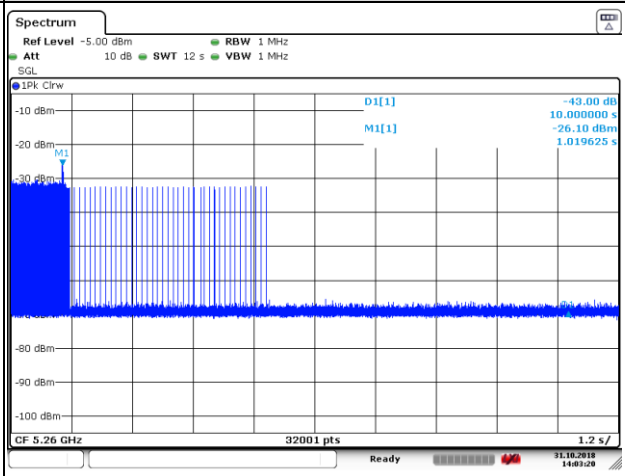

Channel Closing Transmission Time Calculated	
Sweep Time(S) sec	12
Sweep points (P)	32001
Number of Sweep points in 10 sec (N)	48
Channel Closing Time (C) ms	18.00

Channel closing time is calculated from C=N* dwell; where dwell is the occupancy time per sweep point calculated by the formula: dwell=S/P. N is the number of sweep points indicating transmission after S1; where S1 is the radar signal detected

This test report may be reproduced in full only. The document may only be updated by Audix Technology Corp. personnel. Any changes will be noted in the Document History section of the report.

Audix Technology Corp.
No. 53-11, Dingfu, Linkou, Dist.,
New Taipei City244,Taiwan

Tel: +886 2 26099301
Fax: +886 2 26099303

7.2.4. Test Result for Non-Occupancy Period

Test Date	2018/10/31	Temp./Hum.	23℃/54%

Test Mode: 20MHz
TX 5260MHz

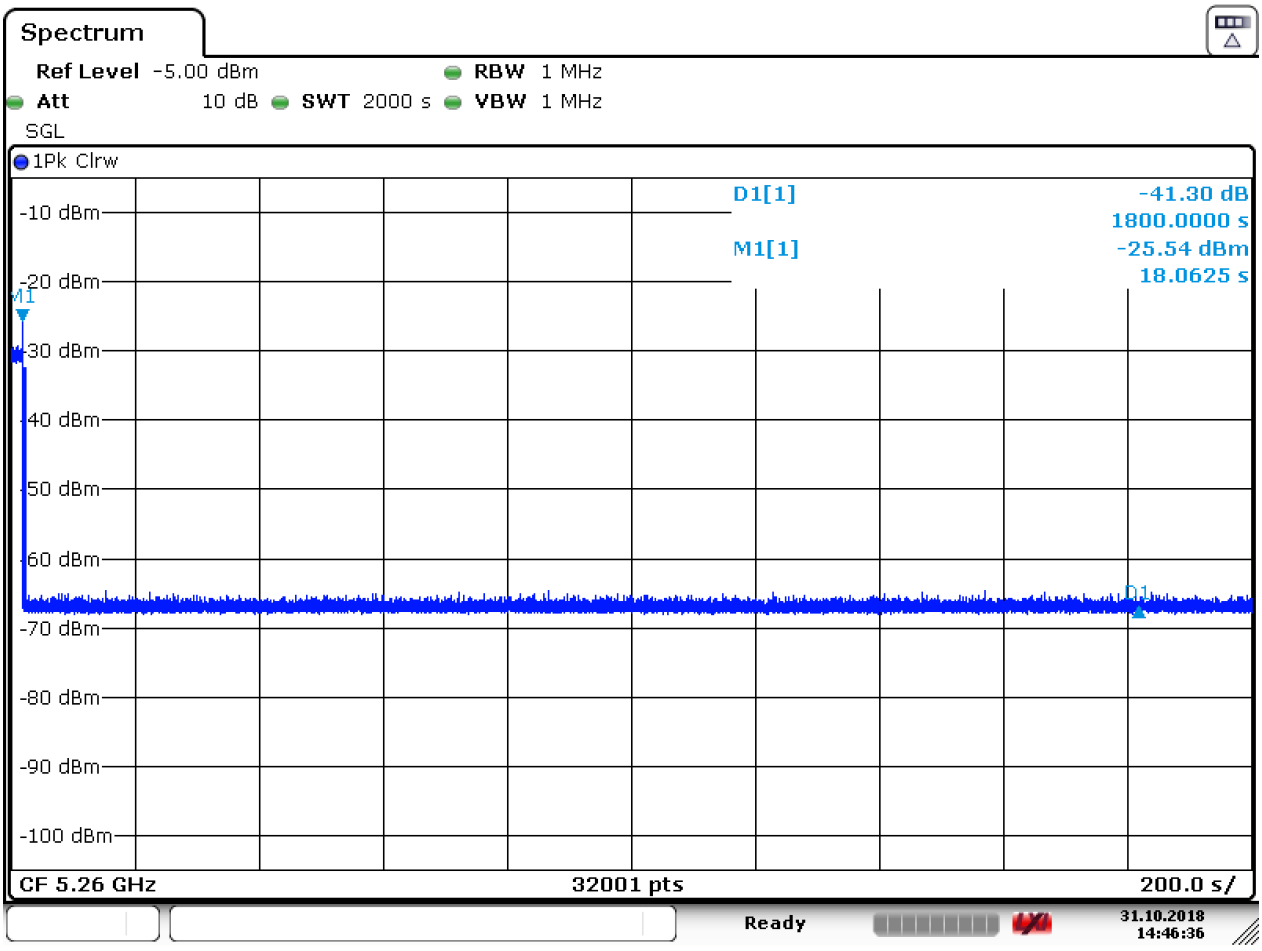

This test report may be reproduced in full only. The document may only be updated by Audix Technology Corp. personnel. Any changes will be noted in the Document History section of the report.

Audix Technology Corp.
No. 53-11, Dingfu, Linkou, Dist.,
New Taipei City244,Taiwan

Tel: +886 2 26099301
Fax: +886 2 26099303

APPDNDIX A

TEST PHOTOGRAPHS

(Model: 17Z990)

This test report may be reproduced in full only. The document may only be updated by Audix Technology Corp. personnel. Any changes will be noted in the Document History section of the report.