SAR TEST REPORT

HCT CO., LTD

EUT Type:	Cellular/PCS GSM/GPRS/EDGE/HSDPA Phone with Bluetooth and WLAN
FCC ID:	BEJP690G
Model:	LG-P690g
Additional Model	P690g,LGP690g,LG-P690G,P690G,LGP690G
Date of Issue:	June 20, 2011
Test report No.:	HCTA1106FS07
Test Laboratory:	**HCT CO., LTD.** 105-1, Jangam-ri, Majang-myeon, Icheon-si, Gyeonggi-do, Korea 467-811 TEL: +82 31 645 6485 FAX: +82 31 645 6401
Applicant :	**LG Electronics, Inc.** 60-39, Gasan-Dong, Gumchon-Gu, Seoul 153-023, Korea Tel: +82-2-2033-1113 Fax: +82-2-2033-1222
Testing has been carried out in accordance with:	RSS-102 Issue 4; Health Canada Safety Code 6 47CFR §2.1093 FCC OET Bulletin 65(Edition 97-01), Supplement C (Edition 01-01) ANSI/ IEEE C95.1 – 1992 IEEE 1528-2003
Test result:	The tested device complies with the requirements in respect of all parameters subject to the test. The test results and statements relate only to the items tested. The test report shall not be reproduced except in full, without written approval of the laboratory.
Signature	Report prepared by : Young-Soo Jang Test Engineer of SAR Part Approved by : Jae-Sang So Manager of SAR Part

Table of Contents

1. INTRODUCTION 3
2. DESCRIPTION OF DEVICE 4
3. DESCRIPTION OF TEST EQUIPMENT 5
4. SAR MEASUREMENT PROCEDURE 12
5. DESCRIPTION OF TEST POSITION 13
5.1 HEAD POSITION 13
5.2 Body Holster/Belt Clip Configurations 14
6. MEASUREMENT UNCERTAINTY 15
7. ANSI/ IEEE C95.1 - 1992 RF EXPOSURE LIMITS 16
8. SYSTEM VERIFICATION 17
8.1 Tissue Verification 17
8.2 System Validation 17
9. SAR Testing with IEEE 802.11 a/b/g Transmitters 18
10. RF CONDUCTED POWER 19
10.1 Procedures Used to Establish RF Signal for SAR 19
10.2 SAR Measurement Conditions for UMTS 19
11. Mobile Hotspot Side for SAR Testing 22
12. SAR Evaluation Considerations for Handsets with Multiple Transmitters and Antennas 23
13. SAR TEST DATA SUMMARY 25
13.1 Measurement Results (GSM850 Head SAR) 25
13.2 Measurement Results (GSM1900 Head SAR) 26
13.3 Measurement Results (WCDMA850 Head SAR) 27
13.4 Measurement Results (WCDMA1900 Head SAR) 28
13.5 Measurement Results (802.11b/g/n Head) 29
13.6 Measurement Results (GSM850 Hotspot Body SAR) 30
13.7 Measurement Results (GSM1900 Hotspot Body SAR) 31
13.8 Measurement Results (WCDMA850 Hotspot Body SAR) 32
13.9 Measurement Results (WCDMA1900 Hotspot Body SAR) 33
13.10 Measurement Results (802.11b/g/n Hotspot Body SAR) 34
14. CONCLUSION 35
15. REFERENCES 36
Attachment 1. – SAR Test Plots 37
Attachment 2. – Dipole Validation Plots 94
Attachment 3. – Probe Calibration Data 107
Attachment 4. – Dipole Calibration Data 119

1. INTRODUCTION

The FCC has adopted the guidelines for evaluating the environmental effects of radio frequency radiation in ET Docket 93-62 on Aug. 6, 1996 to protect the public and workers from the potential hazards of RF emissions due to FCC-regulated portable devices.

The safety limits used for the environmental evaluation measurements are based on the criteria published by the American National Standards Institute (ANSI) for localized specific absorption rate (SAR) in IEEE/ANSI C95.1-2005 Standard for Safety Levels with Respect to Human Exposure to Radio Frequency Electromagnetic Fields, 3 kHz to 300 GHz. 1992 by the Institute of Electrical and Electronics Engineers, Inc., New York, New York 10017. The measurement procedure described in IEEE/ANSI C95.3-1992 Recommended Practice for the Measurement of Potentially Hazardous Electromagnetic Fields - RF and Microwave is used for guidance in measuring SAR due to the RF radiation exposure from the Equipment Under Test (EUT). These criteria for SAR evaluation are similar to those recommended by the National Council on Radiation Protection and Measurements (NCRP) in Biological Effects and Exposure Criteria for Radio frequency Electromagnetic Fields," NCRP Report No. 86 NCRP, 1986, Bethesda, MD 20814. SAR is a measure of the rate of energy absorption due to exposure to an RF transmitting source. SAR values have been related to threshold levels for potential biological hazards.

SAR Definition

Specific Absorption Rate (SAR) is defined as the time derivative of the incremental electromagnetic energy (d*W*) absorbed by (dissipated in) an incremental mass (d*m*) contained in a volume element (d*V*) of a given density (*r*). It is also defined as the rate of RF energy absorption per unit mass at a point in an absorbing body.

$$SAR = \frac{d}{dt}\left(\frac{dU}{dm}\right) = \frac{d}{dt}\left(\frac{dU}{\rho\, dv}\right)$$

Figure 2. SAR Mathematical Equation

SAR is expressed in units of Watts per Kilogram (W/kg).

$$SAR = \sigma E^2 / \rho$$

where:

σ = conductivity of the tissue-simulant material (S/m)

ρ = mass density of the tissue-simulant material (kg/m^3)

E = Total RMS electric field strength (V/m)

NOTE: The primary factors that control rate of energy absorption were found to be the wavelength of the incident field in relations to the dimensions and geometry of the irradiated organism, the orientation of the organism in relation to the polarity of field vectors, the presence of reflecting surfaces, and whether conductive contact is made by the organism with a ground plane.

2. DESCRIPTION OF DEVICE

Environmental evaluation measurements of specific absorption rate (SAR) distributions in emulated human head and body tissues exposed to radio frequency (RF) radiation from wireless portable devices for compliance with the rules and regulations of the U.S. Federal Communications Commission (FCC).

EUT Type	Cellular/PCS GSM/GPRS/EDGE/HSDPA Phone with Bluetooth and WLAN		
FCC ID:	BEJP690G		
Model:	LG-P690G		
Additional Model	P690g,LGP690g,LG-P690G,P690G,LGP690G		
Trade Name	LG	Serial Number(s)	#1
Application Type	Certification		
Mode(s) of Operation	GSM850/GSM1900/WCDMA850/WCDMA1900/802.11b/g/n		
Tx Frequency	824.20 - 848.80 MHz (GSM850) 1 850.20 – 1 909.80 MHz (GSM1900) 826.4~846.6 MHz (WCDMA850) 1 852.4 – 1 907.6 MHz (WCDMA1900) 2 412- 2 462 MHz (WLAN)		
Rx Frequency	869.20 - 893.80 MHz (GSM850) 1 930.20 – 1 989.80 MHz (GSM1900) 871.4 - 891.6 MHz (WCDMA850) 1 932.4 – 1 987.6 MHz (WCDMA1900) 2 412- 2 462 MHz (WLAN)		
FCC Classification	Licensed Portable Transmitter Held to Ear (PCE)		
Production Unit or Identical Prototype	Prototype		
Max SAR	0.311 W/kg GSM850 Head SAR / 1 W/kg GSM850 Body SAR 0.363 W/kg GSM1900 Head SAR / 0.383 W/kg GSM1900 Body SAR 0.346 W/kg WCDMA850 Head SAR / 0.750 W/kg WCDMA850 Body SAR 0.764 W/kg WCDMA1900 Head SAR / 0.749 W/kg WCDMA1900 Body SAR 0.422 W/kg 802.11b/g/n Head SAR / 0.082 W/kg 802.11b/g/n Hotspot Body		
Date(s) of Tests	June 13, 2011 ~ June 14, 2011		
Antenna Type	Intenna		

3. DESCRIPTION OF TEST EQUIPMENT

3.1 SAR MEASUREMENT SETUP

These measurements are performed using the DASY4 automated dosimetric assessment system. It is made by Schmid & Partner Engineering AG (SPEAG) in Zurich, Switzerland. It consists of high precision robotics system (Staubli), robot controller, Pentium III computer, near-field probe, probe alignment sensor, and the generic twin phantom containing the brain equivalent material. The robot is a six-axis industrial robot performing precise movements to position the probe to the location (points) of maximum electromagnetic field (EMF) (see Figure.3.1).

A cell controller system contains the power supply, robot controller, teach pendant (Joystick), and remote control, is used to drive the robot motors. The PC consists of the HP Pentium IV 3.0 GHz computer with Windows XP system and SAR Measurement Software DASY4, A/D interface card, monitor, mouse, and keyboard. The Staubli Robot is connected to the cell controller to allow software manipulation of the robot. A data acquisition electronic (DAE) circuit performs the signal amplification, signal multiplexing, AD-conversion, offset measurements, mechanical surface detection, collision detection, etc. is connected to the Electro-optical coupler (EOC). The EOC performs the conversion from the optical into digital electric signal of the DAE and transfers data to the PC plug-in card.

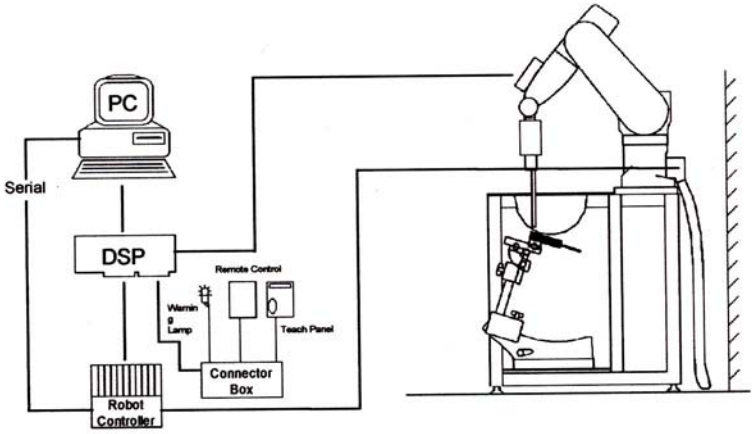

Figure 3.1 HCT SAR Lab. Test Measurement Set-up

The DAE4 consists of a highly sensitive electrometer-grade preamplifier with auto-zeroing, a channel and gain-switching multiplexer, a fast 16 bit AD-converter and a command decoder and control logic unit. Transmission to the PC-card is accomplished through an optical downlink for data and status information and an optical uplink for commands and clock lines. The mechanical probe mounting device includes two different sensor systems for frontal and sidewise probe contacts. They are also used for mechanical surface detection and probe collision detection. The robot uses its own controller with a built in VME-bus computer. The system is described in detail in.

3.2 DASY4 E-FIELD PROBE SYSTEM

3.1 ES3DV3 Probe Specification

Construction	Symmetrical design with triangular core Interleaved sensors Built-in shielding against static charges PEEK enclosure material (resistant to organic solvents, e.g., DGBE)
Calibration	Basic Broad Band Calibration in air Conversion Factors (CF) for HSL 900 and HSL 1810 Additional CF for other liquids and frequencies upon request
Frequency	10 MHz to 4 GHz; Linearity: ± 0.2 dB (30 MHz to 4 GHz)
Directivity	± 0.2 dB in HSL (rotation around probe axis) ± 0.3 dB in tissue material (rotation normal to probe axis)
Dynamic Range	5 µW/g to > 100 mW/g; Linearity: ± 0.2 dB
Dimensions	Overall length: 330 mm (Tip: 20 mm) Tip diameter: 3.9 mm (Body: 12 mm) Distance from probe tip to dipole centers: 2.0 mm
Application	General dosimetry up to 4 GHz Dosimetry in strong gradient fields Compliance tests of mobile phones

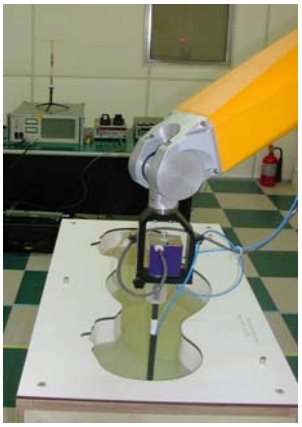

Figure 3.1 Photograph of the probe and the Phantom

Figure 3.2 ES3DV3 E-field Probe

The SAR measurements were conducted with the dosimetric probe ES3DV3, designed in the classical triangular configuration and optimized for dosimetric evaluation. The probe is constructed using the thick film technique; with printed resistive lines on ceramic substrates. The probe is equipped with an optical multifiber line ending at the front of the probe tip. It is connected to the EOC box on the robot arm and provides an automatic detection of the phantom surface. Half of the fibers are connected to a pulsed infrared transmitter, the other half to a synchronized receiver. As the probe approaches the surface, the reflection from the surface produces a coupling from the transmitting to the receiving fibers. This reflection increases first during the approach, reaches a mMaximum and then decreases. If the probe is flatly touching the surface, the coupling is zero. The distance of the coupling mMaximum to the surface is independent of the surface reflectivity and largely independent of the surface to probe angle.
The DASY4 software reads the reflection during a software approach and looks for the mMaximum using a 2nd order fitting.
The approach is stopped at reaching the mMaximum.

3.3 PROBE CALIBRATION PROCESS

3.3.1 E-Probe Calibration

Each probe is calibrated according to a dosimetric assessment procedure with an accuracy better than ± 10 %. The spherical isotropy was evaluated with the proper procedure and found to be better than ± 0.25 dB. The sensitivity parameters (NormX, NormY, NormZ), the diode compression parameter (DCP) and the conversion factor (ConvF) of the probe is tested.

The free space E-field from amplified probe outputs is determined in a test chamber. This is performed in a TEM cell for frequencies bellow 1 GHz, and in a waveguide above 1 GHz for free space. For the free space calibration, the probe is placed in the volumetric center of the cavity and at the proper orientation with the field. The probe is then rotated 360 degrees.

E-field temperature correlation calibration is performed in a flat phantom filled with the appropriate simulated brain tissue. The measured free space E-field in the medium correlates to temperature rise in a dielectric medium. For temperature correlation calibration a RF transparent thermistor-based temperature probe is used in conjunction with the E-field probe.

$$SAR = C\frac{\Delta T}{\Delta t}$$

where:

Δt = exposure time (30 seconds),

C = heat capacity of tissue (brain or muscle),

ΔT = temperature increase due to RF exposure.

SAR is proportional to $\Delta T / \Delta t$, the initial rate of tissue heating, before thermal diffusion takes place. Now it's possible to quantify the electric field in the simulated tissue by equating the thermally derived SAR to the E- field;

$$SAR = \frac{|E|^2 \cdot \sigma}{\rho}$$

where:

σ = simulated tissue conductivity,

ρ = Tissue density (1.25 g/cm^3 for brain tissue)

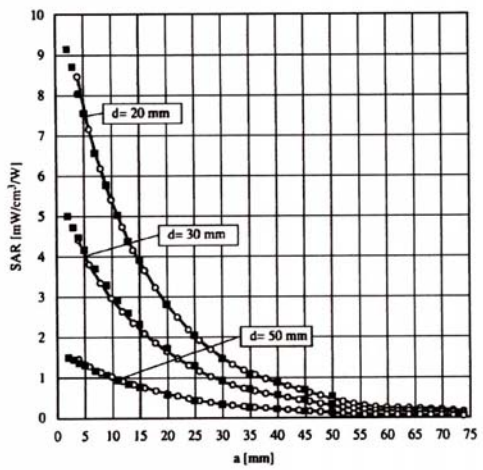

Figure 3.4 E-Field and Temperature measurements at 900 MHz

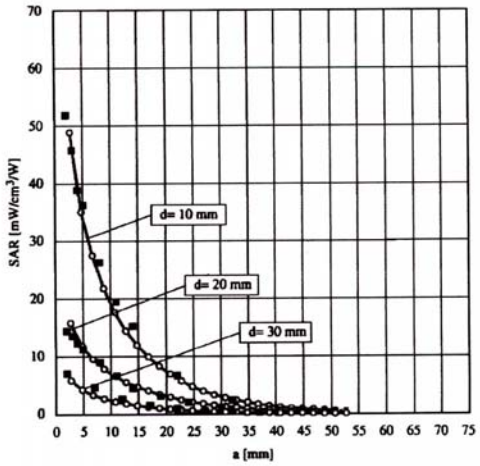

Figure 3.5 E-Field and temperature measurements at 1.8 GHz

3.3.2 Data Extrapolation

The DASY4 software automatically executes the following procedures to calculate the field units from the microvolt readings at the probe connector. The first step of the evaluation is a linearization of the filtered input signal to account for the compression characteristics of the detector diode. The compensation depends on the input signal, the diode type and the DC-transmission factor from the diode to the evaluation electronics. If the exciting field is pulsed, the crest factor of the signal must be known to correctly compensate for peak power. The formula for each channel can be given like below;

$$V_i = U_i + U_i^2 \cdot \frac{cf}{dcp_i}$$

with
V_i = compensated signal of channel i (i=x,y,z)
U_i = input signal of channel i (i=x,y,z)
cf = crest factor of exciting field (DASY parameter)
dcp_i = diode compression point (DASY parameter)

From the compensated input signals the primary field data for each channel can be evaluated:

E-field probes:

$$E_i = \sqrt{\frac{V_i}{Norm_i \cdot ConvF}}$$

with
V_i = compensated signal of channel i (i = x,y,z)
$Norm_i$ = sensor sensitivity of channel i (i = x,y,z) $\mu V/(V/m)^2$ for E-field probes
ConvF = sensitivity of enhancement in solution
E_i = electric field strength of channel i in V/m

The RSS value of the field components gives the total field strength (Hermetian magnitude):

$$E_{tot} = \sqrt{E_x^2 + E_y^2 + E_z^2}$$

The primary field data are used to calculate the derived field units.

$$SAR = E_{tot}^2 \cdot \frac{\sigma}{\rho \cdot 1000}$$

with
SAR = local specific absorption rate in W/g
E_{tot} = total field strength in V/m
σ = conductivity in [mho/m] or [Siemens/m]
ρ = equivalent tissue density in g/cm^3

The power flow density is calculated assuming the excitation field to be a free space field.

$$P_{pwe} = \frac{E_{tot}^2}{3770}$$

with
P_{pwe} = equivalent power density of a plane wave in W/cm^2
E_{tot} = total electric field strength in V/m

3.4 SAM Phantom

The shell corresponds to the specifications of the Specific Anthropomorphic Mannequin (SAM) phantom defined in IEEE 1528 and IEC 62209-1. It enables the dosimetric evaluation of left and right hand phone usage as well as body mounted usage at the flat phantom region. A cover prevents evaporation of the liquid. Reference markings on the phantom allow the complete setup of all predefined phantom positions and measurement grids by teaching three points with the robot.

Figure 3.6 SAM Phantom

Shell Thickness	2.0 mm
Filling Volume	about 25 L
Dimensions	1 000 mm x 500 mm (L x W)

3.5 Device Holder for Transmitters

In combination with the SAM Phantom V 4.0, the Mounting Device (POM) enables the rotation of the mounted transmitter in spherical coordinates whereby the rotation points is the ear opening. The devices can be easily, accurately, and repeatable positioned according to the FCC and CENELEC specifications. The device holder can be locked at different phantom locations (left head, right head, flat phantom).

Note: A simulating human hand is not used due to the complex anatomical and geometrical structure of the hand that may produced infinite number of configurations. To produce the Worst-case condition (the hand absorbs antenna output power), the hand is omitted during the tests.

Figure 3.7 Device Holder

3.6 Brain & Muscle Simulating Mixture Characterization

The brain and muscle mixtures consist of a viscous gel using hydrox-ethyl cellulose (HEC) gelling agent and saline solution (see Table 3.1). Preservation with a bacteriacide is added and visual inspection is made to make sure air bubbles are not trapped during the mixing process. The mixture is calibrated to obtain proper dielectric constant (permittivity) and conductivity of the desired tissue. The mixture characterizations used for the brain and muscle tissue simulating liquids are according to the data by C. Gabriel and G. Hartsgrove.

Ingredients (% by weight)	Frequency (MHz)									
	450		835		915		1 900		2 450	
Tissue Type	Head	Body	Head	Body	Head	Body	Head	Body	Head	Body
Water	38.56	51.16	41.45	52.4	41.05	56.0	54.9	40.4	62.7	73.2
Salt (NaCl)	3.95	1.49	1.45	1.4	1.35	0.76	0.18	0.5	0.5	0.04
Sugar	56.32	46.78	56.0	45.0	56.5	41.76	0.0	58.0	0.0	0.0
HEC	0.98	0.52	1.0	1.0	1.0	1.21	0.0	1.0	0.0	0.0
Bactericide	0.19	0.05	0.1	0.1	0.1	0.27	0.0	0.1	0.0	0.0
Triton X-100	0.0	0.0	0.0	0.0	0.0	0.0	0.0	0.0	36.8	0.0
DGBE	0.0	0.0	0.0	0.0	0.0	0.0	44.92	0.0	0.0	26.7

Salt:	99 % Pure Sodium Chloride	Sugar:	98 % Pure Sucrose
Water:	De-ionized, 16M resistivity	HEC:	Hydroxyethyl Cellulose
DGBE:	99 % Di(ethylene glycol) butyl ether,[2-(2-butoxyethoxy) ethanol]		
Triton X-100(ultra pure):	Polyethylene glycol mono[4-(1,1,3,3-tetramethylbutyl)phenyl] ether		

Table 3.1 Composition of the Tissue Equivalent Matter

3.7 SAR TEST EQUIPMENT

Manufacturer	Type / Model	S/N	Calib. Date	Calib.Interval	Calib.Due
SPEAG	SAM Phantom	-	N/A	N/A	N/A
Staubli	Robot RX90L	F01/5K09A1/A/01	N/A	N/A	N/A
Staubli	Robot ControllerCS7MB	F99/5A82A1/C/01	N/A	N/A	N/A
HP	Pavilion t000_puffer	KRJ51201TV	N/A	N/A	N/A
SPEAG	Light Alignment Sensor	265	N/A	N/A	N/A
Staubli	Teach Pendant (Joystick)	D221340.01	N/A	N/A	N/A
SPEAG	DAE3	446	Sep. 21, 2010	Annual	Sep. 21, 2011
SPEAG	E-Field Probe ES3DV3	3161	Mar. 17, 2011	Annual	Mar. 17, 2012
SPEAG	Validation Dipole D835V2	441	May 16, 2011	Annual	May 16, 2012
SPEAG	Validation Dipole D1900V2	5d032	July 16, 2010	Annual	July 16, 2011
SPEAG	Validation Dipole D2450V2	743	Aug. 25, 2010	Annual	Aug. 25, 2011
Agilent	Power Meter(F) E4419B	MY41291386	Nov. 05, 2010	Annual	Nov. 05, 2011
Agilent	Power Sensor(G) 8481	MY41090870	Nov. 05, 2010	Annual	Nov. 05, 2011
HP	Dielectric Probe Kit	00721521	N/A	N/A	N/A
HP	Dual Directional Coupler	16072	Nov. 05, 2010	Annual	Nov. 05, 2011
R&S	Base Station CMU200	110740	July 26, 2010	Annual	July 26, 2011
Agilent	Base Station E5515C	GB44400269	Feb. 10, 2011	Annual	Feb. 10, 2012
HP	Signal Generator E4438C	MY42082646	Nov. 11, 2010	Annual	Nov. 11, 2011
HP	Network Analyzer 8753ES	JP39240221	Mar. 30, 2011	Annual	Mar. 30, 2012

NOTE:

The E-field probe was calibrated by SPEAG, by the waveguide technique procedure. Dipole Validation measurement is performed by HCT Lab. before each test. The brain simulating material is calibrated by HCT using the dielectric probe system and network analyzer to determine the conductivity and permittivity (dielectric constant) of the brain-equivalent material.

4. SAR MEASUREMENT PROCEDURE

The evaluation was performed with the following procedure:

1. The SAR value at a fixed location above the ear point was measured and was used as a reference value for assessing the power drop.

2. The SAR distribution at the exposed side of the head was measured at a distance of 3.9 mm from the inner surface of the shell. The area covered the entire dimension of the head and the horizontal grid spacing was 20 mm x 20 mm. Based on this data, the area of the maximum absorption was determined by spline interpolation.

3. Around this point, a volume of 32 mm x 32 mm x 30 mm was assessed by measuring 5 x 5 x 7 points. On this basis of this data set, the spatial peak SAR value was evaluated with the following procedure:

   a. The data at the surface were extrapolated, since the center of the dipoles is 2.7 mm away from the tip of the probe and the distance between the surface and the lowest measuring point is 1.2 mm. The extrapolation was based on a least square algorithm. A polynomial of the fourth order was calculated through the points in z-axes. This polynomial was then used to evaluate the points between the surface and the probe tip.
   b. The maximum interpolated value was searched with a straight-forward algorithm. Around this maximum the SAR values averaged over the spatial volumes (1 g or 10 g) were computed using the 3D-Spline interpolation algorithm. The 3D-spline is composed of three one-dimensional splines with the “Not a knot” condition (in x, y, and z directions. The volume was integrated with the trapezoidal algorithm. One thousand points (10 x 10 x 10) were interpolated to calculate the average.
   c. All neighboring volumes were evaluated until no neighboring volume with a higher average value was found.

4. The SAR value, at the same location as procedure #1, was re-measured. If the value changed by more than 5 %, the evaluation is repeated.

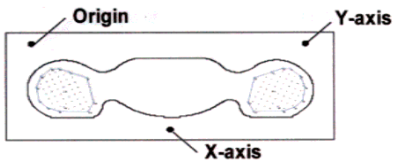

Figure 4.1 SAR Measurement Point in Area Scan

5. DESCRIPTION OF TEST POSITION

5.1 HEAD POSITION

The device was placed in a normal operating position with the Point A on the device, as illustrated in following drawing, aligned with the location of the RE(ERP) on the phantom. With the ear-piece pressed against the head, the vertical center line of the body of the handset was aligned with an imaginary plane consisting of the RE, LE and M. While maintaining these alignments, the body of the handset was gradually moved towards the cheek until any point on the mouth-piece or keypad contacted the cheek. This is a cheek/touch position. For ear/tilt position, while maintain the device aligned with the BM and FN lines, the device was pivot against ERP back for 15º or until the device antenna touch the phantom. Please refer to IEEE 1528-2003 illustration below.

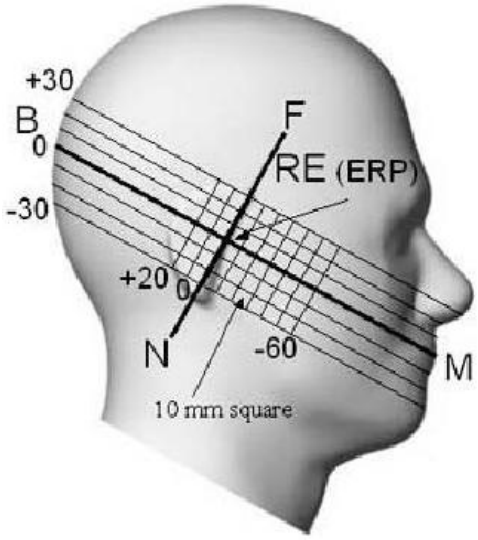

Figure 5.1 Side view of the phantom

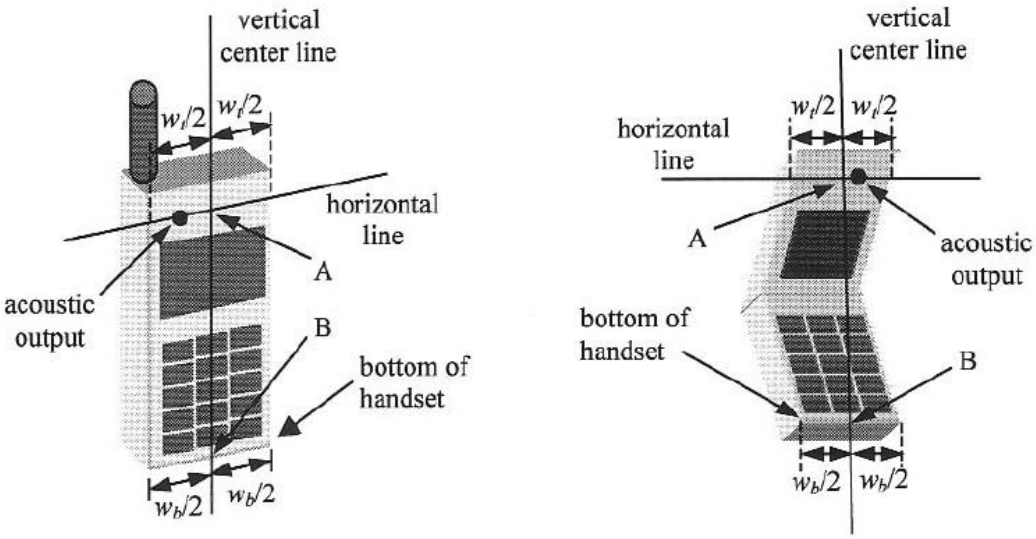

Figure 5.2 Handset vertical and horizontal reference lines

5.2 Body Holster/Belt Clip Configurations

Body-worn operating configurations are tested with the belt-clips and holsters attached to the device and positioned against a flat phantom in a normal use configuration. A device with a headset output is tested with a headset connected to the device. Body dielectric parameters are used.

Accessories for Body-worn operation configurations are divided into two categories: those that do not contain metallic components and those that contain metallic components. When multiple accessories that do not contain metallic components are supplied with the device, the device is tested with only the accessory that dictates the closest spacing to the body. Then multiple accessories that contain metallic components are tested with each accessory. If multiple accessory share an identical metallic component (i.e. the same metallic belt-clip used with different holsters with no other metallic components) only the accessory that dictates the closest spacing to the body is tested.

Body-worn accessories may not always be supplied or available as options for some Devices intended to be authorized for body-worn use. In this case, a test configuration with a separation distance between the back of the device and the flat phantom is used.

Since this EUT does not supply any body worn accessory to the end user a distance of 1.0 cm from the EUT back surface to the liquid interface is configured for the generic test.

"See the Test SET-UP Photo"

Transmitters that are designed to operate in front of a person's face, as in push-to-talk configurations, are tested for SAR compliance with the front of the device positioned to face the flat phantom. For devices that are carried next to the body such as a shoulder, waist or chest-worn transmitters, SAR compliance is tested with the accessory(ies), Including headsets and microphones, attached to the device and positioned against a flat phantom in a normal use configuration.

In all cases SAR measurements are performed to investigate the worst-case positioning. Worstcase positioning is then documented and used to perform Body SAR testing.

6. MEASUREMENT UNCERTAINTY

Error Description	Tol (± %)	Prob. dist.	Div.	c_i	Standard Uncertainty (± %)	v_{eff}
1. Measurement System						
Probe Calibration	6.00	N	1	1	6.00	∞
Axial Isotropy	4.70	R	1.73	0.7	1.90	∞
Hemispherical Isotropy	9.60	R	1.73	0.7	3.88	∞
Boundary Effects	1.00	R	1.73	1	0.58	∞
Linearity	4.70	R	1.73	1	2.71	∞
System Detection Limits	1.00	R	1.73	1	0.58	∞
Readout Electronics	0.30	N	1.00	1	0.30	∞
Response Time	0.8	R	1.73	1	0.46	∞
Integration Time	2.6	R	1.73	1	1.50	∞
RF Ambient Conditions	3.00	R	1.73	1	1.73	∞
Probe Positioner	0.40	R	1.73	1	0.23	∞
Probe Positioning	2.90	R	1.73	1	1.67	∞
Max SAR Eval	1.00	R	1.73	1	0.58	∞
2.Test Sample Related						
Device Positioning	2.90	N	1.00	1	2.90	145
Device Holder	3.60	N	1.00	1	3.60	5
Power Drift	5.00	R	1.73	1	2.89	∞
3.Phantom and Setup						
Phantom Uncertainty	4.00	R	1.73	1	2.31	∞
Liquid Conductivity(target)	5.00	R	1.73	0.64	1.85	∞
Liquid Conductivity(meas.)	2.07	N	1	0.64	1.32	9
Liquid Permitivity(target)	5.00	R	1.73	0.6	1.73	∞
Liquid Permitivity(meas.)	5.02	N	1	0.6	3.01	9
Combind Standard Uncertainty					11.13	
Coverage Factor for 95 %					$k=2$	
Expanded STD Uncertainty					22.25	

Table 6.1 Uncertainty (800 MHz- 2450 MHz)

7. ANSI/ IEEE C95.1 - 1992 RF EXPOSURE LIMITS

HUMAN EXPOSURE	UNCONTROLLED ENVIRONMENT General Population (W/kg) or (mW/g)	CONTROLLED ENVIRONMENT Occupational (W/kg) or (mW/g)
SPATIAL PEAK SAR * (Brain)	1.60	8.00
SPATIAL AVERAGE SAR ** (Whole Body)	0.08	0.40
SPATIAL PEAK SAR *** (Hands / Feet / Ankle / Wrist)	4.00	20.00

Table 7.1 Safety Limits for Partial Body Exposure

NOTES:

* The Spatial Peak value of the SAR averaged over any 1 g of tissue (defined as a tissue volume in the shape of a cube) and over the appropriate averaging time.

** The Spatial Average value of the SAR averaged over the whole-body.

******* The Spatial Peak value of the SAR averaged over any 10 g of tissue (defined as a tissue volume in the shape of a cube) and over the appropriate averaging time.

Uncontrolled Environments are defined as locations where there is the exposure of individuals who have no knowledge or control of their exposure.

Controlled Environments are defined as locations where there is exposure that may be incurred by persons who are aware of the potential for exposure, (i.e.as a result of employment or occupation).

8. SYSTEM VERIFICATION

8.1 Tissue Verification

Freq. [MHz]	Date	Liquid	Liquid Temp.[°C]	Parameters	Target Value	Measured Value	Deviation [%]	Limit [%]
835	June 13, 2011	Head	21.2	ε r	41.5	41.9	+ 0.96	± 5
				σ	0.90	0.857	- 4.78	± 5
835	June 13, 2011	Body	21.2	ε r	55.2	56.8	+ 2.90	± 5
				σ	0.97	0.98	+ 1.03	± 5
1 900	June 14, 2011	Head	21.1	ε r	40.0	39.2	- 2.00	± 5
				σ	1.40	1.43	+ 2.43	± 5
1 900	June 14, 2011	Body	21.1	ε r	53.3	53	- 0.56	± 5
				σ	1.52	1.57	+ 3.29	± 5
2 450	June 13, 2011	Head	21.2	ε r	39.2	38.7	- 1.28	± 5
				σ	1.80	1.81	+ 0.56	± 5
2 450	June 13, 2011	Body	21.2	ε r	52.7	51.9	- 1.52	± 5
				σ	1.95	1.94	- 0.51	± 5

8.2 System Validation

Prior to assessment, the system is verified to the ± 10 % of the specifications at 835 MHz / 1 900 MHz/ 2 450 MHz by using the system validation kit. (Graphic Plots Attached) * Input Power: 100 m W

Freq. [MHz]	Date	Liquid	Liquid Temp. [°C]	SAR Average	Target Value (SPEAG) (mW/g)	*Measured Value (mW/g)	Deviation [%]	Limit [%]
835	June 13, 2011	Head	21.2	1 g	9.34	0.953	+ 2.03	± 10
835	June 13, 2011	Body	21.2	1 g	9.45	0.944	- 0.11	± 10
1 900	June 14, 2011	Head	21.1	1 g	39.9	4.02	+ 0.75	± 10
1 900	June 14, 2011	Body	21.1	1 g	41.5	4.29	+ 3.37	± 10
2 450	June 13, 2011	Head	21.2	1 g	54	5.41	+ 0.19	± 10
2 450	June 13, 2011	Body	21.2	1 g	54	5.56	+ 2.96	± 10

9. SAR Testing with IEEE 802.11 a/b/g Transmitters

Normal Network operating configurations are not suitable for measuring the SAR of 802.11 a/b/g transmitters. Unpredictable fluctuations in network traffic and antenna diversity conditions can introduce undesirable variations in SAR results. The SAR for these devices should be measured using chipset based test mode software to ensure the results are consistent and reliable.

9.1 General Device Setup

Chipset based test mode software is hardware dependent and generally varies among manufacturers. The device operating parameters established in test mode for SAR measurements must be identical to those programmed in production units, including output power levels, amplifier gain settings and other RF performance tuning parameters. The test frequencies should correspond to actual channel frequencies defined for domestic use. SAR for devices with switched diversity should be measured with only one antenna transmitting at a time during each SAR measurement, according to a fixed modulation and data rate. The same data pattern should be used for all measurements.

9.2 Frequency Channel Configurations

80.11 a/b/g and 4.9 GHz operating modes are tested independently according to the service requirements in each frequency band. 80.211 b/g modes are tested on channels 1, 6 and 11.802.11a is tested for UNII operations on channels 36 and 48 in the 5.15-5.25 GHz band; channels 52 and 64 in the 5.25-5.35 GHz band; Channels 104, 116, 124 and 136 in the 5.470-5.725 GHz band; and channels 149 and 161 in the 5.8 GHz band. When 5.8 GHz § 15.247 is also available, channels 149, 157 and 165 should be tested instead of the UNII channels. 4.9 GHz is tested on channels 1, 10 and 5 or 6, whichever has the higher output power, for 5 MHz channels; channels 11,15 and 19 for 10 MHz channels; and channels 21 and 25 for 20 MHz channels.

These are referred to as the “default test channels”. 802.11g mode was evaluated only if the output power was 0.25 dB higher than the 802.11b mode.

Mode		GHz	Channel	Turbo Channel	“Default Test Channels”			
					§15.247		UNII	
					802.11b	802.11g		
802.11 b/g		2.412	1		√	∇		
		2.437	6	6	√	∇		
		2.462	11		√	∇		
802.11a	UNII	5.18	36				√	
		5.20	40	42 (5.21 GHz)				*
		5.22	44					*
		5.24	48	50 (5.25 GHz)			√	
		5.26	52				√	
		5.28	56	58 (5.29 GHz)				*
		5.30	60					*
		5.32	64				√	
		5.500	100	Unknown				*
		5.520	104				√	
		5.540	108					*
		5.560	112					*
		5.580	116				√	
		5.600	120					*
		5.620	124				√	
		5.640	128					*
		5.660	132					*
		5.680	136				√	
		5.700	140					*
	UNII or §15.247	5.745	149		√		√	
		5.765	153	152 (5.76 GHz)		*		*
		5.785	157		√			*
		5.805	161	160 (5.80 GHz)		*	√	
	§15.247	5.825	165		√			

802.11 Test Channels per FCC Requirements

10. RF CONDUCTED POWER

Power measurements were performed using a base station simulator under digital average power

10.1 Procedures Used to Establish RF Signal for SAR

The handset was placed into a simulated call using a base station simulator in a shielded chamber. Such test signals offer a consistent means for testing SAR and are recommended for evaluation SAR[4] SAR measurements were taken with a fully charged battery. In order to verify that the device was tested and maintained at full power, this was configured with the base station simulator. The SAR measurement Software calculates a reference point at the start and end of the test to check for power drifts. If conducted Power deviations of more then 5 % occurred, the tests were repeated.

10.2 SAR Measurement Conditions for UMTS

Body SAR is not required for handsets with HSDPA capabilities when the maximum average output of each RF channel with HSDPA active is less than ¼ dB higher than that measured without HSDPA using 12.2 kbps RMC and the maximum SAR for 12.2 kbps RMC is ≤ 75 % of the SAR limit. Otherwise, SAR is Measured for HSDPA, using an FRC with H-Set 1 in Sub-test 1 and a 12.2 kbps RMC configured in Test Loop Mode 1, using the highest body SAR configuration in 12.2 kbps RMC without HSDPA, on the maximum output channel with the body exposure configuration that results in the highest SAR in 12.2 kbps RMC for that RF channel.

10.2.1 Output Power Verification

Maximum output power is verified on the High, Middle and Low channels according to the general descriptions in section 5.2 of 3 GPP TS 34.121, using the appropriate RMC or AMR with TPC(transmit power control) set to all “1s”

10.2.2 Head SAR Measurements

SAR for head exposure configurations is measured using the 12.2 kbps RMC with TPC bits configured to all “1s”. SAR in AMR configurations is not required when the maximum average output of each RF channel for 12.2 kbps AMR is less than ¼ dB higher than that measured in 12.2 kbps RMC. Otherwise, SAR is measured on the maximum output channel in 12.2 AMR with a 3.4 kbps SRB (signaling radio bearer) using the exposure configuration that results in the highest SAR for that RF channel in 12.2 RMC.

10.2.3 Body SAR Measurement

SAR for body exposure configurations is measured using the 12.2 kbps RMC with the TPC bits all “1s”.

10.2.4 Handsets with Release 5 HSDPA

Body SAR is not required for handsets with HSDPA capabilities when the maximum average output of each RF channel with HSDPA active is less than ¼ dB higher than that measured without HSDPA using 12.2 kbps RMC and the maximum SAR for 12.2 kbps RMC is ≤ 75 % of the SAR limit. Otherwise, SAR is Measured for HSDPA, using an FRC with H-Set 1 in Sub-test 1 and a 12.2 kbps RMC configured in Test Loop Mode 1, using the highest body SAR configuration in 12.2 kbps RMC without HSDPA, on the maximum output channel with the body exposure configuration that results in the highest SAR in 12.2 kbps RMC for that RF channel.

Sub-Test 1 Setup for Release 5 HSDPA

Sub-test	β_c	β_d	β_d (SF)	β_c/β_d	β_{hs} (1)	CM (dB)(2)
1	2/15	15/15	64	2/15	4/15	0.0
2	12/15(3)	15/15(3)	64	12/15(3)	24/15	1.0
3	15/15	8/15	64	15/8	30/15	1.5
4	15/15	4/15	64	15/4	30/15	1.5

Note 1: Δ_{ACK}, Δ_{NACK} and $\Delta_{CQI} = 8 \Leftrightarrow A_{hs} = \beta_{hs}/\beta_c = 30/15 \Leftrightarrow \beta_{hs} = 30/15 * \beta_c$
Note 2: CM = 1 for β_c/β_d =12/15, β_{hs}/β_c=24/15.
Note 3: For subtest 2 the β_c/β_d ratio of 12/15 for the TFC during the measurement period (TF1, TF0) is achieved by setting the signaled gain factors for the reference TFC (TF1, TF1) to β_c = 11/15 and β_d = 15/15.

Band	Channel	Voice	GPRS Data				EDGE Data			
		GSM (dBm)	GPRS 1 TX Slot (dBm)	GPRS 2 TX Slot (dBm)	GPRS 3 TX Slot (dBm)	GPRS 4 TX Slot (dBm)	EDGE 1 TX Slot (dBm)	EDGE 2 TX Slot (dBm)	EDGE 3 TX Slot (dBm)	EDGE 4 TX Slot (dBm)
GSM850	128	33.00	33.00	30.67	28.89	28.12	27.54	25.6	23.62	22.57
	190	32.96	32.96	30.62	28.86	27.99	27.51	25.56	23.59	22.54
	251	32.92	32.92	30.66	28.91	27.95	27.46	25.52	23.55	22.5
GSM 1900	512	30.03	30.03	27.74	25.95	25.19	26.64	24.67	22.68	21.7
	661	29.80	29.8	27.73	25.85	24.86	26.4	24.43	22.44	21.46
	810	29.71	29.7	27.68	25.72	24.8	26.27	24.3	22.32	21.34

Table 10.1 GSM Conducted output powers (Burst-Average)

Band	Channel	Voice	GPRS Data				EDGE Data			
		GSM (dBm)	GPRS 1 TX Slot (dBm)	GPRS 2 TX Slot (dBm)	GPRS 3 TX Slot (dBm)	GPRS 4 TX Slot (dBm)	EDGE 1 TX Slot (dBm)	EDGE 2 TX Slot (dBm)	EDGE 3 TX Slot (dBm)	EDGE 4 TX Slot (dBm)
GSM850	128	23.97	23.97	24.65	24.63	25.11	18.51	19.58	19.36	19.56
	190	23.93	23.93	24.6	24.6	24.98	18.48	19.54	19.33	19.53
	251	23.89	23.89	24.64	24.65	24.94	18.43	19.5	19.29	19.49
GSM 1900	512	21	21	21.72	21.69	22.18	17.61	18.65	18.42	18.69
	661	20.77	20.77	21.71	21.59	21.85	17.37	18.41	18.18	18.45
	810	20.68	20.67	21.66	21.46	21.79	17.24	18.28	18.06	18.33

Table 10.2. GSM Conducted output powers (Frame-Average)

3GPP Release Version	**Mode**	**3GPP 34.121**	**Cellular Band [dBm]**			**PCS Band [dBm]**			**MPR**
		Subtest	UL 4132	UL 4183	UL 4233	UL 9262	UL 9400	UL 9538	
99	WCDMA	12.2kbps(RMC)	22.86	22.82	22.89	22.85	22.87	22.72	-
99	WCDMA	12.2kbps(AMR)	22.85	22.82	22.85	22.85	22.85	22.69	-
5	HSDPA	Subtest 1	22.68	22.61	22.75	22.85	22.77	22.59	0
5		Subtest 2	22.59	22.55	22.69	22.77	22.75	22.56	0
5		Subtest 3	22.10	22.07	22.23	22.35	22.32	22.09	0.5
5		Subtest 4	22.10	22.01	22.19	22.31	22.27	22.11	0.5

Table 2. WCDMA Conducted output powers

Band	Channel	Mbps (dBm)			
		1	2	5.5	11
IEEE 802.11b	1	13.89	13.73	14.02	13.83
	6	14.62	14.53	14.81	14.63
	11	15.20	15.04	15.34	15.08

Table 3. Average IEEE 802.11b Conducted output power

Band	Channel	Mbps (dBm)							
		6	9	12	18	24	36	48	54
IEEE 802.11g	1	12.03	11.96	11.76	11.55	11.40	11.14	10.73	10.71
	6	12.79	12.66	12.52	12.34	12.15	11.86	11.56	11.45
	11	13.27	13.11	12.99	12.82	12.68	12.28	12.11	11.89

Table 4. Average IEEE 802.11g Conducted output power

Band	Channel	Mbps (dBm)							
		6.5	13	20	26	39	52	58	65
IEEE 802.11n (HT-20)	1	10.89	10.66	10.37	10.21	9.86	9.62	9.54	9.38
	6	11.62	11.41	11.13	10.96	10.68	10.46	10.32	10.22
	11	12.05	11.86	11.63	11.51	11.23	10.94	10.75	10.64

Table 5. Average IEEE 802.11n Conducted output power

11. Mobile Hotspot Side for SAR Testing

11.1 SAR Test configurations

Mode	Back	Front	Top	Bottom	Right	Left
850 GPRS	Yes	Yes	No	Yes	Yes	Yes
1900 GPRS	Yes	Yes	No	Yes	Yes	Yes
WCDMA850	Yes	Yes	No	Yes	Yes	Yes
WCDMA1900	Yes	Yes	No	Yes	Yes	Yes
WLAN	Yes	Yes	Yes	No	Yes	No

11.2 Antenna and Device Information

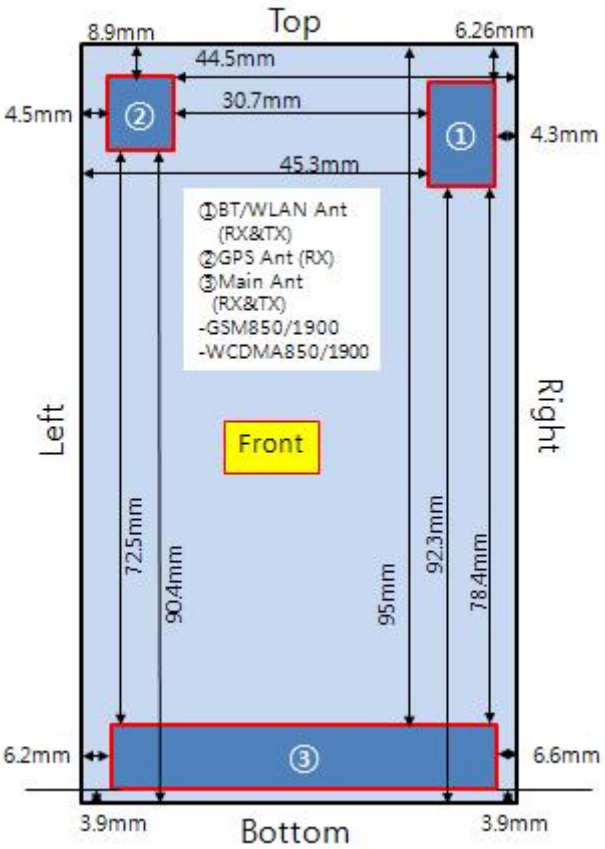

Note;

Per Oct.2010 TCB Workshop guidance, we performed the SAR testing at 1 cm from the top & bottom surfaces and also from side edges with a transmitting antenna ≤ 2.5 cm from an edge.

12. SAR Evaluation Considerations for Handsets with Multiple Transmitters and Antennas

12.1 SAR Evaluation Considerations

These procedures were followed according to FCC "SAR Evaluation Considerations for Handsets with Multiple Transmitters and Antennas", May 2008. The procedures are applicable to phones with built-in unlicensed transmitters, such as 802.11 a/b/g and Bluetooth devices.

	2.45	5.15 - 5.35	5.47 - 5.85	GHz
P_{Ref}	12	6	5	mW
Device output power should be rounded to the nearest mW to compare with values specified in this				

Table. 12.1 Output Power Thresholds for Unlicensed Transmitters

	Individual Transmitter	Simultaneous Transmission
Licensed Transmitters	Routine evaluation required	SAR not required: Unlicensed only ○ when stand-alone 1-g SAR is not required and antenna is ≥ 5 cm from other antennas Licensed & Unlicensed ○ when the sum of the 1-g SAR is < 1.6 W/kg for all simultaneous transmitting antennas ○ when SAR to peak location separation ratio of simultaneous transmitting antenna pair is < 0.3 SAR required: Licensed & Unlicensed antenna pairs with SAR to peak location separation ratio ≥ 0.3; test is only required for the configuration that results in the highest SAR in stand-alone configuration for each wireless mode and exposure condition Note: simultaneous transmission exposure conditions for head and body can be different for different style phones; therefore, different test requirements may apply
Unlicensed Transmitters	When there is no simultaneous transmission – ○ output ≤ 60/f: SAR not required ○ output > 60/f: stand-alone SAR required When there is simultaneous transmission – Stand-alone SAR not required when ○ output ≤ 2·P_{Ref} and antenna is ≥ 5.0 cm from other antennas ○ output ≤ P_{Ref} and antenna is ≥ 2.5 cm from other antennas ○ output ≤ P_{Ref} and antenna is < 2.5 cm from other antennas, each with either output power ≤ P_{Ref} or 1-g SAR < 1.2 W/kg Otherwise stand-alone SAR is required When stand-alone SAR is required ○ test SAR on highest output channel for each wireless mode and exposure condition ○ if SAR for highest output channel is > 50% of SAR limit, evaluate all channels according to normal procedures	
Jaw, Mouth and Nose	Flat phantom SAR required ○ when measurement is required in tight regions of SAM and it is not feasible or the results can be questionable due to probe tilt, calibration, positioning and orientation issues ○ position rectangular and clam-shell phones according to flat phantom procedures and conduct SAR measurements for these specific locations	When simultaneous transmission SAR testing is required, contact the FCC Laboratory for interim guidance.

Table. 12.2 SAR Evaluation Requirements for Cellphones with Multiple Transmitters

FCC ID: BEJP690G

Antenna separation distance between Main and BT/ WLAN: 78.4 mm

BT Max. RF output power: 8.99 dBm (7.93 mW)

12.2 Conclusion

Because the conducted output power level of the BT transmitter is less than 2*P_{ref}, and the BT antenna is more than 5 cm from the Main antenna, neither simultaneous SAR nor stand-alone BT SAR are required for the EUT.

Simultaneous Transmission Summation for Held to Ear

Simultaneous TX	configuration	850 GSM SAR(W/kg)	WIFI SAR (W/kg)	∑SAR (W/kg)	Simultaneous TX	configuration	1900 GSM SAR(W/kg)	WIFI SAR (W/kg)	∑SAR (W/kg)
Head SAR	Left Cheek	0.305	0.422	0.727	Head SAR	Left Cheek	0.363	0.422	0.785
	Left Tilt	0.186	0.112	0.298		Left Tilt	0.139	0.112	0.251
	Right Cheek	0.311	0.156	0.467		Right Cheek	0.248	0.156	0.404
	Right Tilt	0.185	0.058	0.243		Right Tilt	0.119	0.058	0.177
Simultaneous TX	configuration	850 WCDMA SAR(W/kg)	WIFI SAR (W/kg)	∑SAR (W/kg)	Simultaneous TX	configuration	1900 WCDMA SAR(W/kg)	WIFI SAR (W/kg)	∑SAR (W/kg)
Head SAR	Left Cheek	0.338	0.422	0.76	Head SAR	Left Cheek	0.764	0.422	1.186
	Left Tilt	0.197	0.112	0.309		Left Tilt	0.301	0.112	0.413
	Right Cheek	0.346	0.156	0.502		Right Cheek	0.534	0.156	0.69
	Right Tilt	0.211	0.058	0.269		Right Tilt	0.259	0.058	0.317

Simultaneous Transmission Summation for Hotspot

Simultaneous TX	configuration	850 GSM SAR(W/kg)	WIFI SAR (W/kg)	∑SAR (W/kg)	Simultaneous TX	configuration	1900 GSM SAR(W/kg)	WIFI SAR (W/kg)	∑SAR (W/kg)
Body SAR	Back	1	0.082	1.082	Body SAR	Back	0.383	0.082	0.465
	Front	0.49	0.056	0.546		Front	0.307	0.056	0.363
	Left	0.367	-	0.367		Left	0.127	-	0.127
	Right	0.419	0.075	0.494		Right	0.109	0.075	0.184
	Bottom	0.067	-	0.067		Bottom	0.254	-	0.254
	Top	-	0.00209	0.00209		Top	-	0.00209	0.00209
Simultaneous TX	configuration	850 WCDMA SAR(W/kg)	WIFI SAR (W/kg)	∑SAR (W/kg)	Simultaneous TX	configuration	1900 WCDMA SAR(W/kg)	WIFI SAR (W/kg)	∑SAR (W/kg)
Body SAR	Back	0.75	0.082	0.832	Body SAR	Back	0.749	0.082	0.831
	Front	0.395	0.056	0.451		Front	0.648	0.056	0.704
	Left	0.312	-	0.312		Left	0.199	-	0.199
	Right	0.343	0.075	0.418		Right	0.17	0.075	0.245
	Bottom	0.051	-	0.051		Bottom	0.438	-	0.438
	Top	-	0.00209	0.00209		Top	-	0.00209	0.00209

13. SAR TEST DATA SUMMARY

13.1 Measurement Results (GSM850 Head SAR)

Frequency		Modulation	Conducted Power (dBm)		Battery	Phantom Position	Antenna Type	SAR(mW/g)
MHz	Channel		Begin	End				
836.6	190 (Mid)	GSM850	32.96	32.87	Standard	Left Ear	Intenna	0.305
836.6	190 (Mid)	GSM850	32.96	32.98	Standard	Left Tilt 15°	Intenna	0.186
836.6	190 (Mid)	GSM850	32.96	32.98	Standard	Right Ear	Intenna	0.311
836.6	190 (Mid)	GSM850	32.96	33.00	Standard	Right Tilt 15°	Intenna	0.185
ANSI/ IEEE C95.1 - 1992– Safety Limit Spatial Peak Uncontrolled Exposure/ General Population						**Head 1.6 W/kg (mW/g)** Averaged over 1 gram		

NOTES:

1 The test data reported are the worst-case SAR value with the antenna-head position set in a typical configuration. Test procedures used are according to FCC/OET Bulletin 65, Supplement C [July 2001].
2 All modes of operation were investigated and the worst-case are reported.
3 Measured Depth of Simulating Tissue is 15.0 cm ± 0.2 cm.
4 Tissue parameters and temperatures are listed on the SAR plot.
5 Battery Type ☒ Standard ☐ Extended ☐ Slim
Batteries are fully charged for all readings.
6 Test Signal Call Mode ☐ Manual Test cord ☒ Base Station Simulator
7 Justification for reduced test configurations: per FCC/OET Supplement C (July, 2001), if the SAR measured at the middle channel for each test configuration (Left, right, cheek/touch, tilt/ear, extended and retracted) is at least 3.0 dB lower than the SAR limit, testing at the high and low channels is optional for such test configuration(s).

13.2 Measurement Results (GSM1900 Head SAR)

Frequency		Modulation	Conducted Power (dBm)		Battery	Phantom Position	Antenna Type	SAR(mW/g)
MHz	Channel		Begin	End				
1 880.0	661 (Mid)	GSM1900	29.80	29.76	Standard	Left Ear	Intenna	0.363
1 880.0	661 (Mid)	GSM1900	29.80	29.84	Standard	Left Tilt 15°	Intenna	0.139
1 880.0	661 (Mid)	GSM1900	29.80	29.71	Standard	Right Ear	Intenna	0.248
1 880.0	661 (Mid)	GSM1900	29.80	29.78	Standard	Right Tilt 15°	Intenna	0.119
ANSI/ IEEE C95.1 - 1992– Safety Limit Spatial Peak Uncontrolled Exposure/ General Population						**Head 1.6 W/kg (mW/g)** Averaged over 1 gram		

NOTES:

1 The test data reported are the worst-case SAR value with the antenna-head position set in a typical configuration. Test procedures used are according to FCC/OET Bulletin 65, Supplement C [July 2001].
2 All modes of operation were investigated and the worst-case are reported.
3 Measured Depth of Simulating Tissue is 15.0 cm ± 0.2 cm.
4 Tissue parameters and temperatures are listed on the SAR plot.
5 Battery Type ☒ Standard ☐ Extended ☐ Slim
Batteries are fully charged for all readings.
6 Test Signal Call Mode ☐ Manual Test cord ☒ Base Station Simulator
7 Justification for reduced test configurations: per FCC/OET Supplement C (July, 2001), if the SAR measured at the middle channel for each test configuration (Left, right, cheek/touch, tilt/ear, extended and retracted) is at least 3.0 dB lower than the SAR limit, testing at the high and low channels is optional for such test configuration(s).

13.3 Measurement Results (WCDMA850 Head SAR)

Frequency		Modulation	Conducted Power (dBm)		Battery	Phantom Position	Antenna Type	SAR(mW/g)
MHz	Channel		Begin	End				
836.6	4183 (Mid)	WCDMA850	22.82	22.94	Standard	Left Ear	Intenna	0.338
836.6	4183 (Mid)	WCDMA850	22.82	22.79	Standard	Left Tilt 15°	Intenna	0.197
836.6	4183 (Mid)	WCDMA850	22.82	22.93	Standard	Right Ear	Intenna	0.346
836.6	4183 (Mid)	WCDMA850	22.82	22.88	Standard	Right Tilt 15°	Intenna	0.211
ANSI/ IEEE C95.1 1992 – Safety Limit Spatial Peak Uncontrolled Exposure/ General Population						**Head 1.6 W/kg (mW/g)** Averaged over 1 gram		

NOTES:

1 The test data reported are the worst-case SAR value with the antenna-head position set in a typical configuration. Test procedures used are according to FCC/OET Bulletin 65, Supplement C [July 2001].
2 All modes of operation were investigated and the worst-case are reported.
3 Measured Depth of Simulating Tissue is 15.0 cm ± 0.2 cm.
4 Tissue parameters and temperatures are listed on the SAR plot.
5 Battery Type ☒ Standard ☐ Extended ☐ Slim
Batteries are fully charged for all readings.
6 Test Signal Call Mode ☐ Manual Test cord ☒ Base Station Simulator
7 Justification for reduced test configurations: per FCC/OET Supplement C (July, 2001), if the SAR measured at the middle channel for each test configuration (Left, right, cheek/touch, tilt/ear, extended and retracted) is at least 3.0 dB lower than the SAR limit, testing at the high and low channels is optional for such test configuration(s).
8 WCDMA Mode was tested under RMC 12.2 kbps and HSDPA Inactive.

13.4 Measurement Results (WCDMA1900 Head SAR)

Frequency		Modulation	Conducted Power (dBm)		Battery	Phantom Position	Antenna Type	SAR(mW/g)
MHz	Channel		Begin	End				
1 880.00	9400 (Mid)	WCDMA1900	22.87	22.90	Standard	Left Ear	Intenna	0.764
1 880.00	9400 (Mid)	WCDMA1900	22.87	22.83	Standard	Left Tilt 15°	Intenna	0.301
1 880.00	9400 (Mid)	WCDMA1900	22.87	22.97	Standard	Right Ear	Intenna	0.534
1 880.00	9400 (Mid)	WCDMA1900	22.87	22.85	Standard	Right Tilt 15°	Intenna	0.259
ANSI/ IEEE C95.1 1992 – Safety Limit Spatial Peak Uncontrolled Exposure/ General Population						**Head 1.6 W/kg (mW/g)** Averaged over 1 gram		

NOTES:

1 The test data reported are the worst-case SAR value with the antenna-head position set in a typical configuration. Test procedures used are according to FCC/OET Bulletin 65, Supplement C [July 2001].
2 All modes of operation were investigated and the worst-case are reported.
3 Measured Depth of Simulating Tissue is 15.0 cm ± 0.2 cm.
4 Tissue parameters and temperatures are listed on the SAR plot.
5 Battery Type ☒ Standard ☐ Extended ☐ Slim
Batteries are fully charged for all readings.
6 Test Signal Call Mode ☐ Manual Test cord ☒ Base Station Simulator
7 Justification for reduced test configurations: per FCC/OET Supplement C (July, 2001), if the SAR measured at the middle channel for each test configuration (Left, right, cheek/touch, tilt/ear, extended and retracted) is at least 3.0 dB lower than the SAR limit, testing at the high and low channels is optional for such test configuration(s).
8 WCDMA Mode was tested under RMC 12.2 kbps and HSDPA Inactive.

13.5 Measurement Results (802.11b/g/n Head)

Frequency		Modulation	Conducted Power (dBm)		Battery	Phantom Position	Antenna Type	SAR(mW/g)
MHz	Channel		Begin	End				
2 462	11 (High)	802.11b	13.89	13.99	Standard	Left Ear	Intenna	0.422
2 462	11 (High)	802.11b	13.89	13.90	Standard	Left Tilt 15°	Intenna	0.112
2 462	11 (High)	802.11b	13.89	13.95	Standard	Right Ear	Intenna	0.156
2 462	11 (High)	802.11b	13.89	13.96	Standard	Right Tilt 15	Intenna	0.058
ANSI/ IEEE C95.1 - 1992– Safety Limit Spatial Peak Uncontrolled Exposure/ General Population						**Head 1.6 W/kg (mW/g)** Averaged over 1 gram		

NOTES:

1 The test data reported are the worst-case SAR value with the antenna-head position set in a typical configuration. Test procedures used are according to FCC/OET Bulletin 65, Supplement C [July 2001].
2 All modes of operation were investigated and the worst-case are reported.
3 Measured Depth of Simulating Tissue is 15.0 cm ± 0.2 cm.
4 Tissue parameters and temperatures are listed on the SAR plot.
5 Battery Type ☒ Standard ☐ Extended ☐ Slim
Batteries are fully charged for all readings.
6 Test Signal Call Mode ☒ Manual Test cord ☐ Base Station Simulator
7 IEEE 802.11g(including 802.11n) SAR testing is required when the conducted powers are equal to or greater than 0.25 dB Than the conducted powers in IEEE 802.11b.

13.6 Measurement Results (GSM850 Hotspot Body SAR)

Frequency		Modulation	Conducted Power (dBm)		Configuration	Separation Distance	SAR(mW/g)
MHz	Channel		Begin	End			
836.6	190 (Mid)	GPRS 4Tx	27.99	28.01	Front	1.0 cm	0.490
824.2	128 (Low)	GPRS 4Tx	28.12	28.01	Back	1.0 cm	0.840
836.6	190 (Mid)	GPRS 4Tx	27.99	28.07	Back	1.0 cm	0.926
848.8	251 (High)	GPRS 4Tx	27.95	27.96	Back	1.0 cm	1
836.6	190 (Mid)	GPRS 4Tx	27.99	27.95	Left	1.0 cm	0.367
836.6	190 (Mid)	GPRS 4Tx	27.99	28.06	Right	1.0 cm	0.419
836.6	190 (Mid)	GPRS 4Tx	27.99	27.96	Bottom	1.0 cm	0.067
ANSI/ IEEE C95.1 - 1992– Safety Limit Spatial Peak Uncontrolled Exposure/ General Population						**Body 1.6 W/kg (mW/g)** Averaged over 1 gram	

NOTES:

1 The test data reported are the worst-case SAR value with the antenna-head position set in a typical configuration. Test procedures used are according to FCC/OET Bulletin 65, Supplement C [July 2001].
2 All modes of operation were investigated and the worst-case are reported.
3 Measured Depth of Simulating Tissue is 15.0 cm ± 0.2 cm.
4 Tissue parameters and temperatures are listed on the SAR plot.
5 Battery Type ☒ Standard ☐ Extended ☐ Slim
Batteries are fully charged for all readings.
6 Test Signal Call Mode ☐ Manual Test cord ☒ Base Station Simulator
7 Test Configuration ☐ With Holster ☒ Without Holster
8 Justification for reduced test configurations: per FCC/OET Supplement C (July, 2001), if the SAR measured at the middle channel for each test configuration (Left, right, cheek/touch, tilt/ear, extended and retracted) is at least 3.0 dB lower than the SAR limit, testing at the high and low channels is optional for such test configuration(s).

13.7 Measurement Results (GSM1900 Hotspot Body SAR)

Frequency		Modulation	Conducted Power (dBm)		Configuration	Separation Distance	SAR(mW/g)
MHz	Channel		Begin	End			
1 880.0	661 (Mid)	GPRS 4Tx	24.86	24.89	Front	1.0 cm	0.307
1 880.0	661 (Mid)	GPRS 4Tx	24.86	24.89	Back	1.0 cm	0.383
1 880.0	661 (Mid)	GPRS 4Tx	24.86	24.85	Left	1.0 cm	0.127
1 880.0	661 (Mid)	GPRS 4Tx	24.86	25.00	Right	1.0 cm	0.109
1 880.0	661 (Mid)	GPRS 4Tx	24.86	24.87	Bottom	1.0 cm	0.254
ANSI/ IEEE C95.1 - 1992– Safety Limit Spatial Peak Uncontrolled Exposure/ General Population						**Body 1.6 W/kg (mW/g)** Averaged over 1 gram	

NOTES:

1 The test data reported are the worst-case SAR value with the antenna-head position set in a typical configuration. Test procedures used are according to FCC/OET Bulletin 65, Supplement C [July 2001].
2 All modes of operation were investigated and the worst-case are reported.
3 Measured Depth of Simulating Tissue is 15.0 cm ± 0.2 cm.
4 Tissue parameters and temperatures are listed on the SAR plot.
5 Battery Type ☒ Standard ☐ Extended ☐ Slim
Batteries are fully charged for all readings.
6 Test Signal Call Mode ☐ Manual Test cord ☒ Base Station Simulator
7 Test Configuration ☐ With Holster ☒ Without Holster
8 Justification for reduced test configurations: per FCC/OET Supplement C (July, 2001), if the SAR measured at the middle channel for each test configuration (Left, right, cheek/touch, tilt/ear, extended and retracted) is at least 3.0 dB lower than the SAR limit, testing at the high and low channels is optional for such test configuration(s).

13.8 Measurement Results (WCDMA850 Hotspot Body SAR)

Frequency		Modulation	Conducted Power (dBm)		Configuration	Separation Distance	SAR(mW/g)
MHz	Channel		Begin	End			
836.6	4183 (Mid)	WCDMA850	22.82	22.79	Front	1.0 cm	0.395
836.6	4183 (Mid)	WCDMA850	22.82	22.85	Back	1.0 cm	0.750
836.6	4183 (Mid)	WCDMA850	22.82	22.84	Left	1.0 cm	0.312
836.6	4183 (Mid)	WCDMA850	22.82	22.82	Right	1.0 cm	0.343
836.6	4183 (Mid)	WCDMA850	22.82	22.76	Bottom	1.0 cm	0.051
ANSI/ IEEE C95.1 - 1992– Safety Limit Spatial Peak Uncontrolled Exposure/ General Population						**Body 1.6 W/kg (mW/g)** Averaged over 1 gram	

NOTES:

1 The test data reported are the worst-case SAR value with the antenna-head position set in a typical configuration. Test procedures used are according to FCC/OET Bulletin 65, Supplement C [July 2001].
2 All modes of operation were investigated and the worst-case are reported.
3 Measured Depth of Simulating Tissue is 15.0 cm ± 0.2 cm.
4 Tissue parameters and temperatures are listed on the SAR plot.
5 Battery Type ☒ Standard ☐ Extended ☐ Slim
Batteries are fully charged for all readings.
6 Test Signal Call Mode ☐ Manual Test cord ☒ Base Station Simulator
7 Test Configuration ☐ With Holster ☒ Without Holster
8 Justification for reduced test configurations: per FCC/OET Supplement C (July, 2001), if the SAR measured at the middle channel for each test configuration (Left, right, cheek/touch, tilt/ear, extended and retracted) is at least 3.0 dB lower than the SAR limit, testing at the high and low channels is optional for such test configuration(s).
9 WCDMA Mode was tested under RMC 12.2 kbps and HSPA Inactive.

13.9 Measurement Results (WCDMA1900 Hotspot Body SAR)

Frequency		Modulation	Conducted Power (dBm)		Configuration	Separation Distance	SAR(mW/g)
MHz	Channel		Begin	End			
1 880.00	9400 (Mid)	WCDMA1900	22.87	22.86	Front	1.0 cm	0.648
1 880.0	9400 (Mid)	WCDMA1900	22.87	22.70	Back	1.0 cm	0.749
1 880.00	9400 (Mid)	WCDMA1900	22.87	22.88	Left	1.0 cm	0.199
1 880.00	9400 (Mid)	WCDMA1900	22.87	22.85	Right	1.0 cm	0.170
1 880.00	9400 (Mid)	WCDMA1900	22.87	22.81	Bottom	1.0 cm	0.438
ANSI/ IEEE C95.1 - 1992– Safety Limit Spatial Peak Uncontrolled Exposure/ General Population						**Body 1.6 W/kg (mW/g)** Averaged over 1 gram	

NOTES:

1 The test data reported are the worst-case SAR value with the antenna-head position set in a typical configuration. Test procedures used are according to FCC/OET Bulletin 65, Supplement C [July 2001].
2 All modes of operation were investigated and the worst-case are reported.
3 Measured Depth of Simulating Tissue is 15.0 cm ± 0.2 cm.
4 Tissue parameters and temperatures are listed on the SAR plot.
5 Battery Type ☒ Standard ☐ Extended ☐ Slim
Batteries are fully charged for all readings.
6 Test Signal Call Mode ☐ Manual Test cord ☒ Base Station Simulator
7 Test Configuration ☐ With Holster ☒ Without Holster
8 Justification for reduced test configurations: per FCC/OET Supplement C (July, 2001), if the SAR measured at the middle channel for each test configuration (Left, right, cheek/touch, tilt/ear, extended and retracted) is at least 3.0 dB lower than the SAR limit, testing at the high and low channels is optional for such test configuration(s).
9 WCDMA Mode was tested under RMC 12.2 kbps and HSPA Inactive.

13.10 Measurement Results (802.11b/g/n Hotspot Body SAR)

Frequency		Modulation	Conducted Power (dBm)		Configuration	Separation Distance	Data Rate	SAR(mW/g)
MHz	Channel		Begin	End				
2 462	11 (High)	802.11b	15.2	15.14	Front	1.0 cm	1 Mbps	0.056
2 462	11 (High)	802.11b	15.2	15.28	Back	1.0 cm	1 Mbps	0.082
2 462	11 (High)	802.11b	15.2	15.10	Right	1.0 cm	1 Mbps	0.075
2 462	11 (High)	802.11b	15.2	15.29	Top	1.0 cm	1 Mbps	0.00209
ANSI/ IEEE C95.1 1992 – Safety Limit Spatial Peak Uncontrolled Exposure/ General Population						**Body 1.6 W/kg (mW/g)** Averaged over 1 gram		

NOTES:

1 The test data reported are the worst-case SAR value with the antenna-head position set in a typical configuration. Test procedures used are according to FCC/OET Bulletin 65, Supplement C [July 2001].
2 All modes of operation were investigated and the worst-case are reported.
3 Measured Depth of Simulating Tissue is 15.0 cm ± 0.2 cm.
4 Tissue parameters and temperatures are listed on the SAR plot.
5 Battery Type ☒ Standard ☐ Extended ☐ Slim
Batteries are fully charged for all readings.
6 Test Signal Call Mode ☒ Manual Test code ☐ Base Station Simulator
7 IEEE 802.11g(including 802.11n) SAR testing is required when the conducted powers are equal to or greater than 0.25 dB Than the conducted powers in IEEE 802.11b.

14. CONCLUSION

The SAR measurement indicates that the EUT complies with the RF radiation exposure limits of the ANSI/ IEEE C95.1 1992.

These measurements are taken to simulate the RF effects exposure under worst-case conditions. Precise laboratory measures were taken to assure repeatability of the tests.

15. REFERENCES

[1] Federal Communications Commission, OET Bulletin 65 (Edition 97-01), Supplement C (Edition 01-01), Evaluating Compliance with FCC Guidelines for Human Exposure to Radio frequency Electromagnetic Fields, July 2001.

[2] IEEE Standards Coordinating Committee 34 – IEEE Std. 1528-2003, IEE Recommended Practice or Determining the Peak Spatial-Average Specific Absorption Rate (SAR) in the Human Body from Wireless Communications Devices.

[3] Federal Communications Commission, ET Docket 93-62, Guidelines for Evaluating the Environmental Effects of Radio frequency Radiation, Aug. 1996.

[4] ANSI/IEEE C95.1 - 1991, American National Standard safety levels with respect to human exposure to radio frequency electromagnetic fields, 300 kHz to 100 GHz, New York: IEEE, Aug. 1992

[5] ANSI/IEEE C95.3 - 1991, IEEE Recommended Practice for the Measurement of Potentially Hazardous Electromagnetic Fields - RF and Microwave, New York: IEEE, 1992.

[6] NCRP, National Council on Radiation Protection and Measurements, Biological Effects and Exposure Criteria for Radio Frequency Electromagnetic Fields, NCRP Report No. 86, 1986. Reprinted Feb. 1995.

[7] T. Schmid, O. Egger, N. Kuster, Automated E-field scanning system for dosimetric assessments, IEEE Transaction on Microwave Theory and Techniques, vol. 44, Jan. 1996, pp. 105-113.

[8] K. Pokovic, T. Schmid, N. Kuster, Robust setup for precise calibration of E-field probes in tissue simulating liquids at mobile communications frequencies, ICECOM97, Oct. 1997, pp. 120-124.

[9]K. Pokoviº, T. Schmid, and N. Kuster, E-field Probe with improved isotropy in brain simulating liquids, Proceedings of the ELMAR, Zadar, Croatia, June 23-25, 1996, pp. 172-175.

[10] Schmid & Partner Engineering AG, Application Note: Data Storage and Evaluation, June 1998, p2.

[11] V. Hombach, K. Meier, M. Burkhardt, E. Kuhn, N. Kuster, The Dependence of EM Energy Absorption upon Human Head Modeling at 900 MHz, IEEE Transaction on Microwave Theory and Techniques, vol. 44 no. 10, Oct. 1996, pp. 1865-1873.

[12] N. Kuster and Q. Balzano, Energy absorption mechanism by biological bodies in the near field of dipole antennas above 300 MHz, IEEE Transaction on Vehicular Technology, vol. 41, no. 1, Feb. 1992, pp. 17-23.

[13] G. Hartsgrove, A. Kraszewski, A. Surowiec, Simulated Biological Materials for Electromagnetic Radiation Absorption Studies, University of Ottawa, Bioelectro magnetics, Canada: 1987, pp. 29-36.

[14] Q. Balzano, O. Garay, T. Manning Jr., Electromagnetic Energy Exposure of Simulated Users of Portable Cellular Telephones, IEEE Transactions on Vehicular Technology, vol. 44, no.3, Aug. 1995.

[15] W. Gander, Computer mathematick, Birkhaeuser, Basel, 1992.

[16] W.H. Press, S.A. Teukolsky, W.T. Vetterling, and B.P. Flannery, Numerical Recepies in C, The Art of Scientific Computing, Second edition, Cambridge University Press, 1992.

[17] Federal Communications Commission, OET Bulletin 65, Evaluating Compliance with FCC Guidelines for Human Exposure to Radiofrequency Electromagnetic Fields. Supplement C, Dec. 1997.

[18] N. Kuster, R. Kastle, T. Schmid, Dosimetric evaluation of mobile communications equipment with known precision, IEEE Transaction on Communications, vol. E80-B, no. 5, May 1997, pp. 645-652.

[19] CENELEC CLC/SC111B, European Prestandard (prENV 50166-2), Human Exposure to Electromagnetic Fields High-frequency: 10 kHz-300 GHz, Jan. 1995.

[20] Prof. Dr. Niels Kuster, ETH, EidgenØssische Technische Hoschschule Zòrich, Dosimetric Evaluation of the Cellular Phone.

[21] SAR Evaluation of Handsets with Multiple Transmitters and Antennas #648474.

[22] SAR Measurement Procedure for 802.11 a/b/g Transmitters #KDB 248227.

Attachment 1. – SAR Test Plots

Test Laboratory:	HCT CO., LTD
EUT Type:	Cellular/PCS GSM/GPRS/EDGE/HSDPA Phone with Bluetooth and WLAN
Liquid Temperature:	21.2 ℃
Ambient Temperature:	21.4 ℃
Test Date:	June 13, 2011

DUT: LG-P690g; Type: bar; Serial: #1

Communication System: GSM 850; Frequency: 836.6 MHz;Duty Cycle: 1:8.3
Medium parameters used (interpolated): f = 836.6 MHz; σ = 0.858 mho/m; ε_r = 41.8; ρ = 1000 kg/m^3
Phantom section: Left Section ; Measurement SW: DASY4, V4.7 Build 71; Postprocessing SW: SEMCAD, V1.8 Build 184

DASY4 Configuration:
- Probe: ES3DV3 - SN3161; ConvF(5.84, 5.84, 5.84); Calibrated: 2011-03-17
- Sensor-Surface: 4mm (Mechanical Surface Detection)
- Electronics: DAE3 Sn446; Calibrated: 2010-09-21
- Phantom: SAM 835/900 MHz; Type: SAM

Left touch 190/Area Scan (51x81x1): Measurement grid: dx=15mm, dy=15mm

Info: Interpolated medium parameters used for SAR evaluation.
Maximum value of SAR (interpolated) = 0.328 mW/g

Left touch 190/Zoom Scan (5x5x7)/Cube 0: Measurement grid: dx=8mm, dy=8mm, dz=5mm
Reference Value = 5.47 V/m; Power Drift = -0.093 dB
Peak SAR (extrapolated) = 0.446 W/kg
SAR(1 g) = 0.305 mW/g; SAR(10 g) = 0.205 mW/g

Info: Interpolated medium parameters used for SAR evaluation.
Maximum value of SAR (measured) = 0.323 mW/g

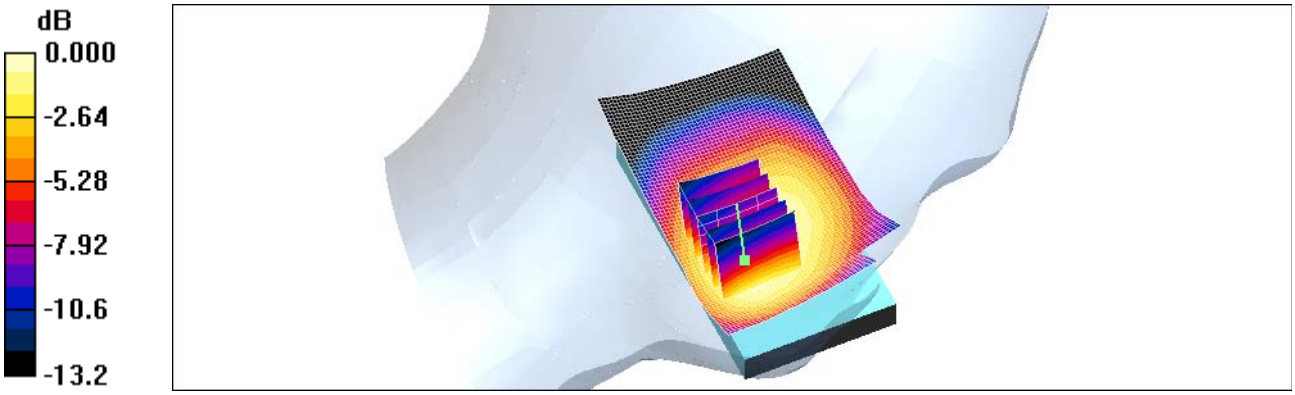

0 dB = 0.323mW/g

Test Laboratory:	HCT CO., LTD
EUT Type:	Cellular/PCS GSM/GPRS/EDGE/HSDPA Phone with Bluetooth and WLAN
Liquid Temperature:	21.2 ℃
Ambient Temperature:	21.4 ℃
Test Date:	June 13, 2011

DUT: LG-P690g; Type: bar; Serial: #1

Communication System: GSM 850; Frequency: 836.6 MHz;Duty Cycle: 1:8.3
Medium parameters used (interpolated): f = 836.6 MHz; σ = 0.858 mho/m; ε_r = 41.8; ρ = 1000 kg/m^3
Phantom section: Left Section ; Measurement SW: DASY4, V4.7 Build 71; Postprocessing SW: SEMCAD, V1.8 Build 184

DASY4 Configuration:
- Probe: ES3DV3 - SN3161; ConvF(5.84, 5.84, 5.84); Calibrated: 2011-03-17
- Sensor-Surface: 4mm (Mechanical Surface Detection)
- Electronics: DAE3 Sn446; Calibrated: 2010-09-21
- Phantom: SAM 835/900 MHz; Type: SAM

Left tilt 190/Area Scan (51x81x1): Measurement grid: dx=15mm, dy=15mm

Info: Interpolated medium parameters used for SAR evaluation.
Maximum value of SAR (interpolated) = 0.197 mW/g

Left tilt 190/Zoom Scan (5x5x7)/Cube 0: Measurement grid: dx=8mm, dy=8mm, dz=5mm
Reference Value = 8.29 V/m; Power Drift = 0.015 dB
Peak SAR (extrapolated) = 0.253 W/kg
SAR(1 g) = 0.186 mW/g; SAR(10 g) = 0.131 mW/g

Info: Interpolated medium parameters used for SAR evaluation.
Maximum value of SAR (measured) = 0.195 mW/g

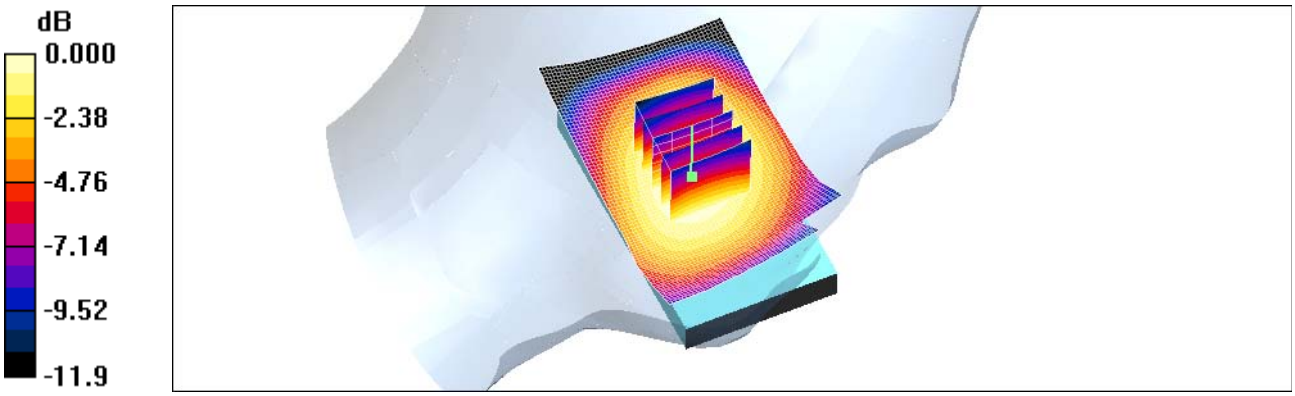

0 dB = 0.195mW/g

Test Laboratory:	HCT CO., LTD
EUT Type:	Cellular/PCS GSM/GPRS/EDGE/HSDPA Phone with Bluetooth and WLAN
Liquid Temperature:	21.2 ℃
Ambient Temperature:	21.4 ℃
Test Date:	June 13, 2011

DUT: LG-P690g; Type: bar; Serial: #1

Communication System: GSM 850; Frequency: 836.6 MHz;Duty Cycle: 1:8.3
Medium parameters used (interpolated): f = 836.6 MHz; σ = 0.858 mho/m; ε_r = 41.8; ρ = 1000 kg/m^3
Phantom section: Right Section ; Measurement SW: DASY4, V4.7 Build 71; Postprocessing SW: SEMCAD, V1.8 Build 184

DASY4 Configuration:
- Probe: ES3DV3 - SN3161; ConvF(5.84, 5.84, 5.84); Calibrated: 2011-03-17
- Sensor-Surface: 4mm (Mechanical Surface Detection)
- Electronics: DAE3 Sn446; Calibrated: 2010-09-21
- Phantom: SAM 835/900 MHz; Type: SAM

Right touch 190/Area Scan (51x81x1): Measurement grid: dx=15mm, dy=15mm

Info: Interpolated medium parameters used for SAR evaluation.
Maximum value of SAR (interpolated) = 0.331 mW/g

Right touch 190/Zoom Scan (5x5x7)/Cube 0: Measurement grid: dx=8mm, dy=8mm, dz=5mm
Reference Value = 4.69 V/m; Power Drift = 0.014 dB
Peak SAR (extrapolated) = 0.415 W/kg
SAR(1 g) = 0.311 mW/g; SAR(10 g) = 0.217 mW/g

Info: Interpolated medium parameters used for SAR evaluation.
Maximum value of SAR (measured) = 0.332 mW/g

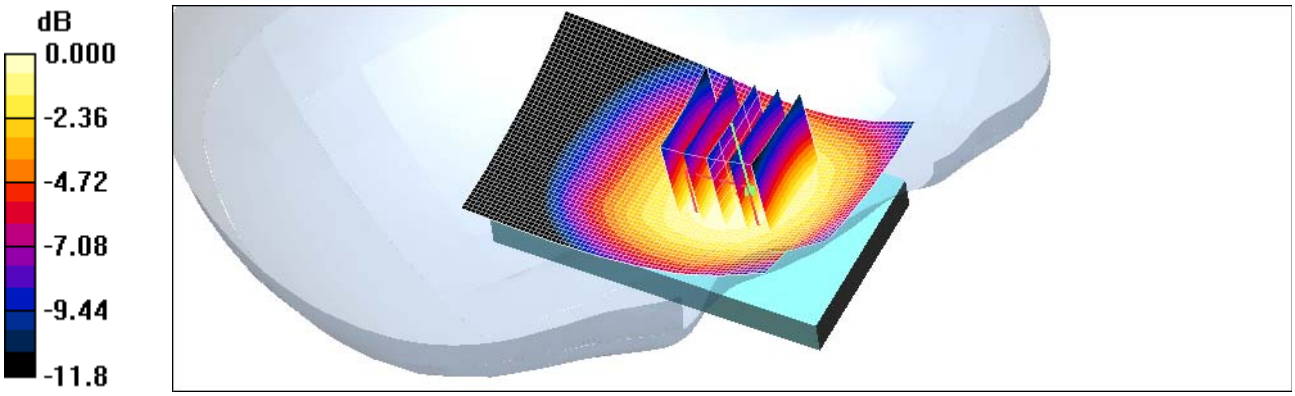

0 dB = 0.332mW/g

Test Laboratory:	HCT CO., LTD
EUT Type:	Cellular/PCS GSM/GPRS/EDGE/HSDPA Phone with Bluetooth and WLAN
Liquid Temperature:	21.2 ℃
Ambient Temperature:	21.4 ℃
Test Date:	June 13, 2011

DUT: LG-P690g; Type: bar; Serial: #1

Communication System: GSM 850; Frequency: 836.6 MHz;Duty Cycle: 1:8.3
Medium parameters used (interpolated): f = 836.6 MHz; σ = 0.858 mho/m; ε_r = 41.8; ρ = 1000 kg/m^3
Phantom section: Right Section ; Measurement SW: DASY4, V4.7 Build 71; Postprocessing SW: SEMCAD, V1.8 Build 184

DASY4 Configuration:
- Probe: ES3DV3 - SN3161; ConvF(5.84, 5.84, 5.84); Calibrated: 2011-03-17
- Sensor-Surface: 4mm (Mechanical Surface Detection)
- Electronics: DAE3 Sn446; Calibrated: 2010-09-21
- Phantom: SAM 835/900 MHz; Type: SAM

Right tilt 190/Area Scan (51x81x1): Measurement grid: dx=15mm, dy=15mm

Info: Interpolated medium parameters used for SAR evaluation.
Maximum value of SAR (interpolated) = 0.193 mW/g

Right tilt 190/Zoom Scan (5x5x7)/Cube 0: Measurement grid: dx=8mm, dy=8mm, dz=5mm
Reference Value = 7.58 V/m; Power Drift = 0.040 dB
Peak SAR (extrapolated) = 0.250 W/kg
SAR(1 g) = 0.185 mW/g; SAR(10 g) = 0.130 mW/g

Info: Interpolated medium parameters used for SAR evaluation.
Maximum value of SAR (measured) = 0.195 mW/g

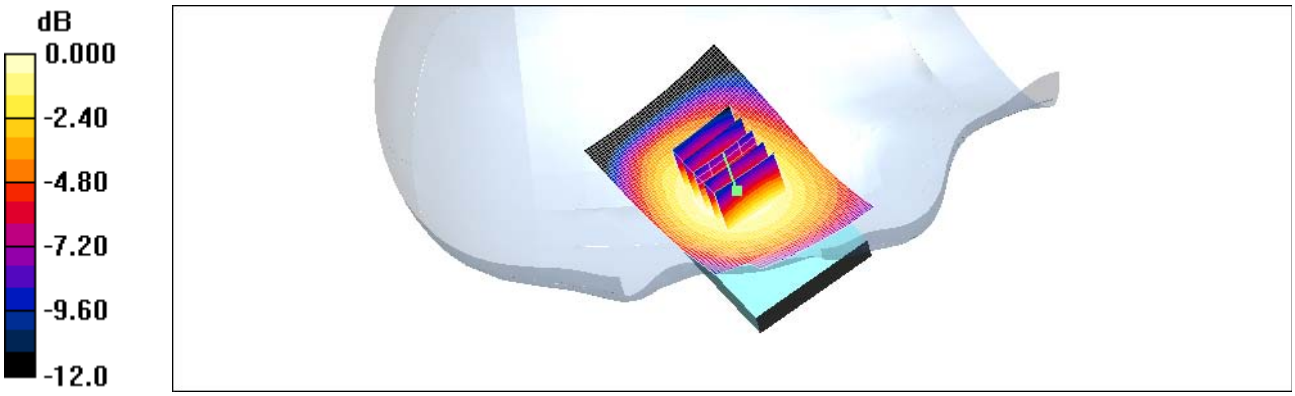

0 dB = 0.195mW/g

Test Laboratory: HCT CO., LTD
EUT Type: Cellular/PCS GSM/GPRS/EDGE/HSDPA Phone with Bluetooth and WLAN
Liquid Temperature: 21.1 ℃
Ambient Temperature: 21.3 ℃
Test Date: June 14, 2011

DUT: LG-P690g; Type: bar; Serial: #1

Communication System: GSM 1900; Frequency: 1880 MHz;Duty Cycle: 1:8.3
Medium parameters used: f = 1880 MHz; σ = 1.39 mho/m; ε_r = 39.1; ρ = 1000 kg/m^3
Phantom section: Left Section ; Measurement SW: DASY4, V4.7 Build 71; Postprocessing SW: SEMCAD, V1.8 Build 184

DASY4 Configuration:
- Probe: ES3DV3 - SN3161; ConvF(4.91, 4.91, 4.91); Calibrated: 2011-03-17
- Sensor-Surface: 4mm (Mechanical Surface Detection)
- Electronics: DAE3 Sn446; Calibrated: 2010-09-21
- Phantom: SAM 1800/1900 MHz; Type: SAM

Left touch 661/Area Scan (51x81x1): Measurement grid: dx=15mm, dy=15mm
Maximum value of SAR (interpolated) = 0.385 mW/g

Left touch 661/Zoom Scan (5x5x7)/Cube 0: Measurement grid: dx=8mm, dy=8mm, dz=5mm
Reference Value = 5.68 V/m; Power Drift = -0.042 dB
Peak SAR (extrapolated) = 0.635 W/kg
SAR(1 g) = 0.363 mW/g; SAR(10 g) = 0.196 mW/g
Maximum value of SAR (measured) = 0.400 mW/g

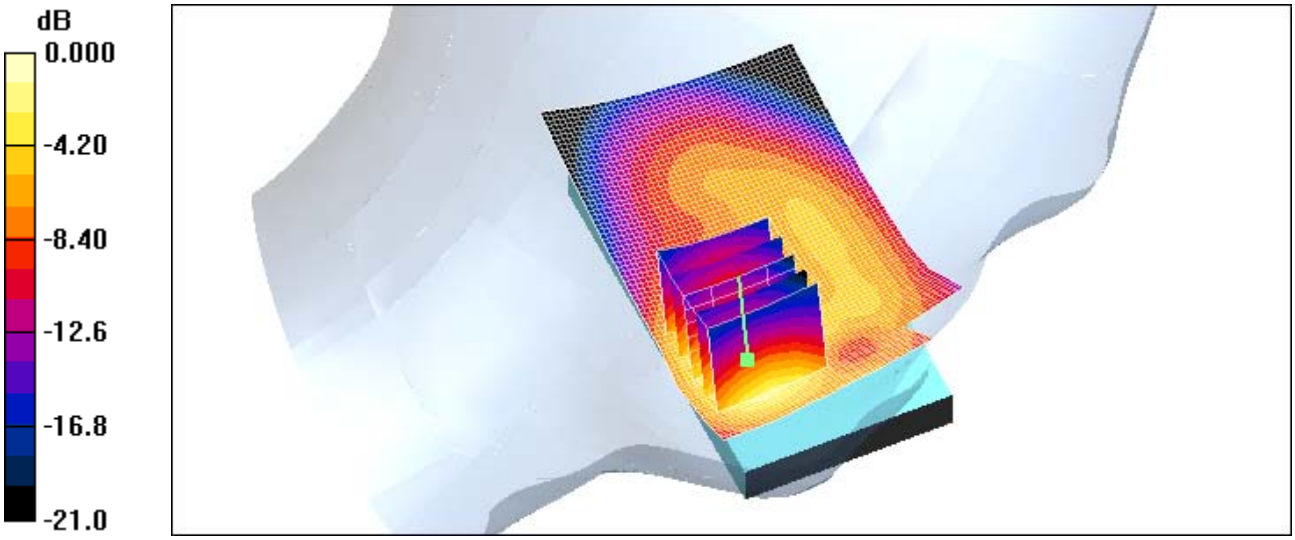

0 dB = 0.400mW/g

Test Laboratory: HCT CO., LTD
EUT Type: Cellular/PCS GSM/GPRS/EDGE/HSDPA Phone with Bluetooth and WLAN
Liquid Temperature: 21.1 ℃
Ambient Temperature: 21.3 ℃
Test Date: June 14, 2011

DUT: LG-P690g; Type: bar; Serial: #1

Communication System: GSM 1900; Frequency: 1880 MHz;Duty Cycle: 1:8.3
Medium parameters used: f = 1880 MHz; σ = 1.39 mho/m; ε_r = 39.1; ρ = 1000 kg/m^3
Phantom section: Left Section ; Measurement SW: DASY4, V4.7 Build 71; Postprocessing SW: SEMCAD, V1.8 Build 184

DASY4 Configuration:
- Probe: ES3DV3 - SN3161; ConvF(4.91, 4.91, 4.91); Calibrated: 2011-03-17
- Sensor-Surface: 4mm (Mechanical Surface Detection)
- Electronics: DAE3 Sn446; Calibrated: 2010-09-21
- Phantom: SAM 1800/1900 MHz; Type: SAM

Left tilt 661/Area Scan (51x81x1): Measurement grid: dx=15mm, dy=15mm
Maximum value of SAR (interpolated) = 0.159 mW/g

Left tilt 661/Zoom Scan (5x5x7)/Cube 0: Measurement grid: dx=8mm, dy=8mm, dz=5mm
Reference Value = 8.94 V/m; Power Drift = 0.042 dB
Peak SAR (extrapolated) = 0.234 W/kg
SAR(1 g) = 0.139 mW/g; SAR(10 g) = 0.080 mW/g
Maximum value of SAR (measured) = 0.149 mW/g

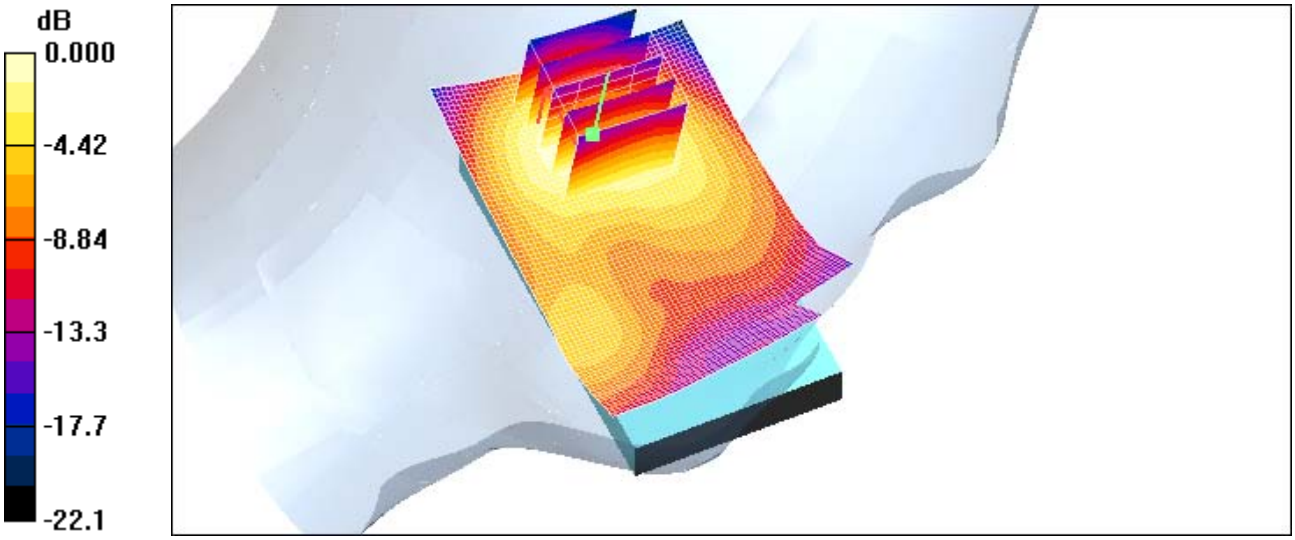

0 dB = 0.149mW/g

Test Laboratory: HCT CO., LTD
EUT Type: Cellular/PCS GSM/GPRS/EDGE/HSDPA Phone with Bluetooth and WLAN
Liquid Temperature: 21.1 ℃
Ambient Temperature: 21.3 ℃
Test Date: June 14, 2011

DUT: LG-P690g; Type: bar; Serial: #1

Communication System: GSM 1900; Frequency: 1880 MHz;Duty Cycle: 1:8.3
Medium parameters used: f = 1880 MHz; σ = 1.39 mho/m; ε_r = 39.1; ρ = 1000 kg/m^3
Phantom section: Right Section ; Measurement SW: DASY4, V4.7 Build 71; Postprocessing SW: SEMCAD, V1.8 Build 184

DASY4 Configuration:
- Probe: ES3DV3 - SN3161; ConvF(4.91, 4.91, 4.91); Calibrated: 2011-03-17
- Sensor-Surface: 4mm (Mechanical Surface Detection)
- Electronics: DAE3 Sn446; Calibrated: 2010-09-21
- Phantom: SAM 1800/1900 MHz; Type: SAM

Right touch 661/Area Scan (51x81x1): Measurement grid: dx=15mm, dy=15mm
Maximum value of SAR (interpolated) = 0.295 mW/g

Right touch 661/Zoom Scan (5x5x7)/Cube 0: Measurement grid: dx=8mm, dy=8mm, dz=5mm
Reference Value = 5.67 V/m; Power Drift = -0.086 dB
Peak SAR (extrapolated) = 0.419 W/kg
SAR(1 g) = 0.248 mW/g; SAR(10 g) = 0.142 mW/g
Maximum value of SAR (measured) = 0.272 mW/g

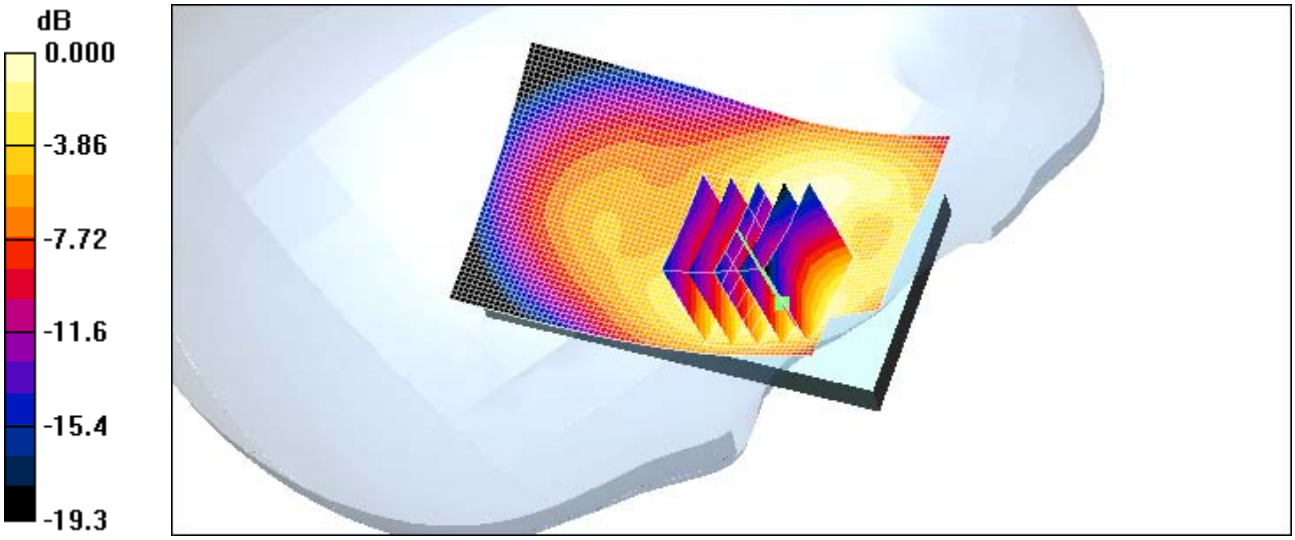

0 dB = 0.272mW/g

Test Laboratory:	HCT CO., LTD
EUT Type:	Cellular/PCS GSM/GPRS/EDGE/HSDPA Phone with Bluetooth and WLAN
Liquid Temperature:	21.1 ℃
Ambient Temperature:	21.3 ℃
Test Date:	June 14, 2011

DUT: LG-P690g; Type: bar; Serial: #1

Communication System: GSM 1900; Frequency: 1880 MHz;Duty Cycle: 1:8.3
Medium parameters used: f = 1880 MHz; σ = 1.39 mho/m; ε_r = 39.1; ρ = 1000 kg/m^3
Phantom section: Right Section ; Measurement SW: DASY4, V4.7 Build 71; Postprocessing SW: SEMCAD, V1.8 Build 184

DASY4 Configuration:
- Probe: ES3DV3 - SN3161; ConvF(4.91, 4.91, 4.91); Calibrated: 2011-03-17
- Sensor-Surface: 4mm (Mechanical Surface Detection)
- Electronics: DAE3 Sn446; Calibrated: 2010-09-21
- Phantom: SAM 1800/1900 MHz; Type: SAM

Right tilt 661/Area Scan (51x81x1): Measurement grid: dx=15mm, dy=15mm
Maximum value of SAR (interpolated) = 0.133 mW/g

Right tilt 661/Zoom Scan (5x5x7)/Cube 0: Measurement grid: dx=8mm, dy=8mm, dz=5mm
Reference Value = 8.55 V/m; Power Drift = -0.020 dB
Peak SAR (extrapolated) = 0.201 W/kg
SAR(1 g) = 0.119 mW/g; SAR(10 g) = 0.068 mW/g
Maximum value of SAR (measured) = 0.132 mW/g

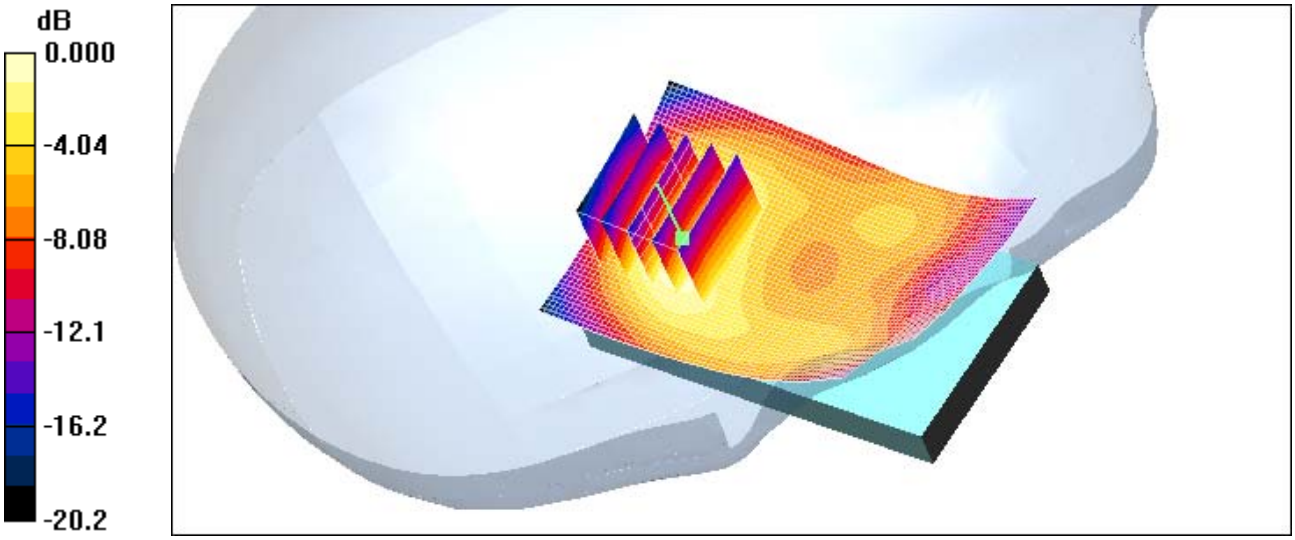

0 dB = 0.132mW/g

Test Laboratory:	HCT CO., LTD
EUT Type:	Cellular/PCS GSM/GPRS/EDGE/HSDPA Phone with Bluetooth and WLAN
Liquid Temperature:	21.2 ℃
Ambient Temperature:	21.4 ℃
Test Date:	June 13, 2011

DUT: LG-P690g; Type: bar; Serial: #1

Communication System: WCDMA850; Frequency: 836.6 MHz;Duty Cycle: 1:1
Medium parameters used (interpolated): f = 836.6 MHz; σ = 0.858 mho/m; ε_r = 41.8; ρ = 1000 kg/m^3
Phantom section: Left Section ; Measurement SW: DASY4, V4.7 Build 71; Postprocessing SW: SEMCAD, V1.8 Build 184

DASY4 Configuration:
- Probe: ES3DV3 - SN3161; ConvF(5.84, 5.84, 5.84); Calibrated: 2011-03-17
- Sensor-Surface: 4mm (Mechanical Surface Detection)
- Electronics: DAE3 Sn446; Calibrated: 2010-09-21
- Phantom: SAM 835/900 MHz; Type: SAM

Left touch 4183/Area Scan (51x81x1): Measurement grid: dx=15mm, dy=15mm

Info: Interpolated medium parameters used for SAR evaluation.
Maximum value of SAR (interpolated) = 0.369 mW/g

Left touch 4183/Zoom Scan (5x5x7)/Cube 0: Measurement grid: dx=8mm, dy=8mm, dz=5mm
Reference Value = 4.94 V/m; Power Drift = 0.124 dB
Peak SAR (extrapolated) = 0.493 W/kg
SAR(1 g) = 0.338 mW/g; SAR(10 g) = 0.227 mW/g

Info: Interpolated medium parameters used for SAR evaluation.
Maximum value of SAR (measured) = 0.357 mW/g

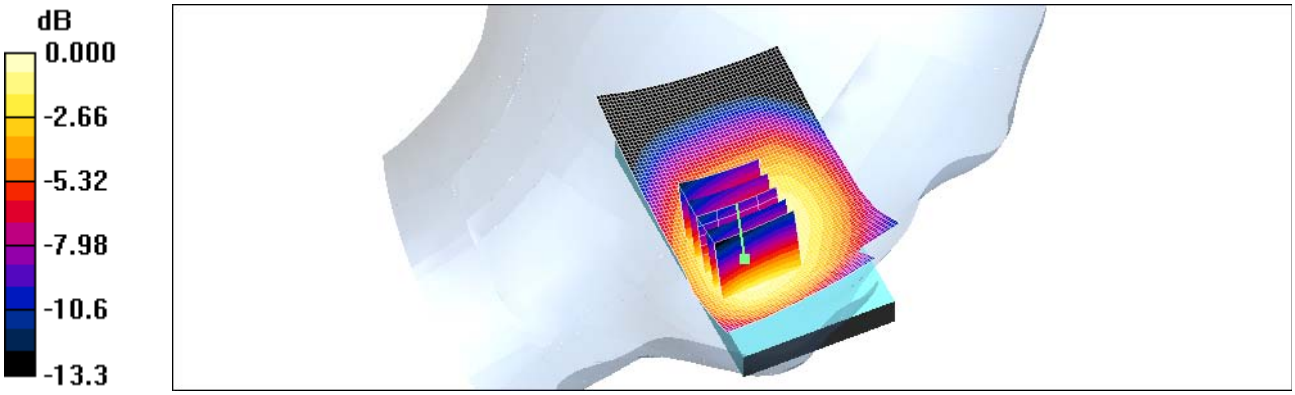

0 dB = 0.357mW/g

Test Laboratory:	HCT CO., LTD
EUT Type:	Cellular/PCS GSM/GPRS/EDGE/HSDPA Phone with Bluetooth and WLAN
Liquid Temperature:	21.2 ℃
Ambient Temperature:	21.4 ℃
Test Date:	June 13, 2011

DUT: LG-P690g; Type: bar; Serial: #1

Communication System: WCDMA850; Frequency: 836.6 MHz;Duty Cycle: 1:1
Medium parameters used (interpolated): f = 836.6 MHz; σ = 0.858 mho/m; ε_r = 41.8; ρ = 1000 kg/m^3
Phantom section: Left Section ; Measurement SW: DASY4, V4.7 Build 71; Postprocessing SW: SEMCAD, V1.8 Build 184

DASY4 Configuration:
- Probe: ES3DV3 - SN3161; ConvF(5.84, 5.84, 5.84); Calibrated: 2011-03-17
- Sensor-Surface: 4mm (Mechanical Surface Detection)
- Electronics: DAE3 Sn446; Calibrated: 2010-09-21
- Phantom: SAM 835/900 MHz; Type: SAM

Left tilt 4183/Area Scan (51x81x1): Measurement grid: dx=15mm, dy=15mm

Info: Interpolated medium parameters used for SAR evaluation.
Maximum value of SAR (interpolated) = 0.212 mW/g

Left tilt 4183/Zoom Scan (5x5x7)/Cube 0: Measurement grid: dx=8mm, dy=8mm, dz=5mm
Reference Value = 8.65 V/m; Power Drift = -0.033 dB
Peak SAR (extrapolated) = 0.264 W/kg
SAR(1 g) = 0.197 mW/g; SAR(10 g) = 0.138 mW/g

Info: Interpolated medium parameters used for SAR evaluation.
Maximum value of SAR (measured) = 0.208 mW/g

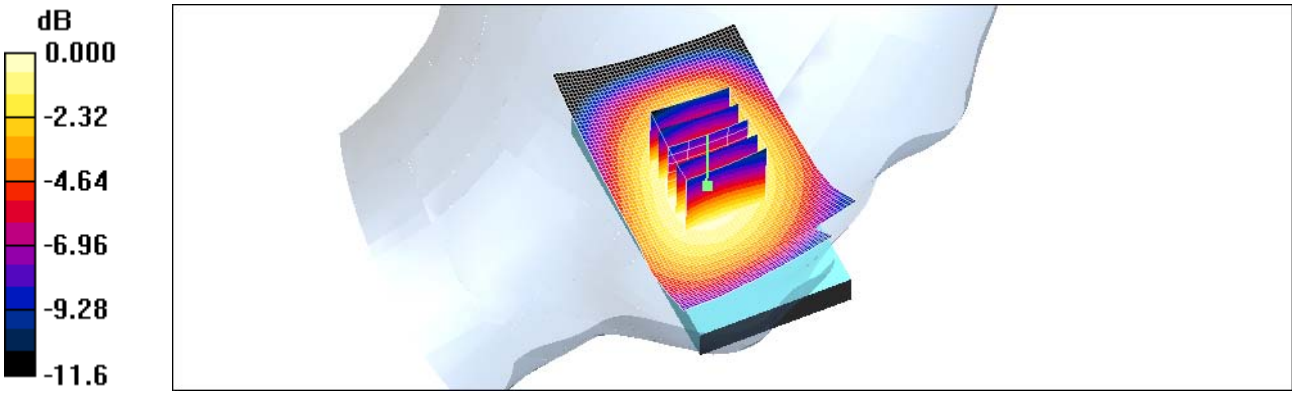

0 dB = 0.208mW/g

Test Laboratory:	HCT CO., LTD
EUT Type:	Cellular/PCS GSM/GPRS/EDGE/HSDPA Phone with Bluetooth and WLAN
Liquid Temperature:	21.2 ℃
Ambient Temperature:	21.4 ℃
Test Date:	June 13, 2011

DUT: LG-P690g; Type: bar; Serial: #1

Communication System: WCDMA850; Frequency: 836.6 MHz;Duty Cycle: 1:1
Medium parameters used (interpolated): f = 836.6 MHz; σ = 0.858 mho/m; ε_r = 41.8; ρ = 1000 kg/m^3
Phantom section: Right Section ; Measurement SW: DASY4, V4.7 Build 71; Postprocessing SW: SEMCAD, V1.8 Build 184

DASY4 Configuration:
- Probe: ES3DV3 - SN3161; ConvF(5.84, 5.84, 5.84); Calibrated: 2011-03-17
- Sensor-Surface: 4mm (Mechanical Surface Detection)
- Electronics: DAE3 Sn446; Calibrated: 2010-09-21
- Phantom: SAM 835/900 MHz; Type: SAM

Right touch 4183/Area Scan (51x81x1): Measurement grid: dx=15mm, dy=15mm

Info: Interpolated medium parameters used for SAR evaluation.
Maximum value of SAR (interpolated) = 0.367 mW/g

Right touch 4183/Zoom Scan (5x5x7)/Cube 0: Measurement grid: dx=8mm, dy=8mm, dz=5mm
Reference Value = 5.49 V/m; Power Drift = 0.106 dB
Peak SAR (extrapolated) = 0.465 W/kg
SAR(1 g) = 0.346 mW/g; SAR(10 g) = 0.241 mW/g

Info: Interpolated medium parameters used for SAR evaluation.
Maximum value of SAR (measured) = 0.367 mW/g

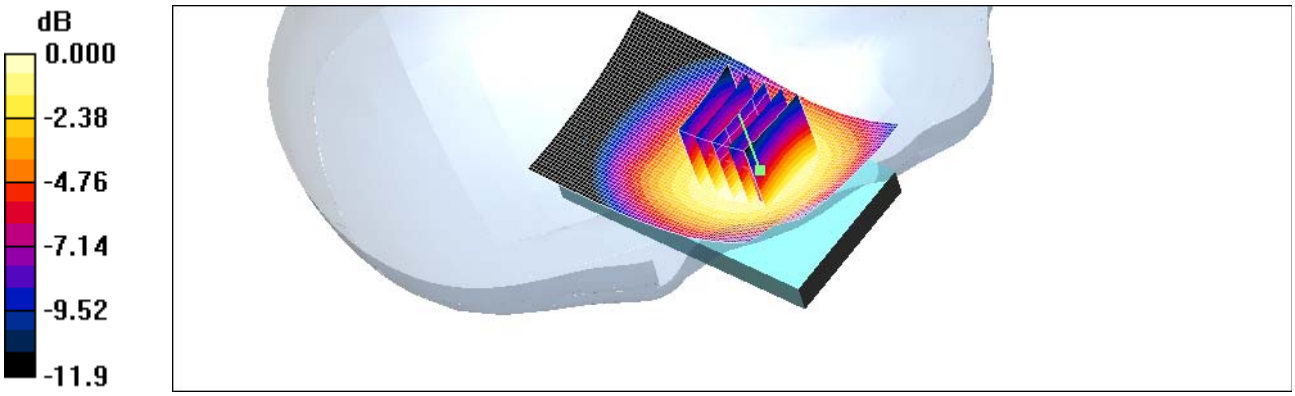

0 dB = 0.367mW/g

Test Laboratory: HCT CO., LTD
EUT Type: Cellular/PCS GSM/GPRS/EDGE/HSDPA Phone with Bluetooth and WLAN
Liquid Temperature: 21.2 ℃
Ambient Temperature: 21.4 ℃
Test Date: June 13, 2011

DUT: LG-P690g; Type: bar; Serial: #1

Communication System: WCDMA850; Frequency: 836.6 MHz;Duty Cycle: 1:1
Medium parameters used (interpolated): f = 836.6 MHz; σ = 0.858 mho/m; ε_r = 41.8; ρ = 1000 kg/m^3
Phantom section: Right Section ; Measurement SW: DASY4, V4.7 Build 71; Postprocessing SW: SEMCAD, V1.8 Build 184

DASY4 Configuration:
- Probe: ES3DV3 - SN3161; ConvF(5.84, 5.84, 5.84); Calibrated: 2011-03-17
- Sensor-Surface: 4mm (Mechanical Surface Detection)
- Electronics: DAE3 Sn446; Calibrated: 2010-09-21
- Phantom: SAM 835/900 MHz; Type: SAM

Right tilt 4183/Area Scan (51x81x1): Measurement grid: dx=15mm, dy=15mm

Info: Interpolated medium parameters used for SAR evaluation.
Maximum value of SAR (interpolated) = 0.223 mW/g

Right tilt 4183/Zoom Scan (5x5x7)/Cube 0: Measurement grid: dx=8mm, dy=8mm, dz=5mm
Reference Value = 7.88 V/m; Power Drift = 0.062 dB
Peak SAR (extrapolated) = 0.281 W/kg
SAR(1 g) = 0.211 mW/g; SAR(10 g) = 0.148 mW/g

Info: Interpolated medium parameters used for SAR evaluation.
Maximum value of SAR (measured) = 0.223 mW/g

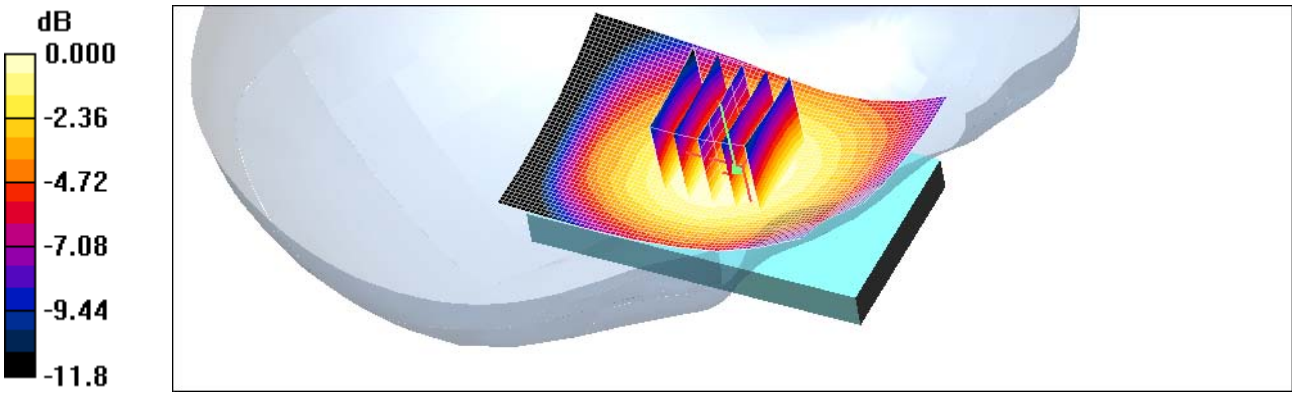

0 dB = 0.223mW/g

Test Laboratory: HCT CO., LTD
EUT Type: Cellular/PCS GSM/GPRS/EDGE/HSDPA Phone with Bluetooth and WLAN
Liquid Temperature: 21.1 ℃
Ambient Temperature: 21.3 ℃
Test Date: June 14, 2011

DUT: LG-P690g; Type: bar; Serial: #1

Communication System: WCDMA1900; Frequency: 1880 MHz;Duty Cycle: 1:1
Medium parameters used: f = 1880 MHz; σ = 1.39 mho/m; ε_r = 39.1; ρ = 1000 kg/m^3
Phantom section: Left Section ; Measurement SW: DASY4, V4.7 Build 71; Postprocessing SW: SEMCAD, V1.8 Build 184

DASY4 Configuration:
- Probe: ES3DV3 - SN3161; ConvF(4.91, 4.91, 4.91); Calibrated: 2011-03-17
- Sensor-Surface: 4mm (Mechanical Surface Detection)
- Electronics: DAE3 Sn446; Calibrated: 2010-09-21
- Phantom: SAM 1800/1900 MHz; Type: SAM

Left touch 9400/Area Scan (51x81x1): Measurement grid: dx=15mm, dy=15mm
Maximum value of SAR (interpolated) = 0.816 mW/g

Left touch 9400/Zoom Scan (5x5x7)/Cube 0: Measurement grid: dx=8mm, dy=8mm, dz=5mm
Reference Value = 8.32 V/m; Power Drift = 0.026 dB
Peak SAR (extrapolated) = 1.32 W/kg
SAR(1 g) = 0.764 mW/g; SAR(10 g) = 0.416 mW/g
Maximum value of SAR (measured) = 0.846 mW/g

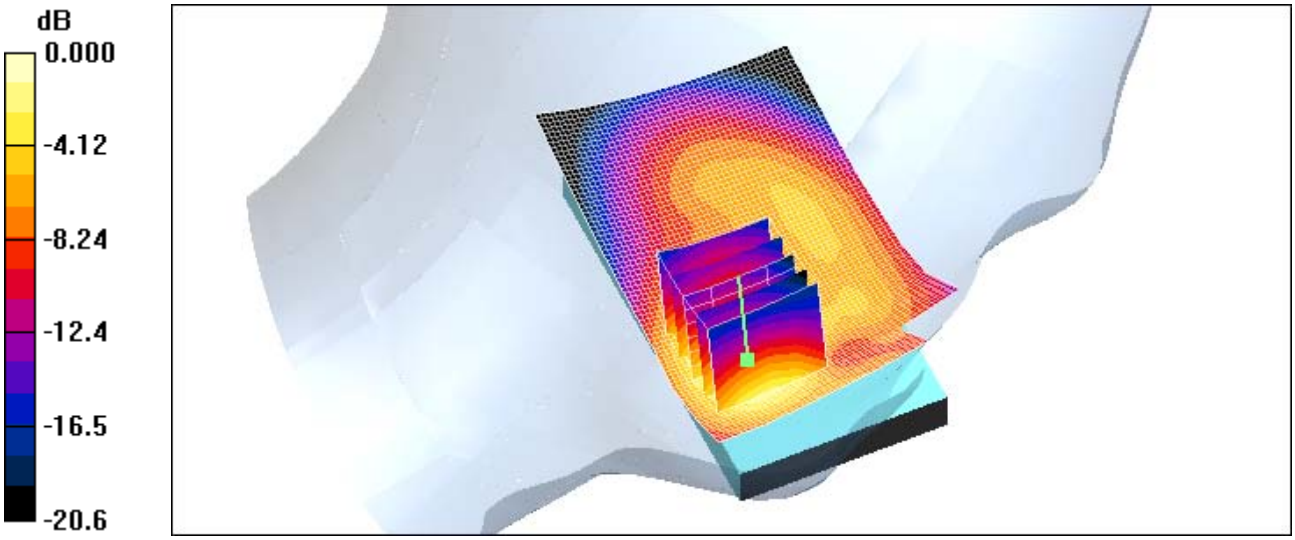

0 dB = 0.846mW/g

Test Laboratory: HCT CO., LTD
EUT Type: Cellular/PCS GSM/GPRS/EDGE/HSDPA Phone with Bluetooth and WLAN
Liquid Temperature: 21.1 ℃
Ambient Temperature: 21.3 ℃
Test Date: June 14, 2011

DUT: LG-P690g; Type: bar; Serial: #1

Communication System: WCDMA1900; Frequency: 1880 MHz;Duty Cycle: 1:1
Medium parameters used: f = 1880 MHz; σ = 1.39 mho/m; ε_r = 39.1; ρ = 1000 kg/m^3
Phantom section: Left Section ; Measurement SW: DASY4, V4.7 Build 71; Postprocessing SW: SEMCAD, V1.8 Build 184

DASY4 Configuration:
- Probe: ES3DV3 - SN3161; ConvF(4.91, 4.91, 4.91); Calibrated: 2011-03-17
- Sensor-Surface: 4mm (Mechanical Surface Detection)
- Electronics: DAE3 Sn446; Calibrated: 2010-09-21
- Phantom: SAM 1800/1900 MHz; Type: SAM

Left tilt 9400/Area Scan (51x81x1): Measurement grid: dx=15mm, dy=15mm
Maximum value of SAR (interpolated) = 0.335 mW/g

Left tilt 9400/Zoom Scan (5x5x7)/Cube 0: Measurement grid: dx=8mm, dy=8mm, dz=5mm
Reference Value = 12.5 V/m; Power Drift = -0.039 dB
Peak SAR (extrapolated) = 0.503 W/kg
SAR(1 g) = 0.301 mW/g; SAR(10 g) = 0.173 mW/g
Maximum value of SAR (measured) = 0.326 mW/g

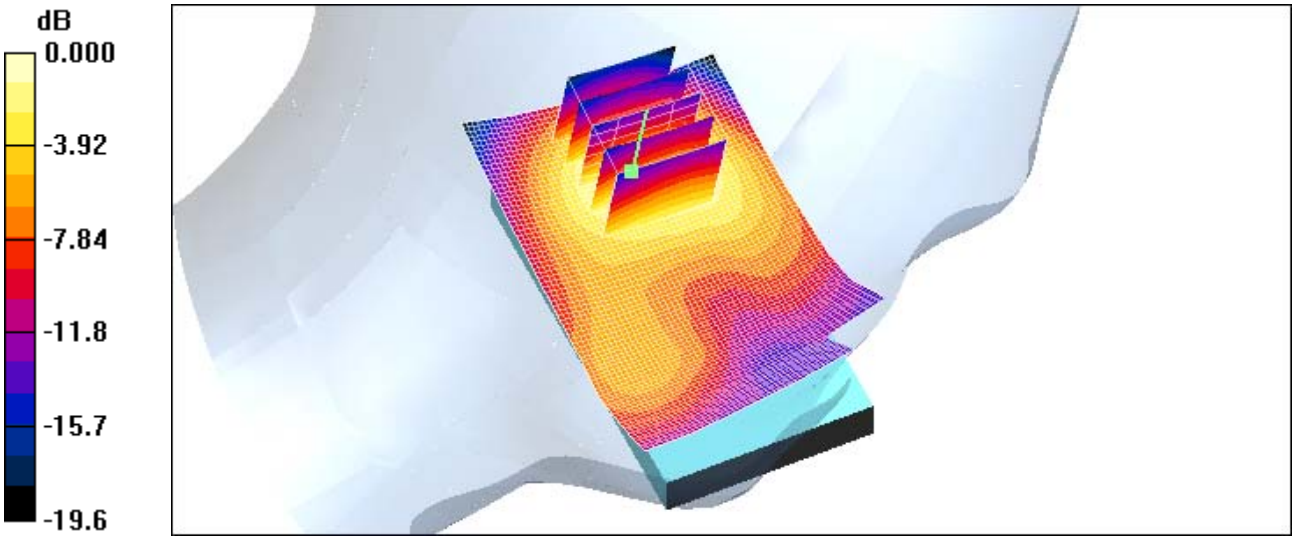

0 dB = 0.326mW/g

Test Laboratory: HCT CO., LTD
EUT Type: Cellular/PCS GSM/GPRS/EDGE/HSDPA Phone with Bluetooth and WLAN
Liquid Temperature: 21.1 ℃
Ambient Temperature: 21.3 ℃
Test Date: June 14, 2011

DUT: LG-P690g; Type: bar; Serial: #1

Communication System: WCDMA1900; Frequency: 1880 MHz;Duty Cycle: 1:1
Medium parameters used: f = 1880 MHz; σ = 1.39 mho/m; ε_r = 39.1; ρ = 1000 kg/m^3
Phantom section: Right Section ; Measurement SW: DASY4, V4.7 Build 71; Postprocessing SW: SEMCAD, V1.8 Build 184

DASY4 Configuration:
- Probe: ES3DV3 - SN3161; ConvF(4.91, 4.91, 4.91); Calibrated: 2011-03-17
- Sensor-Surface: 4mm (Mechanical Surface Detection)
- Electronics: DAE3 Sn446; Calibrated: 2010-09-21
- Phantom: SAM 1800/1900 MHz; Type: SAM

Right touch 9400/Area Scan (51x81x1): Measurement grid: dx=15mm, dy=15mm
Maximum value of SAR (interpolated) = 0.618 mW/g

Right touch 9400/Zoom Scan (5x5x7)/Cube 0: Measurement grid: dx=8mm, dy=8mm, dz=5mm
Reference Value = 8.45 V/m; Power Drift = 0.101 dB
Peak SAR (extrapolated) = 0.891 W/kg
SAR(1 g) = 0.534 mW/g; SAR(10 g) = 0.310 mW/g
Maximum value of SAR (measured) = 0.582 mW/g

Right touch 9400/Zoom Scan (5x5x7)/Cube 1: Measurement grid: dx=8mm, dy=8mm, dz=5mm
Reference Value = 8.45 V/m; Power Drift = 0.101 dB
Peak SAR (extrapolated) = 0.882 W/kg
SAR(1 g) = 0.516 mW/g; SAR(10 g) = 0.288 mW/g
Maximum value of SAR (measured) = 0.567 mW/g

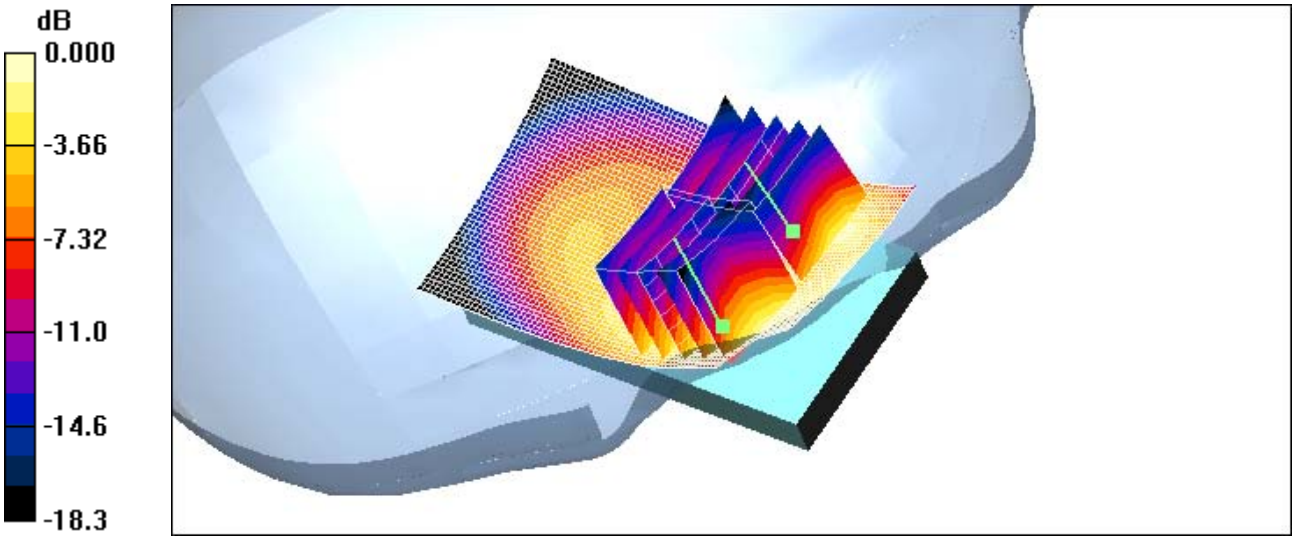

0 dB = 0.567mW/g

Test Laboratory: HCT CO., LTD
EUT Type: Cellular/PCS GSM/GPRS/EDGE/HSDPA Phone with Bluetooth and WLAN
Liquid Temperature: 21.1 ℃
Ambient Temperature: 21.3 ℃
Test Date: June 14, 2011

DUT: LG-P690g; Type: bar; Serial: #1

Communication System: WCDMA1900; Frequency: 1880 MHz;Duty Cycle: 1:1
Medium parameters used: f = 1880 MHz; σ = 1.39 mho/m; ε_r = 39.1; ρ = 1000 kg/m^3
Phantom section: Right Section ; Measurement SW: DASY4, V4.7 Build 71; Postprocessing SW: SEMCAD, V1.8 Build 184

DASY4 Configuration:
- Probe: ES3DV3 - SN3161; ConvF(4.91, 4.91, 4.91); Calibrated: 2011-03-17
- Sensor-Surface: 4mm (Mechanical Surface Detection)
- Electronics: DAE3 Sn446; Calibrated: 2010-09-21
- Phantom: SAM 1800/1900 MHz; Type: SAM

Right tilt 9400/Area Scan (51x81x1): Measurement grid: dx=15mm, dy=15mm
Maximum value of SAR (interpolated) = 0.299 mW/g

Right tilt 9400/Zoom Scan (5x5x7)/Cube 0: Measurement grid: dx=8mm, dy=8mm, dz=5mm
Reference Value = 12.5 V/m; Power Drift = -0.023 dB
Peak SAR (extrapolated) = 0.431 W/kg
SAR(1 g) = 0.259 mW/g; SAR(10 g) = 0.149 mW/g
Maximum value of SAR (measured) = 0.283 mW/g

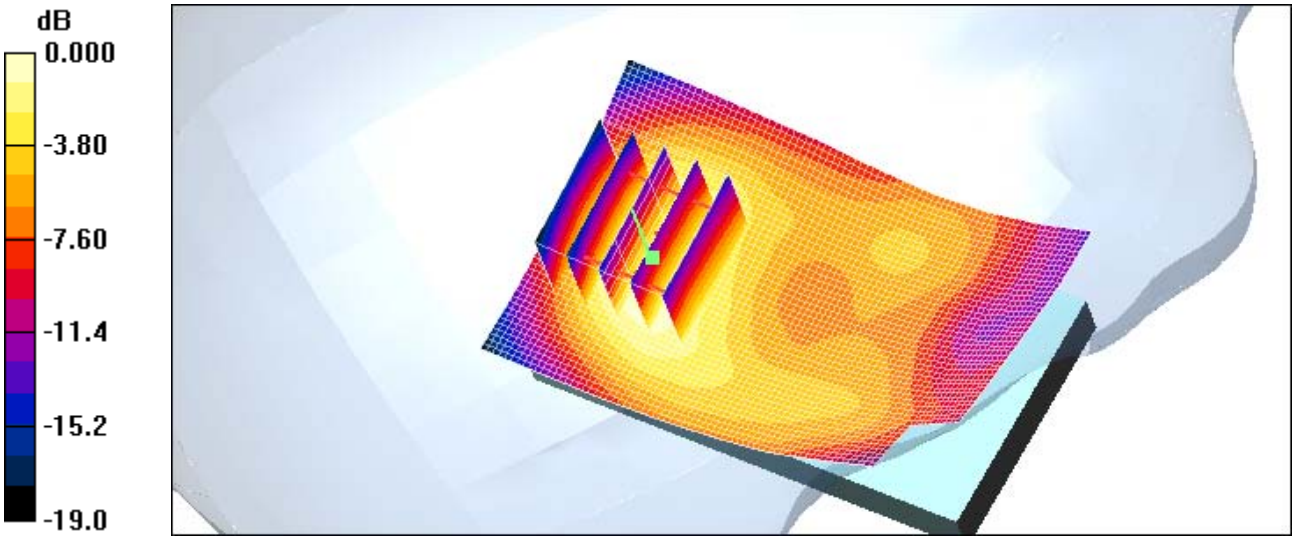

0 dB = 0.283mW/g

Test Laboratory:	HCT CO., LTD
EUT Type:	Cellular/PCS GSM/GPRS/EDGE/HSDPA Phone with Bluetooth and WLAN
Liquid Temperature:	21.2 ℃
Ambient Temperature:	21.4 ℃
Test Date:	June 13, 2011

DUT: LG-P690g; Type: bar; Serial: #1

Communication System: 2450MHz FCC; Frequency: 2462 MHz;Duty Cycle: 1:1
Medium parameters used (interpolated): f = 2462 MHz; σ = 1.79 mho/m; ε_r = 38.7; ρ = 1000 kg/m^3
Phantom section: Left Section ; Measurement SW: DASY4, V4.7 Build 71; Postprocessing SW: SEMCAD, V1.8 Build 184

DASY4 Configuration:
- Probe: ES3DV3 - SN3161; ConvF(4.26, 4.26, 4.26); Calibrated: 2011-03-17
- Sensor-Surface: 4mm (Mechanical Surface Detection)
- Electronics: DAE3 Sn446; Calibrated: 2010-09-21
- Phantom: SAM 1800/1900 MHz; Type: SAM

Left touch 11/Area Scan (51x81x1): Measurement grid: dx=15mm, dy=15mm

Info: Interpolated medium parameters used for SAR evaluation.
Maximum value of SAR (interpolated) = 0.376 mW/g

Left touch 11/Zoom Scan (5x5x7)/Cube 0: Measurement grid: dx=8mm, dy=8mm, dz=5mm
Reference Value = 4.07 V/m; Power Drift = 0.099 dB
Peak SAR (extrapolated) = 1.11 W/kg
SAR(1 g) = 0.422 mW/g; SAR(10 g) = 0.166 mW/g

Maximum value of SAR (measured) = 0.471 mW/g

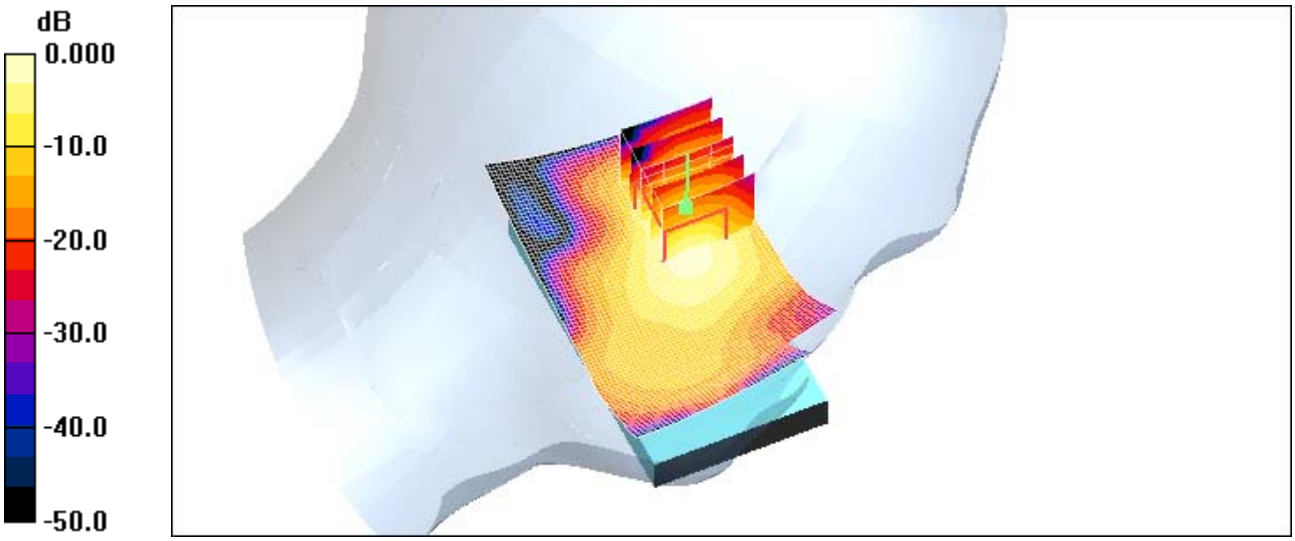

0 dB = 0.471mW/g

Test Laboratory: HCT CO., LTD
EUT Type: Cellular/PCS GSM/GPRS/EDGE/HSDPA Phone with Bluetooth and WLAN
Liquid Temperature: 21.2 ℃
Ambient Temperature: 21.4 ℃
Test Date: June 13, 2011

DUT: LG-P690g; Type: bar; Serial: #1

Communication System: 2450MHz FCC; Frequency: 2462 MHz;Duty Cycle: 1:1
Medium parameters used (interpolated): f = 2462 MHz; σ = 1.79 mho/m; ε_r = 38.7; ρ = 1000 kg/m^3
Phantom section: Left Section ; Measurement SW: DASY4, V4.7 Build 71; Postprocessing SW: SEMCAD, V1.8 Build 184

DASY4 Configuration:
- Probe: ES3DV3 - SN3161; ConvF(4.26, 4.26, 4.26); Calibrated: 2011-03-17
- Sensor-Surface: 4mm (Mechanical Surface Detection)
- Electronics: DAE3 Sn446; Calibrated: 2010-09-21
- Phantom: SAM 1800/1900 MHz; Type: SAM

Left tilt 11/Area Scan (51x81x1): Measurement grid: dx=15mm, dy=15mm

Info: Interpolated medium parameters used for SAR evaluation.
Maximum value of SAR (interpolated) = 0.103 mW/g

Left tilt 11/Zoom Scan (5x5x7)/Cube 0: Measurement grid: dx=8mm, dy=8mm, dz=5mm
Reference Value = 2.70 V/m; Power Drift = 0.012 dB
Peak SAR (extrapolated) = 0.271 W/kg
SAR(1 g) = 0.112 mW/g; SAR(10 g) = 0.047 mW/g

Info: Interpolated medium parameters used for SAR evaluation.
Maximum value of SAR (measured) = 0.138 mW/g

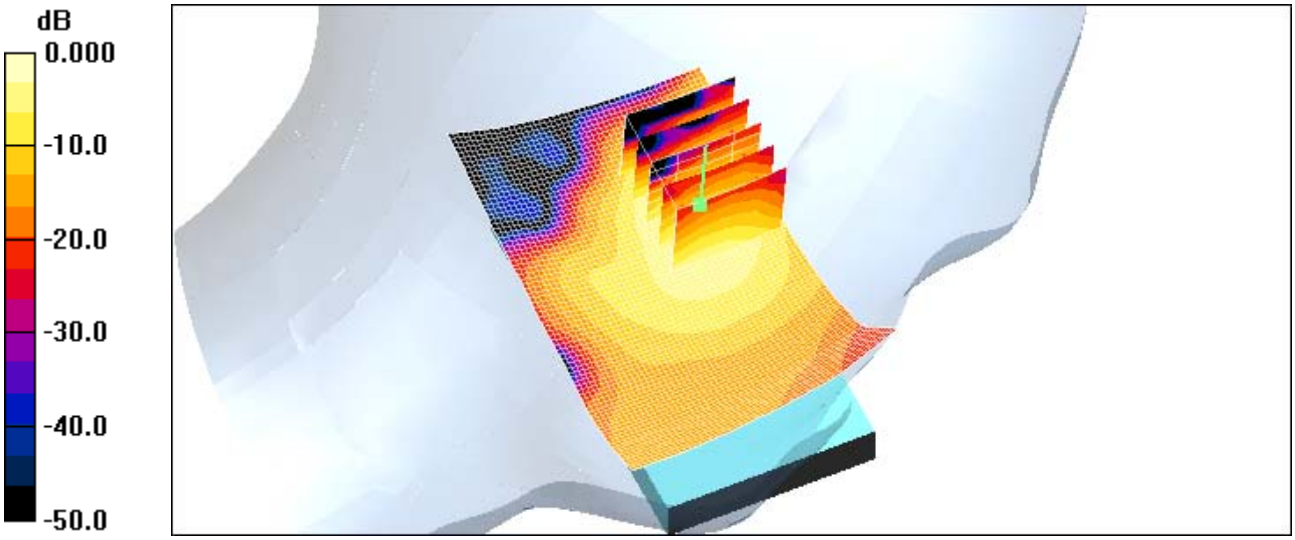

0 dB = 0.138mW/g

Test Laboratory: HCT CO., LTD
EUT Type: Cellular/PCS GSM/GPRS/EDGE/HSDPA Phone with Bluetooth and WLAN
Liquid Temperature: 21.2 ℃
Ambient Temperature: 21.4 ℃
Test Date: June 13, 2011

DUT: LG-P690g; Type: bar; Serial: #1

Communication System: 2450MHz FCC; Frequency: 2462 MHz;Duty Cycle: 1:1
Medium parameters used (interpolated): f = 2462 MHz; σ = 1.79 mho/m; ε_r = 38.7; ρ = 1000 kg/m^3
Phantom section: Right Section ; Measurement SW: DASY4, V4.7 Build 71; Postprocessing SW: SEMCAD, V1.8 Build 184

DASY4 Configuration:
- Probe: ES3DV3 - SN3161; ConvF(4.26, 4.26, 4.26); Calibrated: 2011-03-17
- Sensor-Surface: 4mm (Mechanical Surface Detection)
- Electronics: DAE3 Sn446; Calibrated: 2010-09-21
- Phantom: SAM 1800/1900 MHz; Type: SAM

Right touch 11/Area Scan (51x81x1): Measurement grid: dx=15mm, dy=15mm

Info: Interpolated medium parameters used for SAR evaluation.
Maximum value of SAR (interpolated) = 0.178 mW/g

Right touch 11/Zoom Scan (5x5x7)/Cube 0: Measurement grid: dx=8mm, dy=8mm, dz=5mm
Reference Value = 2.59 V/m; Power Drift = 0.056 dB
Peak SAR (extrapolated) = 0.323 W/kg
SAR(1 g) = 0.156 mW/g; SAR(10 g) = 0.075 mW/g

Info: Interpolated medium parameters used for SAR evaluation.
Maximum value of SAR (measured) = 0.167 mW/g

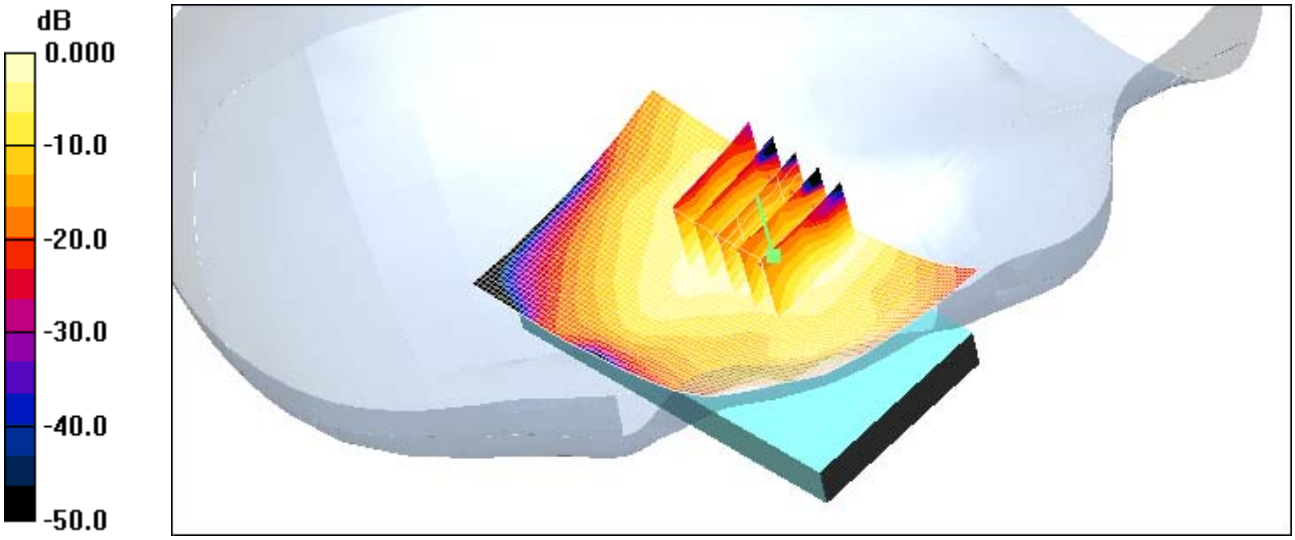

0 dB = 0.167mW/g

Test Laboratory: HCT CO., LTD
EUT Type: Cellular/PCS GSM/GPRS/EDGE/HSDPA Phone with Bluetooth and WLAN
Liquid Temperature: 21.2 ℃
Ambient Temperature: 21.4 ℃
Test Date: June 13, 2011

DUT: LG-P690g; Type: bar; Serial: #1

Communication System: 2450MHz FCC; Frequency: 2462 MHz;Duty Cycle: 1:1
Medium parameters used (interpolated): f = 2462 MHz; σ = 1.79 mho/m; ε_r = 38.7; ρ = 1000 kg/m^3
Phantom section: Right Section ; Measurement SW: DASY4, V4.7 Build 71; Postprocessing SW: SEMCAD, V1.8 Build 184

DASY4 Configuration:
- Probe: ES3DV3 - SN3161; ConvF(4.26, 4.26, 4.26); Calibrated: 2011-03-17
- Sensor-Surface: 4mm (Mechanical Surface Detection)
- Electronics: DAE3 Sn446; Calibrated: 2010-09-21
- Phantom: SAM 1800/1900 MHz; Type: SAM

Right tilt 11/Area Scan (51x81x1): Measurement grid: dx=15mm, dy=15mm

Info: Interpolated medium parameters used for SAR evaluation.
Maximum value of SAR (interpolated) = 0.064 mW/g

Right tilt 11/Zoom Scan (5x5x7)/Cube 0: Measurement grid: dx=8mm, dy=8mm, dz=5mm
Reference Value = 1.96 V/m; Power Drift = 0.067 dB
Peak SAR (extrapolated) = 0.123 W/kg
SAR(1 g) = 0.058 mW/g; SAR(10 g) = 0.027 mW/g

Info: Interpolated medium parameters used for SAR evaluation.
Maximum value of SAR (measured) = 0.061 mW/g

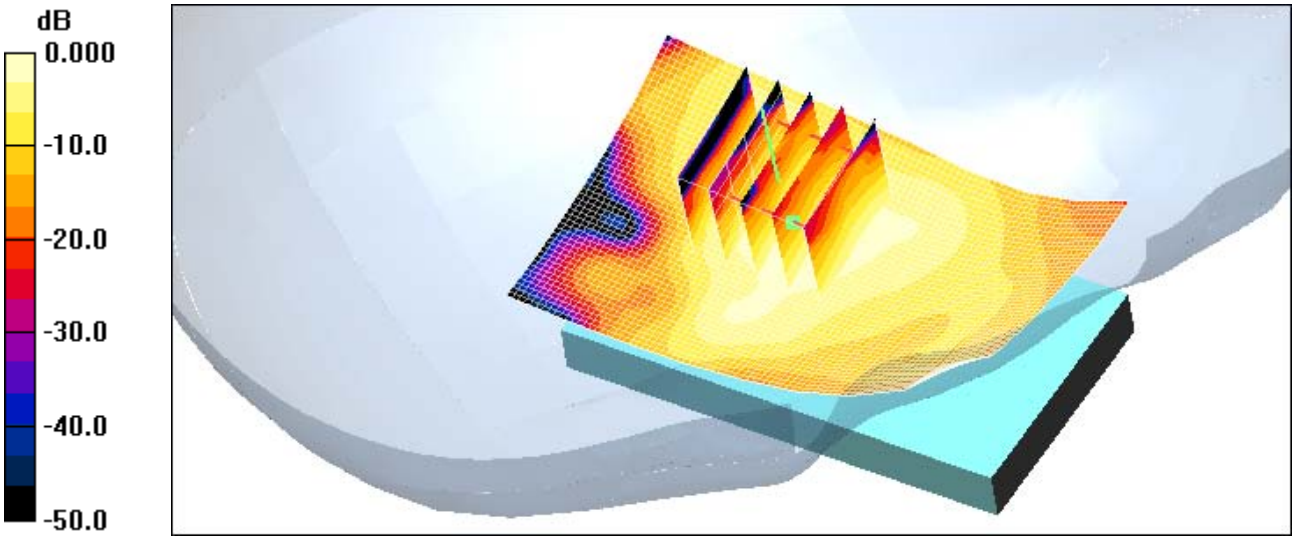

0 dB = 0.061mW/g

Test Laboratory: HCT CO., LTD
EUT Type: Cellular/PCS GSM/GPRS/EDGE/HSDPA Phone with Bluetooth and WLAN
Liquid Temperature: 21.2 ℃
Ambient Temperature: 21.4 ℃
Test Date: June 13, 2011

DUT: LG-P690g; Type: bar; Serial: #1

Communication System: GSM 850; Frequency: 836.6 MHz;Duty Cycle: 1:2.075
Medium parameters used (interpolated): f = 836.6 MHz; σ = 0.981 mho/m; ε_r = 56.8; ρ = 1000 kg/m^3
Phantom section: Flat Section ; Measurement SW: DASY4, V4.7 Build 71; Postprocessing SW: SEMCAD, V1.8 Build 184

DASY4 Configuration:
- Probe: ES3DV3 - SN3161; ConvF(5.86, 5.86, 5.86); Calibrated: 2011-03-17
- Sensor-Surface: 4mm (Mechanical Surface Detection)
- Electronics: DAE3 Sn446; Calibrated: 2010-09-21
- Phantom: SAM 835/900 MHz; Type: SAM

GSM850 Hotspot Front 190/Area Scan (51x91x1): Measurement grid: dx=15mm, dy=15mm

Info: Interpolated medium parameters used for SAR evaluation.
Maximum value of SAR (interpolated) = 0.513 mW/g

GSM850 Hotspot Front 190/Zoom Scan (5x5x7)/Cube 0: Measurement grid: dx=8mm, dy=8mm, dz=5mm
Reference Value = 9.83 V/m; Power Drift = 0.023 dB
Peak SAR (extrapolated) = 0.659 W/kg
SAR(1 g) = 0.490 mW/g; SAR(10 g) = 0.356 mW/g

Info: Interpolated medium parameters used for SAR evaluation.
Maximum value of SAR (measured) = 0.518 mW/g

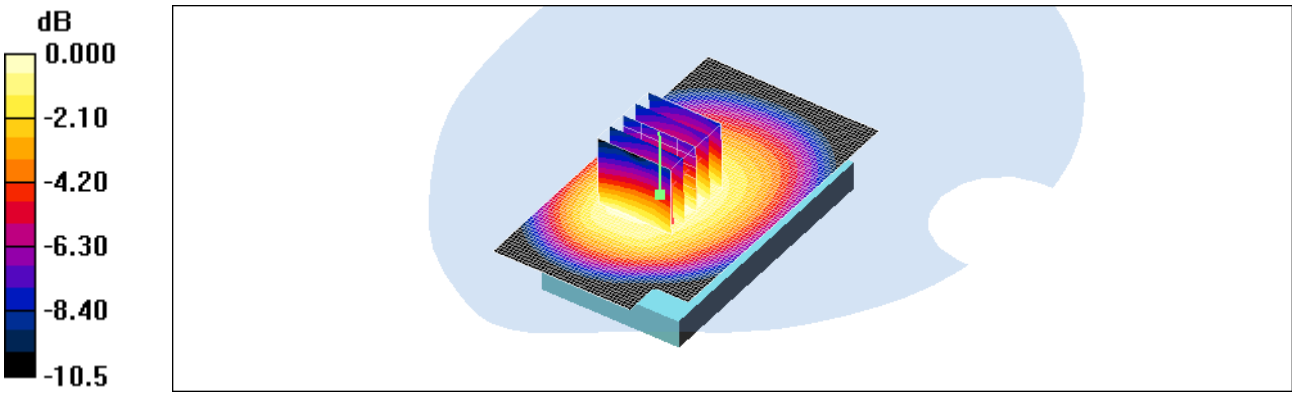

0 dB = 0.518mW/g

Test Laboratory: HCT CO., LTD
EUT Type: Cellular/PCS GSM/GPRS/EDGE/HSDPA Phone with Bluetooth and WLAN
Liquid Temperature: 21.2 ℃
Ambient Temperature: 21.4 ℃
Test Date: June 13, 2011

DUT: LG-P690g; Type: bar; Serial: #1

Communication System: GSM 850; Frequency: 824.2 MHz;Duty Cycle: 1:2.075
Medium parameters used: f = 825 MHz; σ = 0.971 mho/m; ε_r = 56.9; ρ = 1000 kg/m^3
Phantom section: Flat Section ; Measurement SW: DASY4, V4.7 Build 71; Postprocessing SW: SEMCAD, V1.8 Build 184

DASY4 Configuration:
- Probe: ES3DV3 - SN3161; ConvF(5.86, 5.86, 5.86); Calibrated: 2011-03-17
- Sensor-Surface: 4mm (Mechanical Surface Detection)
- Electronics: DAE3 Sn446; Calibrated: 2010-09-21
- Phantom: SAM 835/900 MHz; Type: SAM

GSM850 Hotspot Rear 128/Area Scan (51x91x1): Measurement grid: dx=15mm, dy=15mm
Maximum value of SAR (interpolated) = 0.907 mW/g

GSM850 Hotspot Rear 128/Zoom Scan (5x5x7)/Cube 0: Measurement grid: dx=8mm, dy=8mm, dz=5mm
Reference Value = 12.6 V/m; Power Drift = -0.114 dB
Peak SAR (extrapolated) = 1.12 W/kg
SAR(1 g) = 0.840 mW/g; SAR(10 g) = 0.597 mW/g
Maximum value of SAR (measured) = 0.893 mW/g

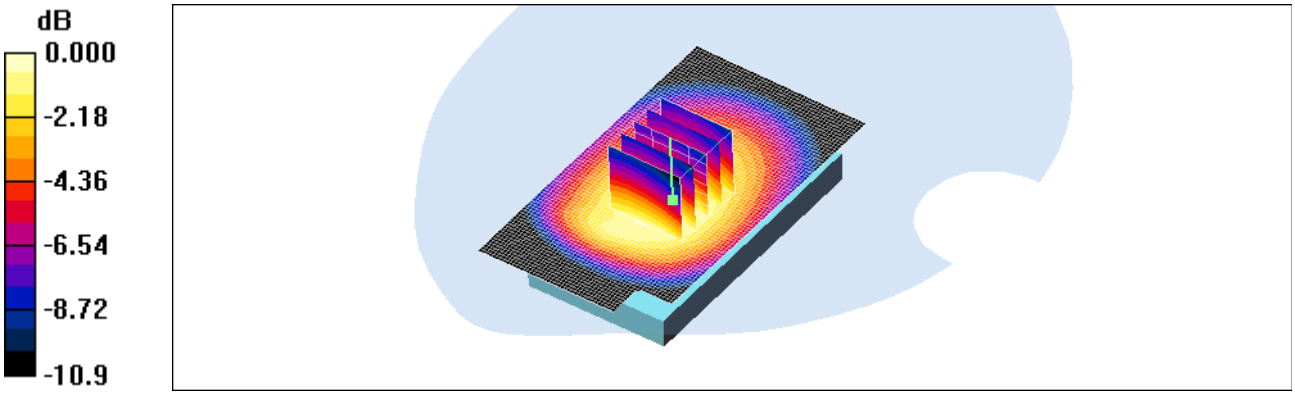

0 dB = 0.893mW/g

Test Laboratory: HCT CO., LTD
EUT Type: Cellular/PCS GSM/GPRS/EDGE/HSDPA Phone with Bluetooth and WLAN
Liquid Temperature: 21.2 ℃
Ambient Temperature: 21.4 ℃
Test Date: June 13, 2011

DUT: LG-P690g; Type: bar; Serial: #1

Communication System: GSM 850; Frequency: 836.6 MHz;Duty Cycle: 1:2.075
Medium parameters used (interpolated): f = 836.6 MHz; σ = 0.981 mho/m; ε_r = 56.8; ρ = 1000 kg/m^3
Phantom section: Flat Section ; Measurement SW: DASY4, V4.7 Build 71; Postprocessing SW: SEMCAD, V1.8 Build 184

DASY4 Configuration:
- Probe: ES3DV3 - SN3161; ConvF(5.86, 5.86, 5.86); Calibrated: 2011-03-17
- Sensor-Surface: 4mm (Mechanical Surface Detection)
- Electronics: DAE3 Sn446; Calibrated: 2010-09-21
- Phantom: SAM 835/900 MHz; Type: SAM

GSM850 Hotspot Rear 190/Area Scan (51x91x1): Measurement grid: dx=15mm, dy=15mm

Info: Interpolated medium parameters used for SAR evaluation.
Maximum value of SAR (interpolated) = 0.991 mW/g

GSM850 Hotspot Rear 190/Zoom Scan (5x5x7)/Cube 0: Measurement grid: dx=8mm, dy=8mm, dz=5mm
Reference Value = 12.1 V/m; Power Drift = 0.076 dB
Peak SAR (extrapolated) = 1.26 W/kg
SAR(1 g) = 0.926 mW/g; SAR(10 g) = 0.658 mW/g

Info: Interpolated medium parameters used for SAR evaluation.
Maximum value of SAR (measured) = 0.977 mW/g

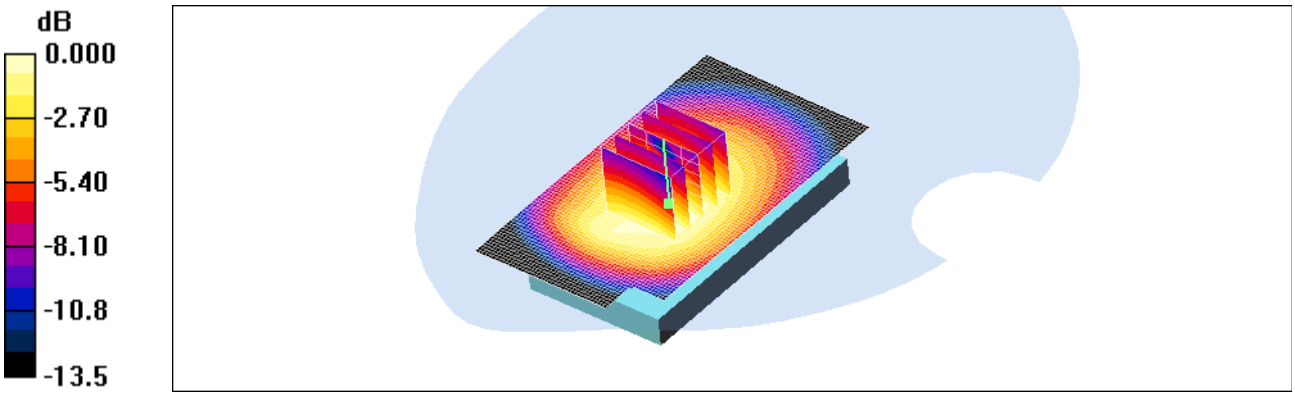

0 dB = 0.977mW/g

Test Laboratory:	HCT CO., LTD
EUT Type:	Cellular/PCS GSM/GPRS/EDGE/HSDPA Phone with Bluetooth and WLAN
Liquid Temperature:	21.2 ℃
Ambient Temperature:	21.4 ℃
Test Date:	June 13, 2011

DUT: LG-P690g; Type: bar; Serial: #1

Communication System: GSM 850; Frequency: 848.8 MHz;Duty Cycle: 1:2.075
Medium parameters used (interpolated): f = 848.8 MHz; σ = 0.991 mho/m; ε_r = 56.7; ρ = 1000 kg/m^3
Phantom section: Flat Section ; Measurement SW: DASY4, V4.7 Build 71; Postprocessing SW: SEMCAD, V1.8 Build 184

DASY4 Configuration:
- Probe: ES3DV3 - SN3161; ConvF(5.86, 5.86, 5.86); Calibrated: 2011-03-17
- Sensor-Surface: 4mm (Mechanical Surface Detection)
- Electronics: DAE3 Sn446; Calibrated: 2010-09-21
- Phantom: SAM 835/900 MHz; Type: SAM

GSM850 Hotspot Rear 251/Area Scan (51x91x1): Measurement grid: dx=15mm, dy=15mm

Info: Interpolated medium parameters used for SAR evaluation.
Maximum value of SAR (interpolated) = 1.08 mW/g

GSM850 Hotspot Rear 251/Zoom Scan (5x5x7)/Cube 0: Measurement grid: dx=8mm, dy=8mm, dz=5mm
Reference Value = 12.9 V/m; Power Drift = 0.008 dB
Peak SAR (extrapolated) = 1.28 W/kg
SAR(1 g) = 1 mW/g; SAR(10 g) = 0.714 mW/g

Info: Interpolated medium parameters used for SAR evaluation.
Maximum value of SAR (measured) = 1.08 mW/g

GSM850 Hotspot Rear 251/Zoom Scan (5x5x7)/Cube 1: Measurement grid: dx=8mm, dy=8mm, dz=5mm
Reference Value = 12.9 V/m; Power Drift = 0.008 dB
Peak SAR (extrapolated) = 1.37 W/kg
SAR(1 g) = 0.912 mW/g; SAR(10 g) = 0.582 mW/g

Info: Interpolated medium parameters used for SAR evaluation.
Maximum value of SAR (measured) = 1.05 mW/g

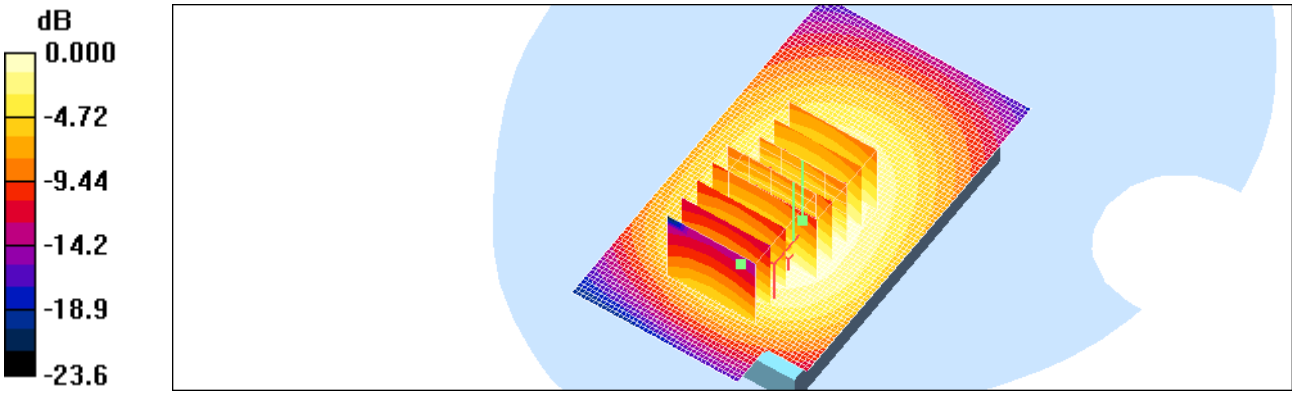

0 dB = 1.05mW/g

Test Laboratory: HCT CO., LTD

EUT Type: Cellular/PCS GSM/GPRS/EDGE/HSDPA Phone with Bluetooth and WLAN

Liquid Temperature: 21.2 ℃

Ambient Temperature: 21.4 ℃

Test Date: June 13, 2011

DUT: LG-P690g; Type: bar; Serial: side

Communication System: GSM 850; Frequency: 836.6 MHz;Duty Cycle: 1:2.075
Medium parameters used (interpolated): f = 836.6 MHz; σ = 0.981 mho/m; ε_r = 56.8; ρ = 1000 kg/m^3
Phantom section: Flat Section ; Measurement SW: DASY4, V4.7 Build 71; Postprocessing SW: SEMCAD, V1.8 Build 184

DASY4 Configuration:
- Probe: ES3DV3 - SN3161; ConvF(5.86, 5.86, 5.86); Calibrated: 2011-03-17
- Sensor-Surface: 4mm (Mechanical Surface Detection)
- Electronics: DAE3 Sn446; Calibrated: 2010-09-21
- Phantom: SAM 835/900 MHz; Type: SAM

GSM850 Hotspot Left 190/Area Scan (31x91x1): Measurement grid: dx=15mm, dy=15mm

Info: Interpolated medium parameters used for SAR evaluation.
Maximum value of SAR (interpolated) = 0.387 mW/g

GSM850 Hotspot Left 190/Zoom Scan (5x5x7)/Cube 0: Measurement grid: dx=8mm, dy=8mm, dz=5mm
Reference Value = 10.8 V/m; Power Drift = -0.043 dB
Peak SAR (extrapolated) = 0.526 W/kg
SAR(1 g) = 0.367 mW/g; SAR(10 g) = 0.233 mW/g
Maximum value of SAR (measured) = 0.398 mW/g

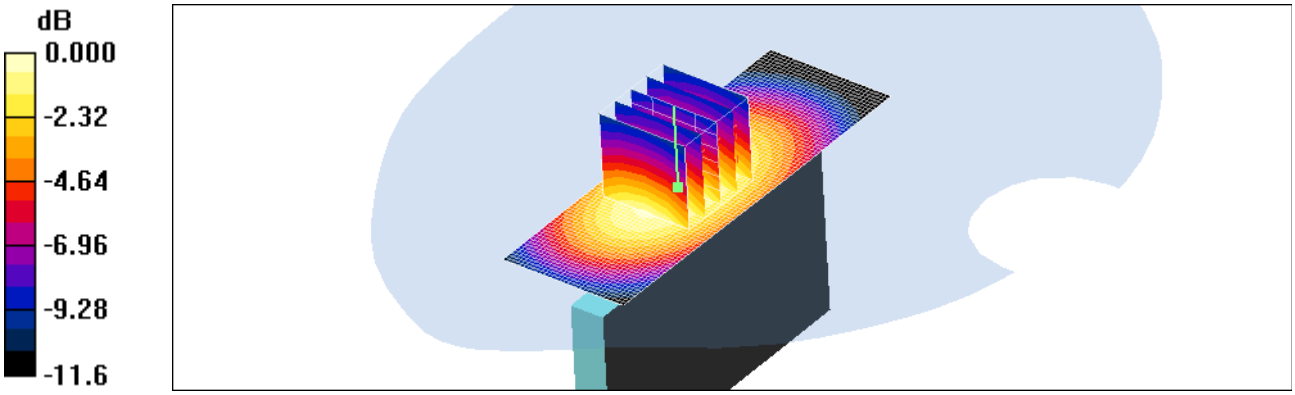

0 dB = 0.398mW/g

Test Laboratory: HCT CO., LTD

EUT Type: Cellular/PCS GSM/GPRS/EDGE/HSDPA Phone with Bluetooth and WLAN

Liquid Temperature: 21.2 ℃

Ambient Temperature: 21.4 ℃

Test Date: June 13, 2011

DUT: LG-P690g; Type: bar; Serial: side

Communication System: GSM 850; Frequency: 836.6 MHz;Duty Cycle: 1:2.075
Medium parameters used (interpolated): f = 836.6 MHz; σ = 0.981 mho/m; ε_r = 56.8; ρ = 1000 kg/m^3
Phantom section: Flat Section ; Measurement SW: DASY4, V4.7 Build 71; Postprocessing SW: SEMCAD, V1.8 Build 184

DASY4 Configuration:
- Probe: ES3DV3 - SN3161; ConvF(5.86, 5.86, 5.86); Calibrated: 2011-03-17
- Sensor-Surface: 4mm (Mechanical Surface Detection)
- Electronics: DAE3 Sn446; Calibrated: 2010-09-21
- Phantom: SAM 835/900 MHz; Type: SAM

GSM850 Hotspot Right 190/Area Scan (31x91x1): Measurement grid: dx=15mm, dy=15mm

Info: Interpolated medium parameters used for SAR evaluation.
Maximum value of SAR (interpolated) = 0.436 mW/g

GSM850 Hotspot Right 190/Zoom Scan (5x5x7)/Cube 0: Measurement grid: dx=8mm, dy=8mm, dz=5mm
Reference Value = 11.3 V/m; Power Drift = 0.074 dB
Peak SAR (extrapolated) = 0.829 W/kg
SAR(1 g) = 0.419 mW/g; SAR(10 g) = 0.286 mW/g

Info: Interpolated medium parameters used for SAR evaluation.
Maximum value of SAR (measured) = 0.447 mW/g

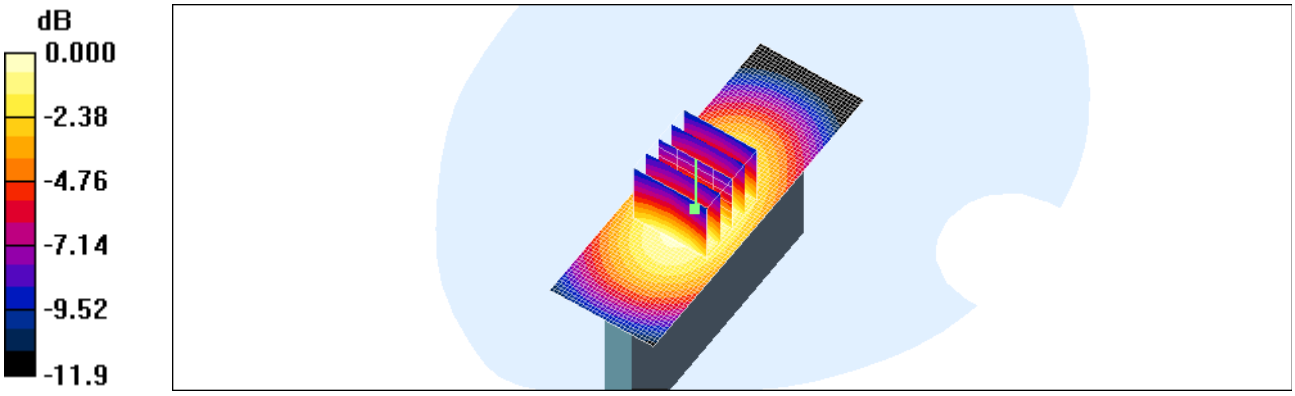

0 dB = 0.447mW/g

Test Laboratory: HCT CO., LTD

EUT Type: Cellular/PCS GSM/GPRS/EDGE/HSDPA Phone with Bluetooth and WLAN

Liquid Temperature: 21.2 ℃

Ambient Temperature: 21.4 ℃

Test Date: June 13, 2011

DUT: LG-P690g; Type: bar; Serial: Top

Communication System: GSM 850; Frequency: 836.6 MHz;Duty Cycle: 1:2.075
Medium parameters used (interpolated): f = 836.6 MHz; σ = 0.981 mho/m; ε_r = 56.8; ρ = 1000 kg/m^3
Phantom section: Flat Section ; Measurement SW: DASY4, V4.7 Build 71; Postprocessing SW: SEMCAD, V1.8 Build 184

DASY4 Configuration:
- Probe: ES3DV3 - SN3161; ConvF(5.86, 5.86, 5.86); Calibrated: 2011-03-17
- Sensor-Surface: 4mm (Mechanical Surface Detection)
- Electronics: DAE3 Sn446; Calibrated: 2010-09-21
- Phantom: SAM 835/900 MHz; Type: SAM

GSM850 Hotspot Bottom 190/Area Scan (31x61x1): Measurement grid: dx=15mm, dy=15mm

Info: Interpolated medium parameters used for SAR evaluation.
Maximum value of SAR (interpolated) = 0.073 mW/g

GSM850 Hotspot Bottom 190/Zoom Scan (5x5x7)/Cube 0: Measurement grid: dx=8mm, dy=8mm, dz=5mm
Reference Value = 7.89 V/m; Power Drift = -0.033 dB
Peak SAR (extrapolated) = 0.102 W/kg
SAR(1 g) = 0.067 mW/g; SAR(10 g) = 0.044 mW/g

Maximum value of SAR (measured) = 0.072 mW/g

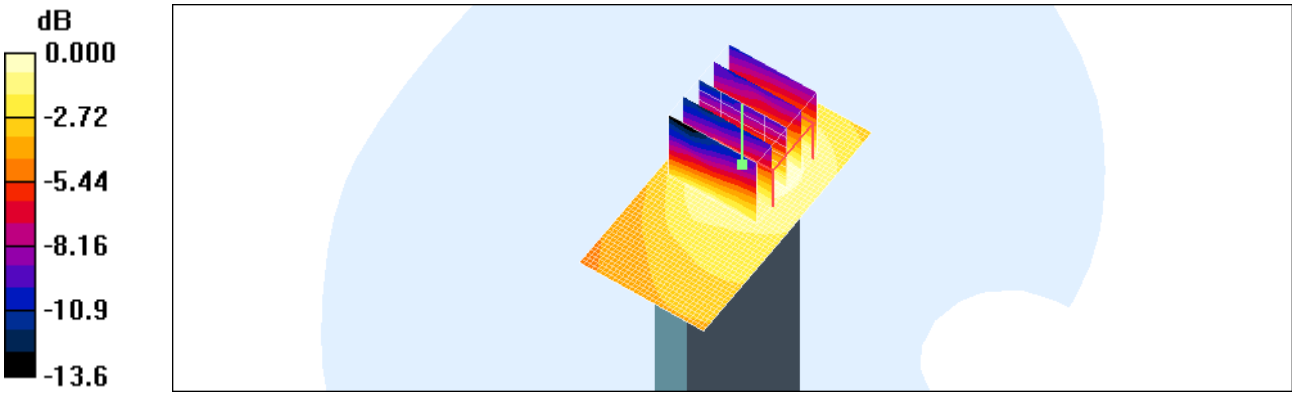

0 dB = 0.072mW/g

Test Laboratory: HCT CO., LTD
EUT Type: Cellular/PCS GSM/GPRS/EDGE/HSDPA Phone with Bluetooth and WLAN
Liquid Temperature: 21.1 ℃
Ambient Temperature: 21.3 ℃
Test Date: June 14, 2011

DUT: LG-P690g; Type: bar; Serial: #1

Communication System: GSM 1900; Frequency: 1880 MHz;Duty Cycle: 1:2.075
Medium parameters used: f = 1880 MHz; σ = 1.54 mho/m; ε_r = 53; ρ = 1000 kg/m^3
Phantom section: Flat Section ; Measurement SW: DASY4, V4.7 Build 71; Postprocessing SW: SEMCAD, V1.8 Build 184

DASY4 Configuration:
- Probe: ES3DV3 - SN3161; ConvF(4.49, 4.49, 4.49); Calibrated: 2011-03-17
- Sensor-Surface: 4mm (Mechanical Surface Detection)
- Electronics: DAE3 Sn446; Calibrated: 2010-09-21
- Phantom: 1800/1900 Phantom; Type: SAM

GSM1900 Hotspot Front 661/Area Scan (51x91x1): Measurement grid: dx=15mm, dy=15mm
Maximum value of SAR (interpolated) = 0.350 mW/g

GSM1900 Hotspot Front 661/Zoom Scan (5x5x7)/Cube 0: Measurement grid: dx=8mm, dy=8mm, dz=5mm
Reference Value = 8.34 V/m; Power Drift = 0.028 dB
Peak SAR (extrapolated) = 0.468 W/kg
SAR(1 g) = 0.307 mW/g; SAR(10 g) = 0.178 mW/g
Maximum value of SAR (measured) = 0.346 mW/g

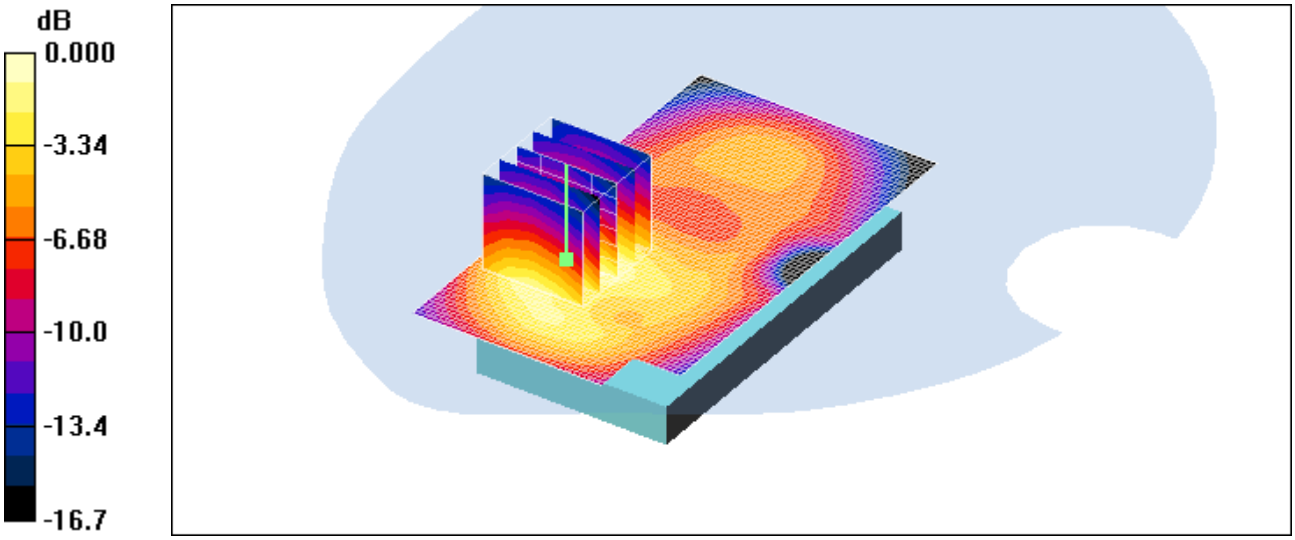

0 dB = 0.346mW/g

Test Laboratory: HCT CO., LTD
EUT Type: Cellular/PCS GSM/GPRS/EDGE/HSDPA Phone with Bluetooth and WLAN
Liquid Temperature: 21.1 ℃
Ambient Temperature: 21.3 ℃
Test Date: June 14, 2011

DUT: LG-P690g; Type: bar; Serial: #1

Communication System: GSM 1900; Frequency: 1880 MHz;Duty Cycle: 1:2.075
Medium parameters used: f = 1880 MHz; σ = 1.54 mho/m; ε_r = 53; ρ = 1000 kg/m^3
Phantom section: Flat Section ; Measurement SW: DASY4, V4.7 Build 71; Postprocessing SW: SEMCAD, V1.8 Build 184

DASY4 Configuration:
- Probe: ES3DV3 - SN3161; ConvF(4.49, 4.49, 4.49); Calibrated: 2011-03-17
- Sensor-Surface: 4mm (Mechanical Surface Detection)
- Electronics: DAE3 Sn446; Calibrated: 2010-09-21
- Phantom: 1800/1900 Phantom; Type: SAM

GSM1900 Hotspot Rear 661/Area Scan (51x91x1): Measurement grid: dx=15mm, dy=15mm
Maximum value of SAR (interpolated) = 0.405 mW/g

GSM1900 Hotspot Rear 661/Zoom Scan (5x5x7)/Cube 0: Measurement grid: dx=8mm, dy=8mm, dz=5mm
Reference Value = 6.77 V/m; Power Drift = 0.026 dB
Peak SAR (extrapolated) = 0.631 W/kg
SAR(1 g) = 0.383 mW/g; SAR(10 g) = 0.225 mW/g
Maximum value of SAR (measured) = 0.413 mW/g

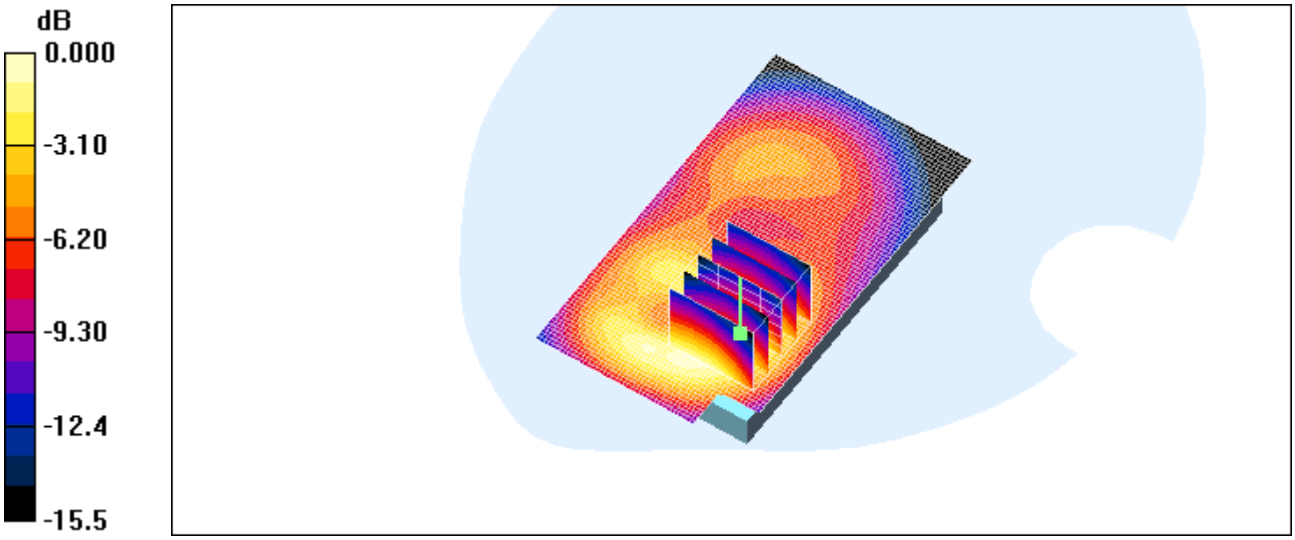

0 dB = 0.413mW/g

Test Laboratory: HCT CO., LTD
EUT Type: Cellular/PCS GSM/GPRS/EDGE/HSDPA Phone with Bluetooth and WLAN
Liquid Temperature: 21.1 ℃
Ambient Temperature: 21.3 ℃
Test Date: June 14, 2011

DUT: LG-P690g; Type: bar; Serial: side

Communication System: GSM 1900; Frequency: 1880 MHz;Duty Cycle: 1:2.075
Medium parameters used: f = 1880 MHz; σ = 1.54 mho/m; ε_r = 53; ρ = 1000 kg/m^3
Phantom section: Flat Section ; Measurement SW: DASY4, V4.7 Build 71; Postprocessing SW: SEMCAD, V1.8 Build 184

DASY4 Configuration:
- Probe: ES3DV3 - SN3161; ConvF(4.49, 4.49, 4.49); Calibrated: 2011-03-17
- Sensor-Surface: 4mm (Mechanical Surface Detection)
- Electronics: DAE3 Sn446; Calibrated: 2010-09-21
- Phantom: 1800/1900 Phantom; Type: SAM

GSM1900 Hotspot Left 661/Area Scan (31x91x1): Measurement grid: dx=15mm, dy=15mm
Maximum value of SAR (interpolated) = 0.142 mW/g

GSM1900 Hotspot Left 661/Zoom Scan (5x5x7)/Cube 0: Measurement grid: dx=8mm, dy=8mm, dz=5mm
Reference Value = 5.65 V/m; Power Drift = -0.011 dB
Peak SAR (extrapolated) = 0.192 W/kg
SAR(1 g) = 0.127 mW/g; SAR(10 g) = 0.077 mW/g
Maximum value of SAR (measured) = 0.139 mW/g

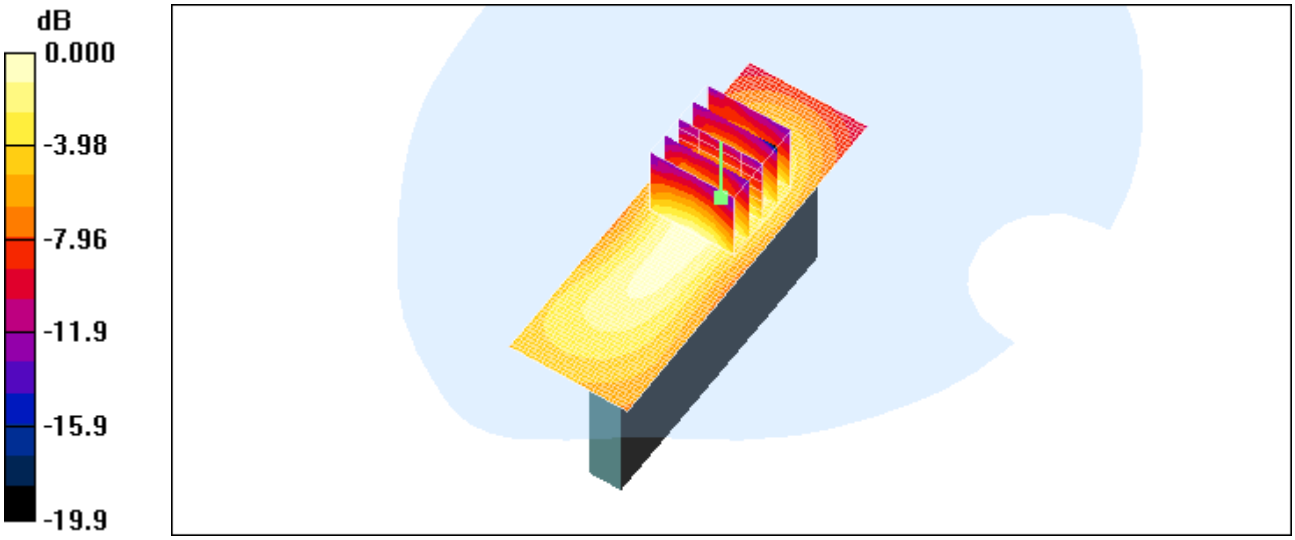

0 dB = 0.139mW/g

Test Laboratory:	HCT CO., LTD
EUT Type:	Cellular/PCS GSM/GPRS/EDGE/HSDPA Phone with Bluetooth and WLAN
Liquid Temperature:	21.1 ℃
Ambient Temperature:	21.3 ℃
Test Date:	June 14, 2011

DUT: LG-P690g; Type: bar; Serial: side

Communication System: GSM 1900; Frequency: 1880 MHz;Duty Cycle: 1:2.075
Medium parameters used: f = 1880 MHz; σ = 1.54 mho/m; ε_r = 53; ρ = 1000 kg/m^3
Phantom section: Flat Section ; Measurement SW: DASY4, V4.7 Build 71; Postprocessing SW: SEMCAD, V1.8 Build 184

DASY4 Configuration:
- Probe: ES3DV3 - SN3161; ConvF(4.49, 4.49, 4.49); Calibrated: 2011-03-17
- Sensor-Surface: 4mm (Mechanical Surface Detection)
- Electronics: DAE3 Sn446; Calibrated: 2010-09-21
- Phantom: 1800/1900 Phantom; Type: SAM

GSM1900 Hotspot Right 661/Area Scan (31x91x1): Measurement grid: dx=15mm, dy=15mm
Maximum value of SAR (interpolated) = 0.122 mW/g

GSM1900 Hotspot Right 661/Zoom Scan (5x5x7)/Cube 0: Measurement grid: dx=8mm, dy=8mm, dz=5mm
Reference Value = 5.04 V/m; Power Drift = 0.144 dB
Peak SAR (extrapolated) = 0.169 W/kg
SAR(1 g) = 0.109 mW/g; SAR(10 g) = 0.066 mW/g
Maximum value of SAR (measured) = 0.118 mW/g

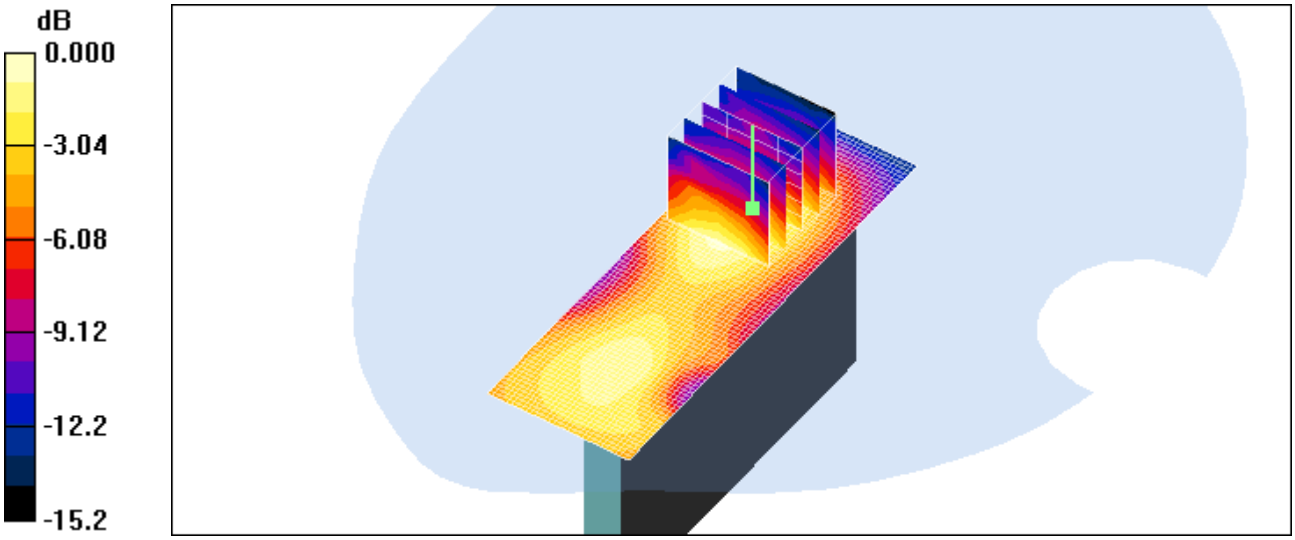

0 dB = 0.118mW/g

Test Laboratory: HCT CO., LTD
EUT Type: Cellular/PCS GSM/GPRS/EDGE/HSDPA Phone with Bluetooth and WLAN
Liquid Temperature: 21.1 ℃
Ambient Temperature: 21.3 ℃
Test Date: June 14, 2011

DUT: LG-P690g; Type: bar; Serial: top

Communication System: GSM 1900; Frequency: 1880 MHz;Duty Cycle: 1:2.075
Medium parameters used: f = 1880 MHz; σ = 1.54 mho/m; ε_r = 53; ρ = 1000 kg/m^3
Phantom section: Flat Section ; Measurement SW: DASY4, V4.7 Build 71; Postprocessing SW: SEMCAD, V1.8 Build 184

DASY4 Configuration:
- Probe: ES3DV3 - SN3161; ConvF(4.49, 4.49, 4.49); Calibrated: 2011-03-17
- Sensor-Surface: 4mm (Mechanical Surface Detection)
- Electronics: DAE3 Sn446; Calibrated: 2010-09-21
- Phantom: 1800/1900 Phantom; Type: SAM

GSM1900 Hotspot Bottom 661/Area Scan (31x61x1): Measurement grid: dx=15mm, dy=15mm
Maximum value of SAR (interpolated) = 0.271 mW/g

GSM1900 Hotspot Bottom 661/Zoom Scan (5x5x7)/Cube 0: Measurement grid: dx=8mm, dy=8mm, dz=5mm
Reference Value = 13.4 V/m; Power Drift = 0.008 dB
Peak SAR (extrapolated) = 0.404 W/kg
SAR(1 g) = 0.254 mW/g; SAR(10 g) = 0.148 mW/g
Maximum value of SAR (measured) = 0.283 mW/g

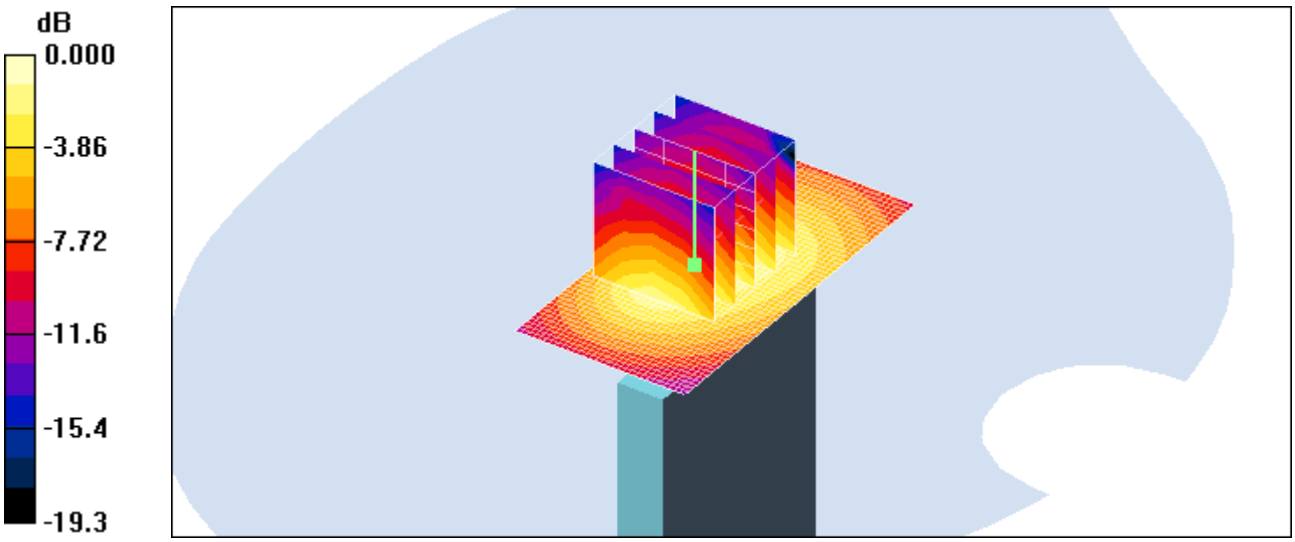

0 dB = 0.283mW/g

Test Laboratory:	HCT CO., LTD
EUT Type:	Cellular/PCS GSM/GPRS/EDGE/HSDPA Phone with Bluetooth and WLAN
Liquid Temperature:	21.2 ℃
Ambient Temperature:	21.4 ℃
Test Date:	June 13, 2011

DUT: LG-P690g; Type: bar; Serial: #1

Communication System: WCDMA850; Frequency: 836.6 MHz;Duty Cycle: 1:1
Medium parameters used (interpolated): f = 836.6 MHz; σ = 0.981 mho/m; ε_r = 56.8; ρ = 1000 kg/m^3
Phantom section: Flat Section ; Measurement SW: DASY4, V4.7 Build 71; Postprocessing SW: SEMCAD, V1.8 Build 184

DASY4 Configuration:
- Probe: ES3DV3 - SN3161; ConvF(5.86, 5.86, 5.86); Calibrated: 2011-03-17
- Sensor-Surface: 4mm (Mechanical Surface Detection)
- Electronics: DAE3 Sn446; Calibrated: 2010-09-21
- Phantom: SAM 835/900 MHz; Type: SAM

WCDMA850 Hotspot Front 4183/Area Scan (51x91x1): Measurement grid: dx=15mm, dy=15mm

Info: Interpolated medium parameters used for SAR evaluation.
Maximum value of SAR (interpolated) = 0.412 mW/g

WCDMA850 Hotspot Front 4183/Zoom Scan (5x5x7)/Cube 0: Measurement grid: dx=8mm, dy=8mm, dz=5mm
Reference Value = 7.24 V/m; Power Drift = -0.034 dB
Peak SAR (extrapolated) = 0.511 W/kg
SAR(1 g) = 0.395 mW/g; SAR(10 g) = 0.289 mW/g

Info: Interpolated medium parameters used for SAR evaluation.
Maximum value of SAR (measured) = 0.417 mW/g

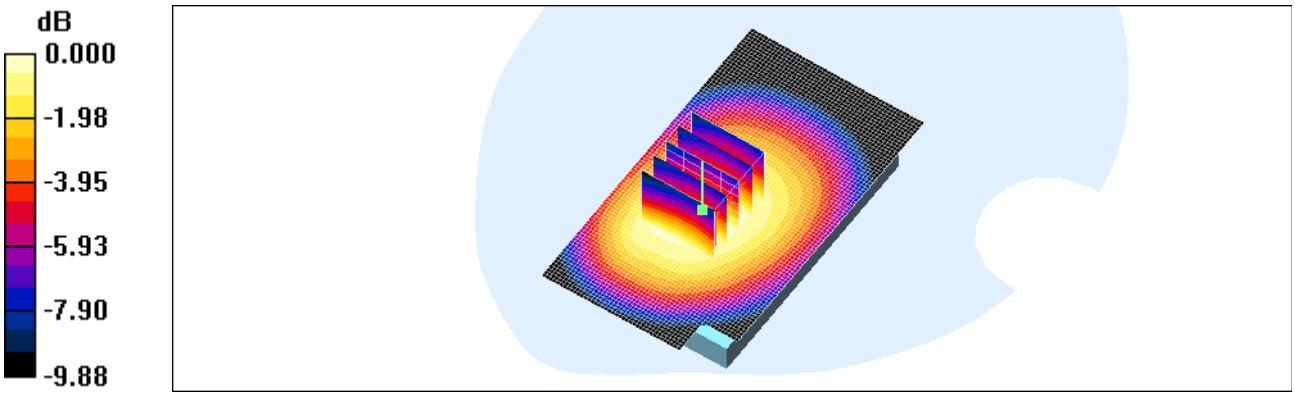

0 dB = 0.417mW/g

Test Laboratory: HCT CO., LTD
EUT Type: Cellular/PCS GSM/GPRS/EDGE/HSDPA Phone with Bluetooth and WLAN
Liquid Temperature: 21.2 ℃
Ambient Temperature: 21.4 ℃
Test Date: June 13, 2011

DUT: LG-P690g; Type: bar; Serial: #1

Communication System: WCDMA850; Frequency: 836.6 MHz;Duty Cycle: 1:1
Medium parameters used (interpolated): f = 836.6 MHz; σ = 0.981 mho/m; ε_r = 56.8; ρ = 1000 kg/m^3
Phantom section: Flat Section ; Measurement SW: DASY4, V4.7 Build 71; Postprocessing SW: SEMCAD, V1.8 Build 184

DASY4 Configuration:
- Probe: ES3DV3 - SN3161; ConvF(5.86, 5.86, 5.86); Calibrated: 2011-03-17
- Sensor-Surface: 4mm (Mechanical Surface Detection)
- Electronics: DAE3 Sn446; Calibrated: 2010-09-21
- Phantom: SAM 835/900 MHz; Type: SAM

WCDMA850 Hotspot Rear 4183/Area Scan (51x91x1): Measurement grid: dx=15mm, dy=15mm

Info: Interpolated medium parameters used for SAR evaluation.
Maximum value of SAR (interpolated) = 0.791 mW/g

WCDMA850 Hotspot Rear 4183/Zoom Scan (5x5x7)/Cube 0: Measurement grid: dx=8mm, dy=8mm, dz=5mm
Reference Value = 8.65 V/m; Power Drift = 0.014 dB
Peak SAR (extrapolated) = 1.02 W/kg
SAR(1 g) = 0.750 mW/g; SAR(10 g) = 0.533 mW/g

Info: Interpolated medium parameters used for SAR evaluation.
Maximum value of SAR (measured) = 0.791 mW/g

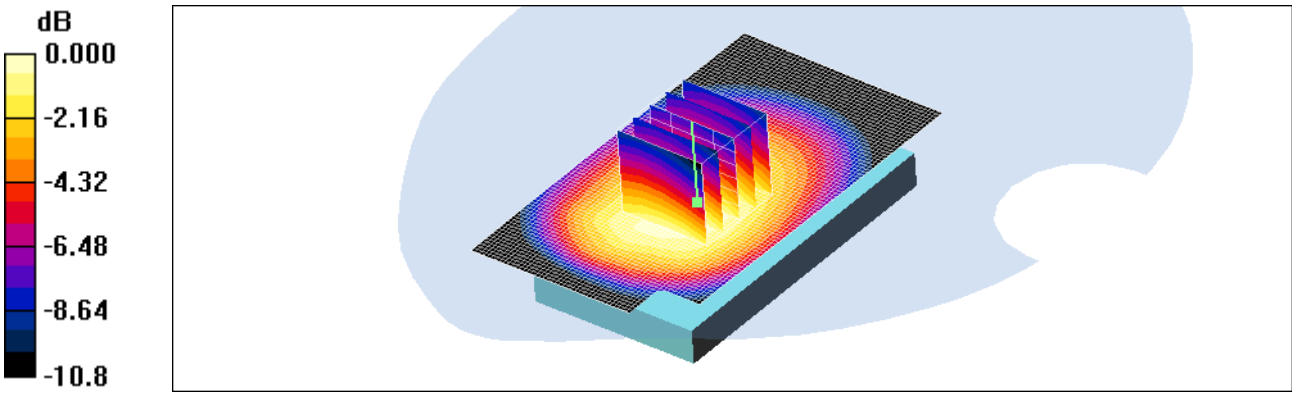

0 dB = 0.791mW/g

Test Laboratory: HCT CO., LTD
EUT Type: Cellular/PCS GSM/GPRS/EDGE/HSDPA Phone with Bluetooth and WLAN
Liquid Temperature: 21.2 ℃
Ambient Temperature: 21.4 ℃
Test Date: June 13, 2011

DUT: LG-P690g; Type: bar; Serial: side

Communication System: WCDMA850; Frequency: 836.6 MHz;Duty Cycle: 1:1
Medium parameters used (interpolated): f = 836.6 MHz; σ = 0.981 mho/m; ε_r = 56.8; ρ = 1000 kg/m^3
Phantom section: Flat Section ; Measurement SW: DASY4, V4.7 Build 71; Postprocessing SW: SEMCAD, V1.8 Build 184

DASY4 Configuration:
- Probe: ES3DV3 - SN3161; ConvF(5.86, 5.86, 5.86); Calibrated: 2011-03-17
- Sensor-Surface: 4mm (Mechanical Surface Detection)
- Electronics: DAE3 Sn446; Calibrated: 2010-09-21
- Phantom: SAM 835/900 MHz; Type: SAM

WCDMA850 Hotspot Left 4183/Area Scan (31x91x1): Measurement grid: dx=15mm, dy=15mm

Info: Interpolated medium parameters used for SAR evaluation.
Maximum value of SAR (interpolated) = 0.328 mW/g

WCDMA850 Hotspot Left 4183/Zoom Scan (5x5x7)/Cube 0: Measurement grid: dx=8mm, dy=8mm, dz=5mm
Reference Value = 9.47 V/m; Power Drift = 0.015 dB
Peak SAR (extrapolated) = 0.440 W/kg
SAR(1 g) = 0.312 mW/g; SAR(10 g) = 0.212 mW/g

Info: Interpolated medium parameters used for SAR evaluation.
Maximum value of SAR (measured) = 0.334 mW/g

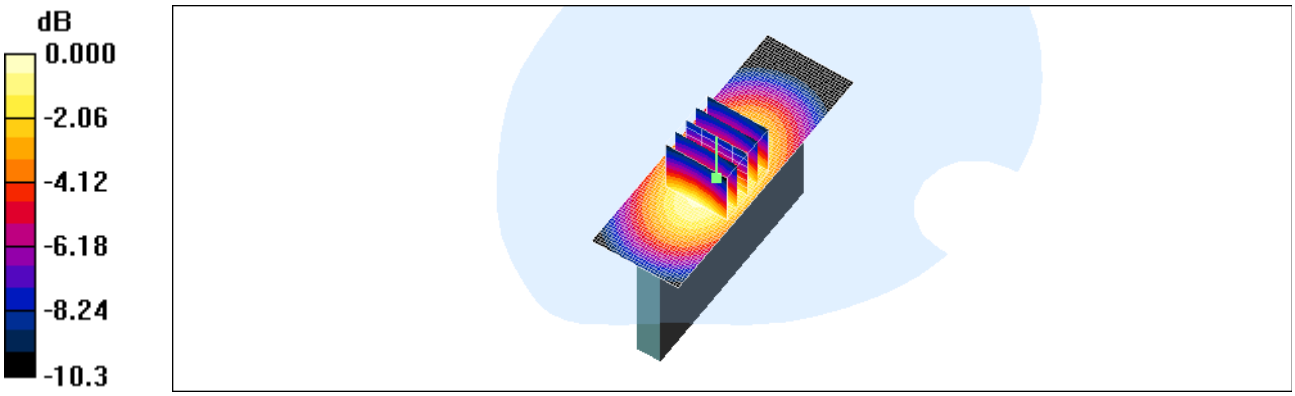

0 dB = 0.334mW/g

Test Laboratory: HCT CO., LTD
EUT Type: Cellular/PCS GSM/GPRS/EDGE/HSDPA Phone with Bluetooth and WLAN
Liquid Temperature: 21.2 ℃
Ambient Temperature: 21.4 ℃
Test Date: June 13, 2011

DUT: LG-P690g; Type: bar; Serial: side

Communication System: WCDMA850; Frequency: 836.6 MHz;Duty Cycle: 1:1
Medium parameters used (interpolated): f = 836.6 MHz; σ = 0.981 mho/m; ε_r = 56.8; ρ = 1000 kg/m^3
Phantom section: Flat Section ; Measurement SW: DASY4, V4.7 Build 71; Postprocessing SW: SEMCAD, V1.8 Build 184

DASY4 Configuration:
- Probe: ES3DV3 - SN3161; ConvF(5.86, 5.86, 5.86); Calibrated: 2011-03-17
- Sensor-Surface: 4mm (Mechanical Surface Detection)
- Electronics: DAE3 Sn446; Calibrated: 2010-09-21
- Phantom: SAM 835/900 MHz; Type: SAM

WCDMA850 Hotspot Right 4183/Area Scan (31x91x1): Measurement grid: dx=15mm, dy=15mm

Info: Interpolated medium parameters used for SAR evaluation.
Maximum value of SAR (interpolated) = 0.358 mW/g

WCDMA850 Hotspot Right 4183/Zoom Scan (5x5x7)/Cube 0: Measurement grid: dx=8mm, dy=8mm, dz=5mm
Reference Value = 10.5 V/m; Power Drift = 0.004 dB
Peak SAR (extrapolated) = 0.480 W/kg
SAR(1 g) = 0.343 mW/g; SAR(10 g) = 0.235 mW/g

Info: Interpolated medium parameters used for SAR evaluation.
Maximum value of SAR (measured) = 0.367 mW/g

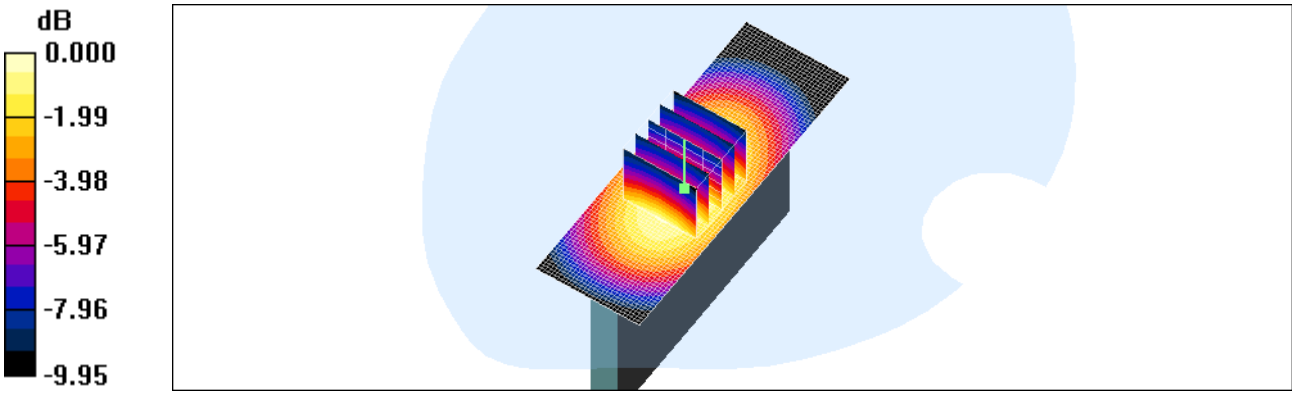

0 dB = 0.367mW/g

Test Laboratory: HCT CO., LTD
EUT Type: Cellular/PCS GSM/GPRS/EDGE/HSDPA Phone with Bluetooth and WLAN
Liquid Temperature: 21.2 ℃
Ambient Temperature: 21.4 ℃
Test Date: June 13, 2011

DUT: LG-P690g; Type: bar; Serial: Top

Communication System: WCDMA850; Frequency: 836.6 MHz;Duty Cycle: 1:1
Medium parameters used (interpolated): f = 836.6 MHz; σ = 0.981 mho/m; ε_r = 56.8; ρ = 1000 kg/m^3
Phantom section: Flat Section ; Measurement SW: DASY4, V4.7 Build 71; Postprocessing SW: SEMCAD, V1.8 Build 184

DASY4 Configuration:
- Probe: ES3DV3 - SN3161; ConvF(5.86, 5.86, 5.86); Calibrated: 2011-03-17
- Sensor-Surface: 4mm (Mechanical Surface Detection)
- Electronics: DAE3 Sn446; Calibrated: 2010-09-21
- Phantom: SAM 835/900 MHz; Type: SAM

WCDMA850 Hotspot Bottom 4183/Area Scan (31x61x1): Measurement grid: dx=15mm, dy=15mm

Info: Interpolated medium parameters used for SAR evaluation.
Maximum value of SAR (interpolated) = 0.056 mW/g

WCDMA850 Hotspot Bottom 4183/Zoom Scan (5x5x7)/Cube 0: Measurement grid: dx=8mm, dy=8mm, dz=5mm
Reference Value = 6.97 V/m; Power Drift = -0.064 dB
Peak SAR (extrapolated) = 0.079 W/kg
SAR(1 g) = 0.051 mW/g; SAR(10 g) = 0.034 mW/g

Info: Interpolated medium parameters used for SAR evaluation.
Maximum value of SAR (measured) = 0.055 mW/g

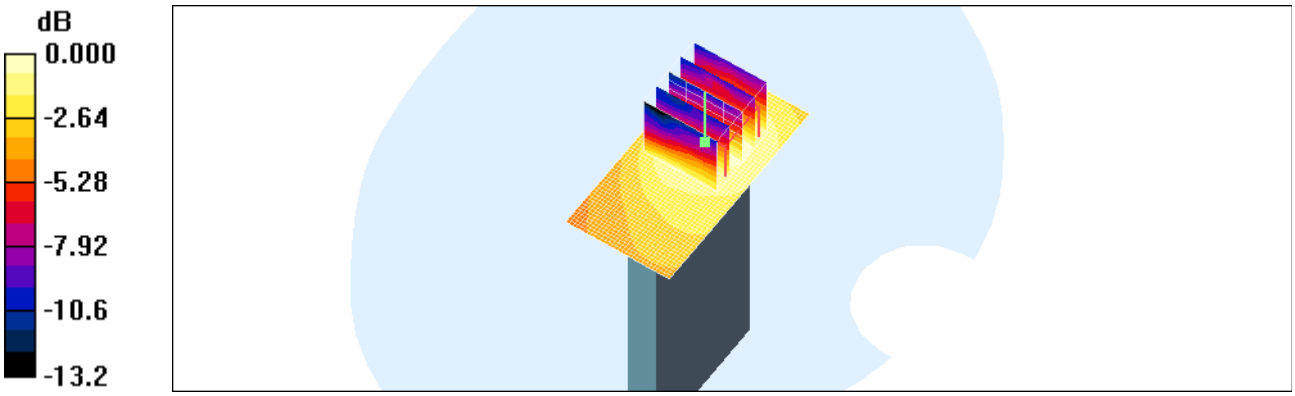

0 dB = 0.055mW/g

Test Laboratory: HCT CO., LTD
EUT Type: Cellular/PCS GSM/GPRS/EDGE/HSDPA Phone with Bluetooth and WLAN
Liquid Temperature: 21.1 ℃
Ambient Temperature: 21.3 ℃
Test Date: June 14, 2011

DUT: LG-P690g; Type: bar; Serial: #1

Communication System: WCDMA1900; Frequency: 1880 MHz;Duty Cycle: 1:1
Medium parameters used: f = 1880 MHz; σ = 1.54 mho/m; ε_r = 53; ρ = 1000 kg/m^3
Phantom section: Flat Section ; Measurement SW: DASY4, V4.7 Build 71; Postprocessing SW: SEMCAD, V1.8 Build 184

DASY4 Configuration:
- Probe: ES3DV3 - SN3161; ConvF(4.49, 4.49, 4.49); Calibrated: 2011-03-17
- Sensor-Surface: 4mm (Mechanical Surface Detection)
- Electronics: DAE3 Sn446; Calibrated: 2010-09-21
- Phantom: SAM 1800/1900 MHz; Type: SAM

WCDMA1900 Hotspot Front 9400/Area Scan (51x91x1): Measurement grid: dx=15mm, dy=15mm
Maximum value of SAR (interpolated) = 0.743 mW/g

WCDMA1900 Hotspot Front 9400/Zoom Scan (5x5x7)/Cube 0: Measurement grid: dx=8mm, dy=8mm, dz=5mm
Reference Value = 11.0 V/m; Power Drift = -0.007 dB
Peak SAR (extrapolated) = 1.10 W/kg
SAR(1 g) = 0.648 mW/g; SAR(10 g) = 0.368 mW/g
Maximum value of SAR (measured) = 0.716 mW/g

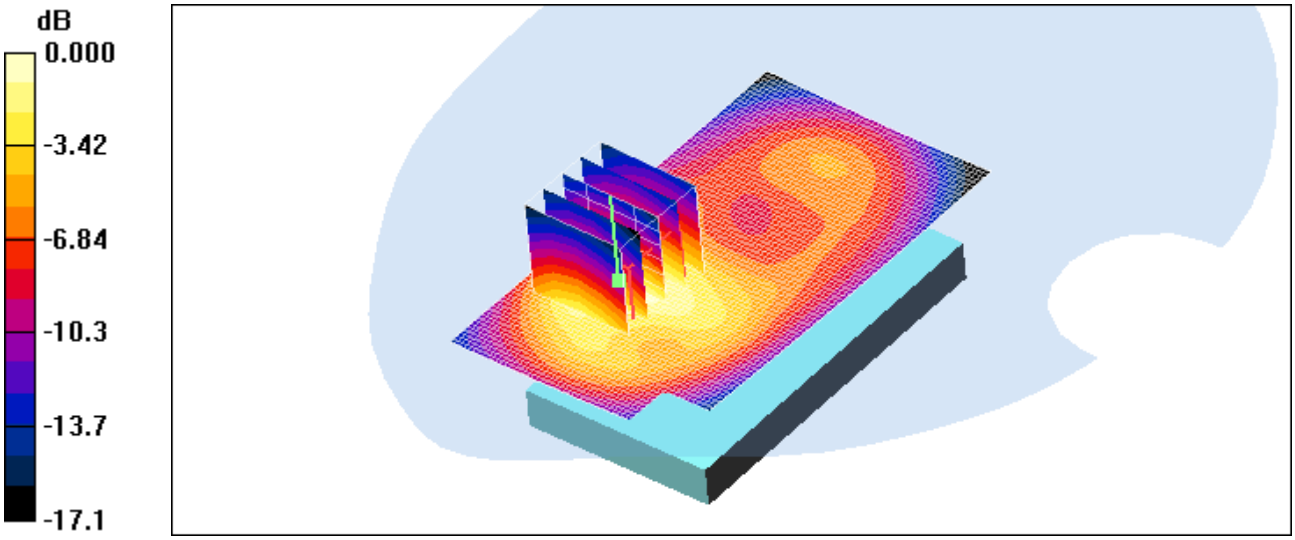

0 dB = 0.716mW/g

Test Laboratory: HCT CO., LTD
EUT Type: Cellular/PCS GSM/GPRS/EDGE/HSDPA Phone with Bluetooth and WLAN
Liquid Temperature: 21.1 ℃
Ambient Temperature: 21.3 ℃
Test Date: June 14, 2011

DUT: LG-P690g; Type: bar; Serial: #1

Communication System: WCDMA1900; Frequency: 1880 MHz;Duty Cycle: 1:1
Medium parameters used: f = 1880 MHz; σ = 1.54 mho/m; ε_r = 53; ρ = 1000 kg/m^3
Phantom section: Flat Section ; Measurement SW: DASY4, V4.7 Build 71; Postprocessing SW: SEMCAD, V1.8 Build 184

DASY4 Configuration:
- Probe: ES3DV3 - SN3161; ConvF(4.49, 4.49, 4.49); Calibrated: 2011-03-17
- Sensor-Surface: 4mm (Mechanical Surface Detection)
- Electronics: DAE3 Sn446; Calibrated: 2010-09-21
- Phantom: SAM 1800/1900 MHz; Type: SAM

WCDMA1900 Hotspot Rear 9400/Area Scan (51x91x1): Measurement grid: dx=15mm, dy=15mm
Maximum value of SAR (interpolated) = 0.832 mW/g

WCDMA1900 Hotspot Rear 9400/Zoom Scan (5x5x7)/Cube 0: Measurement grid: dx=8mm, dy=8mm, dz=5mm
Reference Value = 10.1 V/m; Power Drift = -0.172 dB
Peak SAR (extrapolated) = 1.27 W/kg
SAR(1 g) = 0.749 mW/g; SAR(10 g) = 0.430 mW/g
Maximum value of SAR (measured) = 0.809 mW/g

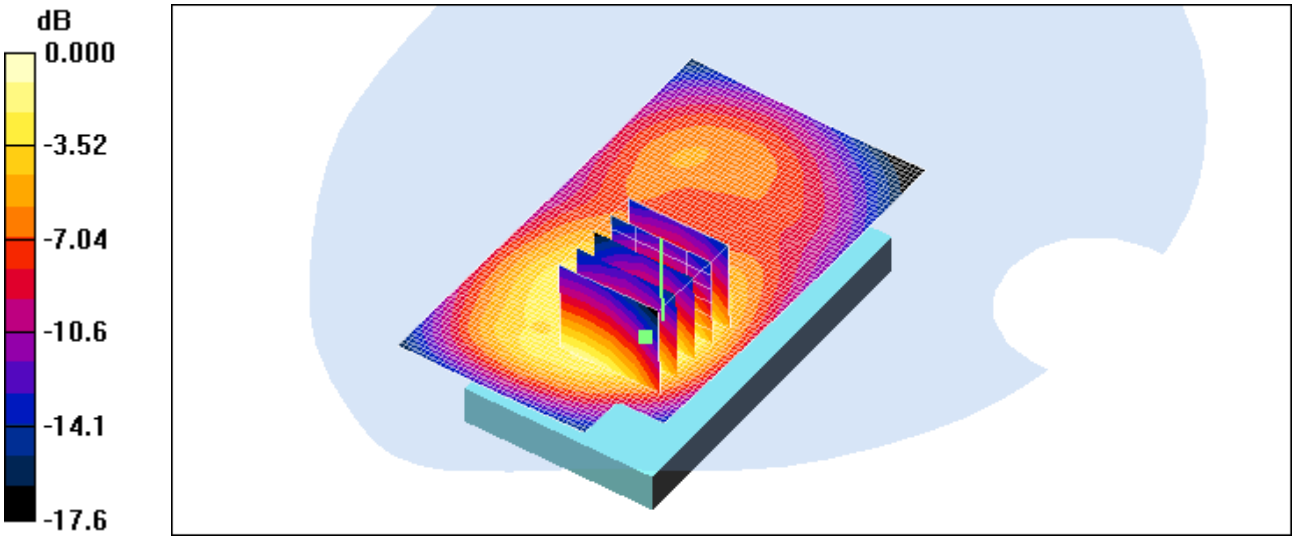

0 dB = 0.809mW/g

Test Laboratory: HCT CO., LTD
EUT Type: Cellular/PCS GSM/GPRS/EDGE/HSDPA Phone with Bluetooth and WLAN
Liquid Temperature: 21.1 ℃
Ambient Temperature: 21.3 ℃
Test Date: June 14, 2011

DUT: LG-P690g; Type: bar; Serial: side

Communication System: WCDMA1900; Frequency: 1880 MHz;Duty Cycle: 1:1
Medium parameters used: f = 1880 MHz; σ = 1.54 mho/m; ε_r = 53; ρ = 1000 kg/m^3
Phantom section: Flat Section ; Measurement SW: DASY4, V4.7 Build 71; Postprocessing SW: SEMCAD, V1.8 Build 184

DASY4 Configuration:
- Probe: ES3DV3 - SN3161; ConvF(4.49, 4.49, 4.49); Calibrated: 2011-03-17
- Sensor-Surface: 4mm (Mechanical Surface Detection)
- Electronics: DAE3 Sn446; Calibrated: 2010-09-21
- Phantom: 1800/1900 Phantom; Type: SAM

WCDMA1900 Hotspot Left side 9400/Area Scan (31x91x1): Measurement grid: dx=15mm, dy=15mm
Maximum value of SAR (interpolated) = 0.225 mW/g

WCDMA1900 Hotspot Left side 9400/Zoom Scan (5x5x7)/Cube 0: Measurement grid: dx=8mm, dy=8mm, dz=5mm
Reference Value = 5.49 V/m; Power Drift = 0.011 dB
Peak SAR (extrapolated) = 0.300 W/kg
SAR(1 g) = 0.199 mW/g; SAR(10 g) = 0.124 mW/g
Maximum value of SAR (measured) = 0.216 mW/g

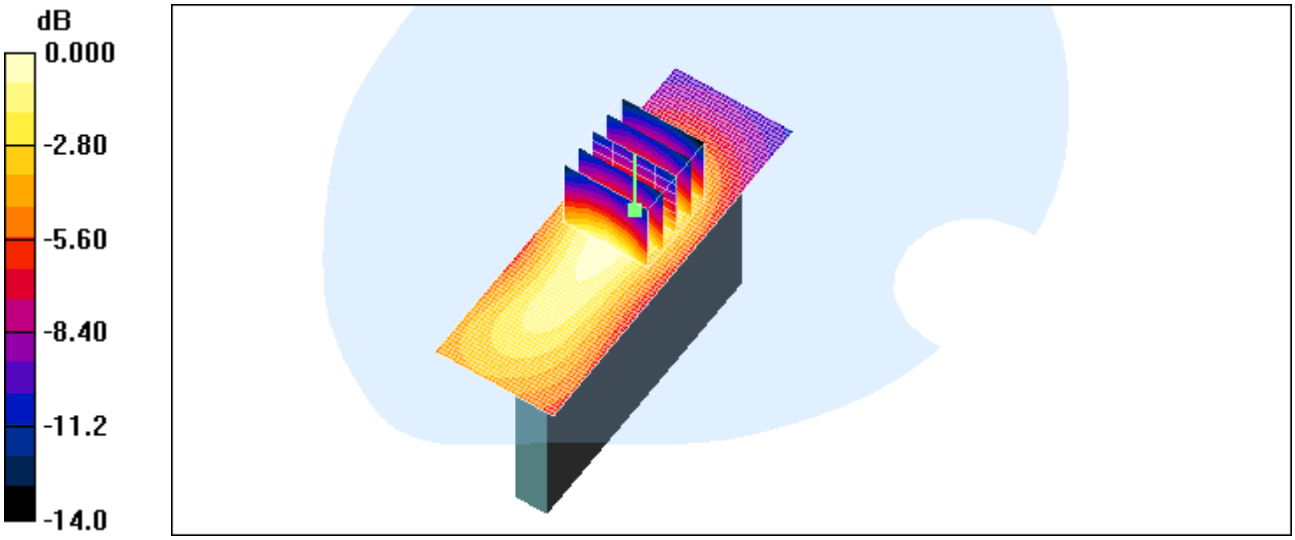

0 dB = 0.216mW/g

Test Laboratory: HCT CO., LTD
EUT Type: Cellular/PCS GSM/GPRS/EDGE/HSDPA Phone with Bluetooth and WLAN
Liquid Temperature: 21.1 ℃
Ambient Temperature: 21.3 ℃
Test Date: June 14, 2011

DUT: LG-P690g; Type: bar; Serial: side

Communication System: WCDMA1900; Frequency: 1880 MHz;Duty Cycle: 1:1
Medium parameters used: f = 1880 MHz; σ = 1.54 mho/m; ε_r = 53; ρ = 1000 kg/m^3
Phantom section: Flat Section ; Measurement SW: DASY4, V4.7 Build 71; Postprocessing SW: SEMCAD, V1.8 Build 184

DASY4 Configuration:
- Probe: ES3DV3 - SN3161; ConvF(4.49, 4.49, 4.49); Calibrated: 2011-03-17
- Sensor-Surface: 4mm (Mechanical Surface Detection)
- Electronics: DAE3 Sn446; Calibrated: 2010-09-21
- Phantom: 1800/1900 Phantom; Type: SAM

WCDMA1900 Hotspot Right 9400/Area Scan (31x91x1): Measurement grid: dx=15mm, dy=15mm
Maximum value of SAR (interpolated) = 0.186 mW/g

WCDMA1900 Hotspot Right 9400/Zoom Scan (5x5x7)/Cube 0: Measurement grid: dx=8mm, dy=8mm, dz=5mm
Reference Value = 4.52 V/m; Power Drift = -0.025 dB
Peak SAR (extrapolated) = 0.254 W/kg
SAR(1 g) = 0.170 mW/g; SAR(10 g) = 0.104 mW/g
Maximum value of SAR (measured) = 0.185 mW/g

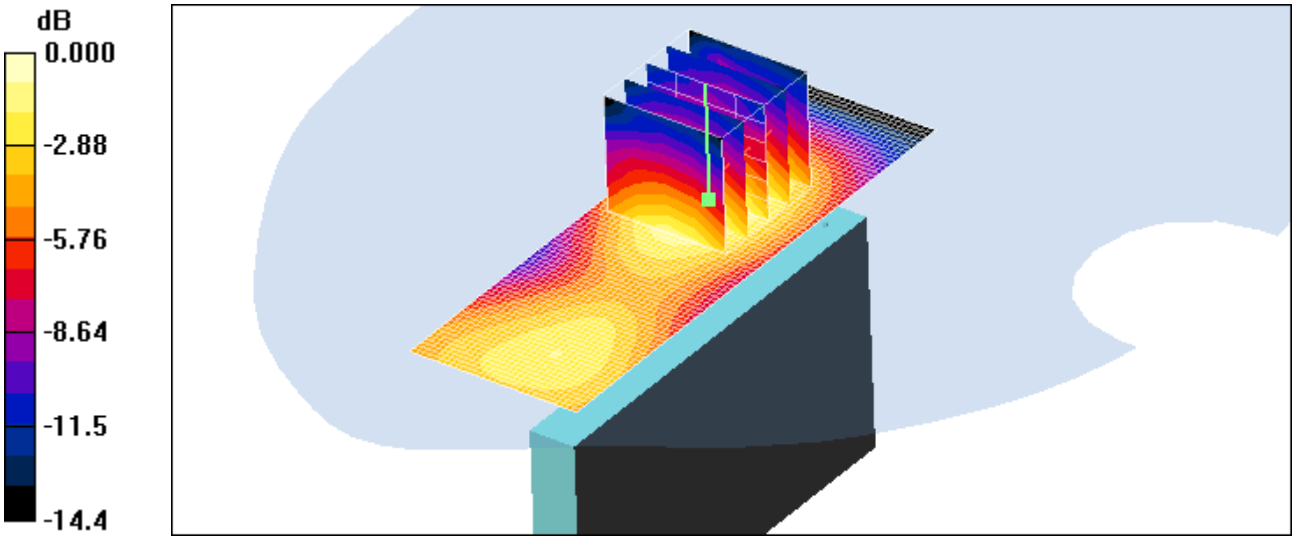

0 dB = 0.185mW/g

Test Laboratory: HCT CO., LTD
EUT Type: Cellular/PCS GSM/GPRS/EDGE/HSDPA Phone with Bluetooth and WLAN
Liquid Temperature: 21.1 ℃
Ambient Temperature: 21.3 ℃
Test Date: June 14, 2011

DUT: LG-P690g; Type: bar; Serial: top

Communication System: WCDMA1900; Frequency: 1880 MHz;Duty Cycle: 1:1
Medium parameters used: f = 1880 MHz; σ = 1.54 mho/m; ε_r = 53; ρ = 1000 kg/m^3
Phantom section: Flat Section ; Measurement SW: DASY4, V4.7 Build 71; Postprocessing SW: SEMCAD, V1.8 Build 184

DASY4 Configuration:
- Probe: ES3DV3 - SN3161; ConvF(4.49, 4.49, 4.49); Calibrated: 2011-03-17
- Sensor-Surface: 4mm (Mechanical Surface Detection)
- Electronics: DAE3 Sn446; Calibrated: 2010-09-21
- Phantom: 1800/1900 Phantom; Type: SAM

WCDMA1900 Hotspot Bottom 9400/Area Scan (31x61x1): Measurement grid: dx=15mm, dy=15mm
Maximum value of SAR (interpolated) = 0.478 mW/g

WCDMA1900 Hotspot Bottom 9400/Zoom Scan (5x5x7)/Cube 0: Measurement grid: dx=8mm, dy=8mm, dz=5mm
Reference Value = 17.7 V/m; Power Drift = -0.061 dB
Peak SAR (extrapolated) = 0.684 W/kg
SAR(1 g) = 0.438 mW/g; SAR(10 g) = 0.257 mW/g
Maximum value of SAR (measured) = 0.490 mW/g

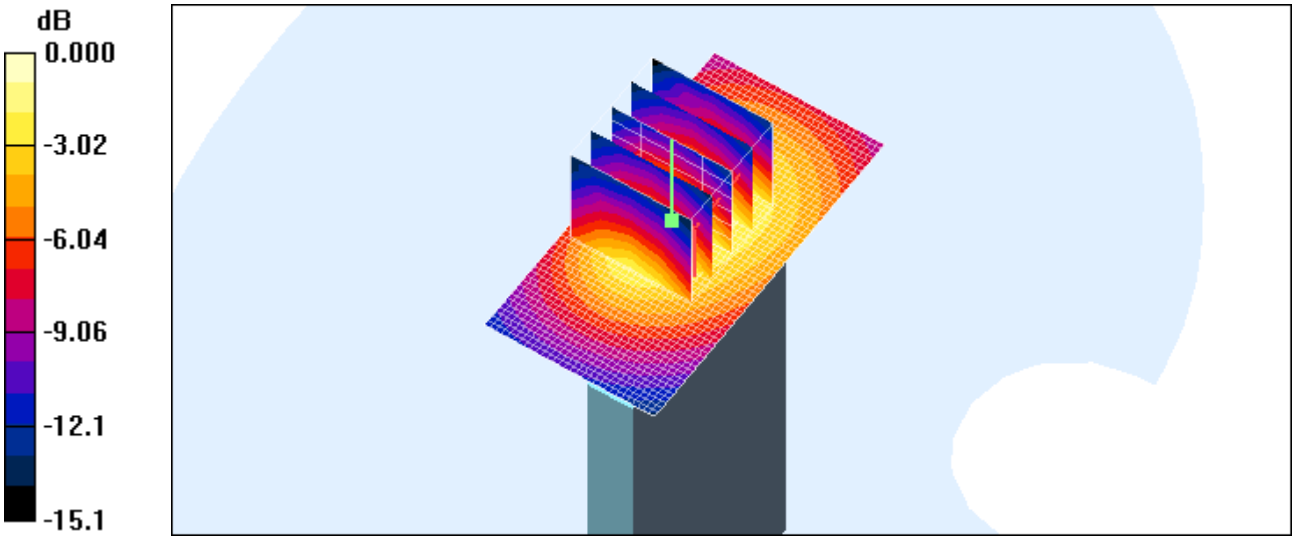

0 dB = 0.490mW/g

Test Laboratory: HCT CO., LTD
EUT Type: Cellular/PCS GSM/GPRS/EDGE/HSDPA Phone with Bluetooth and WLAN
Liquid Temperature: 21.2 ℃
Ambient Temperature: 21.4 ℃
Test Date: June 13, 2011

DUT: LG-P690g; Type: bar; Serial: #1

Communication System: 2450MHz FCC; Frequency: 2462 MHz;Duty Cycle: 1:1
Medium parameters used (interpolated): f = 2462 MHz; σ = 1.96 mho/m; ε_r = 51.8; ρ = 1000 kg/m^3
Phantom section: Flat Section ; Measurement SW: DASY4, V4.7 Build 71; Postprocessing SW: SEMCAD, V1.8 Build 184

DASY4 Configuration:
- Probe: ES3DV3 - SN3161; ConvF(4.03, 4.03, 4.03); Calibrated: 2011-03-17
- Sensor-Surface: 4mm (Mechanical Surface Detection)
- Electronics: DAE3 Sn446; Calibrated: 2010-09-21
- Phantom: 800/900 Phantom; Type: SAM

802.11b Hotspot Front 11/Area Scan (61x91x1): Measurement grid: dx=15mm, dy=15mm

Info: Interpolated medium parameters used for SAR evaluation.
Maximum value of SAR (interpolated) = 0.045 mW/g

802.11b Hotspot Front 11/Zoom Scan (5x5x7)/Cube 0: Measurement grid: dx=8mm, dy=8mm, dz=5mm
Reference Value = 1.49 V/m; Power Drift = -0.063 dB
Peak SAR (extrapolated) = 0.315 W/kg
SAR(1 g) = 0.056 mW/g; SAR(10 g) = 0.023 mW/g
Maximum value of SAR (measured) = 0.246 mW/g

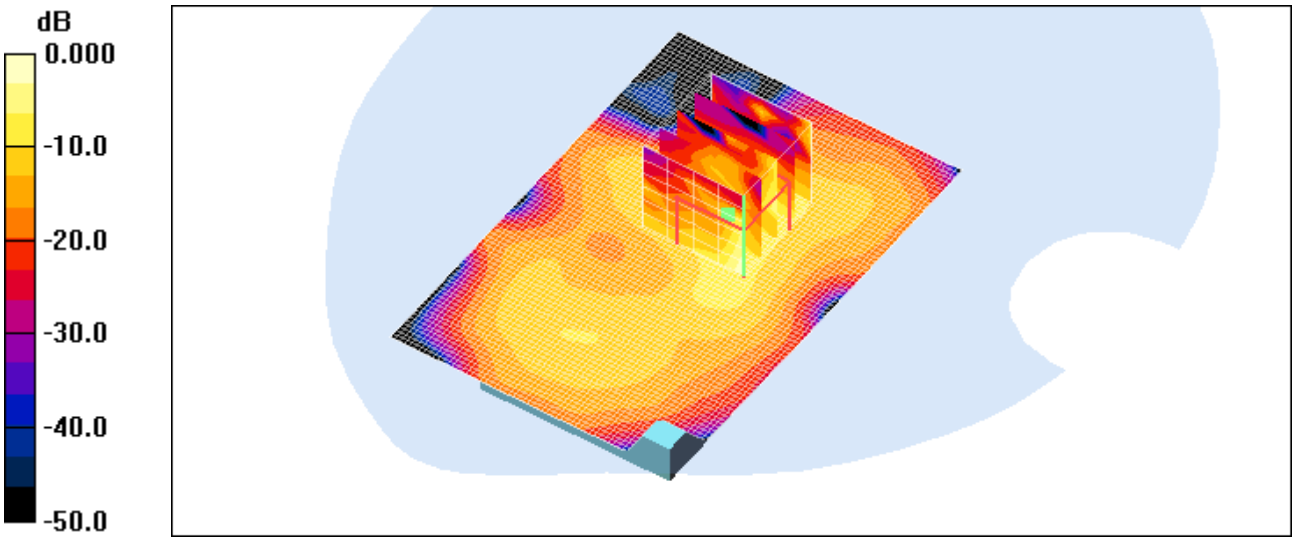

0 dB = 0.246mW/g

Test Laboratory: HCT CO., LTD
EUT Type: Cellular/PCS GSM/GPRS/EDGE/HSDPA Phone with Bluetooth and WLAN
Liquid Temperature: 21.2 ℃
Ambient Temperature: 21.4 ℃
Test Date: June 13, 2011

DUT: LG-P690g; Type: bar; Serial: #1

Communication System: 2450MHz FCC; Frequency: 2462 MHz;Duty Cycle: 1:1
Medium parameters used (interpolated): f = 2462 MHz; σ = 1.96 mho/m; ε_r = 51.8; ρ = 1000 kg/m^3
Phantom section: Flat Section ; Measurement SW: DASY4, V4.7 Build 71; Postprocessing SW: SEMCAD, V1.8 Build 184

DASY4 Configuration:
- Probe: ES3DV3 - SN3161; ConvF(4.03, 4.03, 4.03); Calibrated: 2011-03-17
- Sensor-Surface: 4mm (Mechanical Surface Detection)
- Electronics: DAE3 Sn446; Calibrated: 2010-09-21
- Phantom: 800/900 Phantom; Type: SAM

802.11b Hotspot Rear 11/Area Scan (61x91x1): Measurement grid: dx=15mm, dy=15mm

Info: Interpolated medium parameters used for SAR evaluation.

802.11b Hotspot Rear 11/Zoom Scan (5x5x7)/Cube 0: Measurement grid: dx=8mm, dy=8mm, dz=5mm
Reference Value = 1.72 V/m; Power Drift = 0.08 dB
Peak SAR (extrapolated) = 0.268 W/kg
SAR(1 g) = 0.082 mW/g; SAR(10 g) = 0.033 mW/g

Info: Interpolated medium parameters used for SAR evaluation.
Maximum value of SAR (measured) = 0.088 mW/g

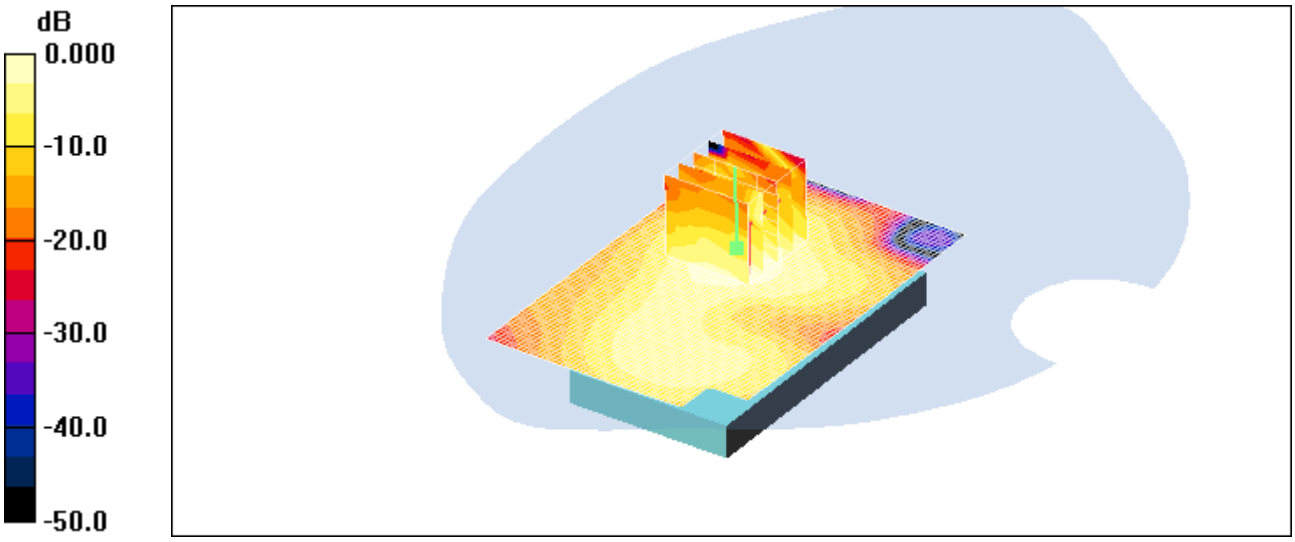

0 dB = 0.088mW/g

Test Laboratory: HCT CO., LTD
EUT Type: Cellular/PCS GSM/GPRS/EDGE/HSDPA Phone with Bluetooth and WLAN
Liquid Temperature: 21.2 ℃
Ambient Temperature: 21.4 ℃
Test Date: June 13, 2011

DUT: LG-P690g; Type: bar; Serial: side

Communication System: 2450MHz FCC; Frequency: 2462 MHz;Duty Cycle: 1:1
Medium parameters used (interpolated): f = 2462 MHz; σ = 1.96 mho/m; ε_r = 51.8; ρ = 1000 kg/m^3
Phantom section: Flat Section ; Measurement SW: DASY4, V4.7 Build 71; Postprocessing SW: SEMCAD, V1.8 Build 184

DASY4 Configuration:
- Probe: ES3DV3 - SN3161; ConvF(4.03, 4.03, 4.03); Calibrated: 2011-03-17
- Sensor-Surface: 4mm (Mechanical Surface Detection)
- Electronics: DAE3 Sn446; Calibrated: 2010-09-21
- Phantom: 800/900 Phantom; Type: SAM

802.11b Hotspot Right 11/Area Scan (31x91x1): Measurement grid: dx=15mm, dy=15mm

Info: Interpolated medium parameters used for SAR evaluation.
Maximum value of SAR (interpolated) = 0.369 mW/g

802.11b Hotspot Right 11/Zoom Scan (5x5x7)/Cube 0: Measurement grid: dx=8mm, dy=8mm, dz=5mm
Reference Value = 4.17 V/m; Power Drift = -0.096 dB
Peak SAR (extrapolated) = 0.128 W/kg
SAR(1 g) = 0.075 mW/g; SAR(10 g) = 0.034 mW/g

Maximum value of SAR (measured) = 0.087 mW/g

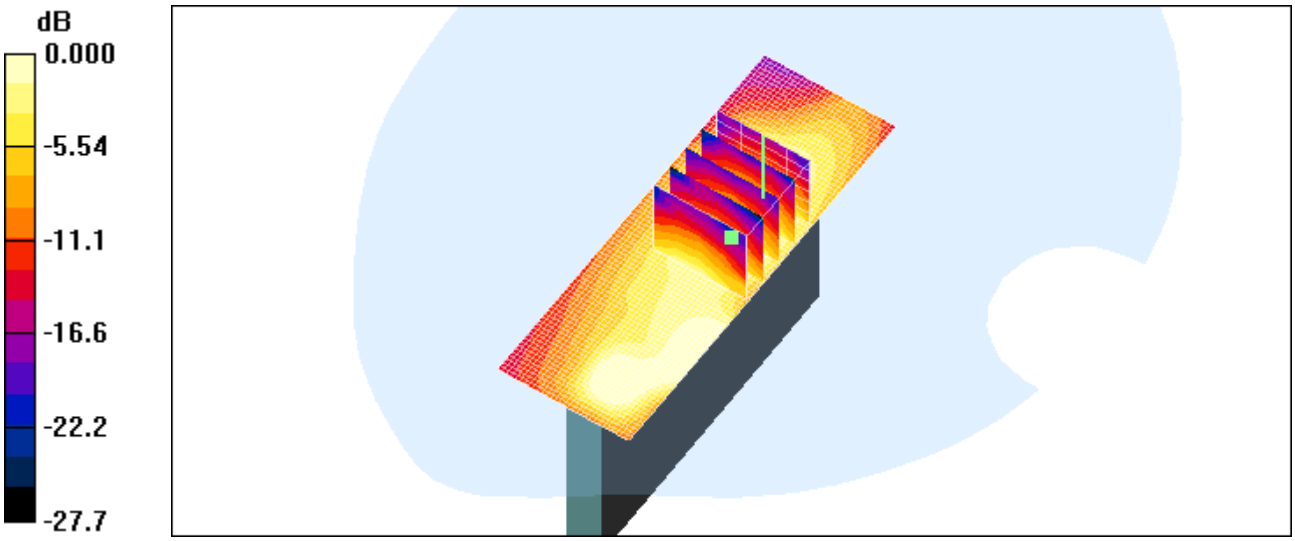

0 dB = 0.087mW/g

Test Laboratory: HCT CO., LTD
EUT Type: Cellular/PCS GSM/GPRS/EDGE/HSDPA Phone with Bluetooth and WLAN
Liquid Temperature: 21.2 ℃
Ambient Temperature: 21.4 ℃
Test Date: June 13, 2011

DUT: LG-P690g; Type: bar; Serial: top

Communication System: 2450MHz FCC; Frequency: 2462 MHz;Duty Cycle: 1:1
Medium parameters used (interpolated): f = 2462 MHz; σ = 1.96 mho/m; ε_r = 51.8; ρ = 1000 kg/m^3
Phantom section: Flat Section ; Measurement SW: DASY4, V4.7 Build 71; Postprocessing SW: SEMCAD, V1.8 Build 184

DASY4 Configuration:
- Probe: ES3DV3 - SN3161; ConvF(4.03, 4.03, 4.03); Calibrated: 2011-03-17
- Sensor-Surface: 4mm (Mechanical Surface Detection)
- Electronics: DAE3 Sn446; Calibrated: 2010-09-21
- Phantom: 800/900 Phantom; Type: SAM

WIFi2450MHz Hotspot Top 11/Area Scan (31x61x1): Measurement grid: dx=15mm, dy=15mm

Info: Interpolated medium parameters used for SAR evaluation.
Maximum value of SAR (interpolated) = 0.157 mW/g

WIFi2450MHz Hotspot Top 11/Zoom Scan (5x5x7)/Cube 0: Measurement grid: dx=8mm, dy=8mm, dz=5mm
Reference Value = 1.15 V/m; Power Drift = 0.091 dB
Peak SAR (extrapolated) = 0.021 W/kg
SAR(1 g) = 0.00209 mW/g; SAR(10 g) = 0.000523 mW/g
Maximum value of SAR (measured) = 0.021 mW/g

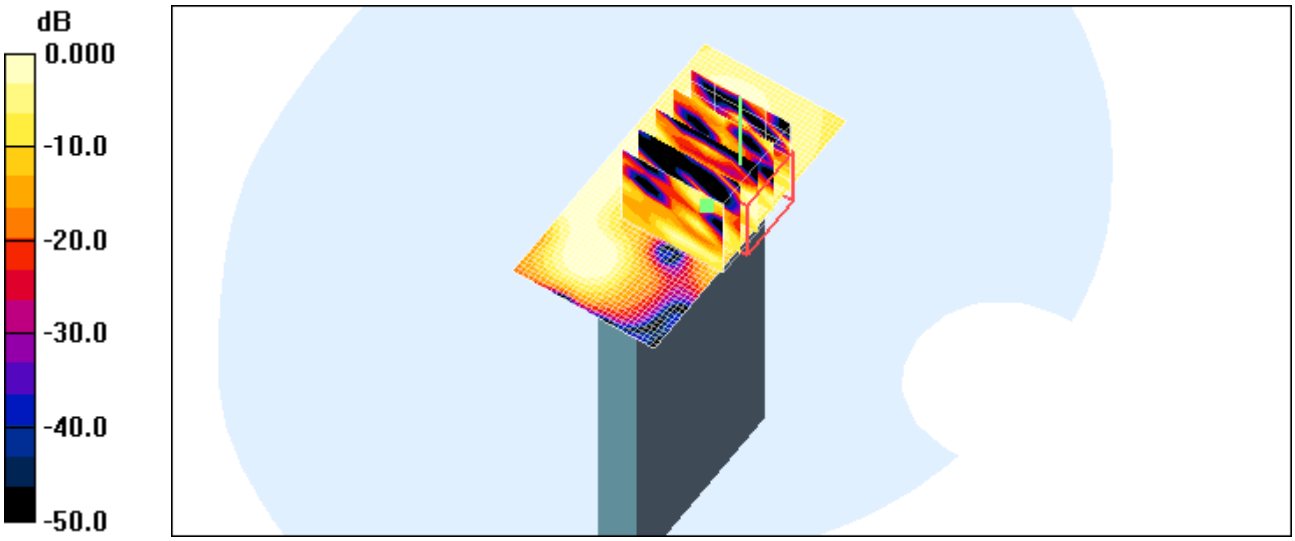

0 dB = 0.021mW/g

Test Laboratory: HCT CO., LTD
EUT Type: Cellular/PCS GSM/GPRS/EDGE/HSDPA Phone with Bluetooth and WLAN
Liquid Temperature: 21.2 ℃
Ambient Temperature: 21.4 ℃
Test Date: June 13, 2011

DUT: LG-P690g; Type: bar; Serial: #1

Communication System: GSM 850; Frequency: 836.6 MHz;Duty Cycle: 1:8.3
Medium parameters used (interpolated): f = 836.6 MHz; σ = 0.858 mho/m; ε_r = 41.8; ρ = 1000 kg/m^3
Phantom section: Right Section ; Measurement SW: DASY4, V4.7 Build 71; Postprocessing SW: SEMCAD, V1.8 Build 184

DASY4 Configuration:
- Probe: ES3DV3 - SN3161; ConvF(5.84, 5.84, 5.84); Calibrated: 2011-03-17
- Sensor-Surface: 4mm (Mechanical Surface Detection)
- Electronics: DAE3 Sn446; Calibrated: 2010-09-21
- Phantom: SAM 835/900 MHz; Type: SAM

Right touch 190/Area Scan (51x81x1): Measurement grid: dx=15mm, dy=15mm

Info: Interpolated medium parameters used for SAR evaluation.
Maximum value of SAR (interpolated) = 0.331 mW/g

Right touch 190/Zoom Scan (5x5x7)/Cube 0: Measurement grid: dx=8mm, dy=8mm, dz=5mm
Reference Value = 4.69 V/m; Power Drift = 0.014 dB
Peak SAR (extrapolated) = 0.415 W/kg
SAR(1 g) = 0.311 mW/g; SAR(10 g) = 0.217 mW/g

Info: Interpolated medium parameters used for SAR evaluation.
Maximum value of SAR (measured) = 0.332 mW/g

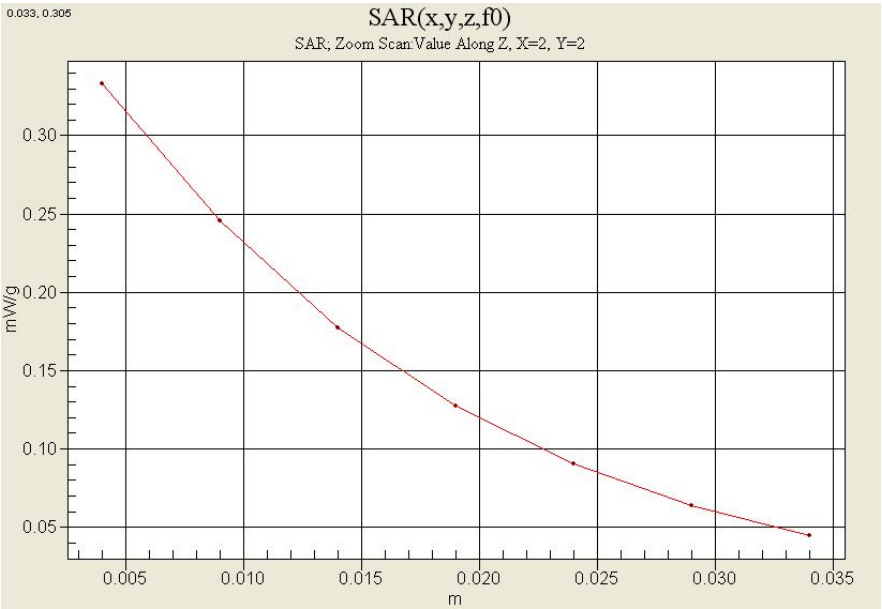

Test Laboratory: HCT CO., LTD

EUT Type: Cellular/PCS GSM/GPRS/EDGE/HSDPA Phone with Bluetooth and WLAN

Liquid Temperature: 21.2 ℃

Ambient Temperature: 21.4 ℃

Test Date: June 13, 2011

DUT: LG-P690g; Type: bar; Serial: #1

Communication System: GSM 850; Frequency: 848.8 MHz;Duty Cycle: 1:2.075
Medium parameters used (interpolated): f = 848.8 MHz; σ = 0.991 mho/m; ε_r = 56.7; ρ = 1000 kg/m^3
Phantom section: Flat Section ; Measurement SW: DASY4, V4.7 Build 71; Postprocessing SW: SEMCAD, V1.8 Build 184

DASY4 Configuration:
- Probe: ES3DV3 - SN3161; ConvF(5.86, 5.86, 5.86); Calibrated: 2011-03-17
- Sensor-Surface: 4mm (Mechanical Surface Detection)
- Electronics: DAE3 Sn446; Calibrated: 2010-09-21
- Phantom: SAM 835/900 MHz; Type: SAM

GSM850 Hotspot Rear 251/Area Scan (51x91x1): Measurement grid: dx=15mm, dy=15mm
Maximum value of SAR (interpolated) = 1.08 mW/g

GSM850 Hotspot Rear 251/Zoom Scan (5x5x7)/Cube 0: Measurement grid: dx=8mm, dy=8mm, dz=5mm
Reference Value = 12.9 V/m; Power Drift = 0.008 dB
Peak SAR (extrapolated) = 1.28 W/kg
SAR(1 g) = 1 mW/g; SAR(10 g) = 0.714 mW/g
Maximum value of SAR (measured) = 1.08 mW/g

GSM850 Hotspot Rear 251/Zoom Scan (5x5x7)/Cube 1: Measurement grid: dx=8mm, dy=8mm, dz=5mm
Reference Value = 12.9 V/m; Power Drift = 0.008 dB
Peak SAR (extrapolated) = 1.37 W/kg
SAR(1 g) = 0.912 mW/g; SAR(10 g) = 0.582 mW/g
Maximum value of SAR (measured) = 1.05 mW/g

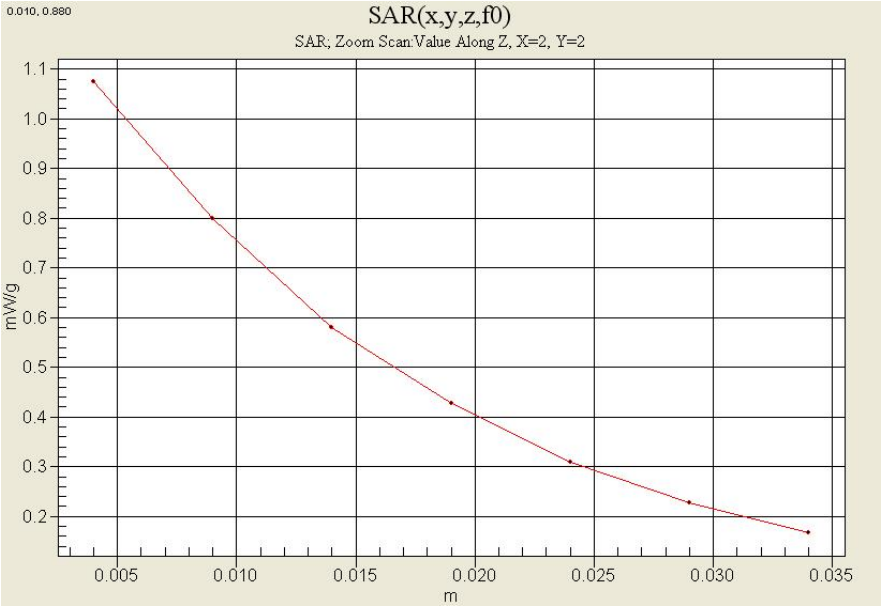

Test Laboratory: HCT CO., LTD
EUT Type: Cellular/PCS GSM/GPRS/EDGE/HSDPA Phone with Bluetooth and WLAN
Liquid Temperature: 21.1 ℃
Ambient Temperature: 21.3 ℃
Test Date: June 14, 2011

DUT: LG-P690g; Type: bar; Serial: #1

Communication System: GSM 1900; Frequency: 1880 MHz;Duty Cycle: 1:8.3
Medium parameters used: f = 1880 MHz; σ = 1.39 mho/m; ε_r = 39.1; ρ = 1000 kg/m^3
Phantom section: Left Section ; Measurement SW: DASY4, V4.7 Build 71; Postprocessing SW: SEMCAD, V1.8 Build 184

DASY4 Configuration:
- Probe: ES3DV3 - SN3161; ConvF(4.91, 4.91, 4.91); Calibrated: 2011-03-17
- Sensor-Surface: 4mm (Mechanical Surface Detection)
- Electronics: DAE3 Sn446; Calibrated: 2010-09-21
- Phantom: SAM 1800/1900 MHz; Type: SAM

Left touch 661/Area Scan (51x81x1): Measurement grid: dx=15mm, dy=15mm
Maximum value of SAR (interpolated) = 0.385 mW/g

Left touch 661/Zoom Scan (5x5x7)/Cube 0: Measurement grid: dx=8mm, dy=8mm, dz=5mm
Reference Value = 5.68 V/m; Power Drift = -0.042 dB
Peak SAR (extrapolated) = 0.635 W/kg
SAR(1 g) = 0.363 mW/g; SAR(10 g) = 0.196 mW/g
Maximum value of SAR (measured) = 0.400 mW/g

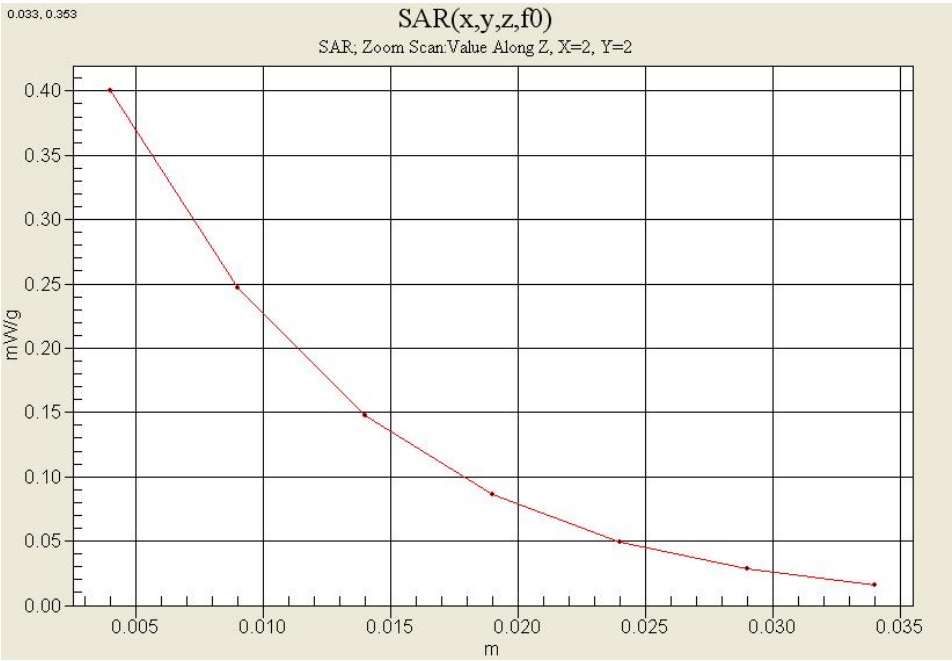

Test Laboratory: HCT CO., LTD
EUT Type: Cellular/PCS GSM/GPRS/EDGE/HSDPA Phone with Bluetooth and WLAN
Liquid Temperature: 21.1 ℃
Ambient Temperature: 21.3 ℃
Test Date: June 14, 2011

DUT: LG-P690g; Type: bar; Serial: #1

Communication System: GSM 1900; Frequency: 1880 MHz;Duty Cycle: 1:2.075
Medium parameters used: f = 1880 MHz; σ = 1.54 mho/m; ε_r = 53; ρ = 1000 kg/m^3
Phantom section: Flat Section ; Measurement SW: DASY4, V4.7 Build 71; Postprocessing SW: SEMCAD, V1.8 Build 184

DASY4 Configuration:
- Probe: ES3DV3 - SN3161; ConvF(4.49, 4.49, 4.49); Calibrated: 2011-03-17
- Sensor-Surface: 4mm (Mechanical Surface Detection)
- Electronics: DAE3 Sn446; Calibrated: 2010-09-21
- Phantom: 1800/1900 Phantom; Type: SAM

GSM1900 Hotspot Rear 661/Area Scan (51x91x1): Measurement grid: dx=15mm, dy=15mm
Maximum value of SAR (interpolated) = 0.405 mW/g

GSM1900 Hotspot Rear 661/Zoom Scan (5x5x7)/Cube 0: Measurement grid: dx=8mm, dy=8mm, dz=5mm
Reference Value = 6.77 V/m; Power Drift = 0.026 dB
Peak SAR (extrapolated) = 0.631 W/kg
SAR(1 g) = 0.383 mW/g; SAR(10 g) = 0.225 mW/g
Maximum value of SAR (measured) = 0.413 mW/g

Test Laboratory: HCT CO., LTD
EUT Type: Cellular/PCS GSM/GPRS/EDGE/HSDPA Phone with Bluetooth and WLAN
Liquid Temperature: 21.2 ℃
Ambient Temperature: 21.4 ℃
Test Date: June 13, 2011

DUT: LG-P690g; Type: bar; Serial: #1

Communication System: WCDMA850; Frequency: 836.6 MHz;Duty Cycle: 1:1
Medium parameters used (interpolated): f = 836.6 MHz; σ = 0.858 mho/m; ε_r = 41.8; ρ = 1000 kg/m^3
Phantom section: Right Section ; Measurement SW: DASY4, V4.7 Build 71; Postprocessing SW: SEMCAD, V1.8 Build 184

DASY4 Configuration:
- Probe: ES3DV3 - SN3161; ConvF(5.84, 5.84, 5.84); Calibrated: 2011-03-17
- Sensor-Surface: 4mm (Mechanical Surface Detection)
- Electronics: DAE3 Sn446; Calibrated: 2010-09-21
- Phantom: SAM 835/900 MHz; Type: SAM

Right touch 4183/Area Scan (51x81x1): Measurement grid: dx=15mm, dy=15mm

Info: Interpolated medium parameters used for SAR evaluation.
Maximum value of SAR (interpolated) = 0.367 mW/g

Right touch 4183/Zoom Scan (5x5x7)/Cube 0: Measurement grid: dx=8mm, dy=8mm, dz=5mm
Reference Value = 5.49 V/m; Power Drift = 0.106 dB
Peak SAR (extrapolated) = 0.465 W/kg
SAR(1 g) = 0.346 mW/g; SAR(10 g) = 0.241 mW/g

Info: Interpolated medium parameters used for SAR evaluation.
Maximum value of SAR (measured) = 0.367 mW/g

Test Laboratory:	HCT CO., LTD
EUT Type:	Cellular/PCS GSM/GPRS/EDGE/HSDPA Phone with Bluetooth and WLAN
Liquid Temperature:	21.2 ℃
Ambient Temperature:	21.4 ℃
Test Date:	June 13, 2011

DUT: LG-P690g; Type: bar; Serial: #1

Communication System: WCDMA850; Frequency: 836.6 MHz;Duty Cycle: 1:1
Medium parameters used (interpolated): f = 836.6 MHz; σ = 0.981 mho/m; ε_r = 56.8; ρ = 1000 kg/m^3
Phantom section: Flat Section ; Measurement SW: DASY4, V4.7 Build 71; Postprocessing SW: SEMCAD, V1.8 Build 184

DASY4 Configuration:
- Probe: ES3DV3 - SN3161; ConvF(5.86, 5.86, 5.86); Calibrated: 2011-03-17
- Sensor-Surface: 4mm (Mechanical Surface Detection)
- Electronics: DAE3 Sn446; Calibrated: 2010-09-21
- Phantom: SAM 835/900 MHz; Type: SAM

WCDMA850 Hotspot Rear 4183/Area Scan (51x91x1): Measurement grid: dx=15mm, dy=15mm

Info: Interpolated medium parameters used for SAR evaluation.
Maximum value of SAR (interpolated) = 0.791 mW/g

WCDMA850 Hotspot Rear 4183/Zoom Scan (5x5x7)/Cube 0: Measurement grid: dx=8mm, dy=8mm, dz=5mm
Reference Value = 8.65 V/m; Power Drift = 0.014 dB
Peak SAR (extrapolated) = 1.02 W/kg
SAR(1 g) = 0.750 mW/g; SAR(10 g) = 0.533 mW/g

Info: Interpolated medium parameters used for SAR evaluation.
Maximum value of SAR (measured) = 0.791 mW/g

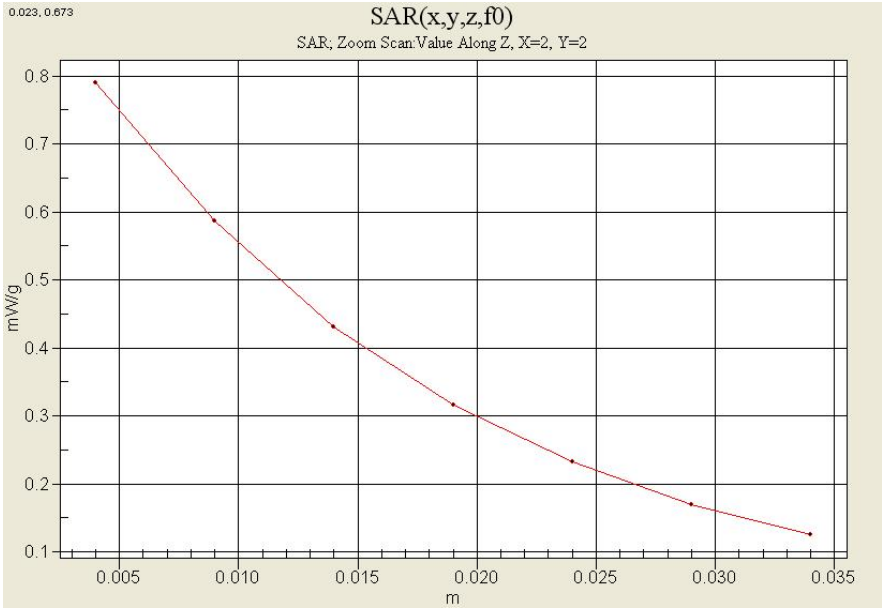

Test Laboratory: HCT CO., LTD
EUT Type: Cellular/PCS GSM/GPRS/EDGE/HSDPA Phone with Bluetooth and WLAN
Liquid Temperature: 21.1 ℃
Ambient Temperature: 21.3 ℃
Test Date: June 14, 2011

DUT: LG-P690g; Type: bar; Serial: #1

Communication System: WCDMA1900; Frequency: 1880 MHz;Duty Cycle: 1:1
Medium parameters used: f = 1880 MHz; σ = 1.39 mho/m; ε_r = 39.1; ρ = 1000 kg/m^3
Phantom section: Left Section ; Measurement SW: DASY4, V4.7 Build 71; Postprocessing SW: SEMCAD, V1.8 Build 184

DASY4 Configuration:
- Probe: ES3DV3 - SN3161; ConvF(4.91, 4.91, 4.91); Calibrated: 2011-03-17
- Sensor-Surface: 4mm (Mechanical Surface Detection)
- Electronics: DAE3 Sn446; Calibrated: 2010-09-21
- Phantom: SAM 1800/1900 MHz; Type: SAM

Left touch 9400/Area Scan (51x81x1): Measurement grid: dx=15mm, dy=15mm
Maximum value of SAR (interpolated) = 0.816 mW/g

Left touch 9400/Zoom Scan (5x5x7)/Cube 0: Measurement grid: dx=8mm, dy=8mm, dz=5mm
Reference Value = 8.32 V/m; Power Drift = 0.026 dB
Peak SAR (extrapolated) = 1.32 W/kg
SAR(1 g) = 0.764 mW/g; SAR(10 g) = 0.416 mW/g
Maximum value of SAR (measured) = 0.846 mW/g

Test Laboratory: HCT CO., LTD
EUT Type: Cellular/PCS GSM/GPRS/EDGE/HSDPA Phone with Bluetooth and WLAN
Liquid Temperature: 21.1 ℃
Ambient Temperature: 21.3 ℃
Test Date: June 14, 2011

DUT: LG-P690g; Type: bar; Serial: #1

Communication System: WCDMA1900; Frequency: 1880 MHz;Duty Cycle: 1:1
Medium parameters used: f = 1880 MHz; σ = 1.54 mho/m; ε_r = 53; ρ = 1000 kg/m^3
Phantom section: Flat Section ; Measurement SW: DASY4, V4.7 Build 71; Postprocessing SW: SEMCAD, V1.8 Build 184

DASY4 Configuration:
- Probe: ES3DV3 - SN3161; ConvF(4.49, 4.49, 4.49); Calibrated: 2011-03-17
- Sensor-Surface: 4mm (Mechanical Surface Detection)
- Electronics: DAE3 Sn446; Calibrated: 2010-09-21
- Phantom: SAM 1800/1900 MHz; Type: SAM

WCDMA1900 Hotspot Rear 9400/Area Scan (51x91x1): Measurement grid: dx=15mm, dy=15mm
Maximum value of SAR (interpolated) = 0.832 mW/g

WCDMA1900 Hotspot Rear 9400/Zoom Scan (5x5x7)/Cube 0: Measurement grid: dx=8mm, dy=8mm, dz=5mm
Reference Value = 10.1 V/m; Power Drift = -0.172 dB
Peak SAR (extrapolated) = 1.27 W/kg
SAR(1 g) = 0.749 mW/g; SAR(10 g) = 0.430 mW/g
Maximum value of SAR (measured) = 0.809 mW/g

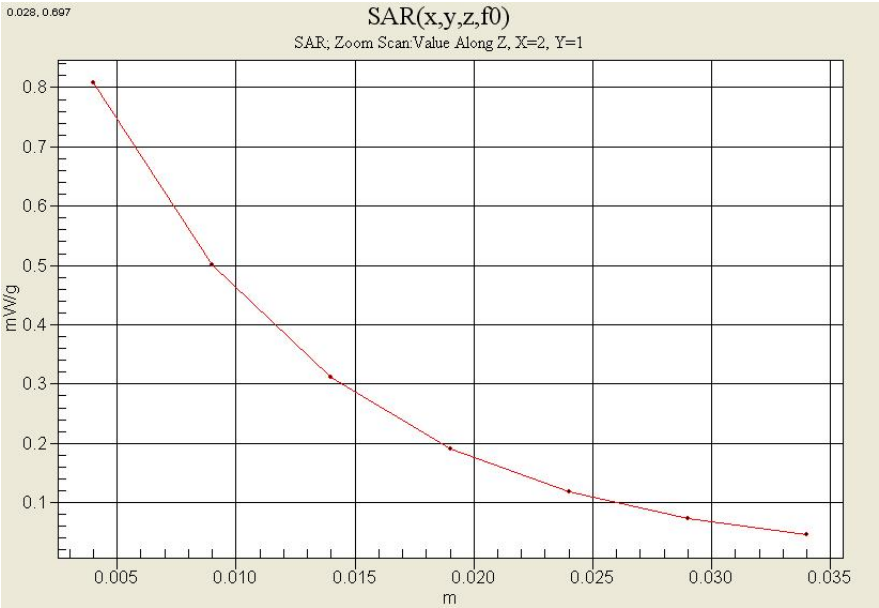

Test Laboratory: HCT CO., LTD
EUT Type: Cellular/PCS GSM/GPRS/EDGE/HSDPA Phone with Bluetooth and WLAN
Liquid Temperature: 21.2 ℃
Ambient Temperature: 21.4 ℃
Test Date: June 13, 2011

DUT: LG-P690g; Type: bar; Serial: #1

Communication System: 2450MHz FCC; Frequency: 2462 MHz;Duty Cycle: 1:1
Medium parameters used (interpolated): f = 2462 MHz; σ = 1.79 mho/m; ε_r = 38.7; ρ = 1000 kg/m^3
Phantom section: Left Section ; Measurement SW: DASY4, V4.7 Build 71; Postprocessing SW: SEMCAD, V1.8 Build 184

DASY4 Configuration:
- Probe: ES3DV3 - SN3161; ConvF(4.26, 4.26, 4.26); Calibrated: 2011-03-17
- Sensor-Surface: 4mm (Mechanical Surface Detection)
- Electronics: DAE3 Sn446; Calibrated: 2010-09-21
- Phantom: SAM 1800/1900 MHz; Type: SAM

Left touch 11/Area Scan (51x81x1): Measurement grid: dx=15mm, dy=15mm

Info: Interpolated medium parameters used for SAR evaluation.
Maximum value of SAR (interpolated) = 0.376 mW/g

Left touch 11/Zoom Scan (5x5x7)/Cube 0: Measurement grid: dx=8mm, dy=8mm, dz=5mm
Reference Value = 4.07 V/m; Power Drift = 0.099 dB
Peak SAR (extrapolated) = 1.11 W/kg
SAR(1 g) = 0.422 mW/g; SAR(10 g) = 0.166 mW/g

Maximum value of SAR (measured) = 0.471 mW/g

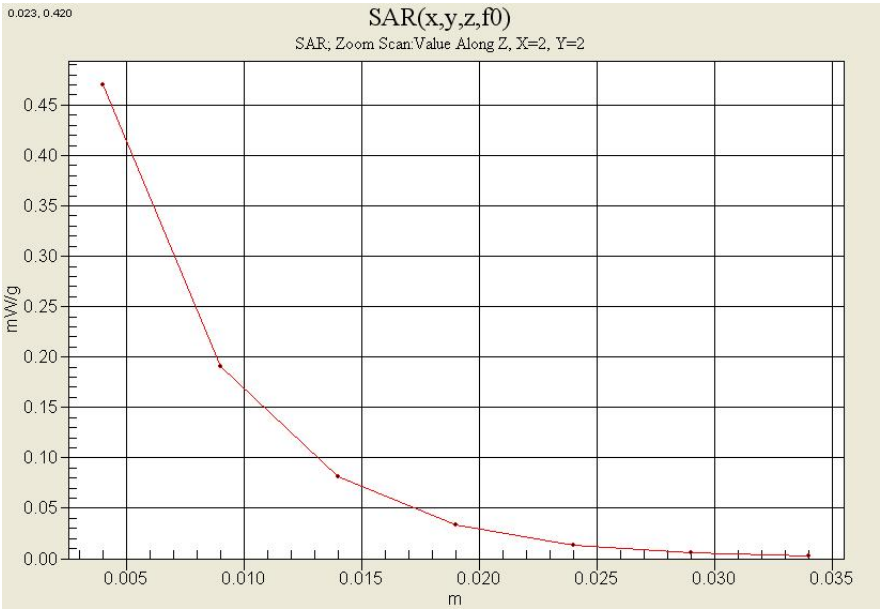

Test Laboratory: HCT CO., LTD
EUT Type: Cellular/PCS GSM/GPRS/EDGE/HSDPA Phone with Bluetooth and WLAN
Liquid Temperature: 21.2 ℃
Ambient Temperature: 21.4 ℃
Test Date: June 13, 2011

DUT: LG-P690g; Type: bar; Serial: #1

Communication System: 2450MHz FCC; Frequency: 2462 MHz;Duty Cycle: 1:1
Medium parameters used (interpolated): f = 2462 MHz; σ = 1.96 mho/m; ε_r = 51.8; ρ = 1000 kg/m^3
Phantom section: Flat Section ; Measurement SW: DASY4, V4.7 Build 71; Postprocessing SW: SEMCAD, V1.8 Build 184

DASY4 Configuration:
- Probe: ES3DV3 - SN3161; ConvF(4.03, 4.03, 4.03); Calibrated: 2011-03-17
- Sensor-Surface: 4mm (Mechanical Surface Detection)
- Electronics: DAE3 Sn446; Calibrated: 2010-09-21
- Phantom: 800/900 Phantom; Type: SAM

802.11b Hotspot Rear 11/Area Scan (61x91x1): Measurement grid: dx=15mm, dy=15mm

Info: Interpolated medium parameters used for SAR evaluation.

802.11b Hotspot Rear 11/Zoom Scan (5x5x7)/Cube 0: Measurement grid: dx=8mm, dy=8mm, dz=5mm
Reference Value = 1.72 V/m; Power Drift = 0.08 dB
Peak SAR (extrapolated) = 0.268 W/kg
SAR(1 g) = 0.082 mW/g; SAR(10 g) = 0.033 mW/g

Info: Interpolated medium parameters used for SAR evaluation.
Maximum value of SAR (measured) = 0.088 mW/g

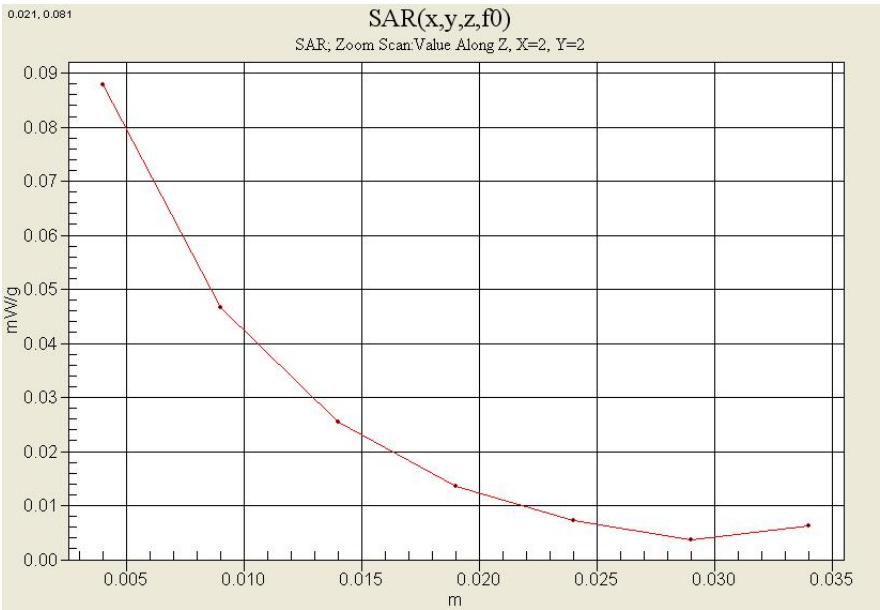

Attachment 2. – Dipole Validation Plots

■ Validation Data (835 MHz Head)

Test Laboratory: HCT CO., LTD

Input Power 100 mW (20 dBm)

Liquid Temp: 21.2 ℃

Test Date: June 13, 2011

DUT: Dipole 835 MHz; Type: D835V2; Serial: D835V2 – SN:441

Communication System: CW; Frequency: 835 MHz;Duty Cycle: 1:1
Medium parameters used: f = 835 MHz; σ = 0.857 mho/m; ε_r = 41.9; ρ = 1000 kg/m^3
Phantom section: Flat Section ; Measurement SW: DASY4, V4.7 Build 71; Postprocessing SW: SEMCAD, V1.8 Build 184

DASY4 Configuration:
- Probe: ES3DV3 – SN3161; ConvF(5.84, 5.84, 5.84); Calibrated: 2011-03-17
- Sensor-Surface: 4mm (Mechanical Surface Detection)
- Electronics: DAE3 Sn446; Calibrated: 2010-09-21
- Phantom: SAM 835/900 MHz; Type: SAM

Validation 835 MHz/Area Scan (61x81x1): Measurement grid: dx=15mm, dy=15mm
Maximum value of SAR (interpolated) = 1.03 mW/g

Validation 835 MHz/Zoom Scan (5x5x7)/Cube 0: Measurement grid: dx=8mm, dy=8mm, dz=5mm
Reference Value = 35.2 V/m; Power Drift = -0.001 dB
Peak SAR (extrapolated) = 1.41 W/kg
SAR(1 g) = 0.953 mW/g; SAR(10 g) = 0.628 mW/g
Maximum value of SAR (measured) = 1.03 mW/g

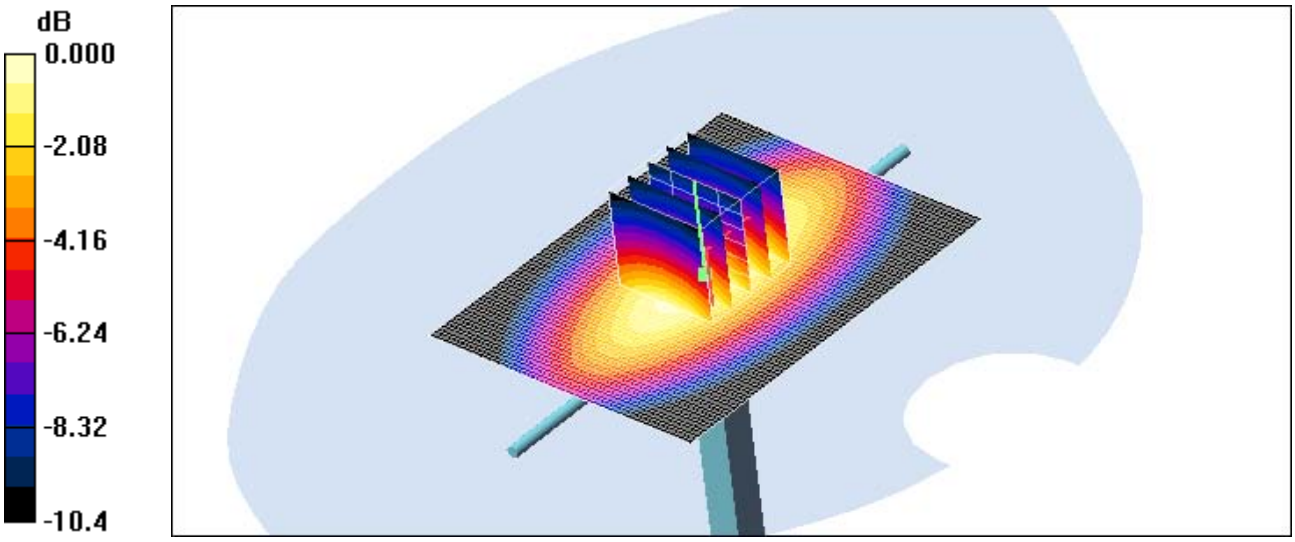

0 dB = 1.03mW/g

■ Validation Data (835 MHz Body)

Test Laboratory: HCT CO., LTD

Input Power 100 mW (20 dBm)

Liquid Temp: 21.2 ℃

Test Date: June 13, 2011

DUT: Dipole 835 MHz; Type: D835V2; Serial: D835V2 – SN:441

Communication System: CW; Frequency: 835 MHz;Duty Cycle: 1:1
Medium parameters used: f = 835 MHz; σ = 0.98 mho/m; ε_r = 56.8; ρ = 1000 kg/m^3
Phantom section: Flat Section ; Measurement SW: DASY4, V4.7 Build 71; Postprocessing SW: SEMCAD, V1.8 Build 184

DASY4 Configuration:
- Probe: ES3DV3 – SN3161; ConvF(5.86, 5.86, 5.86); Calibrated: 2011-03-17
- Sensor-Surface: 4mm (Mechanical Surface Detection)
- Electronics: DAE3 Sn446; Calibrated: 2010-09-21
- Phantom: 835/900 Phamtom ; Type: SAM

Validation 835 MHz/Area Scan (61x81x1): Measurement grid: dx=15mm, dy=15mm
Maximum value of SAR (interpolated) = 1.03 mW/g

Validation 835 MHz/Zoom Scan (5x5x7)/Cube 0: Measurement grid: dx=8mm, dy=8mm, dz=5mm
Reference Value = 32.8 V/m; Power Drift = -0.006 dB
Peak SAR (extrapolated) = 1.40 W/kg
SAR(1 g) = 0.944 mW/g; SAR(10 g) = 0.618 mW/g
Maximum value of SAR (measured) = 1.02 mW/g

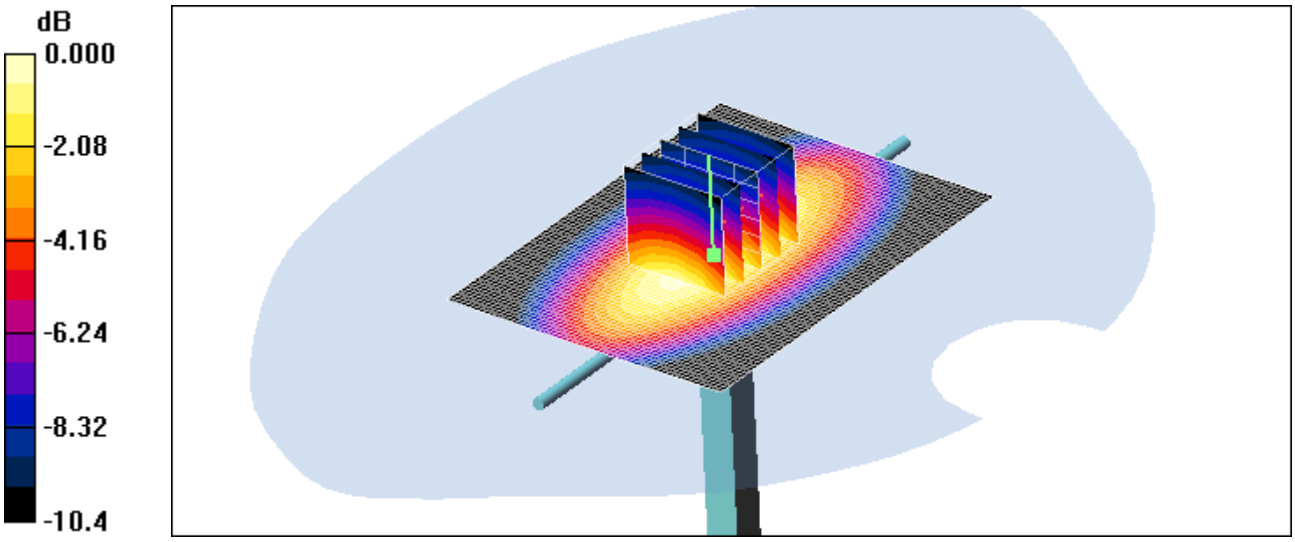

0 dB = 1.02mW/g

■ Validation Data (1900 MHz Head)

Test Laboratory: HCT CO., LTD

Input Power 100 mW (20 dBm)

Liquid Temp: 21.1 ℃

Test Date: June 14, 2011

DUT: Dipole 1900 MHz; Type: D1900V2; Serial: D1900V2 – SN:5d032

Communication System: CW; Frequency: 1900 MHz;Duty Cycle: 1:1
Medium parameters used: f = 1900 MHz; σ = 1.43 mho/m; ε_r = 39.2; ρ = 1000 kg/m^3
Phantom section: Flat Section ; Measurement SW: DASY4, V4.7 Build 71; Postprocessing SW: SEMCAD, V1.8 Build 184

DASY4 Configuration:
- Probe: ES3DV3 – SN3161; ConvF(4.91, 4.91, 4.91); Calibrated: 2011-03-17
- Sensor-Surface: 4mm (Mechanical Surface Detection)
- Electronics: DAE3 Sn446; Calibrated: 2010-09-21
- Phantom: SAM 1800/1900 MHz; Type: SAM

Dipole 1900MHz Validation/Area Scan (61x61x1): Measurement grid: dx=15mm, dy=15mm
Maximum value of SAR (interpolated) = 4.64 mW/g

Dipole 1900MHz Validation/Zoom Scan (5x5x7)/Cube 0: Measurement grid: dx=8mm, dy=8mm, dz=5mm
Reference Value = 56.2 V/m; Power Drift = 0.014 dB
Peak SAR (extrapolated) = 8.05 W/kg
SAR(1 g) = 4.02 mW/g; SAR(10 g) = 1.99 mW/g
Maximum value of SAR (measured) = 4.42 mW/g

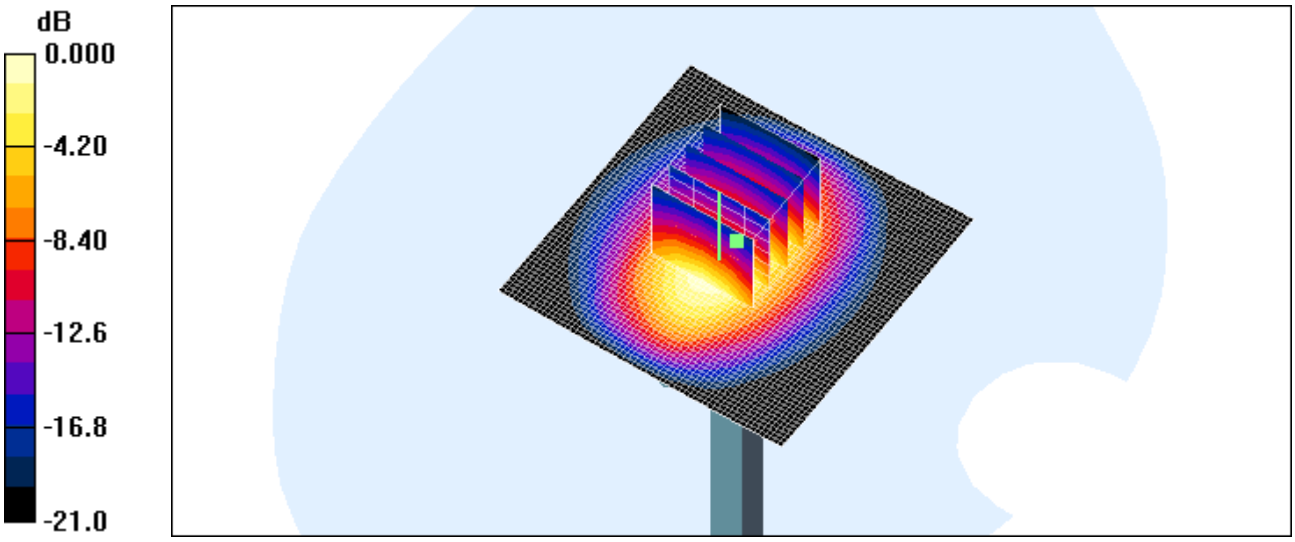

0 dB = 4.42mW/g

■ Validation Data (1900 MHz Body)

Test Laboratory: HCT CO., LTD

Input Power 100 mW (20 dBm)

Liquid Temp: 21.1 ℃

Test Date: June 14, 2011

DUT: Dipole 1900 MHz; Type: D1900V2; Serial: D1900V2 – SN:5d032

Communication System: CW; Frequency: 1900 MHz;Duty Cycle: 1:1
Medium parameters used: f = 1900 MHz; σ = 1.57 mho/m; ε_r = 53; ρ = 1000 kg/m^3
Phantom section: Flat Section ; Measurement SW: DASY4, V4.7 Build 71; Postprocessing SW: SEMCAD, V1.8 Build 184

DASY4 Configuration:
- Probe: ES3DV3 - SN3161; ConvF(4.49, 4.49, 4.49); Calibrated: 2011-03-17
- Sensor-Surface: 4mm (Mechanical Surface Detection)
- Electronics: DAE3 Sn446; Calibrated: 2010-09-21
- Phantom: SAM 1800/1900 MHz; Type: SAM

Dipole 1900MHz Validation/Area Scan (61x61x1): Measurement grid: dx=15mm, dy=15mm
Maximum value of SAR (interpolated) = 4.95 mW/g

Dipole 1900MHz Validation/Zoom Scan (5x5x7)/Cube 0: Measurement grid: dx=8mm, dy=8mm, dz=5mm
Reference Value = 56.0 V/m; Power Drift = 0.026 dB
Peak SAR (extrapolated) = 8.38 W/kg
SAR(1 g) = 4.29 mW/g; SAR(10 g) = 2.14 mW/g

Maximum value of SAR (measured) = 4.78 mW/g

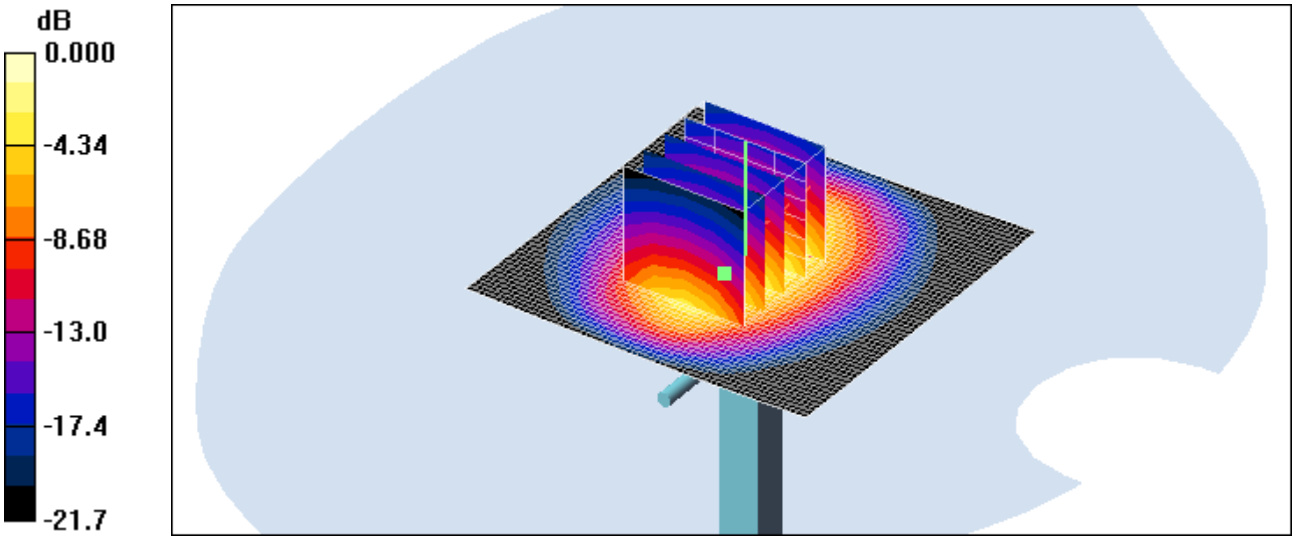

0 dB = 4.78mW/g

■ Validation Data (2450 MHz Head)

Test Laboratory: HCT CO., LTD

Input Power 100 mW (20 dBm)

Liquid Temp: 21.2 ℃

Test Date: June 13, 2011

DUT: Dipole 2450 MHz; Type: D2450V2; Serial: D2450V2 – SN:743

Communication System: CW; Frequency: 2450 MHz;Duty Cycle: 1:1
Medium parameters used: f = 2450 MHz; σ = 1.81 mho/m; ε_r = 38.7; ρ = 1000 kg/m^3
Phantom section: Flat Section ; Measurement SW: DASY4, V4.7 Build 71; Postprocessing SW: SEMCAD, V1.8 Build 184

DASY4 Configuration:
- Probe: ES3DV3 – SN3161; ConvF(4.26, 4.26, 4.26); Calibrated: 2011-03-17
- Sensor-Surface: 4mm (Mechanical Surface Detection)
- Electronics: DAE3 Sn446; Calibrated: 2010-09-21
- Phantom: SAM 1800/1900 MHz; Type: SAM

Validation 2450MHz/Area Scan (61x61x1): Measurement grid: dx=15mm, dy=15mm
Maximum value of SAR (interpolated) = 6.42 mW/g

Validation 2450MHz/Zoom Scan (5x5x7)/Cube 0: Measurement grid: dx=8mm, dy=8mm, dz=5mm
Reference Value = 56.8 V/m; Power Drift = 0.012 dB
Peak SAR (extrapolated) = 13.7 W/kg
SAR(1 g) = 5.41 mW/g; SAR(10 g) = 2.39 mW/g
Maximum value of SAR (measured) = 5.88 mW/g

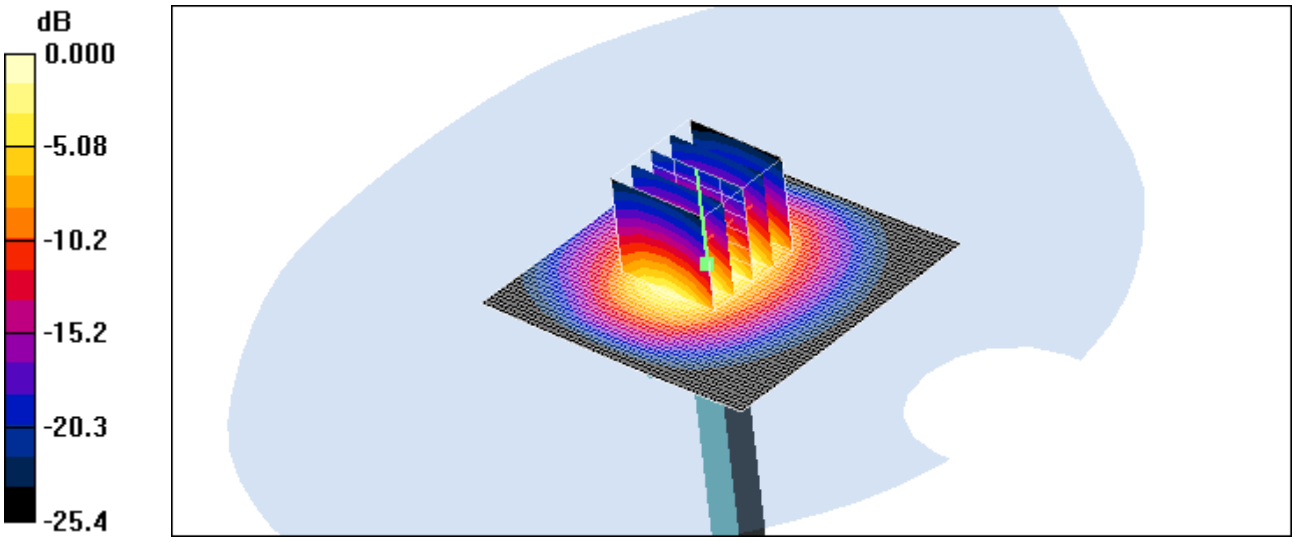

0 dB = 5.88mW/g

■ Validation Data (2450 MHz Body)

Test Laboratory: HCT CO., LTD

Input Power 100 mW (20 dBm)

Liquid Temp: 21.2 ℃

Test Date: June 13, 2011

DUT: Dipole 2450 MHz; Type: D2450V2; Serial: D2450V2 – SN:743

Communication System: CW; Frequency: 2450 MHz;Duty Cycle: 1:1
Medium parameters used: f = 2450 MHz; σ = 1.94 mho/m; ε_r = 51.9; ρ = 1000 kg/m^3
Phantom section: Flat Section ; Measurement SW: DASY4, V4.7 Build 71; Postprocessing SW: SEMCAD, V1.8 Build 184

DASY4 Configuration:
- Probe: ES3DV3 – SN3161; ConvF(4.03, 4.03, 4.03); Calibrated: 2011-03-17
- Sensor-Surface: 4mm (Mechanical Surface Detection)
- Electronics: DAE3 Sn446; Calibrated: 2010-09-21
- Phantom: SAM 1800/1900 MHz; Type: SAM

Validation 2450MHz/Area Scan (61x61x1): Measurement grid: dx=15mm, dy=15mm
Maximum value of SAR (interpolated) = 6.65 mW/g

Validation 2450MHz/Zoom Scan (5x5x7)/Cube 0: Measurement grid: dx=8mm, dy=8mm, dz=5mm
Reference Value = 55.4 V/m; Power Drift = -0.017 dB
Peak SAR (extrapolated) = 14.2 W/kg
SAR(1 g) = 5.56 mW/g; SAR(10 g) = 2.47 mW/g
Maximum value of SAR (measured) = 5.95 mW/g

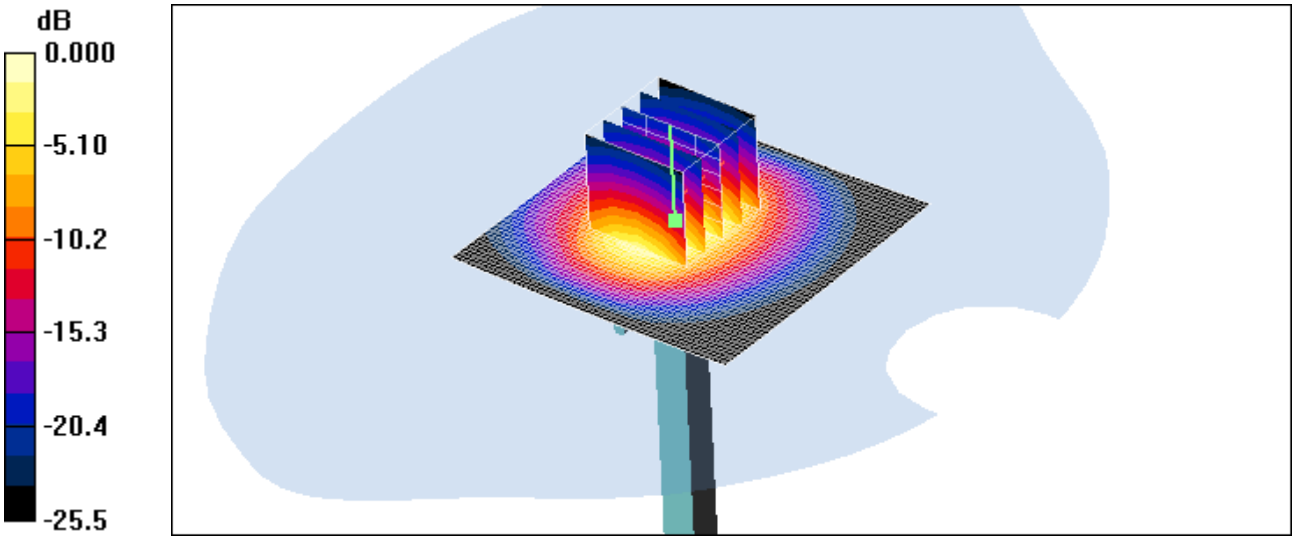

0 dB = 5.95mW/g

■ Dielectric Parameter (835 MHz Head)

Title	LG-P690G
SubTitle	GSM850(Head)
Test Date	June 13, 2011

Frequency	e'	e''
800000000.0000	42.3828	18.6462
805000000.0000	42.2927	18.6116
810000000.0000	42.2747	18.6006
815000000.0000	42.1713	18.5493
820000000.0000	42.0488	18.5202
825000000.0000	42.0189	18.4764
830000000.0000	41.9569	18.4474
835000000.0000	41.8625	18.4489
840000000.0000	41.7875	18.4035
845000000.0000	41.7333	18.3736
850000000.0000	41.6603	18.3650
855000000.0000	41.5775	18.3543
860000000.0000	41.5093	18.3194
865000000.0000	41.4414	18.3002
870000000.0000	41.3779	18.2750
875000000.0000	41.3327	18.2750
880000000.0000	41.2497	18.2462
885000000.0000	41.1852	18.2423
890000000.0000	41.1781	18.2615
895000000.0000	41.1167	18.2124
900000000.0000	41.0136	18.1863

■ Dielectric Parameter (835 MHz Body)

Title	LG-P690G
SubTitle	GSM850(Body)
Test Date	June 13, 2011

Frequency	e'	e''
800000000.0000	57.0858	21.2811
805000000.0000	57.0068	21.2677
810000000.0000	56.9804	21.2634
815000000.0000	56.9789	21.2089
820000000.0000	56.9434	21.1914
825000000.0000	56.8921	21.1510
830000000.0000	56.8985	21.1383
835000000.0000	56.8489	21.0886
840000000.0000	56.7938	21.0832
845000000.0000	56.7181	20.9906
850000000.0000	56.7009	20.9918
855000000.0000	56.6134	20.9614
860000000.0000	56.5518	20.8723
865000000.0000	56.5098	20.9243
870000000.0000	56.3990	20.8384
875000000.0000	56.3454	20.7959
880000000.0000	56.2612	20.7895
885000000.0000	56.2015	20.7473
890000000.0000	56.1324	20.7465
895000000.0000	56.0883	20.7488
900000000.0000	56.0508	20.7301

■ Dielectric Parameter (1900 MHz Head)

Title LG-P690G
SubTitle WCDMA1900(Head)
Test Date June 14, 2011

Frequency	e'	e''
1850000000.0000	39.9580	12.9851
1855000000.0000	39.8012	13.0167
1860000000.0000	39.6076	13.0439
1865000000.0000	39.4285	13.0971
1870000000.0000	39.2959	13.1515
1875000000.0000	39.1752	13.2119
1880000000.0000	39.1020	13.2809
1885000000.0000	39.0607	13.3536
1890000000.0000	39.0555	13.4259
1895000000.0000	39.0892	13.5035
1900000000.0000	39.1565	13.5746
1905000000.0000	39.2537	13.6087
1910000000.0000	39.3619	13.6095
1915000000.0000	39.4831	13.5970
1920000000.0000	39.6072	13.5752
1925000000.0000	39.7312	13.5412
1930000000.0000	39.8664	13.4951
1935000000.0000	39.9471	13.4453
1940000000.0000	39.9934	13.4121
1945000000.0000	39.9943	13.3959
1950000000.0000	39.9302	13.3769

■ Dielectric Parameter (1900 MHz Body)

Title LG-P690G
SubTitle WCDMA1900(Body)
Test Date June 14, 2011

Frequency	e'	e''
1850000000.0000	53.1885	14.6293
1855000000.0000	53.1515	14.6405
1860000000.0000	53.1252	14.6529
1865000000.0000	53.1206	14.6909
1870000000.0000	53.0874	14.6978
1875000000.0000	53.0813	14.7225
1880000000.0000	53.0489	14.7456
1885000000.0000	53.0334	14.7685
1890000000.0000	53.0209	14.7875
1895000000.0000	53.0018	14.7961
1900000000.0000	52.9996	14.8127
1905000000.0000	52.9946	14.8216
1910000000.0000	52.9843	14.8346
1915000000.0000	52.9706	14.8532
1920000000.0000	52.9441	14.8791
1925000000.0000	52.9343	14.8966
1930000000.0000	52.9160	14.9026
1935000000.0000	52.8995	14.9147
1940000000.0000	52.8857	14.9229
1945000000.0000	52.8538	14.9512
1950000000.0000	52.8470	14.9576

■ Dielectric Parameter (2 450 MHz Head)

Title	LG-P690G
SubTitle	2450MHz (Head)
Test Date	June 13, 2011

Frequency	e'	e''
2400000000.0000	39.0025	13.1157
2405000000.0000	38.9873	13.1009
2410000000.0000	38.9643	13.1065
2415000000.0000	38.9221	13.1254
2420000000.0000	38.8556	13.1149
2425000000.0000	38.6423	13.0835
2430000000.0000	38.6012	13.0661
2435000000.0000	38.6265	13.1315
2440000000.0000	38.7139	13.1918
2445000000.0000	38.7563	13.2373
2450000000.0000	38.7186	13.2726
2455000000.0000	38.6868	13.2948
2460000000.0000	38.6859	13.3434
2465000000.0000	38.6965	13.3464
2470000000.0000	38.6537	13.4003
2475000000.0000	38.6230	13.3997
2480000000.0000	38.6218	13.4238
2485000000.0000	38.5967	13.4325
2490000000.0000	38.5458	13.4495
2495000000.0000	38.5415	13.4433
2500000000.0000	38.5912	13.4516

■ Dielectric Parameter (2 450 MHz Body)

Title	LG-P690G
SubTitle	2450MHz (Body)
Test Date	June 13, 2011

Frequency	e'	e''
2400000000.0000	52.1761	13.9471
2405000000.0000	52.1567	13.9290
2410000000.0000	52.1166	13.9299
2415000000.0000	52.0578	13.9395
2420000000.0000	52.0467	13.9866
2425000000.0000	52.0001	14.0113
2430000000.0000	51.9596	14.0699
2435000000.0000	51.9590	14.1005
2440000000.0000	51.9334	14.1407
2445000000.0000	51.8853	14.1834
2450000000.0000	51.8717	14.2087
2455000000.0000	51.8585	14.2338
2460000000.0000	51.8432	14.2805
2465000000.0000	51.8420	14.3056
2470000000.0000	51.8211	14.3297
2475000000.0000	51.8107	14.3556
2480000000.0000	51.8132	14.4029
2485000000.0000	51.7891	14.4090
2490000000.0000	51.8003	14.4301
2495000000.0000	51.8118	14.4395
2500000000.0000	51.7894	14.4402

Attachment 3. – Probe Calibration Data

Calibration Laboratory of
Schmid & Partner
Engineering AG
Zeughausstrasse 43, 8004 Zurich, Switzerland

S Schweizerischer Kalibrierdienst
C Service suisse d'étalonnage
S Servizio svizzero di taratura
Swiss Calibration Service

Accredited by the Swiss Accreditation Service (SAS)
The Swiss Accreditation Service is one of the signatories to the EA Multilateral Agreement for the recognition of calibration certificates

Accreditation No.: SCS 108

Client **HCT (Dymstec)**

Certificate No: ES3-3161_Mar11

CALIBRATION CERTIFICATE

Object	ES3DV3 - SN:3161
Calibration procedure(s)	QA CAL-01.v7, QA CAL-23.v4, QA CAL-25.v3 Calibration procedure for dosimetric E-field probes
Calibration date:	March 17, 2011

This calibration certificate documents the traceability to national standards, which realize the physical units of measurements (SI).
The measurements and the uncertainties with confidence probability are given on the following pages and are part of the certificate.

All calibrations have been conducted in the closed laboratory facility: environment temperature (22 ± 3)°C and humidity < 70%.

Calibration Equipment used (M&TE critical for calibration)

Primary Standards	ID	Cal Date (Certificate No.)	Scheduled Calibration
Power meter E4419B	GB41293874	01-Apr-10 (No. 217-01136)	Apr-11
Power sensor E4412A	MY41495277	01-Apr-10 (No. 217-01136)	Apr-11
Power sensor E4412A	MY41498087	01-Apr-10 (No. 217-01136)	Apr-11
Reference 3 dB Attenuator	SN: S5054 (3c)	30-Mar-10 (No. 217-01159)	Mar-11
Reference 20 dB Attenuator	SN: S5086 (20b)	30-Mar-10 (No. 217-01161)	Mar-11
Reference 30 dB Attenuator	SN: S5129 (30b)	30-Mar-10 (No. 217-01160)	Mar-11
Reference Probe ES3DV2	SN: 3013	29-Dec-10 (No. ES3-3013_Dec10)	Dec-11
DAE4	SN: 654	23-Apr-10 (No. DAE4-654_Apr10)	Apr-11
Secondary Standards	ID	Check Date (in house)	Scheduled Check
RF generator HP 8648C	US3642U01700	4-Aug-99 (in house check Oct-09)	In house check: Oct-11
Network Analyzer HP 8753E	US37390585	18-Oct-01 (in house check Oct-10)	In house check: Oct-11

	Name	Function	Signature
Calibrated by:	Jeton Kastrati	Laboratory Technician	
Approved by:	Katja Pokovic	Technical Manager	

Issued: March 18, 2011

This calibration certificate shall not be reproduced except in full without written approval of the laboratory.

Certificate No: ES3-3161_Mar11 Page 1 of 11

Calibration Laboratory of
Schmid & Partner
Engineering AG
Zeughausstrasse 43, 8004 Zurich, Switzerland

S Schweizerischer Kalibrierdienst
C Service suisse d'étalonnage
Servizio svizzero di taratura
S Swiss Calibration Service

Accredited by the Swiss Accreditation Service (SAS)
The Swiss Accreditation Service is one of the signatories to the EA Multilateral Agreement for the recognition of calibration certificates

Accreditation No.: SCS 108

Glossary:

TSL	tissue simulating liquid
NORMx,y,z	sensitivity in free space
ConvF	sensitivity in TSL / NORMx,y,z
DCP	diode compression point
CF	crest factor (1/duty_cycle) of the RF signal
A, B, C	modulation dependent linearization parameters
Polarization φ	φ rotation around probe axis
Polarization ϑ	ϑ rotation around an axis that is in the plane normal to probe axis (at measurement center), i.e., ϑ = 0 is normal to probe axis

Calibration is Performed According to the Following Standards:

a) IEEE Std 1528-2003, "IEEE Recommended Practice for Determining the Peak Spatial-Averaged Specific Absorption Rate (SAR) in the Human Head from Wireless Communications Devices: Measurement Techniques", December 2003
b) IEC 62209-1, "Procedure to measure the Specific Absorption Rate (SAR) for hand-held devices used in close proximity to the ear (frequency range of 300 MHz to 3 GHz)", February 2005

Methods Applied and Interpretation of Parameters:

- *NORMx,y,z:* Assessed for E-field polarization ϑ = 0 (f ≤ 900 MHz in TEM-cell; f > 1800 MHz: R22 waveguide). NORMx,y,z are only intermediate values, i.e., the uncertainties of NORMx,y,z does not affect the E^2-field uncertainty inside TSL (see below *ConvF*).
- *NORM(f)x,y,z = NORMx,y,z * frequency_response* (see Frequency Response Chart). This linearization is implemented in DASY4 software versions later than 4.2. The uncertainty of the frequency response is included in the stated uncertainty of *ConvF*.
- *DCPx,y,z:* DCP are numerical linearization parameters assessed based on the data of power sweep with CW signal (no uncertainty required). DCP does not depend on frequency nor media.
- *PAR:* PAR is the Peak to Average Ratio that is not calibrated but determined based on the signal characteristics
- *Ax,y,z; Bx,y,z; Cx,y,z* are numerical linearization parameters in dB assessed based on the data of power sweep for specific modulation signal. The parameters do not depend on frequency nor media.
- *VR:* VR is the validity range of the calibration related to the average diode voltage or DAE voltage in mV.
- *ConvF and Boundary Effect Parameters:* Assessed in flat phantom using E-field (or Temperature Transfer Standard for f ≤ 800 MHz) and inside waveguide using analytical field distributions based on power measurements for f > 800 MHz. The same setups are used for assessment of the parameters applied for boundary compensation (alpha, depth) of which typical uncertainty values are given. These parameters are used in DASY4 software to improve probe accuracy close to the boundary. The sensitivity in TSL corresponds to *NORMx,y,z * ConvF* whereby the uncertainty corresponds to that given for *ConvF*. A frequency dependent *ConvF* is used in DASY version 4.4 and higher which allows extending the validity from ± 50 MHz to ± 100 MHz.
- *Spherical isotropy (3D deviation from isotropy)*: in a field of low gradients realized using a flat phantom exposed by a patch antenna.
- *Sensor Offset*: The sensor offset corresponds to the offset of virtual measurement center from the probe tip (on probe axis). No tolerance required.

Probe ES3DV3

SN:3161

Manufactured: October 8, 2007
Calibrated: March 17, 2011

Calibrated for DASY/EASY Systems
(Note: non-compatible with DASY2 system!)

DASY/EASY - Parameters of Probe: ES3DV3 - SN:3161

Basic Calibration Parameters

	Sensor X	Sensor Y	Sensor Z	Unc (k=2)
Norm ($\mu V/(V/m)^2$)[A]	1.10	1.27	1.22	± 10.1 %
DCP (mV)[B]	100.2	98.1	99.3	

Modulation Calibration Parameters

UID	Communication System Name	PAR		A dB	B dB	C dB	VR mV	Unc[E] (k=2)
10000	CW	0.00	X	0.00	0.00	1.00	102.7	±2.7 %
			Y	0.00	0.00	1.00	109.4	
			Z	0.00	0.00	1.00	109.2	

The reported uncertainty of measurement is stated as the standard uncertainty of measurement multiplied by the coverage factor k=2, which for a normal distribution corresponds to a coverage probability of approximately 95%.

[A] The uncertainties of NormX,Y,Z do not affect the E^2-field uncertainty inside TSL (see Pages 5 and 6).
[B] Numerical linearization parameter: uncertainty not required.
[E] Uncertainty is determined using the max. deviation from linear response applying rectangular distribution and is expressed for the square of the field value.

DASY/EASY - Parameters of Probe: ES3DV3 - SN:3161

Calibration Parameter Determined in Head Tissue Simulating Media

f (MHz) [C]	Relative Permittivity [F]	Conductivity (S/m) [F]	ConvF X	ConvF Y	ConvF Z	Alpha	Depth (mm)	Unct. (k=2)
750	41.9	0.89	6.10	6.10	6.10	1.00	1.00	± 12.0 %
835	41.5	0.90	5.84	5.84	5.84	1.00	1.10	± 12.0 %
900	41.5	0.97	5.78	5.78	5.78	1.00	1.10	± 12.0 %
1450	40.5	1.20	5.31	5.31	5.31	0.98	1.14	± 12.0 %
1750	40.1	1.37	5.05	5.05	5.05	0.88	1.17	± 12.0 %
1900	40.0	1.40	4.91	4.91	4.91	0.91	1.14	± 12.0 %
1950	40.0	1.40	4.73	4.73	4.73	0.99	1.08	± 12.0 %
2300	39.5	1.67	4.53	4.53	4.53	0.87	1.16	± 12.0 %
2450	39.2	1.80	4.26	4.26	4.26	0.74	1.29	± 12.0 %
2600	39.0	1.96	4.14	4.14	4.14	0.82	1.21	± 12.0 %

[C] Frequency validity of ± 100 MHz only applies for DASY v4.4 and higher (see Page 2), else it is restricted to ± 50 MHz. The uncertainty is the RSS of the ConvF uncertainty at calibration frequency and the uncertainty for the indicated frequency band.
[F] At frequencies below 3 GHz, the validity of tissue parameters (ε and σ) can be relaxed to ± 10% if liquid compensation formula is applied to measured SAR values. At frequencies above 3 GHz, the validity of tissue parameters (ε and σ) is restricted to ± 5%. The uncertainty is the RSS of the ConvF uncertainty for indicated target tissue parameters.

DASY/EASY - Parameters of Probe: ES3DV3- SN:3161

Calibration Parameter Determined in Body Tissue Simulating Media

f (MHz) [C]	Relative Permittivity [F]	Conductivity (S/m) [F]	ConvF X	ConvF Y	ConvF Z	Alpha	Depth (mm)	Unct. (k=2)
750	55.5	0.96	5.93	5.93	5.93	1.00	1.13	± 12.0 %
835	55.2	0.97	5.86	5.86	5.86	1.00	1.16	± 12.0 %
900	55.0	1.05	5.78	5.78	5.78	1.00	1.00	± 12.0 %
1750	53.4	1.49	4.79	4.79	4.79	0.79	1.33	± 12.0 %
1900	53.3	1.52	4.49	4.49	4.49	0.73	1.37	± 12.0 %
1950	53.3	1.52	4.52	4.52	4.52	0.83	1.27	± 12.0 %
2300	52.9	1.81	4.13	4.13	4.13	0.89	1.14	± 12.0 %
2450	52.7	1.95	4.03	4.03	4.03	1.00	1.00	± 12.0 %
2600	52.5	2.16	3.83	3.83	3.83	1.00	1.00	± 12.0 %

[C] Frequency validity of ± 100 MHz only applies for DASY v4.4 and higher (see Page 2), else it is restricted to ± 50 MHz. The uncertainty is the RSS of the ConvF uncertainty at calibration frequency and the uncertainty for the indicated frequency band.
[F] At frequencies below 3 GHz, the validity of tissue parameters (ε and σ) can be relaxed to ± 10% if liquid compensation formula is applied to measured SAR values. At frequencies above 3 GHz, the validity of tissue parameters (ε and σ) is restricted to ± 5%. The uncertainty is the RSS of the ConvF uncertainty for indicated target tissue parameters.

ES3DV3– SN:3161 March 17, 2011

Frequency Response of E-Field
(TEM-Cell:ifi110 EXX, Waveguide: R22)

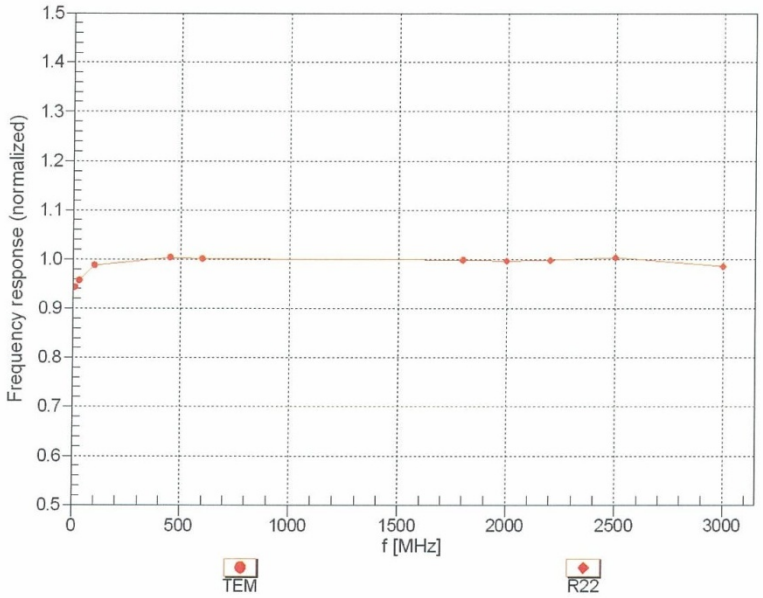

Uncertainty of Frequency Response of E-field: ± 6.3% (k=2)

Certificate No: ES3-3161_Mar11 Page 7 of 11

ES3DV3– SN:3161 March 17, 2011

Receiving Pattern (ϕ), ϑ = 0°

f=600 MHz,TEM

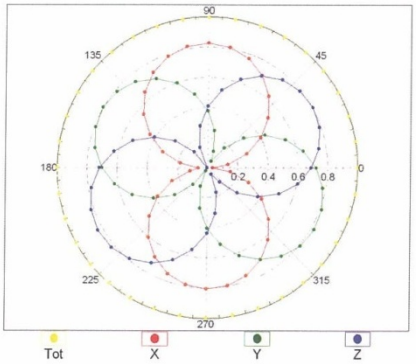

f=1800 MHz,R22

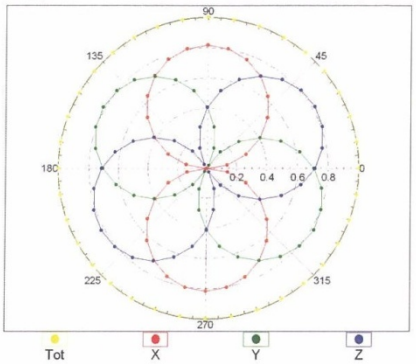

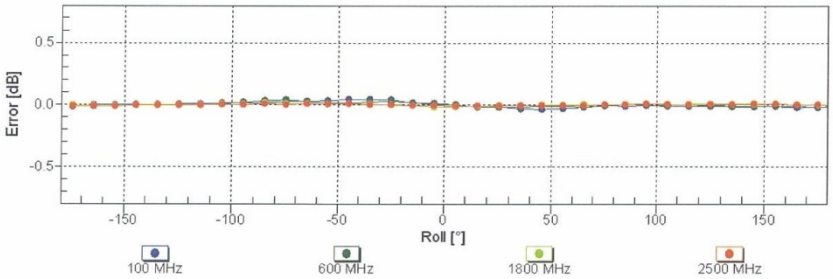

Uncertainty of Axial Isotropy Assessment: ± 0.5% (k=2)

Certificate No: ES3-3161_Mar11 Page 8 of 11

ES3DV3– SN:3161 March 17, 2011

Dynamic Range f(SAR_{head})

(TEM cell , f = 900 MHz)

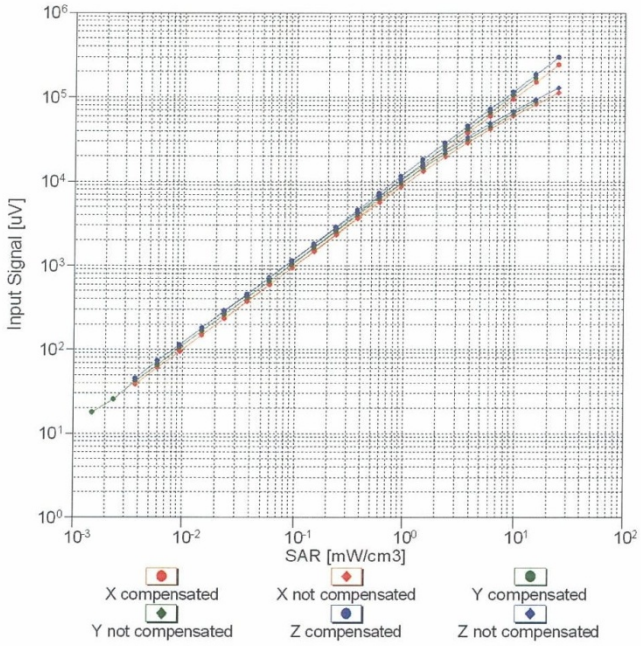

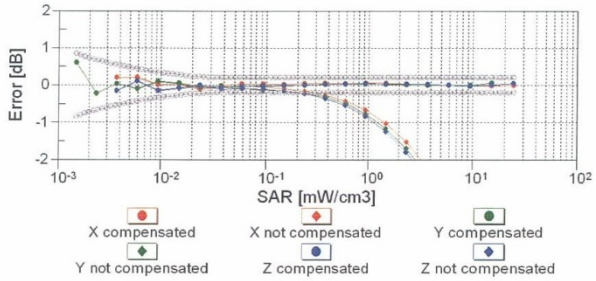

Uncertainty of Linearity Assessment: ± 0.6% (k=2)

Certificate No: ES3-3161_Mar11 Page 9 of 11

ES3DV3– SN:3161 March 17, 2011

Conversion Factor Assessment

f = 1900 MHz,WGLS R22 (H_convF)

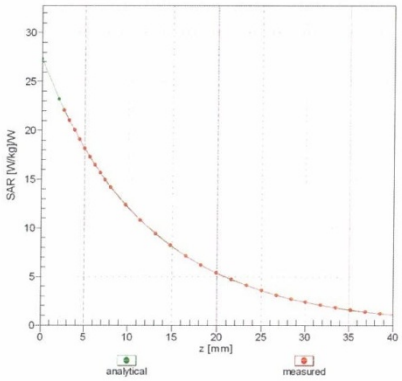

f = 900 MHz,WGLS R9 (H_convF)

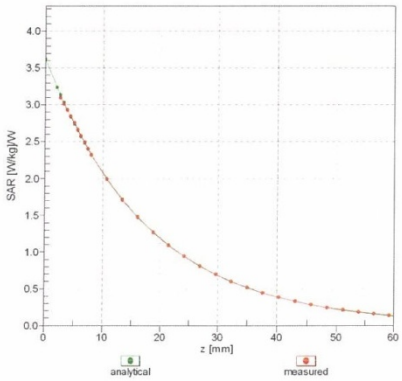

Deviation from Isotropy in Liquid

Error (ϕ, ϑ), f = 900 MHz

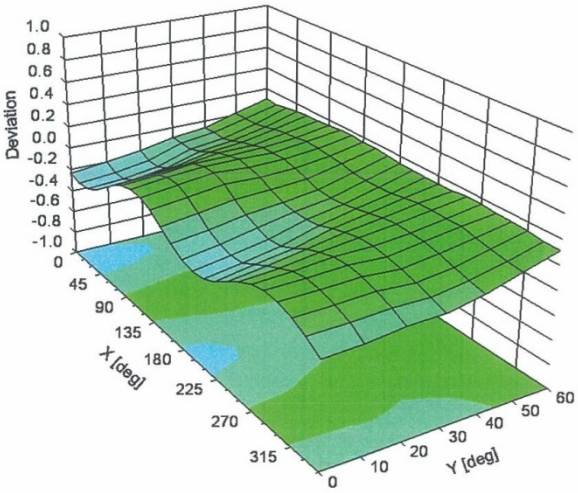

Uncertainty of Spherical Isotropy Assessment: ± 2.6% (k=2)

Certificate No: ES3-3161_Mar11 Page 10 of 11

DASY/EASY - Parameters of Probe: ES3DV3 - SN:3161

Other Probe Parameters

Sensor Arrangement	Triangular
Connector Angle (°)	Not applicable
Mechanical Surface Detection Mode	enabled
Optical Surface Detection Mode	disabled
Probe Overall Length	337 mm
Probe Body Diameter	10 mm
Tip Length	10 mm
Tip Diameter	4 mm
Probe Tip to Sensor X Calibration Point	2 mm
Probe Tip to Sensor Y Calibration Point	2 mm
Probe Tip to Sensor Z Calibration Point	2 mm
Recommended Measurement Distance from Surface	3 mm