PCTEST ENGINEERING LABORATORY, INC.
6660-B Dobbin Road, Columbia, MD 21045 USA
Tel. +1.410.290.6652 / Fax +1.410.290.6554
http://www.pctestlab.com

SAR COMPLIANCE EVALUATION REPORT

Applicant Name:
LG Electronics USA
1000 Sylvan Avenue
Englewood Cliffs, NJ 07632
United States

Date of Testing:
12/13/10 - 12/23/10, 2/15/11
Test Site/Location:
PCTEST Lab, Columbia, MD, USA
Test Report Serial No.:
0Y1011291920-R4.BEJ

FCC ID: **BEJP999DW**

APPLICANT: **LG ELECTRONICS USA**

EUT Type:	850/1900 GSM/GPRS/EDGE and AWS WCDMA/HSPA Phone with Bluetooth and WLAN
Application Type:	Certification
FCC Rule Part(s):	CFR §2.1093; FCC/OET Bulletin 65 Supplement C [June 2001]
FCC Classification:	Licensed Transmitter Held to Ear (PCE) / Digital Transmission System (DTS) FCC Part 15 Frequency Hopping Spread Spectrum Transceiver (DSS)
Model(s):	P999DW, LG-P999DW, P999, LG-P999
Tx Frequency:	824.20 - 848.80 MHz (GSM 850) / 1850.20 - 1909.80 MHz (GSM 1900) 1712.4 - 1752.5 MHz (AWS WCDMA) 2412 - 2462 MHz (WLAN)
Conducted Power:	33.40 dBm GSM 850 / 30.68 dBm GSM 1900 24.01 dBm UMTS IV / 17.17 dBm 2.4 GHz WLAN
Max. SAR Measurement:	0.39 W/kg GSM 850 Head SAR / 0.50 W/kg GSM 850 Body SAR 0.25 W/kg GSM 1900 Head SAR / 0.33 W/kg GSM 1900 Body SAR 0.51 W/kg UMTS IV Head SAR / 0.72 W/kg UMTS IV Body SAR 0.83 W/kg 2.4 GHz WLAN Head SAR / 0.19 W/kg 2.4 GHz WLAN Body SAR
Test Device Serial No.:	Pre-Production [S/N: SAR, 011KPAE000480]

This wireless portable device has been shown to be capable of compliance for localized specific absorption rate (SAR) for uncontrolled environment/general population exposure limits specified in ANSI/IEEE C95.1-1992 and has been tested in accordance with the measurement procedures specified in FCC/OET Bulletin 65 Supplement C (2001), IEEE 1528-2003 and in applicable Industry Canada Radio Standards Specifications (RSS); for North American frequency bands only.

Note: This revised Test Report (S/N: 0Y1011291920-R4.BEJ) supersedes and replaces the previously issued test report on the same subject EUT for the same type of testing as indicated. Please discard or destroy the previously issued test report(s) and dispose of it accordingly.

All models are confirmed to be identical per the manufacturer.

I attest to the accuracy of data. All measurements reported herein were performed by me or were made under my supervision and are correct to the best of my knowledge and belief. I assume full responsibility for the completeness of these measurements and vouch for the qualifications of all persons taking them. Test results reported herein relate only to the item(s) tested.

PCTEST certifies that no party to this application has been subject to a denial of Federal benefits that includes FCC benefits pursuant to Section 5301 of the Anti-Drug Abuse Act of 1988, 21 U.S.C. 862.

Randy Ortanez
President

ACCREDITED
TESTING LABORATORY
CERTIFICATE #2041.01

© 2011 PCTEST Engineering Laboratory, Inc.

TABLE OF CONTENTS

1 INTRODUCTION 3

2 TEST SITE LOCATION 4

3 SAR MEASUREMENT SETUP 5

4 DASY E-FIELD PROBE SYSTEM 7

5 PROBE CALIBRATION PROCESS 8

6 PHANTOM AND EQUIVALENT TISSUES 9

7 DOSIMETRIC ASSESSMENT & PHANTOM SPECS 10

8 DEFINITION OF REFERENCE POINTS 11

9 TEST CONFIGURATION POSITIONS 12

10 FCC RF EXPOSURE LIMITS 15

11 FCC 3G MEASUREMENT PROCEDURES 16

12 SAR TESTING WITH IEEE 802.11 TRANSMITTERS 20

13 SINGLE TX SAR CONSIDERATIONS 23

14 SYSTEM VERIFICATION 24

15 SAR DATA SUMMARY 26

16 FCC MULTI-TX AND ANTENNA SAR CONSIDERATIONS 33

17 EQUIPMENT LIST 36

18 MEASUREMENT UNCERTAINTIES 37

19 CONCLUSION 38

20 REFERENCES 39

21 SAR TEST SETUP PHOTOGRAPHS 41

© 2011 PCTEST Engineering Laboratory, Inc.

1 INTRODUCTION

The FCC has adopted the guidelines for evaluating the environmental effects of radio frequency (RF) radiation in ET Docket 93-62 on Aug. 6, 1996 to protect the public and workers from the potential hazards of RF emissions due to FCC-regulated portable devices. [1]

The safety limits used for the environmental evaluation measurements are based on the criteria published by the American National Standards Institute (ANSI) for localized specific absorption rate (SAR) in IEEE/ANSI C95.1-1992 Standard for Safety Levels with Respect to Human Exposure to Radio Frequency Electromagnetic Fields, 3 kHz to 300 GHz [3] and Health Canada RF Exposure Guidelines Safety Code 6 [24]. The measurement procedure described in IEEE/ANSI C95.3-2002 Recommended Practice for the Measurement of Potentially Hazardous Electromagnetic Fields - RF and Microwave [4] is used for guidance in measuring the Specific Absorption Rate (SAR) due to the RF radiation exposure from the Equipment Under Test (EUT). These criteria for SAR evaluation are similar to those recommended by the International Committee for Non-Ionizing Radiation Protection (ICNIRP) in Biological Effects and Exposure Criteria for Radiofrequency Electromagnetic Fields," Report No. Vol 74. SAR is a measure of the rate of energy absorption due to exposure to an RF transmitting source. SAR values have been related to threshold levels for potential biological hazards.

1.1 SAR Definition

Specific Absorption Rate is defined as the time derivative (rate) of the incremental energy (dU) absorbed by (dissipated in) an incremental mass (dm) contained in a volume element (dV) of a given density (ρ). It is also defined as the rate of RF energy absorption per unit mass at a point in an absorbing body (see Fig. 1-1).

$$SAR = \frac{d}{dt}\left(\frac{dU}{dm}\right) = \frac{d}{dt}\left(\frac{dU}{\rho\, dv}\right)$$

Figure 1-1
SAR Mathematical Equation

SAR is expressed in units of Watts per Kilogram (W/kg).

$$SAR = \frac{\sigma \cdot E^2}{\rho}$$

where:

σ = conductivity of the tissue-simulating material (S/m)
ρ = mass density of the tissue-simulating material (kg/m^3)
E = Total RMS electric field strength (V/m)

NOTE: The primary factors that control rate of energy absorption were found to be the wavelength of the incident field in relation to the dimensions and geometry of the irradiated organism, the orientation of the organism in relation to the polarity of field vectors, the presence of reflecting surfaces, and whether conductive contact is made by the organism with a ground plane.[6]

© 2011 PCTEST Engineering Laboratory, Inc.

2 TEST SITE LOCATION

2.1 INTRODUCTION

The map at the right shows the location of the PCTEST LABORATORY in Columbia, Maryland. It is in proximity to the FCC Laboratory, the Baltimore-Washington International (BWI) airport, the city of Baltimore and Washington, DC.

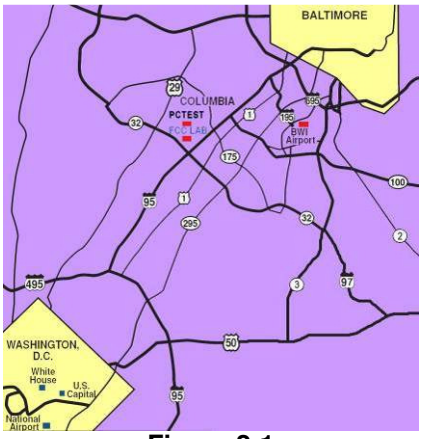

Figure 2-1
Map of the Greater Baltimore and Metropolitan Washington, D.C. area

These measurement tests were conducted at the PCTEST Engineering Laboratory, Inc. facility in New Concept Business Park, Guilford Industrial Park, Columbia, Maryland. The site address is 6660-B Dobbin Road, Columbia, MD 21045. The test site is one of the highest points in the Columbia area with an elevation of 390 feet above mean sea level. The site coordinates are 39° 11'15" N latitude and 76° 49' 38" W longitude. The facility is 1.5 miles north of the FCC laboratory, and the ambient signal and ambient signal strength are approximately equal to those of the FCC laboratory. There are no FM or TV transmitters within 15 miles of the site. The detailed description of the measurement facility was found to be in compliance with the requirements of § 2.948 according to ANSI C63.4 on January 27, 2006 and Industry Canada.

2.2 Test Facility / Accreditations:

Measurements were performed at an independent accredited PCTEST Engineering Lab located in Columbia, MD 21045, U.S.A.

- PCTEST Lab is accredited to ISO 17025-2005 by the American Association for Laboratory Accreditation (A2LA) in Specific Absorption Rate (SAR) testing, Hearing-Aid Compatibility (HAC), Battery Safety, CTIA Test Plans, and wireless testing for FCC and Industry Canada Rules.
- PCTEST Lab is accredited to ISO 17025 by U.S. National Institute of Standards and Technology (NIST) under the National Voluntary Laboratory Accreditation Program (NVLAP Lab code: 100431-0) in EMC, FCC and Telecommunications.
- PCTEST facility is an FCC registered (PCTEST Reg. No. 90864) test facility with the site description report on file and has met all the requirements specified in Section 2.948 of the FCC Rules and Industry Canada (IC-2451).
- PCTEST Lab is a recognized U.S. Conformity Assessment Body (CAB) in EMC and R&TTE (n.b. 0982) under the U.S.-EU Mutual Recognition Agreement (MRA).
- PCTEST TCB is a Telecommunication Certification Body (TCB) accredited to ISO/IEC Guide 65 by the American National Standards Institute (ANSI) in all scopes of FCC Rules and all Industry Canada Standards (RSS).

- PCTEST facility is an IC registered (IC-2451) test laboratory with the site description on file at Industry Canada.
- PCTEST is a CTIA Authorized Test Laboratory (CATL) for AMPS and CDMA, and EvDO mobile phones.
- PCTEST is a CTIA Authorized Test Laboratory (CATL) for Over-the-Air (OTA) Antenna Performance testing for AMPS, CDMA, GSM, GPRS, EGPRS, UMTS (W-CDMA), CDMA 1xEVDO Data, CDMA 1xRTT Data

© 2011 PCTEST Engineering Laboratory, Inc.

3 SAR MEASUREMENT SETUP

3.1 Robotic System

Measurements are performed using the DASY4 automated dosimetric assessment system. The DASY4 is made by Schmid & Partner Engineering AG (SPEAG) in Zurich, Switzerland and consists of a high precision robotics system (Staubli), robot controller, desktop computer, near-field probe, probe alignment sensor, and the SAM phantom containing the head or body equivalent material. The robot is a six-axis industrial robot, performing precise movements to position the probe to the location (points) of maximum electromagnetic field (EMF) (see Figure 3-1).

3.2 System Hardware

A cell controller system contains the power supply, robot controller, teach pendant (Joystick), and a remote control used to drive the robot motors. The PC consists of the SAR Measurement Software DASY4, A/D interface card, monitor, mouse, and keyboard. The Staubli Robot is connected to the cell controller to allow software manipulation of the robot. A data acquisition electronic (DAE) circuit that performs the signal amplification, signal multiplexing, A/D conversion, offset measurements, mechanical surface detection, collision detection, etc. is connected to the Electro-optical coupler (EOC). The EOC performs the conversion from the optical into digital electric signal from the DAE and transfers data to the PC card.

3.3 System Electronics

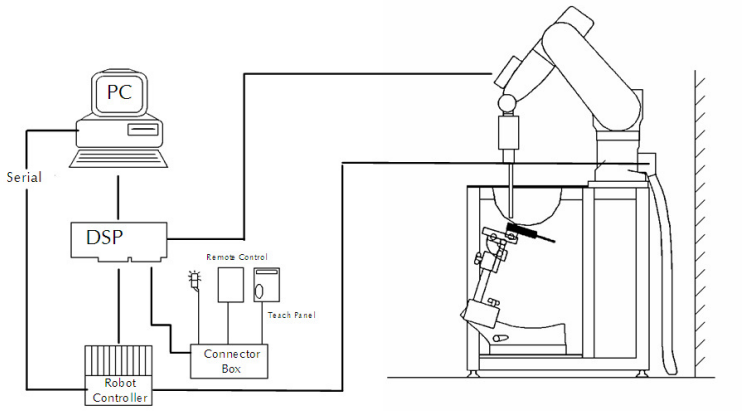

Figure 3-1
SAR Measurement System Setup

The DAE consists of a highly sensitive electrometer-grade auto-zeroing preamplifier, a channel and gain-switching multiplexer, a fast 16 bit AD-converter and a command decoder and control logic unit. Transmission to the PC-card is accomplished through an optical downlink for data and status information and an optical uplink for commands and clock lines. The mechanical probe mounting device includes two different sensor systems for frontal and sidewise probe contacts. They are also used for mechanical surface detection and probe collision detection. The robot uses its own controller with a built in VME-bus computer.

© 2011 PCTEST Engineering Laboratory, Inc.

3.4 Automated Test System Specifications

Test Software: SPEAG DASY4 version 4.7 Measurement Software
Robot: Stäubli Unimation Corp. Robot RX60L
Repeatability: 0.02 mm
No. of Axes: 6

Data Acquisition Electronic System (DAE)

Data Converter
Features: Signal Amplifier, multiplexer, A/D converter & control logic
Software: SEMCAD software
Connecting Lines: Optical Downlink for data and status info
Optical upload for commands and clock

PC Interface Card
Function: Link to DAE
16-bit A/D converter for surface detection system
Two Serial & Ethernet link to robotics
Direct emergency stop output for robot

Phantom
Type: SAM Twin Phantom (V4.0)
Shell Material: Composite
Thickness: 2.0 ± 0.2 mm

Figure 3-2
SAR Measurement System

© 2011 PCTEST Engineering Laboratory, Inc.

4 DASY E-FIELD PROBE SYSTEM

4.1 Probe Measurement System

Figure 4-1
SAR System

The SAR measurements were conducted with the dosimetric probe designed in the classical triangular configuration (see Figure 4-3) and optimized for dosimetric evaluation [9]. The probe is constructed using the thick film technique; with printed resistive lines on ceramic substrates. The probe is equipped with an optical multi-fiber line ending at the front of the probe tip. It is connected to the EOC box on the robot arm and provides an automatic detection of the phantom surface. Half of the fibers are connected to a pulsed infrared transmitter, the other half to a synchronized receiver. As the probe approaches the surface, the reflection from the surface produces a coupling from the transmitting to the receiving fibers. This reflection increases first during the approach, reaches maximum and then decreases. If the probe is flatly touching the surface, the coupling is zero. The distance of the coupling maximum to the surface is independent of the surface reflectivity and largely independent of the surface to probe angle. The DASY4 software reads the reflection during a software approach and looks for the maximum using a 2nd order curve fitting (see Figure 5-1). The approach is stopped at reaching the maximum.

4.2 Probe Specifications

Model(s):	ES3DV2, ES3DV3, EX3DV4
Frequency Range:	10 MHz – 6.0 GHz (EX3DV4) 10 MHz – 4 GHz (ES3DV3)
Calibration:	In head and body simulating tissue at Frequencies from 300 up to 6000MHz
Linearity:	± 0.2 dB (30 MHz to 6 GHz) for EX3DV4 ± 0.2 dB (30 MHz to 4 GHz) for ES3DV3
Dynamic Range:	10 mW/kg – 100 W/kg
Probe Length:	330 mm
Probe Tip Length:	20 mm
Body Diameter:	12 mm
Tip Diameter:	2.5 mm (3.9mm for ES3DV3)
Tip-Center:	1 mm (2.0 mm for ES3DV3)
Application:	SAR Dosimetry Testing Compliance tests of mobile phones Dosimetry in strong gradient fields

Figure 4-2
Near-Field Probe

Figure 4-3
Triangular Probe Configuration

© 2011 PCTEST Engineering Laboratory, Inc.

5 PROBE CALIBRATION PROCESS

5.1 Dosimetric Assessment Procedure

Each E-Probe/Probe Amplifier combination has unique calibration parameters. A TEM cell calibration procedure is conducted to determine the proper amplifier settings to enter in the probe parameters. The amplifier settings are determined for a given frequency by subjecting the probe to a known E-field density (1 mW/cm^2) using an RF Signal generator, TEM cell, and RF Power Meter.

5.2 Free Space Assessment

The free space E-field from amplified probe outputs is determined in a test chamber. This calibration can be performed in a TEM cell if the frequency is below 1 GHz and in a waveguide or other methodologies above 1 GHz for free space. For the free space calibration, the probe is placed in the volumetric center of the cavity and at the proper orientation with the field. The probe is rotated 360 degrees until the three channels show the maximum reading. The power density readings equates to 1 mW/cm^2.

5.3 Temperature Assessment

E-field temperature correlation calibration is performed in a flat phantom filled with the appropriate simulated head tissue. The E-field in the medium correlates with the temperature rise in the dielectric medium. For temperature correlation calibration a RF transparent thermistor-based temperature probe is used in conjunction with the E-field probe.

$$SAR = C\frac{\Delta T}{\Delta t}$$

where:

Δt = exposure time (30 seconds),
C = heat capacity of tissue (brain or muscle),
ΔT = temperature increase due to RF exposure.

$$SAR = \frac{|E|^2 \cdot \sigma}{\rho}$$

where:

σ = simulated tissue conductivity,
ρ = Tissue density (1.25 g/cm^3 for brain tissue)

SAR is proportional to $\Delta T/\Delta t$, the initial rate of tissue heating, before thermal diffusion takes place. The electric field in the simulated tissue can be used to estimate SAR by equating the thermally derived SAR to that with the E- field component.

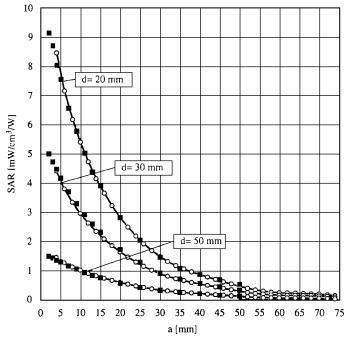

Figure 5-1 E-Field and Temperature measurements at 900MHz [9]

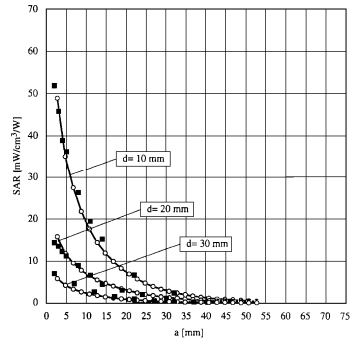

Figure 5-2 E-Field and temperature measurements at 1.9GHz [9]

© 2011 PCTEST Engineering Laboratory, Inc.

6 PHANTOM AND EQUIVALENT TISSUES

6.1 SAM Phantoms

Figure 6-1
SAM Phantoms

The SAM Twin Phantom V4.0 is constructed of a fiberglass shell integrated in a table. The shape of the shell is based on data from an anatomical study designed to represent the 90th percentile of the population [12][13]. The phantom enables the dosimetric evaluation of SAR for both left and right handed handset usage, as well as body-worn usage using the flat phantom region. Reference markings on the Phantom allow the complete setup of all predefined phantom positions and measurement grids by manually teaching three points in the robot. The shell phantom has a 2mm shell thickness (except the ear region where shell thickness increases to 6 mm).

6.2 Tissue Simulating Mixture Characterization

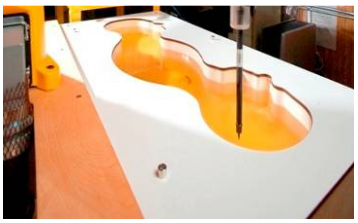

Figure 6-2
SAM Phantom with Simulating Tissue

The mixture is characterized to obtain proper dielectric constant (permittivity) and conductivity of the tissue of interest. The tissue dielectric parameters recommended in IEEE 1528 and IEC 62209 have been used as targets for the compositions, and are to match within 5%, per the FCC recommendations.

Table 6-1
Composition of the Tissue Equivalent Matter

Frequency (MHz)	835	835	1750	1750	1900	1900	2450	2450
Tissue	Head	Body	Head	Body	Head	Body	Head	Body
Ingredients (% by weight)								
Bactericide	0.1	0.1						
DGBE			47	31	44.92	29.44	7.99	26.7
HEC	1	1						
NaCl	1.45	0.94	0.4	0.2	0.18	0.39	0.16	0.1
Sucrose	57	44.9						
Triton X-100							19.97	
Water	40.45	53.06	52.6	68.8	54.9	70.17	71.88	73.2

© 2011 PCTEST Engineering Laboratory, Inc.

7 DOSIMETRIC ASSESSMENT & PHANTOM SPECS

7.1 Measurement Procedure

The evaluation was performed using the following procedure:

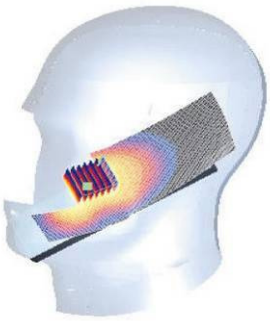

Figure 7-1
Sample SAR Area Scan

1. The SAR distribution at the exposed side of the head was measured at a distance no greater than 5.0 mm from the inner surface of the shell. The area covered the entire dimension of the head and the horizontal grid spacing was 15mm x 15mm.
2. The point SAR measurement was taken at the maximum SAR region determined from Step 1 to enable the monitoring of SAR fluctuations/drifts during testing the 1 gram cube. This fixed point was measured and used as a reference value.
3. Based on the area scan data, the area of the maximum absorption was determined by spline interpolation. Around this point, a volume of 32mm x 32mm x 30mm (fine resolution volume scan, zoom scan) was assessed by measuring 5 x 5 x 7 points. On this basis of this data set, the spatial peak SAR value was evaluated with the following procedure (see references or the DASY manual for more details):
   a. The data was extrapolated to the surface of the outer-shell of the phantom. The combined distance extrapolated was the combined distance from the center of the dipoles 2.7mm away from the tip of the probe housing plus the 1.2 mm distance between the surface and the lowest measuring point. The extrapolation was based on a least-squares algorithm. A polynomial of the fourth order was calculated through the points in the z-axis (normal to the phantom shell).
   b. After the maximum interpolated values were calculated between the points in the cube, the SAR was averaged over the spatial volume (1g or 10g) using a 3D-Spline interpolation algorithm. The 3D-spline is composed of three one-dimensional splines with the “Not a knot” condition (in x, y, and z directions). The volume was then integrated with the trapezoidal algorithm. One thousand points (10 x 10 x 10) were obtained through interpolation, in order to calculate the averaged SAR.
   c. All neighboring volumes were evaluated until no neighboring volume with a higher average value was found.
4. The SAR reference value, at the same location as step 2, was re-measured after the zoom scan was complete. If the value deviated by more than 5%, the evaluation was repeated.

7.2 Specific Anthropomorphic Mannequin (SAM) Specifications

The phantom for handset SAR assessment testing is a low-loss dielectric shell, with shape and dimensions derived from the anthropometric data of the 90th percentile adult male head dimensions as tabulated by the US Army. The SAM Twin Phantom shell is bisected along the mid-sagittal plane into right and left halves (see Figure 7-2). The perimeter sidewalls of each phantom halves are extended to allow filling with liquid to a depth that is sufficient to minimize reflections from the upper surface. The liquid depth is maintained at a minimum depth of 15 cm.

Figure 7-2
SAM Twin Phantom Shell

© 2011 PCTEST Engineering Laboratory, Inc.

8 DEFINITION OF REFERENCE POINTS

8.1 EAR REFERENCE POINT

Figure 8-1 shows the front, back and side views of the SAM Twin Phantom. The point "M" is the reference point for the center of the mouth, "LE" is the left ear reference point (ERP), and "RE" is the right ERP. The ERP is 15mm posterior to the entrance to the ear canal (EEC) along the B-M line (Back-Mouth), as shown in Figure 8-1. The plane passing through the two ear canals and M is defined as the Reference Plane. The line N-F (Neck-Front) is perpendicular to the reference plane and passing through the RE (or LE) is called the Reference Pivoting Line (see Figure 8-2
Front, back and side view of SAM Twin PhantomFigure 8-2). Line B-M is perpendicular to the N-F line. Both N-F and B-M lines are marked on the external phantom shell to facilitate handset positioning [5].

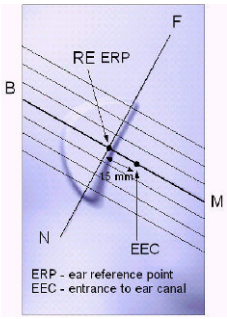

Figure 8-1
Close-Up Side view of ERP

8.2 HANDSET REFERENCE POINTS

Two imaginary lines on the handset were established: the vertical centerline and the horizontal line. The test device was placed in a normal operating position with the "test device reference point" located along the "vertical centerline" on the front of the device aligned to the "ear reference point" (See Figure 8-3). The "test device reference point" was than located at the same level as the center of the ear reference point. The test device was positioned so that the "vertical centerline" was bisecting the front surface of the handset at it's top and bottom edges, positioning the "ear reference point" on the outer surface of the both the left and right head phantoms on the ear reference point.

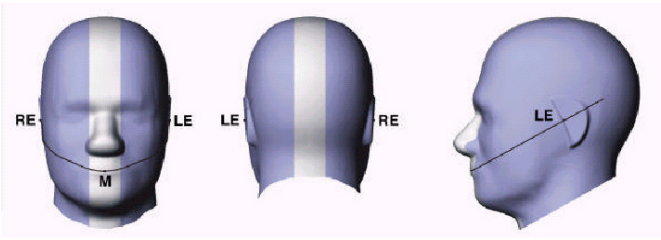

Figure 8-2
Front, back and side view of SAM Twin Phantom

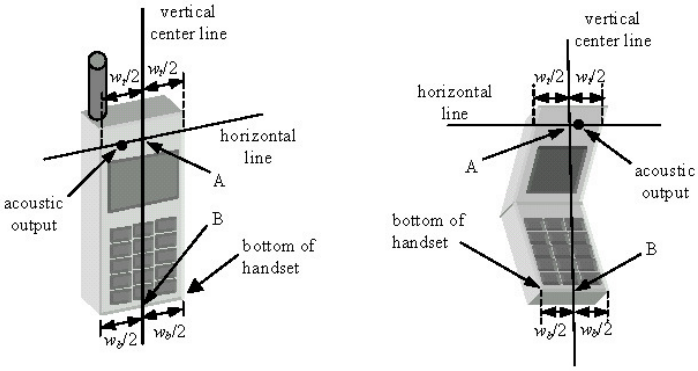

Figure 8-3
Handset Vertical Center & Horizontal Line Reference Points

© 2011 PCTEST Engineering Laboratory, Inc.

9 TEST CONFIGURATION POSITIONS

9.1 Device Holder

The DASY device holder has been made out of low-loss POM material having the following dielectric parameters: relative permittivity ε = 3 and loss tangent δ = 0.02.

9.2 Positioning for Cheek/Touch

1. The test device was positioned with the handset close to the surface of the phantom such that point A is on the (virtual) extension of the line passing through points RE and LE on the phantom (see Figure 9-1), such that the plane defined by the vertical center line and the horizontal line of the phone is approximately parallel to the sagittal plane of the phantom.

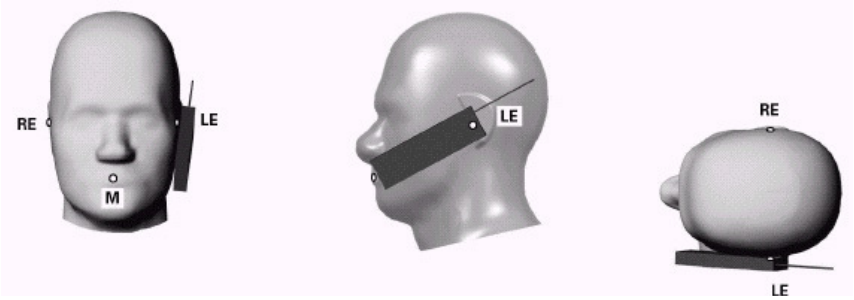

Figure 9-1 Front, Side and Top View of Cheek/Touch Position

2. The handset was translated towards the phantom along the line passing through RE & LE until the handset touches the ear.
3. While maintaining the handset in this plane, the handset was rotated around the LE-RE line until the vertical centerline was in the plane normal to MB-NF including the line MB (reference plane).
4. The phone was hen rotated around the vertical centerline until the phone (horizontal line) was symmetrical was respect to the line NF.
5. While maintaining the vertical centerline in the reference plane, keeping point A on the line passing through RE and LE, and maintaining the phone contact with the ear, the handset was rotated about the line NF until any point on the handset made contact with a phantom point below the ear (cheek) (See Figure 9-2).

9.3 Positioning for Ear / 15º Tilt

With the test device aligned in the “Cheek/Touch Position”:

1. While maintaining the orientation of the phone, the phone was retracted parallel to the reference plane far enough to enable a rotation of the phone by 15degree.
2. The phone was then rotated around the horizontal line by 15 degree.
3. While maintaining the orientation of the phone, the phone was moved parallel to the reference plane until any part of the phone touches the head. (In this position, point A was located on the line RE-LE). The tilted position is obtained when the contact is on the pinna. If the contact was at any location other than the pinna, the angle of the phone would then be reduced. The tilted position was obtained when any part of the phone was in contact of the ear as well as a second part of the phone was in contact with the head (see Figure 9-2).

© 2011 PCTEST Engineering Laboratory, Inc.

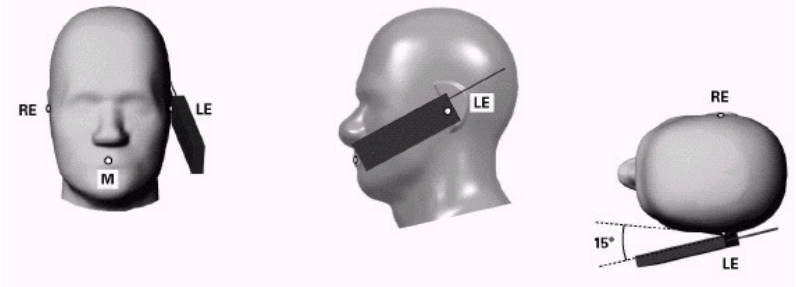

Figure 9-2 Front, Side and Top View of Ear/15º Tilt Position

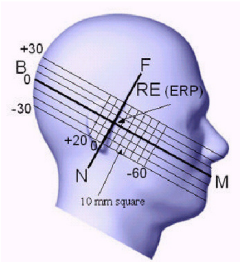

Figure 9-3
Side view w/ relevant markings

Figure 9-4 Body SAR Sample Photo
(Not Actual EUT)

9.4 SAR Evaluations near the Mouth/Jaw Regions of the SAM Phantom

Antennas located near the bottom of a phone may require SAR measurements around the mouth and jaw regions of the SAM head phantom. This typically applies to clam-shell style phones that are generally longer in the unfolded normal use positions or to certain older style long rectangular phones. It has been known for some time that there are SAR measurement difficulties in these regions of the SAM phantom. SAR probes are calibrated in tissue equivalent liquids with sufficient separation between the probe sensors and nearby physical boundaries to ensure scattering does not affect probe calibration. When the probe tip is moved into tight regions with multiple boundaries surrounding its sensors, probe calibration and measurement accuracy can become questionable. In addition, these measurement locations often require a probe to be tilted at steep angles, where it may no longer comply with calibration requirements and measurement protocols, or satisfy the required measurement uncertainty. In some situations it is not feasible to tilt the probe or rotate the phantom, as suggested by measurement standards, to conduct these measurements.

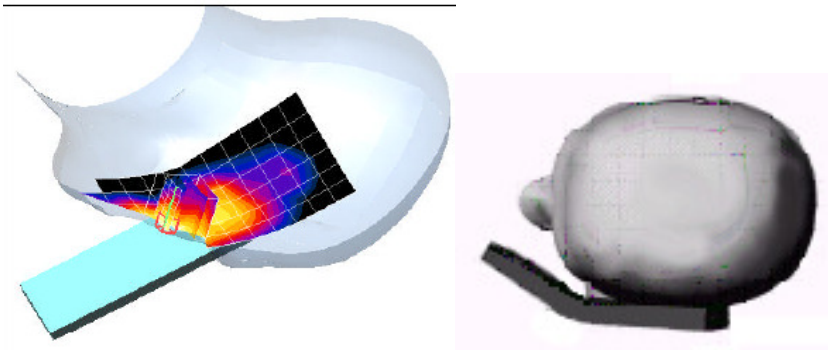

Figure 9-5
SAR Scans near the Jaw/Mouth

In order to ensure there is sufficient conservativeness for ensuring compliance until practical solutions are available, additional measurement considerations are necessary to address these technical difficulties. When measurements are required near the mouth, nose, jaw or similar tight regions of the SAM phantom,

© 2011 PCTEST Engineering Laboratory, Inc.

area or zoom scans are often unable to fully enclose the peak SAR location as required by IEEE 1528 and Supplement C, due to probe orientation and positioning difficulties. Even when limited measurements are possible, the test results could be questionable due to probe calibration and measurement uncertainty issues. Under these circumstances, the following procedures apply, adopted from the FCC guidance on SAR handsets document publication 648474. The SAR required in these regions of SAM should be measured using a flat phantom. **Rectangular shaped phones** should be positioned with its bottom edge positioned from the flat phantom with the same distance provided by the cheek touching position using SAM. The ear reference point (ERP, as defined for SAM) of the phone should be positioned ½ cm from the flat phantom shell. **Clam-shell phones** should be positioned with the hinge against a smooth edge of the flat phantom where the upper half of the phone is unfolded and extended beyond the phantom side wall. The lower half of the phone is secured in the test device holder at a fixed distance below the flat phantom determined by the minimum separation along the lower edge of the phone in the cheek touching position using SAM. Any case with substantial variation in separation distance along the lower edge of a clam shell is discussed with the FCC for best-to-use methodology.

The flat phantom data should allow test results to be compared uniformly across measurement systems, until suitable solutions are available in measurement standards to address certain probe calibration and positioning issues, due to implementation differences between horizontal and upright SAM configurations. These flat phantom procedures are only applicable for stand-alone SAR evaluation in tight regions of the SAM phantom, where measurement is not feasible or test results can be questionable due to probe calibration and accessibility issues. Details on device positioning and photos showing how separation distances are determined are included in the SAR report Photographs. SAR for other regions of the head must be evaluated using SAM; therefore, a phone with antennas at different locations may require flat and SAM phantom evaluation for the different antennas.

9.5 Body Holster /Belt Clip Configurations

Body-worn operating configurations are tested with the belt-clips and holsters attached to the device and positioned against a flat phantom in a normal use configuration (see Figure 9-4). A device with a headset output is tested with a headset connected to the device.

Accessories for Body-worn operation configurations are divided into two categories: those that do not contain metallic components and those that do contain metallic components. When multiple accessories that do not contain metallic components are supplied with the device, the device is tested with only the accessory that dictates the closest spacing to the body. Then multiple accessories that contain metallic components are tested with the device with each accessory. If multiple accessories share an identical metallic component (i.e. the same metallic belt-clip used with different holsters with no other metallic components) only the accessory that dictates the closest spacing to the body is tested.

Body-worn accessories may not always be supplied or available as options for some devices intended to be authorized for body-worn use. In this case, a test configuration with a separation distance between the back of the device and the flat phantom is used. Test position spacing was documented. Transmitters that are designed to operate in front of a person's face, as in push-to-talk configurations, are tested for SAR compliance with the front of the device positioned to face the flat phantom in head fluid. For devices that are carried next to the body such as a shoulder, waist or chest-worn transmitters, SAR compliance is tested with the accessories, including headsets and microphones, attached to the device and positioned against a flat phantom in a normal use configuration.

© 2011 PCTEST Engineering Laboratory, Inc.

10 FCC RF EXPOSURE LIMITS

10.1 Uncontrolled Environment

UNCONTROLLED ENVIRONMENTS are defined as locations where there is the exposure of individuals who have no knowledge or control of their exposure. The general population/uncontrolled exposure limits are applicable to situations in which the general public may be exposed or in which persons who are exposed as a consequence of their employment may not be made fully aware of the potential for exposure or cannot exercise control over their exposure. Members of the general public would come under this category when exposure is not employment-related; for example, in the case of a wireless transmitter that exposes persons in its vicinity.

10.2 Controlled Environment

CONTROLLED ENVIRONMENTS are defined as locations where there is exposure that may be incurred by persons who are aware of the potential for exposure, (i.e. as a result of employment or occupation). In general, occupational/controlled exposure limits are applicable to situations in which persons are exposed as a consequence of their employment, who have been made fully aware of the potential for exposure and can exercise control over their exposure. This exposure category is also applicable when the exposure is of a transient nature due to incidental passage through a location where the exposure levels may be higher than the general population/uncontrolled limits, but the exposed person is fully aware of the potential for exposure and can exercise control over his or her exposure by leaving the area or by some other appropriate means.

Table 10-1
SAR Human Exposure Specified in ANSI/IEEE C95.1-1992 and Health Canada Safety Code 6

HUMAN EXPOSURE LIMITS		
	UNCONTROLLED ENVIRONMENT *General Population* (W/kg) or (mW/g)	CONTROLLED ENVIRONMENT *Occupational* (W/kg) or (mW/g)
SPATIAL PEAK SAR Brain	1.6	8.0
SPATIAL AVERAGE SAR Whole Body	0.08	0.4
SPATIAL PEAK SAR Hands, Feet, Ankles, Wrists	4.0	20

1. The Spatial Peak value of the SAR averaged over any 1 gram of tissue (defined as a tissue volume in the shape of a cube) and over the appropriate averaging time.
2. The Spatial Average value of the SAR averaged over the whole body.
3. The Spatial Peak value of the SAR averaged over any 10 grams of tissue (defined as a tissue volume in the shape of a cube) and over the appropriate averaging time.

© 2011 PCTEST Engineering Laboratory, Inc.

11 FCC 3G MEASUREMENT PROCEDURES

Power measurements were performed using a base station simulator under digital average power.

11.1 Procedures Used to Establish RF Signal for SAR HSPA Devices

The following procedures are applicable to HSDPA data devices operating under 3GPP Release 5. Body exposure conditions are typically applicable to these devices, including handsets and data modems operating in various electronic devices. HSDPA operates in conjunction with WCDMA and requires an active DPCCH. The default test configuration is to measure SAR in WCDMA without HSDPA, with an established radio link between the DUT and a communication test set using a 12.2 kbps RMC configured in Test Loop Mode 1; and test HSDPA within FRC and a 12.2 kbps RMC using the highest SAR configuration in WCDMA. SAR is selectively confirmed for other physical channel configurations according to output power, exposure conditions and device operating capabilities. Maximum output power is verified according to 3GPP TS 23.121 (Release 5) and SAR must be measured according to these maximum output conditions.

The handset was placed into a simulated call using a base station simulator in a shielded chamber. Such test signals offer a consistent means for testing SAR and are recommended for evaluating SAR [4]. SAR measurements were taken with a fully charged battery. In order to verify that the device was tested and maintained at full power, this was configured with the base station simulator. The SAR measurement software calculates a reference point at the start and end of the test to check for power drifts. If conducted power deviations of more than 5% occurred, the tests were repeated.

11.2 SAR Measurement Conditions for HSDPA Data Devices

11.2.1 Output Power Verification

Maximum output power is verified on the High, Middle and Low channels according to the general descriptions in section 5.2 of 3GPP TS 34.121 (release 5), using the appropriate RMC with TPC (transmit power control) set to all “1s”. Results for all applicable physical channel configurations (DPCCH, DPDCHn and spreading codes, HS-DPCCH) is tabulated in the test report. All configurations that are not supported by the DUT or cannot be measured due to technical or equipment limitations is identified.

11.2.2 Head SAR Measurements (if VoIP applicable)

SAR for head exposure configurations is measured using the 12.2 kbps RMC with TPC bits configured to all “1s”. SAR in AMR configurations is not required when the maximum average output of each RF channel for 12.2 kbps AMR is less than ¼ dB higher than that measured in 12.2 kbps RMC. Otherwise, SAR is measured on the maximum output channel in 12.2 AMR with a 3.4 kbps SRB (signaling radio bearer) using the exposure configuration that results in the highest SAR for that RF channel in 12.2 RMC.

11.2.3 Body SAR Measurements

SAR for body exposure configurations is measured using the 12.2 kbps RMC with the TPC bits configured to all “1s”. In addition, body SAR is also measured in HSDPA with an FRC, together with a 12.2 kbps RMC configured in Test Loop Mode 1, using the highest body SAR configuration in 12.2 kbps RMC without HSDPA.

The H-set used in FRC for HSDPA should be configured according to the UE category of a test device. The number of HS-DSCH/HSPDSCHs, HARQ processes, minimum inter-TTI interval, transport block sizes and RV coding sequence are defined by the applicable H-set. To maintain a consistent test configuration and stable transmission conditions, QPSK is used in the FRC for

© 2011 PCTEST Engineering Laboratory, Inc.

SAR testing. HS-DPCCH should be configured with a CQI feedback cycle of 2 ms to maintain a constant rate of active CQI slots. DPCCH and DPDCH gain factors of βc=9 and βd=15, and power offset parameters of ΔACK= ΔNACK =5 and ΔCQI=2 is used. The CQI value is determined by the UE category, transport block size, number of HS-PDSCHs and modulation used in the FRC.

11.3 SAR Measurement Conditions for HSPA Data Devices

11.3.1 Body SAR Measurements

When voice transmission and head exposure conditions are applicable to a WCDMA/HSPA data device, head exposure is measured according to the 'Head SAR Measurements' procedures in the 'WCDMA Handsets' section of the FCC 3G document. SAR for body exposure configurations are measured according to the 'Body SAR Measurements' procedures in the 'WCDMA Handsets' section of the FCC 3G document. In addition, body SAR is also measured for HSPA when the maximum average output of each RF channel with HSPA active is at least ¼ dB higher than that measured without HSPA using 12.2 kbps RMC or the maximum SAR for 12.2 kbps RMC is above 75% of the SAR limit. Body SAR for HSPA is measured with E-DCH Sub-test 5, using H-Set 1 and QPSK for FRC and a 12.2 kbps RMC configured in Test Loop Mode 1 with power control algorithm 2, according to the highest body SAR configuration in 12.2 kbps RMC without HSPA. When VOIP is applicable for head exposure, SAR is not required when the maximum output of each RF channel with HSPA is less than ¼ dB higher than that measured using 12.2 kbps RMC; otherwise, the same HSPA configuration used for body measurements should be used to test for head exposure.

Due to inner loop power control requirements in HSPA, a commercial communication test set should be used for the output power and SAR tests. The 12.2 kbps RMC, FRC H-set 1 and EDCH configurations for HSPA should be configured according to the β values indicated below as well as other applicable procedures described in the 'WCDMA Handset' and 'Release 5 HSDPA Data Devices' sections of the FCC 3G document.

Sub-test	β_c	β_d	β_d (SF)	β_c/β_d	β_{hs} (1)	β_{ec}	β_{ed}	β_{ed} (SF)	β_{ed} (codes)	CM(2) (dB)	MPR (dB)	AG(4) Index	E-TFCI
1	11/15(3)	15/15(3)	64	11/15(3)	22/15	209/225	1039/225	4	1	1.0	0.0	20	75
2	6/15	15/15	64	6/15	12/15	12/15	94/75	4	1	3.0	2.0	12	67
3	15/15	9/15	64	15/9	30/15	30/15	β_{ed1}: 47/15 β_{ed2}: 47/15	4	2	2.0	1.0	15	92
4	2/15	15/15	64	2/15	4/15	2/15	56/75	4	1	3.0	2.0	17	71
5	15/15(4)	15/15(4)	64	15/15(4)	30/15	24/15	134/15	4	1	1.0	0.0	21	81

Note 1: Δ_{ACK}, Δ_{NACK} and $\Delta_{CQI} = 8 \Leftrightarrow A_{hs} = \beta_{hs}/\beta_c = 30/15 \Leftrightarrow \beta_{hs} = 30/15 * \beta_c$.
Note 2: CM = 1 for β_c/β_d =12/15, β_{hs}/β_c=24/15. For all other combinations of DPDCH, DPCCH, HS- DPCCH, E-DPDCH and E-DPCCH the MPR is based on the relative CM difference.
Note 3: For subtest 1 the β_c/β_d ratio of 11/15 for the TFC during the measurement period (TF1, TF0) is achieved by setting the signaled gain factors for the reference TFC (TF1, TF1) to β_c = 10/15 and β_d = 15/15.
Note 4: For subtest 5 the β_c/β_d ratio of 15/15 for the TFC during the measurement period (TF1, TF0) is achieved by setting the signaled gain factors for the reference TFC (TF1, TF1) to β_c = 14/15 and β_d = 15/15.
Note 5: Testing UE using E-DPDCH Physical Layer category 1 Sub-test 3 is not required according to TS 25.306 Table 5.1g.
Note 6: β_{ed} can not be set directly; it is set by Absolute Grant Value.

© 2011 PCTEST Engineering Laboratory, Inc.

11.4 RF Conducted Powers

11.4.1 GSM Conducted Powers

11-1 GSM RF Conducted Powers with Hotspot Disabled

		RF Conducted Power Table				
		Voice	*GPRS Data*		*EDGE Data*	
Band	**Channel**	**GSM [dBm] (GMSK) CS (1 Slot)**	**GPRS [dBm] (GMSK) 1 Tx Slot**	**GPRS [dBm] (GMSK) 2 Tx Slot**	**EDGE [dBm] (8-PSK) 1 Tx Slot**	**EDGE [dBm] (8-PSK) 2 Tx Slot**
Cellular	128	33.40	33.40	30.66	25.80	24.63
	190	33.15	33.16	30.61	25.73	24.57
	251	33.23	33.25	30.51	25.60	24.51
PCS	512	30.58	30.58	28.43	24.82	23.78
	661	30.67	30.68	28.60	24.80	23.71
	810	30.31	30.29	28.55	24.84	23.80

11-2 GSM RF Conducted Powers with Hotspot Enabled

		RF Conducted Power Table with Back-off				
		Voice	*GPRS Data*		*EDGE Data*	
Band	**Channel**	**GSM [dBm] (GMSK) CS (1 Slot)**	**GPRS [dBm] (GMSK) 1 Tx Slot**	**GPRS [dBm] (GMSK) 2 Tx Slot**	**EDGE [dBm] (8-PSK) 1 Tx Slot**	**EDGE [dBm] (8-PSK) 2 Tx Slot**
Cellular	128	31.20	31.21	28.80	25.36	24.24
	190	31.11	31.17	28.81	25.28	24.16
	251	31.04	31.04	28.46	25.15	24.09
PCS	512	28.33	28.47	26.40	24.78	23.39
	661	28.49	28.58	26.37	24.36	23.35
	810	28.40	28.50	26.45	24.42	23.40

GSM Class: B
GPRS Multislot class: 10 (max 2 Tx Uplink slots)
EDGE Multislot class: 10 (max 2Tx Uplink slots)
DTM Multislot Class: N/A

All Hotspot SAR testing was performed at reduced power tuned by the manufacturer. WIFI was disabled via a manufacturer software patch (not available to end-users) for all hotspot SAR testing to ensure a single transmitter was active during hotspot modes. The reduced powers were confirmed via conducted power measurements at the RF port when the user interface selection “Portable WIFI hotspot” was selected. Detailed description of the Hotspot power reduction implementation is included on the operational description. Powers are reduced immediately when hotspot is activated via the user interface. Powers will stay permanently reduced until the user deactivates hotspot. This was confirmed prior to SAR tests.

Power Reduction does not apply to EDGE.

© 2011 PCTEST Engineering Laboratory, Inc.

11.4.2 HSPA Conducted Powers

11-3 HSPA RF Conducted Powers with Hotspot Disable

3GPP Release Version	Mode	3GPP 34.121 Subtest	AWS Band			βc	βd
			1312	1412	1862		
99	WCDMA	12.2 kbps RMC	23.85	23.91	**24.01**	-	-
99		12.2 kbps AMR	23.89	23.89	23.90	-	-
6	HSDPA	Subtest 1	**23.82**	23.80	23.80	2	15
6		Subtest 2	23.65	**23.82**	23.69	11	15
6		Subtest 3	22.93	23.23	23.15	15	8
6		Subtest 4	22.95	23.22	23.17	15	4
6	HSUPA	Subtest 1	23.07	22.52	22.42	10	15
6		Subtest 2	21.85	21.85	21.92	6	15
6		Subtest 3	22.34	22.60	22.97	15	9
6		Subtest 4	21.19	22.41	22.30	2	15
6		Subtest 5	22.77	**23.56**	23.55	14	15

11-4 HSPA RF Conducted Powers with Hotspot Enabled

3GPP Release Version	Mode	3GPP 34.121 Subtest	AWS Band with Back-off			βc	βd
			1312	1412	1862		
99	WCDMA	12.2 kbps RMC	21.94	21.97	22.00	-	-
99		12.2 kbps AMR	21.93	21.93	22.00	-	-
6	HSDPA	Subtest 1	21.86	21.93	21.95	2	15
6		Subtest 2	21.79	21.97	21.81	11	15
6		Subtest 3	21.12	21.46	21.16	15	8
6		Subtest 4	20.97	21.37	21.35	15	4
6	HSUPA	Subtest 1	21.90	21.91	21.97	10	15
6		Subtest 2	19.78	3.00	20.13	6	15
6		Subtest 3	20.63	20.65	20.47	15	9
6		Subtest 4	20.71	20.54	20.42	2	15
6		Subtest 5	21.46	21.50	21.51	14	15

Note: It is expected by the manufacturer that MPR for some HSUPA subtests may be up to 1 dB more than specified by 3GPP, but also as low as 0 dB according to the chipset implementation in this model.

All Hotspot SAR testing was performed at reduced power tuned by the manufacturer. WIFI was disabled via a manufacturer software patch (not available to end-users) for all hotspot SAR testing to ensure a single transmitter was active during hotspot modes. The reduced powers were confirmed via conducted power measurements at the RF port when the user interface selection “Portable WIFI hotspot” was selected. Detailed description of the Hotspot power reduction implementation is included on the operational description. Powers are reduced immediately when hotspot is activated via the user interface. Powers will stay permanently reduced until the user deactivates hotspot. This was confirmed prior to SAR tests.

Figure 11-1
Power Measurement Setup

© 2011 PCTEST Engineering Laboratory, Inc.

12 SAR TESTING WITH IEEE 802.11 TRANSMITTERS

Normal network operating configurations are not suitable for measuring the SAR of 802.11 a/b/g transmitters. Unpredictable fluctuations in network traffic and antenna diversity conditions can introduce undesirable variations in SAR results. The SAR for these devices should be measured using chipset based test mode software to ensure the results are consistent and reliable.

12.1 General Device Setup

Chipset based test mode software is hardware dependent and generally varies among manufacturers. The device operating parameters established in test mode for SAR measurements must be identical to those programmed in production units, including output power levels, amplifier gain settings and other RF performance tuning parameters. The test frequencies should correspond to actual channel frequencies defined for domestic use. SAR for devices with switched diversity should be measured with only one antenna transmitting at a time during each SAR measurement, according to a fixed modulation and data rate. The same data pattern should be used for all measurements.

12.2 Frequency Channel Configurations [27]

802.11 a/b/g and 4.9 GHz operating modes are tested independently according to the service requirements in each frequency band. 802.11 b/g modes are tested on channels 1, 6 and 11. 802.11a is tested for UNII operations on channels 36 and 48 in the 5.15-5.25 GHz band; channels 52 and 64 in the 5.25-5.35 GHz band; channels 104, 116, 124 and 136 in the 5.470-5.725 GHz band; and channels 149 and 161 in the 5.8 GHz band. When 5.8 GHz §15.247 is also available, channels 149, 157 and 165 should be tested instead of the UNII channels. 4.9 GHz is tested on channels 1, 10 and 5 or 6, whichever has the higher output power, for 5 MHz channels; channels 11, 15 and 19 for 10 MHz channels; and channels 21 and 25 for 20 MHz channels. These are referred to as the "default test channels". 802.11g mode was evaluated only if the output power was 0.25 dB higher than the 802.11b mode.

Table 12-1
802.11 Test Channels per FCC Requirements

Mode		GHz	Channel	Turbo Channel	"Default Test Channels" §15.247 802.11b	§15.247 802.11g	UNII	
802.11 b/g		2.412	1		√	∇		
		2.437	6	6	√	∇		
		2.462	11		√	∇		
802.11a	UNII	5.18	36				√	
		5.20	40	42 (5.21 GHz)				*
		5.22	44					*
		5.24	48	50 (5.25 GHz)			√	
		5.26	52				√	
		5.28	56	58 (5.29 GHz)				*
		5.30	60					*
		5.32	64				√	
		5.500	100	Unknown				*
		5.520	104				√	
		5.540	108					*
		5.560	112					*
		5.580	116				√	
		5.600	120					*
		5.620	124				√	
		5.640	128					*
		5.660	132					*
		5.680	136				√	
		5.700	140					*
	UNII or §15.247	5.745	149		√		√	
		5.765	153	152 (5.76 GHz)		*		*
		5.785	157		√			*
		5.805	161	160 (5.80 GHz)		*	√	
	§15.247	5.825	165		√			

© 2011 PCTEST Engineering Laboratory, Inc.

Table 12-2
IEEE 802.11b Average RF Power

Freq [MHz]	Channel	Data Rate [Mbps]	Average Power (dBm)
2412	1	1	16.9
		2	16.43
		5.5	16.34
		11	16.08
2437	6	1	16.92
		2	16.8
		5.5	16.16
		11	15.94
2462	11	1	17.17
		2	16.97
		5.5	16.69
		11	16.54

Table 12-3
IEEE 802.11g Average RF Power

Freq [MHz]	Channel	Data Rate [Mbps]	Average Power (dBm)
2412	1	6	14.14
		9	13.97
		12	13.93
		18	13.93
		24	13.81
		36	13.9
		48	13.81
		54	13.88
2437	6	6	14.35
		9	13.67
		12	13.65
		18	14.03
		24	13.79
		36	14.14
		48	13.88
		54	14.01
2462	11	6	14.58
		9	14.37
		12	14.3
		18	14.09
		24	13.76
		36	13.97
		48	14.2
		54	13.91

© 2011 PCTEST Engineering Laboratory, Inc.

Table 12-4
IEEE 802.11n Average RF Power

Freq [MHz]	Channel	Data Rate [Mbps]	Average Power (dBm)
2412	1	6.5/7.2	13.33
		13/14.40	12.92
		19.5/21.70	12.74
		26/28.90	12.72
		29/43.3	12.67
		52/57.80	12.84
		58.50/65	12.67
		65/72.2	12.54
2437	6	6.5/7.2	13.12
		13/14.40	13.06
		19.5/21.70	12.83
		26/28.90	12.89
		29/43.3	12.86
		52/57.80	12.84
		58.50/65	13.11
		65/72.2	12.97
2462	11	6.5/7.2	13.66
		13/14.40	13.4
		19.5/21.70	13.31
		26/28.90	13.16
		29/43.3	12.96
		52/57.80	13.36
		58.50/65	13.41
		65/72.2	13.14

Note: WLAN VoIP capability is not supported per the applicant.

Figure 12-1
Power Measurement Setup

© 2011 PCTEST Engineering Laboratory, Inc.

13 SINGLE TX SAR CONSIDERATIONS

13.1 SAR Test Configurations

Table 13-1
Mobile Hotspot Sides for SAR Testing

Mobile Hotspot Side for SAR Testing						
Mode	**Back**	**Front**	**Right**	**Left**	**Top**	**Bottom**
GPRS 850	Yes	Yes	Yes	Yes	No	Yes
GPRS 1900	Yes	Yes	Yes	Yes	No	Yes
UMTS IV	Yes	Yes	Yes	Yes	No	Yes
2.4 GHz WIFI	Yes	Yes	No	Yes	Yes	No

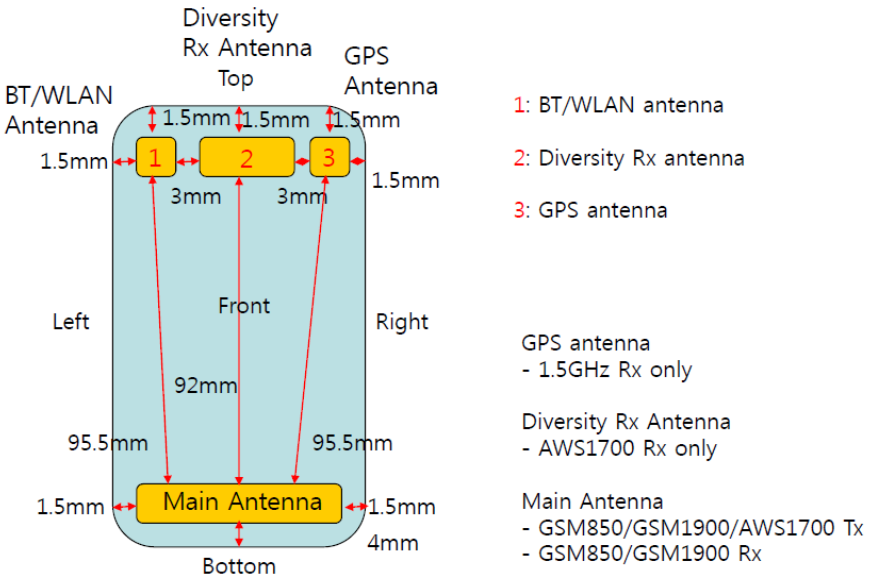

Figure 13-1 Identification of Sides for SAR Testing

Note: Per Oct 2010 TCB FCC Workshop, the edges with antennas within 2.5 cm are required to be evaluated for SAR. See Figure 13-1 for distances of the actual device.

© 2011 PCTEST Engineering Laboratory, Inc.

14 SYSTEM VERIFICATION

14.1 Tissue Verification

Table 14-1
Measured Tissue Properties

Calibrated for Tests Performed on:	Tissue Type	Measured Frequency (MHz)	Measured Conductivity, σ (S/m)	Measured Dielectric Constant, ε	TARGET Conductivity, σ (S/m)	TARGET Dielectric Constant, ε	% dev σ	% dev ε
12/13/2010	835H	820	0.862	40.05	0.898	41.571	-4.01%	-3.66%
		835	0.879	39.85	0.900	41.500	-2.33%	-3.98%
		850	0.888	39.70	0.916	41.500	-3.06%	-4.34%
12/20/2010	835B	820	0.979	55.61	0.969	55.284	1.03%	0.59%
		835	0.993	55.33	0.970	55.200	2.37%	0.24%
		850	1.006	55.20	0.988	55.154	1.82%	0.08%
12/16/2010	1750H	1710	1.344	39.74	1.348	40.136	-0.30%	-0.99%
		1750	1.381	39.60	1.370	40.100	0.80%	-1.25%
		1790	1.422	39.56	1.394	40.020	2.01%	-1.15%
12/22/2010	1750B	1710	1.491	53.02	1.460	53.540	2.12%	-0.97%
		1750	1.550	53.06	1.490	53.430	4.03%	-0.69%
		1790	1.573	52.83	1.510	53.330	4.17%	-0.94%
12/13/2010	1900H	1850	1.365	39.62	1.400	40.000	-2.50%	-0.95%
		1880	1.379	39.56	1.400	40.000	-1.50%	-1.10%
		1910	1.410	39.32	1.400	40.000	0.71%	-1.70%
12/21/2010	1900B	1850	1.475	53.62	1.520	53.300	-2.96%	0.60%
		1880	1.506	53.54	1.520	53.300	-0.92%	0.45%
		1910	1.552	53.43	1.520	53.300	2.11%	0.24%
12/23/2010	2450B	2401	1.859	50.34	1.903	52.765	-2.31%	-4.60%
		2450	1.923	50.22	1.950	52.700	-1.38%	-4.71%
		2499	1.979	50.02	2.019	52.638	-1.98%	-4.97%
02/15/2011	2450H	2401	1.834	39.85	1.758	39.298	4.32%	1.40%
		2450	1.876	39.62	1.800	39.200	4.22%	1.07%
		2499	1.944	39.38	1.852	39.135	4.97%	0.63%

Note: KDB Publication 450824 was ensured to be applied for probe calibration frequencies greater than or equal to 50 MHz of the DUT frequencies.

The above measured tissue parameters were used in the DASY software to perform interpolation via the DASY software to determine actual dielectric parameters at the test frequencies (per IEEE 1528 6.6.1.2). The SAR test plots may slightly differ from the table above since the DASY software rounds to three significant digits.

14.2 Measurement Procedure for Tissue verification

1) The network analyzer and probe system was configured and calibrated.
2) The probe was immersed in the sample which was placed in a nonmetallic container. Trapped air bubbles beneath the flange were minimized by placing the probe at a slight angle.
3) The complex admittance with respect to the probe aperture was measured
4) The complex relative permittivity , for example from the below equation (Pournaropoulos and Misra):

$$Y = \frac{j2\omega\varepsilon_r\varepsilon_0}{[\ln(b/a)]^2}\int_a^b\int_a^b\int_0^\pi \cos\phi' \frac{\exp\left[-j\omega r(\mu_0\varepsilon_r^{'}\varepsilon_0)^{1/2}\right]}{r} d\phi' d\rho' d\rho$$

where Y is the admittance of the probe in contact with the sample, the primed and unprimed coordinates refer to source and observation points, respectively, $r^2 = \rho^2 + \rho'^2 - 2\rho\rho'\cos\phi'$, ω is the angular frequency, and $j = \sqrt{-1}$.

© 2011 PCTEST Engineering Laboratory, Inc.

14.3 Justification for Extended SAR Dipole Calibrations

Usage of SAR dipoles calibrated less than 2 years ago but more than 1 year ago were confirmed in maintaining return loss (< - 20 dB, within 20% of prior calibration) and impedance (within 5 ohm from prior calibration) requirements per extended calibrations in KDB Publication 450824:

D835V2 SN: 4d026				
Date of Measurement	Return Loss (dB)	Δ %	Impedance (Ω)	ΔΩ
8/24/2009	-22.5		51	
8/19/2010	-21.4	-5%	50.1	-0.9

D1765V2 SN: 1008				
Date of Measurement	Return Loss (dB)	Δ %	Impedance (Ω)	ΔΩ
5/19/2009	-24.2		44.8	
8/19/2010	-23.2	-4%	46.5	1.7

D1900V2 SN:5d080				
Date of Measurement	Return Loss (dB)	Δ %	Impedance (Ω)	ΔΩ
8/18/2009	-24.3		50	
8/19/2010	-22.4	**-7.8%**	51	**1.0**

D2450V2 SN: 719				
Date of Measurement	Return Loss (dB)	Δ %	Impedance (Ω)	ΔΩ
8/27/2009	-28.6		53.4	
8/19/2010	-27.5	**-3.8%**	51	**-2.4**

14.4 Test System Verification

Prior to assessment, the system is verified to ±10% of the manufacturer SAR measurement on the reference dipole at the time of calibration.

Table 14-2
System Verification Results

System Verification TARGET & MEASURED										
Date:	Amb. Temp (℃)	Liquid Temp (℃)	Input Power (W)	Tissue Frequency (MHz)	Dipole SN	Tissue Type	Measured SAR_{1g} (W/kg)	1 W Target SAR_{1g} (W/kg)	1 W Normalized SAR_{1g} (W/kg)	Deviation (%)
12/13/2010	23.5	22.2	0.1000	835	4d026	Head	0.921	9.460	9.21	-2.64%
12/20/2010	23.8	21.9	0.1000	835	4d026	Body	0.975	9.780	9.75	-0.31%
12/16/2010	23.2	21.6	0.0400	1765	1008	Head	1.45	38.200	36.25	-5.10%
12/22/2010	24.1	22.2	0.0400	1765	1008	Body	1.5	37.300	37.50	0.54%
12/13/2010	22.1	20.9	0.1000	1900	5d080	Head	3.93	40.100	39.30	-2.00%
12/21/2010	23.2	21.6	0.0400	1900	5d080	Body	1.56	40.500	39.00	-3.70%
12/23/2010	23.8	22.0	0.0250	2450	719	Body	1.36	51.400	54.40	5.84%
02/15/2011	24.0	22.2	0.0158	2450	719	Head	0.917	53.500	58.038	8.48%

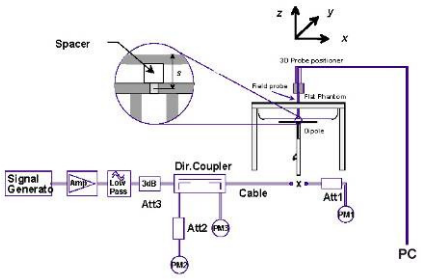

Figure 14-1
System Verification Setup Diagram

Figure 14-2
System Verification Setup Photo

© 2011 PCTEST Engineering Laboratory, Inc.

15 SAR DATA SUMMARY

Table 15-1
GSM 850 Head SAR Results

MEASUREMENT RESULTS							
FREQUENCY		Mode/Band	C_Power[dBm]		Side	Test Position	SAR (1g)
MHz	Ch.		Start	End			(W/kg)
836.60	190	GSM 850	33.15	33.10	Right	Touch	**0.389**
836.60	190	GSM 850	33.15	33.23	Right	Tilt	**0.210**
836.60	190	GSM 850	33.15	33.22	Left	Touch	**0.305**
836.60	190	GSM 850	33.15	33.15	Left	Tilt	**0.178**
ANSI / IEEE C95.1 1992 - SAFETY LIMIT Spatial Peak Uncontrolled Exposure/General					**Brain 1.6 W/kg (mW/g)** averaged over 1 gram		

Notes:

1. The test data reported are the worst-case SAR value with the position set in a typical configuration. Test procedures used were according to FCC/OET Bulletin 65, Supplement C [June 2001].
2. All modes of operation were investigated, and worst-case results are reported.
3. Batteries are fully charged for all readings. Standard battery was used.
4. Tissue parameters and temperatures are listed on the SAR plots.
5. Liquid tissue depth was at least 15.0 cm.
6. Justification for reduced test configurations: Per FCC/OET Bulletin 65 Supplement C (June 2001) and Public Notice DA-02-1438, if the SAR measured at the middle channel for each test configuration (left, right, cheek/touch, tilt/ear, extended and retracted) is at least 3.0 dB lower than the SAR limit, testing at the high and low channels is optional for such test configuration(s).

© 2011 PCTEST Engineering Laboratory, Inc.

Table 15-2
GSM 1900 Head SAR Results

MEASUREMENT RESULTS							
FREQUENCY		Mode/Band	C_Power[dBm]		Side	Test Position	SAR (1g)
MHz	Ch.		Start	End			(W/kg)
1880.00	661	GSM 1900	30.67	30.71	Right	Touch	**0.247**
1880.00	661	GSM 1900	30.67	30.68	Right	Tilt	**0.062**
1880.00	661	GSM 1900	30.67	30.69	Left	Touch	**0.142**
1880.00	661	GSM 1900	30.67	30.62	Left	Tilt	**0.080**
ANSI / IEEE C95.1 1992 - SAFETY LIMIT Spatial Peak Uncontrolled Exposure/General					**Brain 1.6 W/kg (mW/g)** averaged over 1 gram		

Notes:

1. The test data reported are the worst-case SAR value with the position set in a typical configuration. Test procedures used were according to FCC/OET Bulletin 65, Supplement C [June 2001].
2. All modes of operation were investigated, and worst-case results are reported.
3. Batteries are fully charged for all readings. Standard battery was used.
4. Tissue parameters and temperatures are listed on the SAR plots.
5. Liquid tissue depth was at least 15.0 cm.
6. Justification for reduced test configurations: Per FCC/OET Bulletin 65 Supplement C (June 2001) and Public Notice DA-02-1438, if the SAR measured at the middle channel for each test configuration (left, right, cheek/touch, tilt/ear, extended and retracted) is at least 3.0 dB lower than the SAR limit, testing at the high and low channels is optional for such test configuration(s).

© 2011 PCTEST Engineering Laboratory, Inc.

Table 15-3
UMTS IV Head SAR Results

MEASUREMENT RESULTS							
FREQUENCY		Mode/Band	C_Power[dBm]		Side	Test Position	SAR (1g)
MHz	Ch.		Start	End			(W/kg)
1730.40	1412	UMTS IV	23.91	23.96	Right	Touch	**0.512**
1730.40	1412	UMTS IV	23.91	23.95	Right	Tilt	**0.211**
1730.40	1412	UMTS IV	23.91	23.85	Left	Touch	**0.330**
1730.40	1412	UMTS IV	23.91	23.93	Left	Tilt	**0.197**
ANSI / IEEE C95.1 1992 - SAFETY LIMIT Spatial Peak Uncontrolled Exposure/General Population					**Brain 1.6 W/kg (mW/g)** averaged over 1 gram		

Notes:

1. The test data reported are the worst-case SAR value with the position set in a typical configuration. Test procedures used were according to FCC/OET Bulletin 65, Supplement C [June 2001].
2. All modes of operation were investigated, and worst-case results are reported.
3. Batteries are fully charged for all readings. Standard battery was used.
4. Tissue parameters and temperatures are listed on the SAR plots.
5. Liquid tissue depth was at least 15.0 cm.
6. Justification for reduced test configurations: Per FCC/OET Bulletin 65 Supplement C (June 2001) and Public Notice DA-02-1438, if the SAR measured at the middle channel for each test configuration (left, right, cheek/touch, tilt/ear, extended and retracted) is at least 3.0 dB lower than the SAR limit, testing at the high and low channels is optional for such test configuration(s).
7. WCDMA mode was tested under RMC 12.2 kbps with HSPA Inactive. WCDMA mode with HSPA active was not required per FCC KDB Publication 941225 since HSPA powers were not more than 0.25 dB higher than RMC powers and SAR was below 1.2 W/kg.
8. AWS WCDMA head SAR was measured with a EX3DV4 Probe (Serial Number: 3550) calibrated at 1750 Mhz and is valid for measuring SAR from 1650MHz – 1850MHz with software version Dasy 4.7. The 1750MHz specific head liquid was verified at 1765 MHz with specific probe calibration factors as required per FCC KDB Publication 450824.

© 2011 PCTEST Engineering Laboratory, Inc.

Table 15-4
2.4 GHz Head SAR Results

MEASUREMENT RESULTS									
FREQUENCY		Mode	Service	C_Power[dBm]		Side	Test Position	Data Rate (Mbps)	SAR (1g)
MHz	Ch.			Start	End				(W/kg)
2412	1	IEEE 802.11b	DSSS	16.90	16.91	Right	Touch	1	**0.535**
2437	6	IEEE 802.11b	DSSS	16.92	16.97	Right	Touch	1	**0.656**
2462	11	IEEE 802.11b	DSSS	17.17	17.14	Right	Touch	1	**0.826**
2462	11	IEEE 802.11b	DSSS	17.17	17.23	Right	Tilt	1	**0.394**
2462	11	IEEE 802.11b	DSSS	17.17	17.16	Left	Touch	1	**0.402**
2462	11	IEEE 802.11b	DSSS	17.17	17.18	Left	Tilt	1	**0.321**
ANSI / IEEE C95.1 1992 - SAFETY LIMIT Spatial Peak Uncontrolled Exposure/General Population						**Brain 1.6 W/kg (mW/g)** averaged over 1 gram			

Notes:

1. The test data reported are the worst-case SAR value with the position set in a typical configuration. Test procedures used were according to FCC/OET Bulletin 65, Supplement C [June 2001].
2. All modes of operation were investigated, and worst-case results are reported.
3. Batteries are fully charged for all readings. Standard battery was used.
4. Tissue parameters and temperatures are listed on the SAR plots.
5. Liquid tissue depth is was at least 15.0 cm.
6. Device was tested using a fixed spacing.
7. Justification for reduced test configurations for WIFI channels per KDB Publication 248227 and April 2010 FCC/TCB Meeting Notes: Highest average RF output power channel for the lowest data rate were selected for SAR evaluation. Other IEEE 802.11 modes (including 802.11n) were not investigated since the average output powers were not greater than 0.25 dB than that of the corresponding channel in the lowest data rate IEEE 802.11b mode.
8. WLAN transmission was verified using a spectrum analyzer.

© 2011 PCTEST Engineering Laboratory, Inc.

Table 15-5
Body SAR Results

MEASUREMENT RESULTS									
FREQUENCY		Mode	Service	C_Power[dBm]		Spacing	Slots	Side	SAR (1g)
MHz	Ch.			Start	End				(W/kg)
836.60	190	GSM 850	GPRS	30.61	30.64	2.0 cm	2	Back	**0.292**
836.60	190	GSM 850	GPRS	30.61	30.59	2.0 cm	2	Front	**0.194**
1880.00	661	GSM 1900	GPRS	28.60	28.54	2.0 cm	2	Back	**0.123**
1880.00	661	GSM 1900	GPRS	28.60	28.51	2.0 cm	2	Front	**0.095**
1730.40	1412	UMTS IV	RMC	23.91	23.98	2.0 cm	N/A	Back	**0.257**
1730.40	1412	UMTS IV	RMC	23.91	23.91	2.0 cm	N/A	Front	**0.250**
ANSI / IEEE C95.1 1992 - SAFETY LIMIT Spatial Peak Uncontrolled Exposure/General Population						**Body 1.6 W/kg (mW/g)** averaged over 1 gram			

Notes:

1. The test data reported are the worst-case SAR value with the position set in a typical configuration. Test procedures used were according to FCC/OET Bulletin 65, Supplement C [June 2001].
2. All modes of operation were investigated, and worst-case results are reported.
3. Tissue parameters and temperatures are listed on the SAR plots.
4. Batteries are fully charged for all readings. Standard battery was used.
5. Liquid tissue depth was at least 15.0 cm.
6. Device was tested using a fixed spacing.
7. WCDMA mode in Body SAR was tested under RMC 12.2 kbps with HSPA Inactive. WCDMA mode with HSPA active was not required per FCC KDB Publication 941225 since HSPA powers were not more than 0.25 dB higher than RMC powers and SAR was below 1.2 W/kg.
8. Justification for reduced test configurations per KDB Publication 941225: The source-based time-averaged output power was evaluated for all multi-slot operations. In addition to the worst-case reported, all source-based time-averaged powers within 10% of the worst-case were additionally included in the evaluation.
9. Justification for reduced test configurations: Per FCC/OET Bulletin 65 Supplement C (June 2001) and Public Notice DA-02-1438, if the SAR measured at the middle channel for each test configuration is at least 3.0 dB lower than the SAR limit, testing at the high and low channels is optional for such test configuration(s).
10. AWS WCDMA body SAR was measured with a ES3DV3 Probe (Serial Number: 3213) calibrated at 1750 MHz and is valid for measuring SAR from 1650MHz – 1850MHz with software version Dasy 4.7. The 1750MHz specific body liquid was verified at 1765 MHz with specific probe calibration factors as required per FCC KDB Publication 450824.

© 2011 PCTEST Engineering Laboratory, Inc.

Table 15-6
Hotspot Body SAR Results (Back-off Active)

MEASUREMENT RESULTS									
FREQUENCY		Mode	Service	C_Power[dBm]		Spacing	Slots	Side	SAR (1g)
MHz	Ch.			Start	End				(W/kg)
836.60	190	GSM 850	GPRS	28.81	28.77	1.0 cm	2	Back	**0.504**
836.60	190	GSM 850	GPRS	28.81	28.72	1.0 cm	2	Front	**0.221**
836.60	190	GSM 850	GPRS	28.81	28.80	1.0 cm	2	Right	**0.387**
836.60	190	GSM 850	GPRS	28.81	28.76	1.0 cm	2	Left	**0.331**
836.60	190	GSM 850	GPRS	28.81	28.90	1.0 cm	2	Bottom	**0.034**
1880.00	661	GSM 1900	GPRS	26.37	26.30	1.0 cm	2	Back	**0.334**
1880.00	661	GSM 1900	GPRS	26.37	26.29	1.0 cm	2	Front	**0.207**
1880.00	661	GSM 1900	GPRS	26.37	26.30	1.0 cm	2	Right	**0.047**
1880.00	661	GSM 1900	GPRS	26.37	26.37	1.0 cm	2	Left	**0.017**
1880.00	661	GSM 1900	GPRS	26.37	26.39	1.0 cm	2	Bottom	**0.246**
1730.40	1412	UMTS IV	RMC	21.97	21.98	1.0 cm	N/A	Back	**0.524**
1730.40	1412	UMTS IV	RMC	21.97	21.97	1.0 cm	N/A	Front	**0.482**
1730.40	1412	UMTS IV	RMC	21.97	22.01	1.0 cm	N/A	Right	**0.139**
1730.40	1412	UMTS IV	RMC	21.97	21.97	1.0 cm	N/A	Left	**0.124**
1730.40	1412	UMTS IV	RMC	21.97	22.03	1.0 cm	N/A	Bottom	**0.722**
ANSI / IEEE C95.1 1992 - SAFETY LIMIT Spatial Peak Uncontrolled Exposure/General Population						**Body 1.6 W/kg (mW/g)** averaged over 1 gram			

Notes:

1. The test data reported are the worst-case SAR value with the position set in a typical configuration. Test procedures used were according to FCC/OET Bulletin 65, Supplement C
2. All modes of operation were investigated, and worst-case results are reported.
3. Tissue parameters and temperatures are listed on the SAR plots.
4. Batteries are fully charged for all readings. Standard battery was used.
5. Liquid tissue depth was at least 15.0 cm.
6. Device was tested using a fixed spacing.
7. WCDMA mode in Body SAR was tested under RMC 12.2 kbps with HSPA Inactive. WCDMA mode with HSPA active was not required per FCC KDB Publication 941225 since HSPA powers were not more than 0.25 dB higher than RMC powers and SAR was below 1.2 W/kg.
8. Justification for reduced test configurations per KDB Publication 941225: The source-based time-averaged output power was evaluated for all multi-slot operations. In addition to the worst-case reported, all source-based time-averaged powers within 10% of the worst-case were additionally included in the evaluation.
9. Justification for reduced test configurations: Per FCC/OET Bulletin 65 Supplement C (June 2001) and Public Notice DA-02-1438, if the SAR measured at the middle channel for each test configuration is at least 3.0 dB lower than the SAR limit, testing at the high and low channels is optional for such test configuration(s).
10. Output powers were tuned by the manufacturer according to Hotspot power profile per KDB Inquiry 457096. Reduced powers for hotspot were used to meet internal SAR limits set by the manufacturer.
11. AWS WCDMA body SAR was measured with a ES3DV3 Probe (Serial Number: 3213) calibrated at 1750 MHz and is valid for measuring SAR from 1650MHz – 1850MHz with software version Dasy 4.7. The 1750MHz specific body liquid was verified at 1765 MHz with specific probe calibration factors as required per FCC KDB Publication 450824.

© 2011 PCTEST Engineering Laboratory, Inc.

Table 15-7
2.4 GHz Body SAR Results

MEASUREMENT RESULTS									
FREQUENCY		Mode	Service	C_Power[dBm]		Spacing	Data Rate (Mbps)	Side	SAR
MHz	Ch.			Start	End				(W/kg)
2462	11	IEEE 802.11b	DSSS	17.17	17.18	1.0 cm	1	Back	0.135
2462	11	IEEE 802.11b	DSSS	17.17	17.25	1.0 cm	1	Front	0.151
2462	11	IEEE 802.11b	DSSS	17.17	17.25	1.0 cm	1	Left	0.178
2462	11	IEEE 802.11b	DSSS	17.17	17.25	1.0 cm	1	Top	0.190
ANSI / IEEE C95.1 1992 - SAFETY LIMIT Spatial Peak Uncontrolled Exposure/General Population						**Body 1.6 W/kg (mW/g)** averaged over 1 gram			

Notes:

1. The test data reported are the worst-case SAR value with the position set in a typical configuration. Test procedures used were according to FCC/OET Bulletin 65, Supplement C [June 2001].
2. All modes of operation were investigated, and worst-case results are reported.
3. Batteries are fully charged for all readings. Standard battery was used.
4. Tissue parameters and temperatures are listed on the SAR plots.
5. Liquid tissue depth is was at least 15.0 cm.
6. Device was tested using a fixed spacing.
7. Justification for reduced test configurations for WIFI channels per KDB Publication 248227 and April 2010 FCC/TCB Meeting Notes: Highest average RF output power channel for the lowest data rate were selected for SAR evaluation. Other IEEE 802.11 modes (including 802.11n) were not investigated since the average output powers were not greater than 0.25 dB than that of the corresponding channel in the lowest data rate IEEE 802.11b mode.
8. Per Oct 2010 TCB FCC Workshop, the edges with antennas within 2.5 cm are required to be evaluated for SAR. See Figure 13-1 for distances of the actual device.
9. WLAN transmission was verified using a spectrum analyzer.

© 2011 PCTEST Engineering Laboratory, Inc.

16 FCC MULTI-TX AND ANTENNA SAR CONSIDERATIONS

16.1 Introduction

The following procedures adopted from "FCC SAR Considerations for Cell Phones with Multiple Transmitters" FCC KDB Publication 648474 are applicable to handsets with built-in unlicensed transmitters such as 802.11a/b/g and Bluetooth devices which may simultaneously transmit with the licensed transmitter.

16.2 FCC Power Tables & Conditions

	2.45	5.15 - 5.35	5.47 - 5.85	GHz
P_{Ref}	12	6	5	mW
Device output power should be rounded to the nearest mW to compare with values specified in this table.				

Figure 16-1
Output Power Thresholds for Unlicensed Transmitters

	Individual Transmitter	Simultaneous Transmission
Licensed Transmitters	Routine evaluation required	SAR not required: Unlicensed only ○ when stand-alone 1-g SAR is not required and antenna is ≥ 5 cm from other antennas Licensed & Unlicensed ○ when the sum of the 1-g SAR is < 1.6 W/kg for all simultaneous transmitting antennas ○ when SAR to peak location separation ratio of simultaneous transmitting antenna pair is < 0.3 SAR required: Licensed & Unlicensed antenna pairs with SAR to peak location separation ratio ≥ 0.3; test is only required for the configuration that results in the highest SAR in stand-alone configuration for each wireless mode and exposure condition Note: simultaneous transmission exposure conditions for head and body can be different for different style phones; therefore, different test requirements may apply
Unlicensed Transmitters	When there is no simultaneous transmission – ○ output ≤ 60/f: SAR not required ○ output > 60/f: stand-alone SAR required When there is simultaneous transmission – Stand-alone SAR not required when ○ output ≤ 2·P_{Ref} and antenna is ≥ 5.0 cm from other antennas ○ output ≤ P_{Ref} and antenna is ≥ 2.5 cm from other antennas ○ output ≤ P_{Ref} and antenna is < 2.5 cm from other antennas, each with either output power ≤ P_{Ref} or 1-g SAR < 1.2 W/kg Otherwise stand-alone SAR is required When stand-alone SAR is required ○ test SAR on highest output channel for each wireless mode and exposure condition ○ if SAR for highest output channel is > 50% of SAR limit, evaluate all channels according to normal procedures	

Figure 16-2
SAR Evaluation Requirements for Multiple Transmitter Handsets

16.3 Multiple Antenna/Transmission Information for P999DW, LG-P999DW, P999, LG-P999

The separation between the main antenna and the Bluetooth and WLAN antennas is 95.5 mm.
RF Conducted Power of Bluetooth Tx is 11.508 mW. RF Conducted Power of WLAN is 52.119 mW.

© 2011 PCTEST Engineering Laboratory, Inc.

16.4 Simultaneous Transmission Analysis

This device supports hotspot capability. Hotspot body SAR is required for GPRS+WLAN and WCDMA+WLAN transmission combinations.

Additionally, WCDMA/HSPA hotspot may be active during voice WCDMA mode because, in WCDMA, both voice and data use the same physical channel. When doing multiple services (multi-Radio Access Bearer or multi-RAB), the power control will be based on a physical control channel (Dedicated Physical Control Channel [DPCCH]) and power control will be adjusted to meet the needs of both services, limited in power, if hotspot is turned on by the end user.

It is unnecessary to evaluate WCDMA head SAR at reduced power since head SAR was evaluated for WCDMA at full power which represents the most conservative test configuration.

See Table **Table 16-1** for supported simultaneous transmission combinations.

Table 16-1 Supported Transmission Combinations

Capable Tx Configurations	Transmission Scenarios Supported	Hotspot SAR
GSM	√	
GPRS	√	
WCDMA Voice	√	
WCDMA/HSPA data	√	
WIFI	√	
GPRS+WLAN	√	√
WCDMA+WLAN	√	√
WCDMA Voice+WCDMA/HSPA Data	√ (shared)	

16.5 Conclusion

Based on the output power, antenna separation distance and the Body SAR of the dominant transmitter, a stand-alone Bluetooth SAR test is not required while for WLAN it is required.

Table 16-2
2G/3G + WIFI Simultaneous Tx (Held to Ear)

Simult Tx	Configuration	850 GSM SAR (W/kg)	WIFI SAR (W/kg)	ΣSAR (W/kg)
Head SAR	Right Cheek	0.389	0.826	**1.215**
	Right Tilt	0.210	0.394	**0.604**
	Left Cheek	0.305	0.402	**0.707**
	Left Tilt	0.178	0.321	**0.499**

Simult Tx	Configuration	1900 GSM SAR (W/kg)	WIFI SAR (W/kg)	ΣSAR (W/kg)
Head SAR	Right Cheek	0.247	0.826	**1.073**
	Right Tilt	0.062	0.394	**0.456**
	Left Cheek	0.142	0.402	**0.544**
	Left Tilt	0.080	0.321	**0.401**

Simult Tx	Configuration	AWS WCDMA SAR (W/kg)	WIFI SAR (W/kg)	ΣSAR (W/kg)
Head SAR	Right Cheek	0.512	0.826	**1.338**
	Right Tilt	0.211	0.394	**0.605**
	Left Cheek	0.330	0.402	**0.732**
	Left Tilt	0.197	0.321	**0.518**

© 2011 PCTEST Engineering Laboratory, Inc.

Table 16-3
2G/3G + WIFI Simultaneous Transmission (Hotspot Inactive)

Simult Tx	Configuration	850 GPRS SAR (W/kg)	WIFI SAR (W/kg)	ΣSAR (W/kg)
Body SAR	Back	0.292	0.135	**0.427**

Simult Tx	Configuration	1900 GPRS SAR (W/kg)	WIFI SAR (W/kg)	ΣSAR (W/kg)
Body SAR	Back	0.123	0.135	**0.258**

Simult Tx	Configuration	AWS WCDMA SAR (W/kg)	WIFI SAR (W/kg)	ΣSAR (W/kg)
Body SAR	Back	0.257	0.135	**0.392**

Note: WLAN Data was measured at 1.0 cm representing worst-case scenario.

Table 16-4
2G/3G + WIFI Simultaneous Transmission (Hotspot Active)

Simult Tx	Configuration	850 GPRS SAR (W/kg)	WIFI SAR (W/kg)	ΣSAR (W/kg)
Body SAR	Back	0.504	0.135	**0.639**
	Front	0.221	0.151	**0.372**
	Right	0.387	-	**0.387**
	Left	0.331	0.178	**0.509**
	Top	-	0.190	**0.190**
	Bottom	0.034	-	**0.034**

Simult Tx	Configuration	1900 GPRS SAR (W/kg)	WIFI SAR (W/kg)	ΣSAR (W/kg)
Body SAR	Back	0.334	0.135	**0.469**
	Front	0.207	0.151	**0.358**
	Right	0.047	-	**0.047**
	Left	0.017	0.178	**0.195**
	Top	-	0.190	**0.190**
	Bottom	0.246	-	**0.246**

Simult Tx	Configuration	AWS WCDMA SAR (W/kg)	WIFI SAR (W/kg)	ΣSAR (W/kg)
Body SAR	Back	0.524	0.135	**0.659**
	Front	0.482	0.151	**0.633**
	Right	0.139	-	**0.139**
	Left	0.124	0.178	**0.302**
	Top	-	0.190	**0.190**
	Bottom	0.722	-	**0.722**

Note: "-" SAR results shown in the table are zero for summation purposes. SAR was not required to be measured due to exclusions mentioned in Section 15.4.

The above numerical summed SAR was below the SAR limit. Therefore, the above analysis is sufficient to determine that simultaneous transmission cases will not exceed the SAR limit. Therefore, no volumetric SAR summation is required since the numerical sums are below the limit.

© 2011 PCTEST Engineering Laboratory, Inc.

17 EQUIPMENT LIST

Manufacturer	Model	Description	Cal Date	Cal Interval	Cal Due	Serial Number
Agilent	85070B	Dielectric Probe Kit	8/22/2010	Annual	8/22/2011	US33020316
Agilent	8648D	(9kHz-4GHz) Signal Generator	10/11/2010	Annual	10/11/2011	3613A00315
Agilent	8753E	(30kHz-6GHz) Network Analyzer	3/31/2010	Annual	3/31/2011	JP38020182
Agilent	E5515C	Wireless Communications Test Set	10/11/2010	Annual	10/11/2011	GB46110872
Agilent	E5515C	Wireless Communications Test Set	10/11/2010	Annual	10/11/2011	GB46310798
Agilent	E5515C	Wireless Communications Test Set	8/12/2010	Annual	8/12/2011	GB41450275
Agilent	E8257D	(250kHz-20GHz) Signal Generator	3/30/2010	Annual	3/30/2011	MY45470194
Gigatronics	80701A	(0.05-18GHz) Power Sensor	10/11/2010	Annual	10/11/2011	1833460
Gigatronics	8651A	Universal Power Meter	10/11/2010	Annual	10/11/2011	8650319
Index SAR	IXTL-010	Dielectric Measurement Kit	N/A		N/A	N/A
Index SAR	IXTL-030	30MM TEM line for 6 GHz	N/A		N/A	N/A
Rohde & Schwarz	CMU200	Base Station Simulator	11/11/2010	Annual	11/11/2011	836371/0079
Rohde & Schwarz	CMU200	Base Station Simulator	6/21/2010	Annual	6/21/2011	833855/0010
SPEAG	D1450V2	1450 MHz SAR Dipole	5/20/2009	Biennial	5/20/2011	1025
SPEAG	D1765V2	1765 MHz SAR Dipole	5/19/2009	Biennial	5/19/2011	1008
SPEAG	D1900V2	1900 MHz SAR Dipole	8/18/2009	Biennial	8/18/2011	5d080
SPEAG	D2450V2	2450 MHz SAR Dipole	8/27/2009	Biennial	8/27/2011	719
SPEAG	D2600V2	2600 MHz SAR Dipole	8/12/2009	Biennial	8/12/2011	1004
SPEAG	D5GHzV2	5 GHz SAR Dipole	8/19/2009	Biennial	8/19/2011	1007
SPEAG	D835V2	835 MHz SAR Dipole	8/24/2009	Biennial	8/24/2011	4d026
SPEAG	DAE3	Dasy Data Acquisition Electronics	11/18/2010	Annual	11/18/2011	455
SPEAG	DAE4	Dasy Data Acquisition Electronics	3/22/2010	Annual	3/22/2011	704
SPEAG	DAE4	Dasy Data Acquisition Electronics	4/21/2010	Annual	4/21/2011	665
SPEAG	DAE4	Dasy Data Acquisition Electronics	1/22/2010	Annual	1/22/2011	649
SPEAG	ES3DV2	SAR Probe	9/21/2010	Annual	9/21/2011	3022
SPEAG	EX3DV4	SAR Probe	8/19/2010	Annual	8/19/2011	3561
SPEAG	EX3DV4	SAR Probe	1/26/2010	Annual	1/26/2011	3550
SPEAG	DAE4	Dasy Data Acquisition Electronics	7/8/2010	Annual	7/8/2011	859
SPEAG	D750V3	750 MHz Dipole	8/19/2010	Biennial	8/19/2012	1003
SPEAG	ES3DV3	SAR Probe	3/16/2010	Annual	3/16/2011	3213
SPEAG	ES3DV3	SAR Probe	4/20/2010	Annual	4/20/2011	3209
Rohde & Schwarz	SMIQ03B	Signal Generator	4/1/2010	Annual	4/1/2011	DE27259
SPEAG	D1640V2	1640 MHz Dipole	8/17/2010	Biennial	8/17/2012	321
Rohde & Schwarz	CMW500	LTE Radio Communication Tester	8/30/2010	Annual	8/30/2011	100976
Agilent	8648D	Signal Generator	4/1/2010	Annual	4/1/2011	3629U00687
Aprel	ALS-PR-DIEL	Dielectric Probe Kit	N/A		N/A	260-00959
Agilent	E5515C	Wireless Communications Tester	4/14/2010	Annual	4/14/2011	US41140256
Amplifier Research	5S1G4	5W, 800MHz-4.2GHz	N/A			17042

Note: EX3DV3 Probe (SN: 3550) and DAE4 (SN: 649) were only used for tests performed on 12/13/10-12/23/10.

Justification for 2-year calibration cycle for SAR dipoles is found in Section 14.3.

© 2011 PCTEST Engineering Laboratory, Inc.

18 MEASUREMENT UNCERTAINTIES

Applicable for 800 – 3000 MHz.

a	b	c	d	e= f(d,k)	f	g	h = c x f/e	i = c x g/e	k
Uncertainty Component	**IEEE 1528 Sec.**	**Tol. (± %)**	**Prob. Dist.**	**Div.**	**c_i 1gm**	**c_i 10 gms**	**1gm u_i (± %)**	**10gms u_i (± %)**	**v_i**
Measurement System									
Probe Calibration	E.2.1	5.5	N	1	1.0	1.0	5.5	5.5	∞
Axial Isotropy	E.2.2	0.25	N	1	0.7	0.7	0.2	0.2	∞
Hemishperical Isotropy	E.2.2	1.3	N	1	1.0	1.0	1.3	1.3	∞
Boundary Effect	E.2.3	0.4	N	1	1.0	1.0	0.4	0.4	∞
Linearity	E.2.4	0.3	N	1	1.0	1.0	0.3	0.3	∞
System Detection Limits	E.2.5	5.1	N	1	1.0	1.0	5.1	5.1	∞
Readout Electronics	E.2.6	1.0	N	1	1.0	1.0	1.0	1.0	∞
Response Time	E.2.7	0.8	R	1.73	1.0	1.0	0.5	0.5	∞
Integration Time	E.2.8	2.6	R	1.73	1.0	1.0	1.5	1.5	∞
RF Ambient Conditions	E.6.1	3.0	R	1.73	1.0	1.0	1.7	1.7	∞
Probe Positioner Mechanical Tolerance	E.6.2	0.4	R	1.73	1.0	1.0	0.2	0.2	∞
Probe Positioning w/ respect to Phantom	E.6.3	2.9	R	1.73	1.0	1.0	1.7	1.7	∞
Extrapolation, Interpolation & Integration algorithms for Max. SAR Evaluation	E.5	1.0	R	1.73	1.0	1.0	0.6	0.6	∞
Test Sample Related									
Test Sample Positioning	E.4.2	6.0	N	1	1.0	1.0	6.0	6.0	287
Device Holder Uncertainty	E.4.1	3.32	R	1.73	1.0	1.0	1.9	1.9	∞
Output Power Variation - SAR drift measurement	6.6.2	5.0	R	1.73	1.0	1.0	2.9	2.9	∞
Phantom & Tissue Parameters									
Phantom Uncertainty (Shape & Thickness tolerances)	E.3.1	4.0	R	1.73	1.0	1.0	2.3	2.3	∞
Liquid Conductivity - deviation from target values	E.3.2	5.0	R	1.73	0.64	0.43	1.8	1.2	∞
Liquid Conductivity - measurement uncertainty	E.3.3	3.8	N	1	0.64	0.43	2.4	1.6	6
Liquid Permittivity - deviation from target values	E.3.2	5.0	R	1.73	0.60	0.49	1.7	1.4	∞
Liquid Permittivity - measurement uncertainty	E.3.3	4.5	N	1	0.60	0.49	2.7	2.2	6
Combined Standard Uncertainty (k=1)			RSS				11.8	11.5	299
Expanded Uncertainty (95% CONFIDENCE LEVEL)			k=2				23.7	23.0	

The above measurement uncertainties are according to IEEE Std. 1528-2003

© 2011 PCTEST Engineering Laboratory, Inc.

19 CONCLUSION

19.1 Measurement Conclusion

The SAR evaluation indicates that the EUT complies with the RF radiation exposure limits of the FCC and Industry Canada, with respect to all parameters subject to this test. These measurements were taken to simulate the RF effects of RF exposure under worst-case conditions. Precise laboratory measures were taken to assure repeatability of the tests. The results and statements relate only to the item(s) tested.

Please note that the absorption and distribution of electromagnetic energy in the body are very complex phenomena that depend on the mass, shape, and size of the body, the orientation of the body with respect to the field vectors, and the electrical properties of both the body and the environment. Other variables that may play a substantial role in possible biological effects are those that characterize the environment (e.g. ambient temperature, air velocity, relative humidity, and body insulation) and those that characterize the individual (e.g. age, gender, activity level, debilitation, or disease). Because various factors may interact with one another to vary the specific biological outcome of an exposure to electromagnetic fields, any protection guide should consider maximal amplification of biological effects as a result of field-body interactions, environmental conditions, and physiological variables. [3]

© 2011 PCTEST Engineering Laboratory, Inc.

20 REFERENCES

[1] Federal Communications Commission, ET Docket 93-62, Guidelines for Evaluating the Environmental Effects of Radiofrequency Radiation, Aug. 1996.

[2] ANSI/IEEE C95.1-2005, American National Standard safety levels with respect to human exposure to radio frequency electromagnetic fields, 300kHz to 100GHz, New York: IEEE, 2006.

[3] ANSI/IEEE C95.1-1992, American National Standard safety levels with respect to human exposure to radio frequency electromagnetic fields, 300kHz to 100GHz, New York: IEEE, Sept. 1992.

[4] ANSI/IEEE C95.3-2002, IEEE Recommended Practice for the Measurement of Potentially Hazardous Electromagnetic Fields - RF and Microwave, New York: IEEE, December 2002.

[5] Federal Communications Commission, OET Bulletin 65 (Edition 97-01), Supplement C (Edition 01-01), Evaluating Compliance with FCC Guidelines for Human Exposure to Radiofrequency Electromagnetic Fields, June 2001.

[6] IEEE Standards Coordinating Committee 34 – IEEE Std. 1528-2003, Recommended Practice for Determining the Peak Spatial-Average Specific Absorption Rate (SAR) in the Human Body Due to Wireless Communications Devices.

[7] NCRP, National Council on Radiation Protection and Measurements, Biological Effects and Exposure Criteria for RadioFrequency Electromagnetic Fields, NCRP Report No. 86, 1986. Reprinted Feb. 1995.

[8] T. Schmid, O. Egger, N. Kuster, Automated E-field scanning system for dosimetric assessments, IEEE Transaction on Microwave Theory and Techniques, vol. 44, Jan. 1996, pp. 105-113.

[9] K. Pokovic, T. Schmid, N. Kuster, Robust setup for precise calibration of E-field probes in tissue simulating liquids at mobile communications frequencies, ICECOM97, Oct. 1997, pp. 120-124.

[10] K. Pokovic, T. Schmid, and N. Kuster, E-field Probe with improved isotropy in brain simulating liquids, Proceedings of the ELMAR, Zadar, Croatia, June 23-25, 1996, pp. 172-175.

[11] Schmid & Partner Engineering AG, Application Note: Data Storage and Evaluation, June 1998, p2.

[12] V. Hombach, K. Meier, M. Burkhardt, E. Kuhn, N. Kuster, The Dependence of EM Energy Absorption upon Human Head Modeling at 900 MHz, IEEE Transaction on Microwave Theory and Techniques, vol. 44 no. 10, Oct. 1996, pp. 1865-1873.

[13] N. Kuster and Q. Balzano, Energy absorption mechanism by biological bodies in the near field of dipole antennas above 300MHz, IEEE Transaction on Vehicular Technology, vol. 41, no. 1, Feb. 1992, pp. 17-23.

[14] G. Hartsgrove, A. Kraszewski, A. Surowiec, Simulated Biological Materials for Electromagnetic Radiation Absorption Studies, University of Ottawa, Bioelectromagnetics, Canada: 1987, pp. 29-36.

[15] Q. Balzano, O. Garay, T. Manning Jr., Electromagnetic Energy Exposure of Simulated Users of Portable Cellular Telephones, IEEE Transactions on Vehicular Technology, vol. 44, no.3, Aug. 1995.

© 2011 PCTEST Engineering Laboratory, Inc.

[16] W. Gander, Computermathematick, Birkhaeuser, Basel, 1992.

[17] W.H. Press, S.A. Teukolsky, W.T. Vetterling, and B.P. Flannery, Numerical Recepies in C, The Art of Scientific Computing, Second edition, Cambridge University Press, 1992.

[18] Federal Communications Commission, OET Bulletin 65, Evaluating Compliance with FCC Guidelines for Human Exposure to Radiofrequency Electromagnetic Fields. Supplement C, Dec. 1997.

[19] N. Kuster, R. Kastle, T. Schmid, Dosimetric evaluation of mobile communications equipment with known precision, IEEE Transaction on Communications, vol. E80-B, no. 5, May 1997, pp. 645-652.

[20] CENELEC CLC/SC111B, European Prestandard (prENV 50166-2), Human Exposure to Electromagnetic Fields High-frequency: 10kHz-300GHz, Jan. 1995.

[21] Prof. Dr. Niels Kuster, ETH, Eidgenössische Technische Hoschschule Zürich, Dosimetric Evaluation of the Cellular Phone.

[22] IEC 62209-1, Human exposure to radio frequency fields from hand-held and body-mounted wireless communication devices - Human models, instrumentation, and procedures - Part 1: Procedure to determine the specific absorption rate (SAR) for hand-held devices used in close proximity to the ear (frequency range of 300 MHz to 3 GHz), Feb. 2005.

[23] Industry Canada RSS-102 Radio Frequency Exposure Compliance of Radiocommunication Apparatus (All Frequency Bands) Issue 4, March 2010.

[24] Health Canada Safety Code 6 Limits of Human Exposure to Radio Frequency Electromagnetic Fields in the Frequency Range from 3 kHz – 300 GHz, 2009

[25] FCC Public Notice DA-02-1438. Office of Engineering and Technology Announces a Transition Period for the Phantom Requirements of Supplement C to OET Bulletin 65, June 19, 2002

[26] FCC SAR Measurement Procedures for 3G Devices KDB Publication 941225

[27] SAR Measurement procedures for IEEE 802.11a/b/g KDB Publication 248227

[28] FCC SAR Considerations for Handsets with Multiple Transmitters and Antennas, KDB Publication 648474

[29] FCC Application Note for SAR Probe Calibration and System Verification Consideration for Measurements at 150 MHz – 3 GHz, KDB Publication 450824

[30] FCC SAR Evaluation Considerations for Laptop Computers with Antennas Built-in on Display Screens, KDB Publication 616217

[31] FCC SAR Measurement Requirements for 3 – 6 GHz, KDB Publication 865664

[32] FCC Mobile Portable RF Exposure Procedure, KDB Publication 447498

[33] FCC SAR Procedures for Dongle Transmitters, KDB Publication 447498

[34] Anexo à Resolução No. 533, de 10 de Septembro de 2009.

[35] FCC SAR Test Considerations for LTE Handsets and Data Modems, KDB Publication 941225

© 2011 PCTEST Engineering Laboratory, Inc.

APPENDIX A: SAR TEST DATA

PCTEST ENGINEERING LABORATORY, INC.

DUT: BEJP999DW; Type: 850/1900 GSM/GPRS/EDGE and AWS WCDMA/HSPA Phone with Bluetooth and WLAN; Serial: SAR

Communication System: GSM850; Frequency: 836.6 MHz;Duty Cycle: 1:8.3
Medium: 835 Brain Medium parameters used (interpolated):
f = 836.6 MHz; σ = 0.88 mho/m; ε_r = 39.8; ρ = 1000 kg/m^3
Phantom section: Right Section

Test Date: 12-13-2010; Ambient Temp: 23.5°C; Tissue Temp: 22.2°C

Probe: EX3DV4 - SN3550; ConvF(8.28, 8.28, 8.28); Calibrated: 1/26/2010
Sensor-Surface: 4mm (Mechanical Surface Detection)
Electronics: DAE4 Sn649; Calibrated: 1/22/2010
Phantom: SAM Main; Type: SAM 4.0; Serial: TP-1114
Measurement SW: DASY4, V4.7 Build 80; Postprocessing SW: SEMCAD, V1.8 Build 186

Mode: GSM 850, Right Head, Touch, Mid.ch

Area Scan (7x12x1): Measurement grid: dx=15mm, dy=15mm
Zoom Scan (5x5x7)/Cube 0: Measurement grid: dx=8mm, dy=8mm, dz=5mm
Reference Value = 21.2 V/m
Peak SAR (extrapolated) = 0.496 W/kg
SAR(1 g) = 0.389 mW/g; SAR(10 g) = 0.291 mW/g

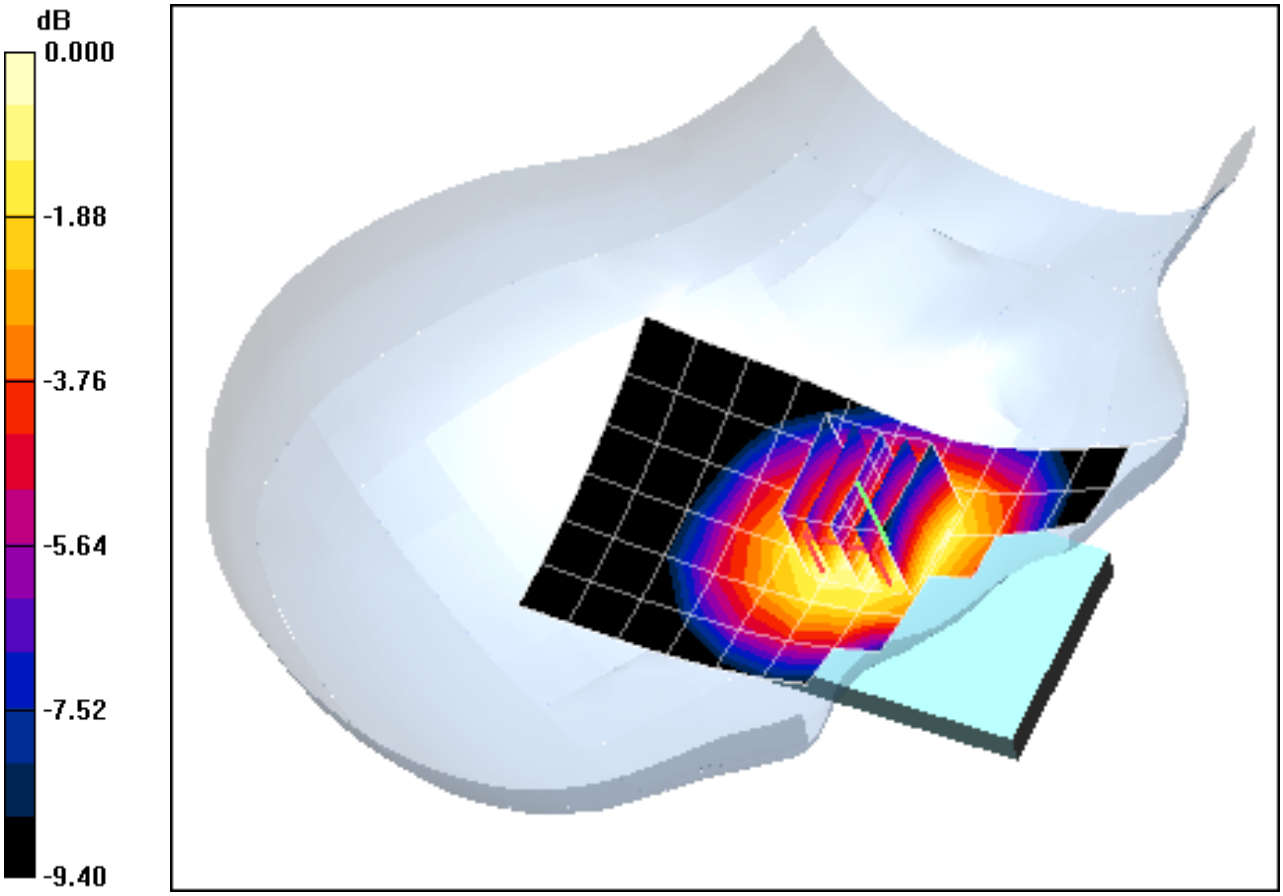

0 dB = 0.412mW/g

PCTEST ENGINEERING LABORATORY, INC.

DUT: BEJP999DW; Type: 850/1900 GSM/GPRS/EDGE and AWS WCDMA/HSPA Phone with Bluetooth and WLAN; Serial: SAR

Communication System: GSM850; Frequency: 836.6 MHz;Duty Cycle: 1:8.3
Medium: 835 Brain Medium parameters used (interpolated):
f = 836.6 MHz; σ = 0.88 mho/m; ε_r = 39.8; ρ = 1000 kg/m^3
Phantom section: Right Section

Test Date: 12-13-2010; Ambient Temp: 23.5°C; Tissue Temp: 22.2°C

Probe: EX3DV4 - SN3550; ConvF(8.28, 8.28, 8.28); Calibrated: 1/26/2010
Sensor-Surface: 4mm (Mechanical Surface Detection)
Electronics: DAE4 Sn649; Calibrated: 1/22/2010
Phantom: SAM Main; Type: SAM 4.0; Serial: TP-1114
Measurement SW: DASY4, V4.7 Build 80; Postprocessing SW: SEMCAD, V1.8 Build 186

Mode: GSM 850, Right Head, Touch, Mid.ch

Area Scan (7x12x1): Measurement grid: dx=15mm, dy=15mm
Zoom Scan (5x5x7)/Cube 0: Measurement grid: dx=8mm, dy=8mm, dz=5mm
Reference Value = 21.2 V/m
Peak SAR (extrapolated) = 0.496 W/kg
SAR(1 g) = 0.389 mW/g; SAR(10 g) = 0.291 mW/g

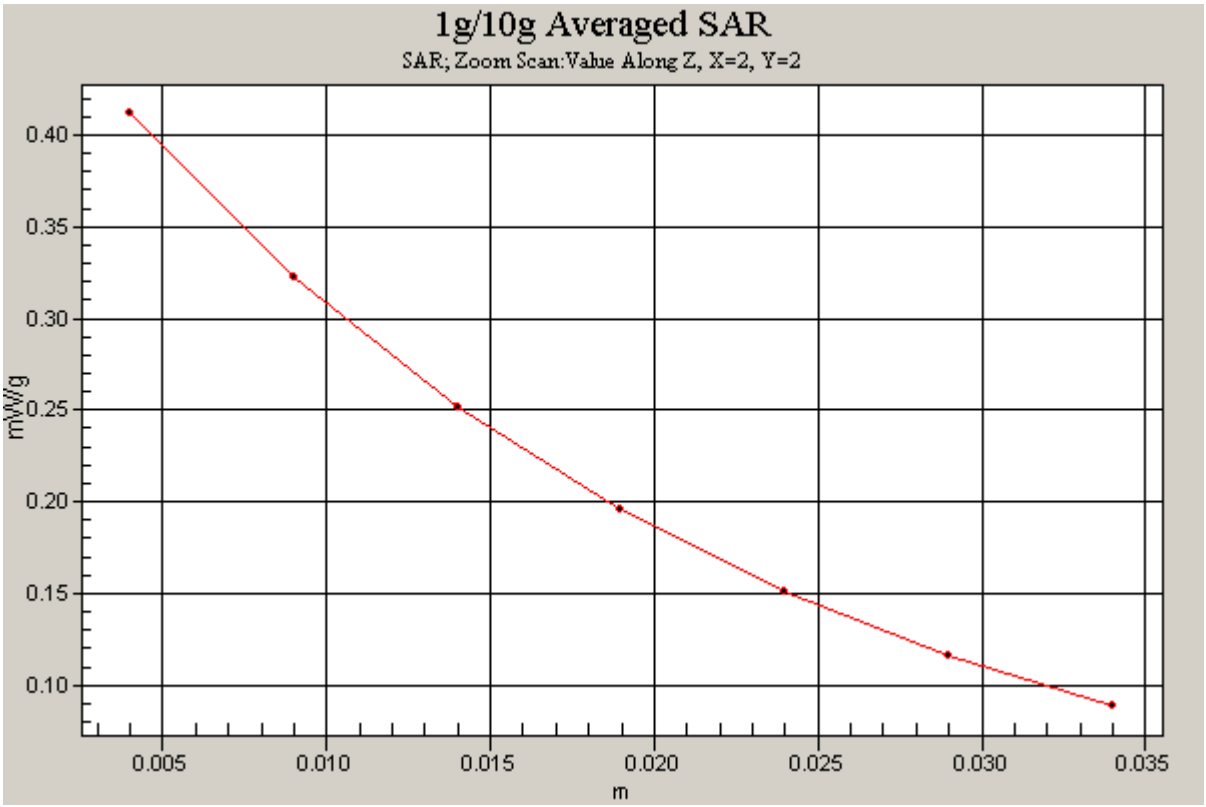

PCTEST ENGINEERING LABORATORY, INC.

DUT: BEJP999DW; Type: 850/1900 GSM/GPRS/EDGE and AWS WCDMA/HSPA Phone with Bluetooth and WLAN; Serial: SAR

Communication System: GSM850; Frequency: 836.6 MHz;Duty Cycle: 1:8.3
Medium: 835 Brain Medium parameters used (interpolated):
f = 836.6 MHz; σ = 0.88 mho/m; ε_r = 39.8; ρ = 1000 kg/m^3
Phantom section: Right Section

Test Date: 12-13-2010; Ambient Temp: 23.5°C; Tissue Temp: 22.2°C

Probe: EX3DV4 - SN3550; ConvF(8.28, 8.28, 8.28); Calibrated: 1/26/2010
Sensor-Surface: 4mm (Mechanical Surface Detection)
Electronics: DAE4 Sn649; Calibrated: 1/22/2010
Phantom: SAM Main; Type: SAM 4.0; Serial: TP-1114
Measurement SW: DASY4, V4.7 Build 80; Postprocessing SW: SEMCAD, V1.8 Build 186

Mode: GSM 850, Right Head, Tilt, Mid.ch

Area Scan (7x12x1): Measurement grid: dx=15mm, dy=15mm
Zoom Scan (5x5x7)/Cube 0: Measurement grid: dx=8mm, dy=8mm, dz=5mm
Reference Value = 15.8 V/m
Peak SAR (extrapolated) = 0.263 W/kg
SAR(1 g) = 0.210 mW/g; SAR(10 g) = 0.159 mW/g

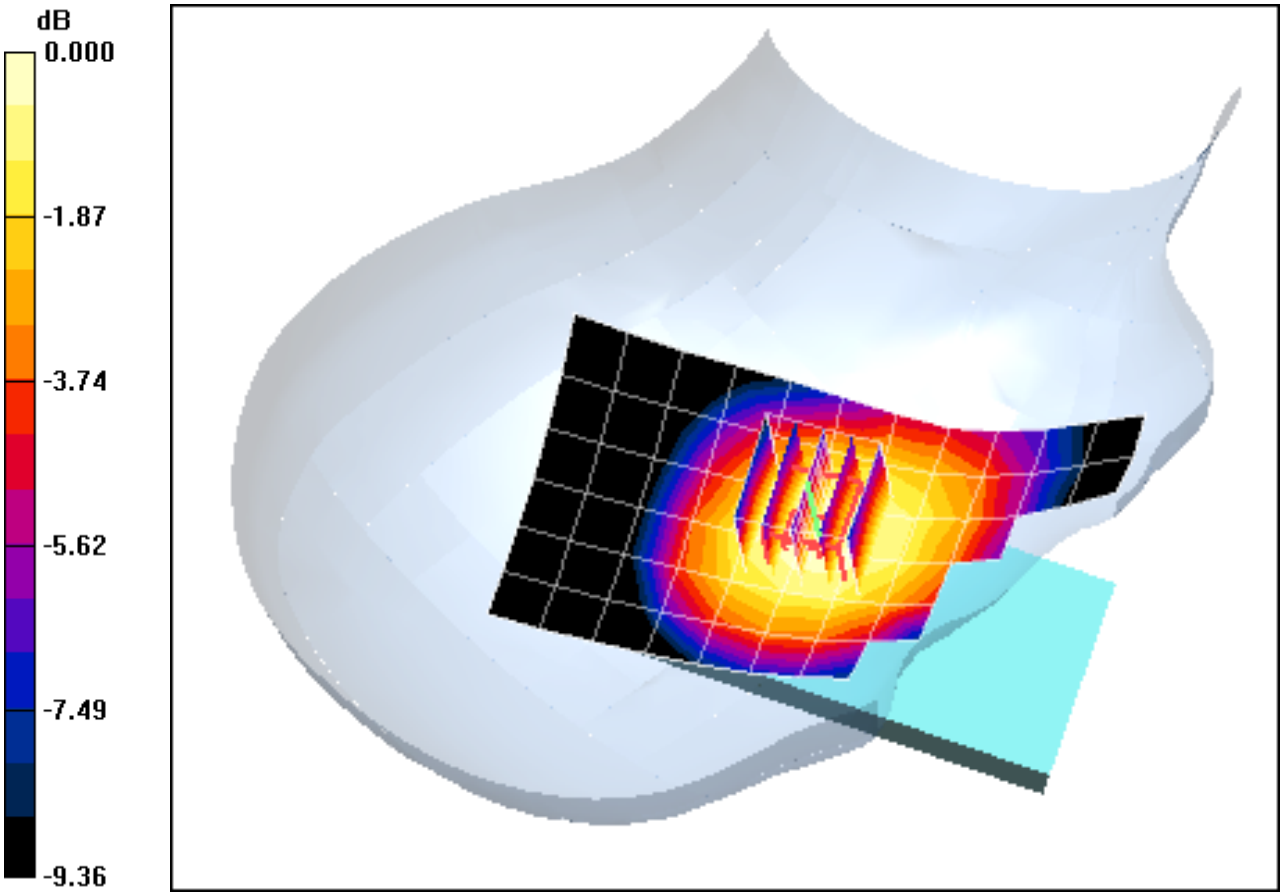

0 dB = 0.220mW/g

PCTEST ENGINEERING LABORATORY, INC.

DUT: BEJP999DW; Type: 850/1900 GSM/GPRS/EDGE and AWS WCDMA/HSPA Phone with Bluetooth and WLAN; Serial: SAR

Communication System: GSM850; Frequency: 836.6 MHz;Duty Cycle: 1:8.3
Medium: 835 Brain Medium parameters used (interpolated):
f = 836.6 MHz; σ = 0.88 mho/m; ε_r = 39.8; ρ = 1000 kg/m^3
Phantom section: Left Section

Test Date: 12-13-2010; Ambient Temp: 23.5°C; Tissue Temp: 22.2°C

Probe: EX3DV4 - SN3550; ConvF(8.28, 8.28, 8.28); Calibrated: 1/26/2010
Sensor-Surface: 4mm (Mechanical Surface Detection)
Electronics: DAE4 Sn649; Calibrated: 1/22/2010
Phantom: SAM Main; Type: SAM 4.0; Serial: TP-1114
Measurement SW: DASY4, V4.7 Build 80; Postprocessing SW: SEMCAD, V1.8 Build 186

Mode: GSM 850, Left Head, Touch, Mid.ch

Area Scan (7x12x1): Measurement grid: dx=15mm, dy=15mm
Zoom Scan (5x5x7)/Cube 0: Measurement grid: dx=8mm, dy=8mm, dz=5mm
Reference Value = 19.4 V/m
Peak SAR (extrapolated) = 0.387 W/kg
SAR(1 g) = 0.305 mW/g; SAR(10 g) = 0.227 mW/g

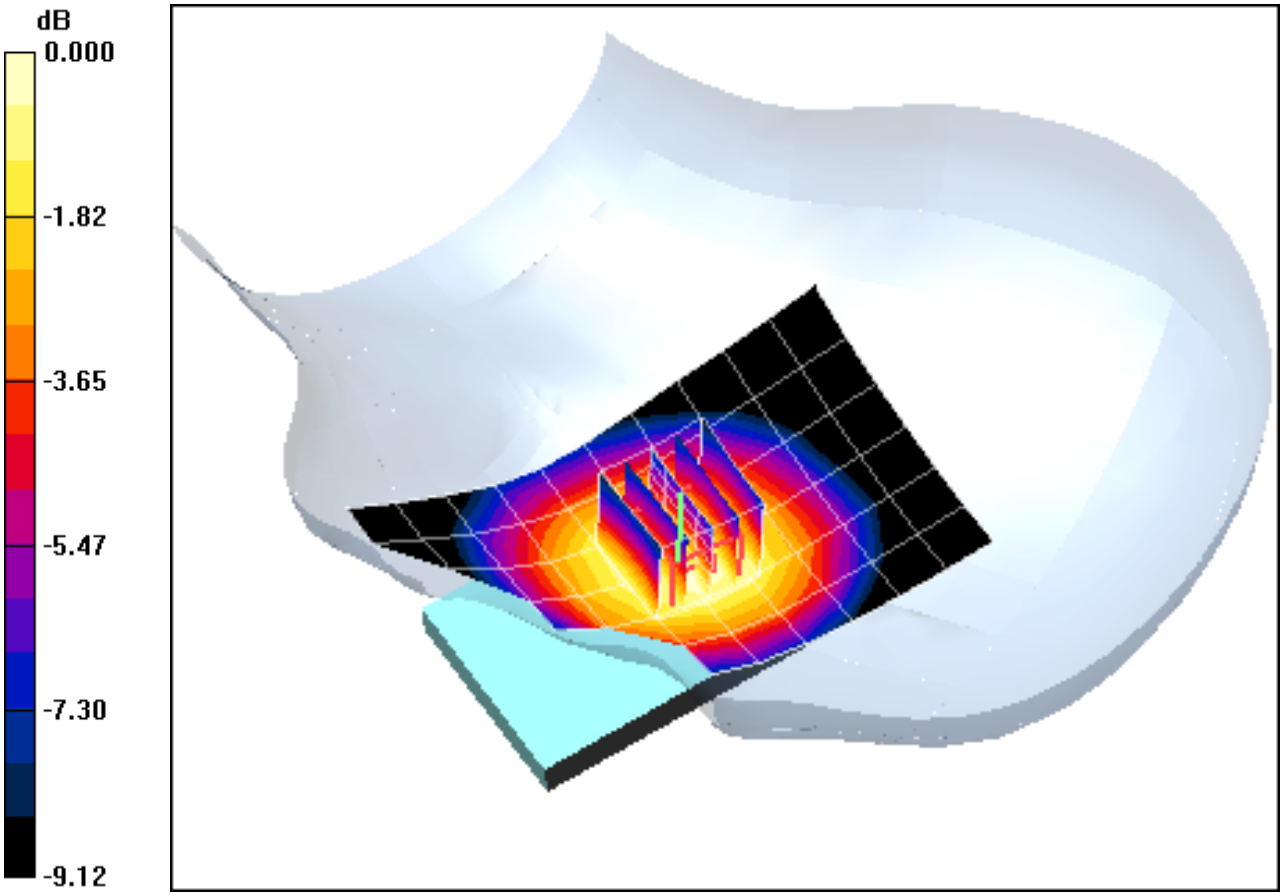

0 dB = 0.320mW/g

PCTEST ENGINEERING LABORATORY, INC.

DUT: BEJP999DW; Type: 850/1900 GSM/GPRS/EDGE and AWS WCDMA/HSPA Phone with Bluetooth and WLAN; Serial: SAR

Communication System: GSM850; Frequency: 836.6 MHz;Duty Cycle: 1:8.3
Medium: 835 Brain Medium parameters used (interpolated):
f = 836.6 MHz; σ = 0.88 mho/m; ε_r = 39.8; ρ = 1000 kg/m^3
Phantom section: Left Section

Test Date: 12-13-2010; Ambient Temp: 23.5°C; Tissue Temp: 22.2°C

Probe: EX3DV4 - SN3550; ConvF(8.28, 8.28, 8.28); Calibrated: 1/26/2010
Sensor-Surface: 4mm (Mechanical Surface Detection)
Electronics: DAE4 Sn649; Calibrated: 1/22/2010
Phantom: SAM Main; Type: SAM 4.0; Serial: TP-1114
Measurement SW: DASY4, V4.7 Build 80; Postprocessing SW: SEMCAD, V1.8 Build 186

Mode: GSM 850, Left Head, Tilt, Mid.ch

Area Scan (7x12x1): Measurement grid: dx=15mm, dy=15mm
Zoom Scan (5x5x7)/Cube 0: Measurement grid: dx=8mm, dy=8mm, dz=5mm
Reference Value = 14.6 V/m
Peak SAR (extrapolated) = 0.222 W/kg
SAR(1 g) = 0.178 mW/g; SAR(10 g) = 0.134 mW/g

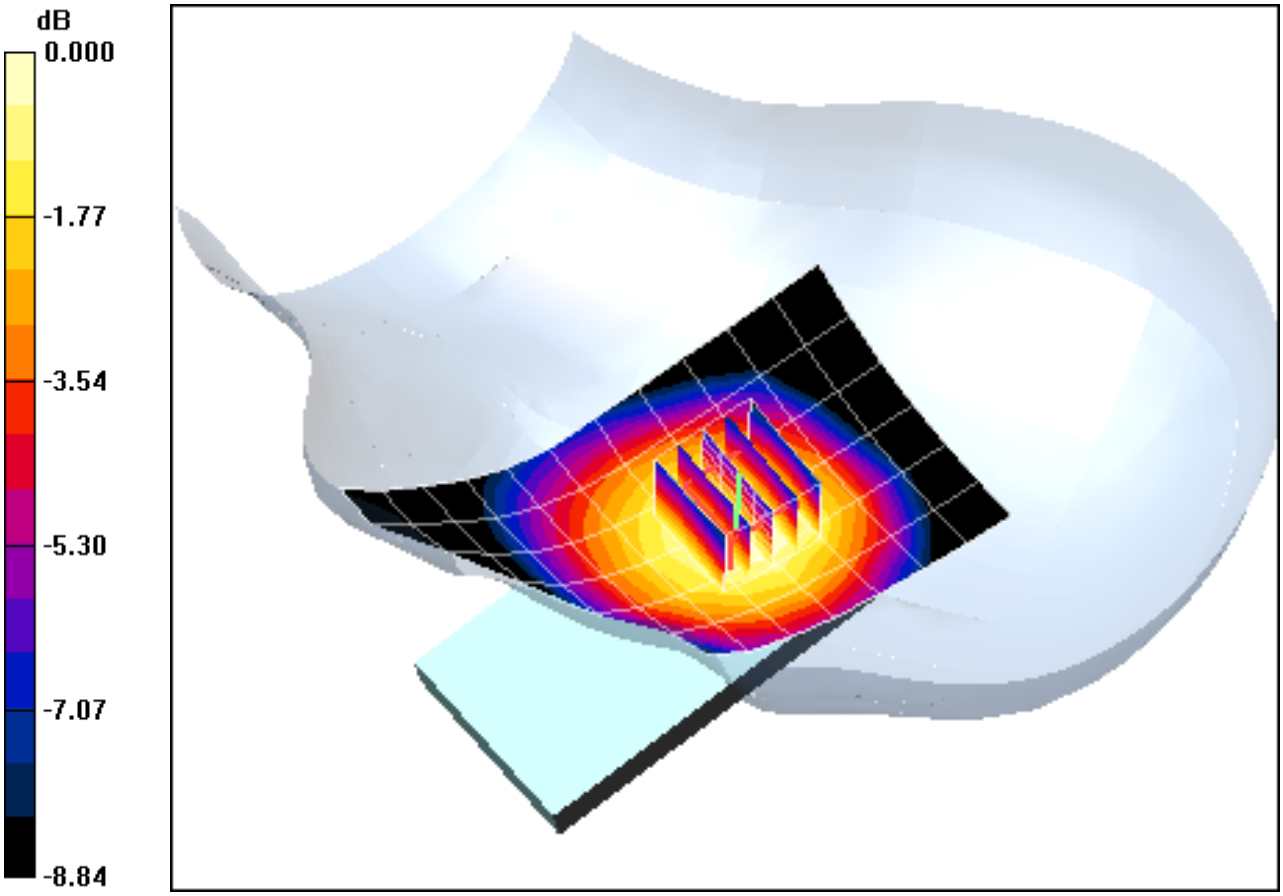

0 dB = 0.188mW/g

PCTEST ENGINEERING LABORATORY, INC.

DUT: BEJP999DW; Type: 850/1900 GSM/GPRS/EDGE and AWS WCDMA/HSPA Phone with Bluetooth and WLAN; Serial: SAR

Communication System: GSM1900; Frequency: 1880 MHz;Duty Cycle: 1:8.3
Medium: 1900 Brain Medium parameters used:
f = 1880 MHz; σ = 1.38 mho/m; ε_r = 39.6; ρ = 1000 kg/m^3
Phantom section: Right Section

Test Date: 12-13-2010; Ambient Temp: 22.1°C; Tissue Temp: 20.9°C

Probe: EX3DV4 - SN3561; ConvF(6.69, 6.69, 6.69); Calibrated: 8/19/2010
Sensor-Surface: 4mm (Mechanical Surface Detection)
Electronics: DAE4 Sn665; Calibrated: 4/21/2010
Phantom: SAM with CRP; Type: SAM; Serial: TP1375
Measurement SW: DASY4, V4.7 Build 80; Postprocessing SW: SEMCAD, V1.8 Build 186

Mode: GSM 1900, Right Head, Touch, Mid.ch

Area Scan (7x12x1): Measurement grid: dx=15mm, dy=15mm
Zoom Scan (5x5x7)/Cube 0: Measurement grid: dx=8mm, dy=8mm, dz=5mm
Reference Value = 12.8 V/m
Peak SAR (extrapolated) = 0.388 W/kg
SAR(1 g) = 0.247 mW/g; SAR(10 g) = 0.151 mW/g

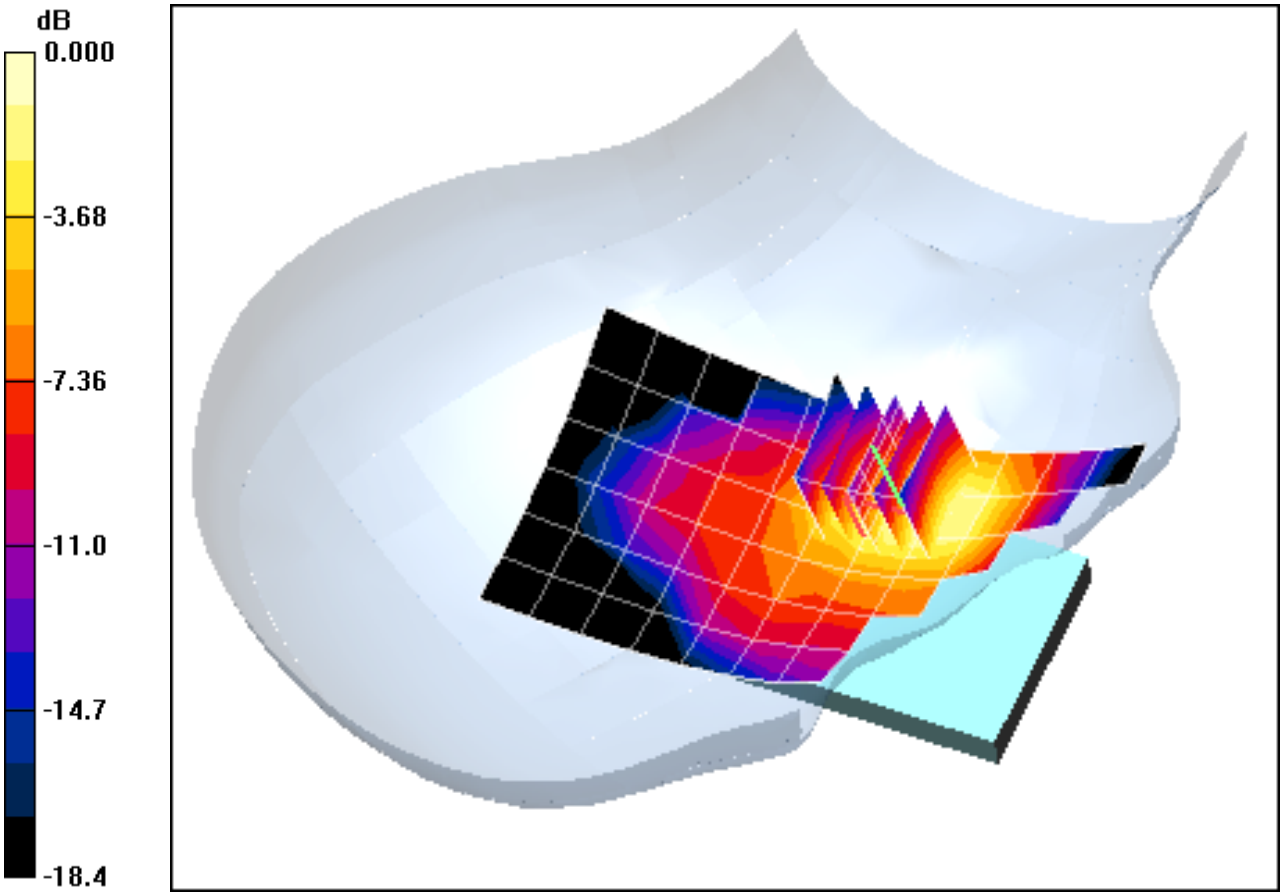

0 dB = 0.267mW/g

PCTEST ENGINEERING LABORATORY, INC.

DUT: BEJP999DW; Type: 850/1900 GSM/GPRS/EDGE and AWS WCDMA/HSPA Phone with Bluetooth and WLAN; Serial: SAR

Communication System: GSM1900; Frequency: 1880 MHz;Duty Cycle: 1:8.3
Medium: 1900 Brain Medium parameters used:
f = 1880 MHz; σ = 1.38 mho/m; ε_r = 39.6; ρ = 1000 kg/m^3
Phantom section: Right Section

Test Date: 12-13-2010; Ambient Temp: 22.1°C; Tissue Temp: 20.9°C

Probe: EX3DV4 - SN3561; ConvF(6.69, 6.69, 6.69); Calibrated: 8/19/2010
Sensor-Surface: 4mm (Mechanical Surface Detection)
Electronics: DAE4 Sn665; Calibrated: 4/21/2010
Phantom: SAM with CRP; Type: SAM; Serial: TP1375
Measurement SW: DASY4, V4.7 Build 80; Postprocessing SW: SEMCAD, V1.8 Build 186

Mode: GSM 1900, Right Head, Touch, Mid.ch

Area Scan (7x12x1): Measurement grid: dx=15mm, dy=15mm
Zoom Scan (5x5x7)/Cube 0: Measurement grid: dx=8mm, dy=8mm, dz=5mm
Reference Value = 12.8 V/m
Peak SAR (extrapolated) = 0.388 W/kg
SAR(1 g) = 0.247 mW/g; SAR(10 g) = 0.151 mW/g

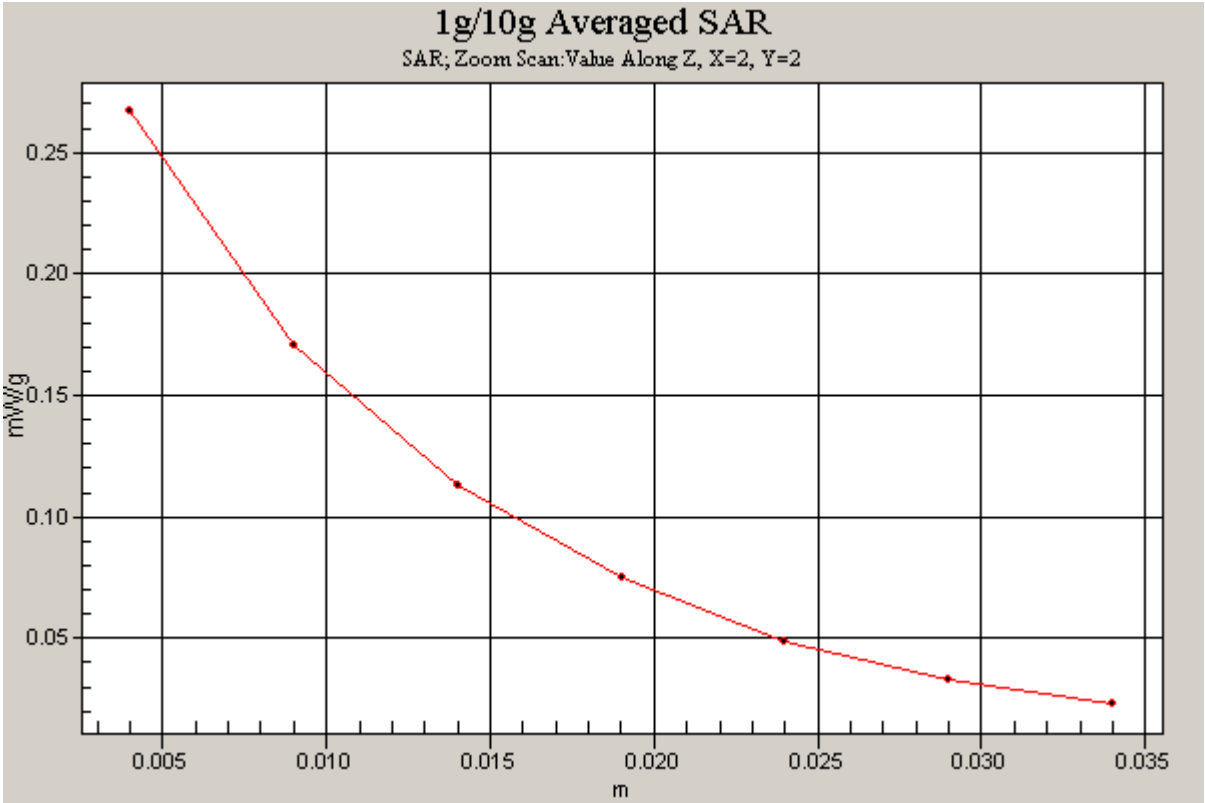

PCTEST ENGINEERING LABORATORY, INC.

DUT: BEJP999DW; Type: 850/1900 GSM/GPRS/EDGE and AWS WCDMA/HSPA Phone with Bluetooth and WLAN; Serial: SAR

Communication System: GSM1900; Frequency: 1880 MHz;Duty Cycle: 1:8.3
Medium: 1900 Brain Medium parameters used:
f = 1880 MHz; σ = 1.38 mho/m; ε_r = 39.6; ρ = 1000 kg/m^3
Phantom section: Right Section

Test Date: 12-13-2010; Ambient Temp: 22.1°C; Tissue Temp: 20.9°C

Probe: EX3DV4 - SN3561; ConvF(6.69, 6.69, 6.69); Calibrated: 8/19/2010
Sensor-Surface: 4mm (Mechanical Surface Detection)
Electronics: DAE4 Sn665; Calibrated: 4/21/2010
Phantom: SAM with CRP; Type: SAM; Serial: TP1375
Measurement SW: DASY4, V4.7 Build 80; Postprocessing SW: SEMCAD, V1.8 Build 186

Mode: GSM 1900, Right Head, Tilt, Mid.ch

Area Scan (7x12x1): Measurement grid: dx=15mm, dy=15mm
Zoom Scan (5x5x7)/Cube 0: Measurement grid: dx=8mm, dy=8mm, dz=5mm
Reference Value = 6.92 V/m
Peak SAR (extrapolated) = 0.101 W/kg
SAR(1 g) = 0.062 mW/g; SAR(10 g) = 0.037 mW/g

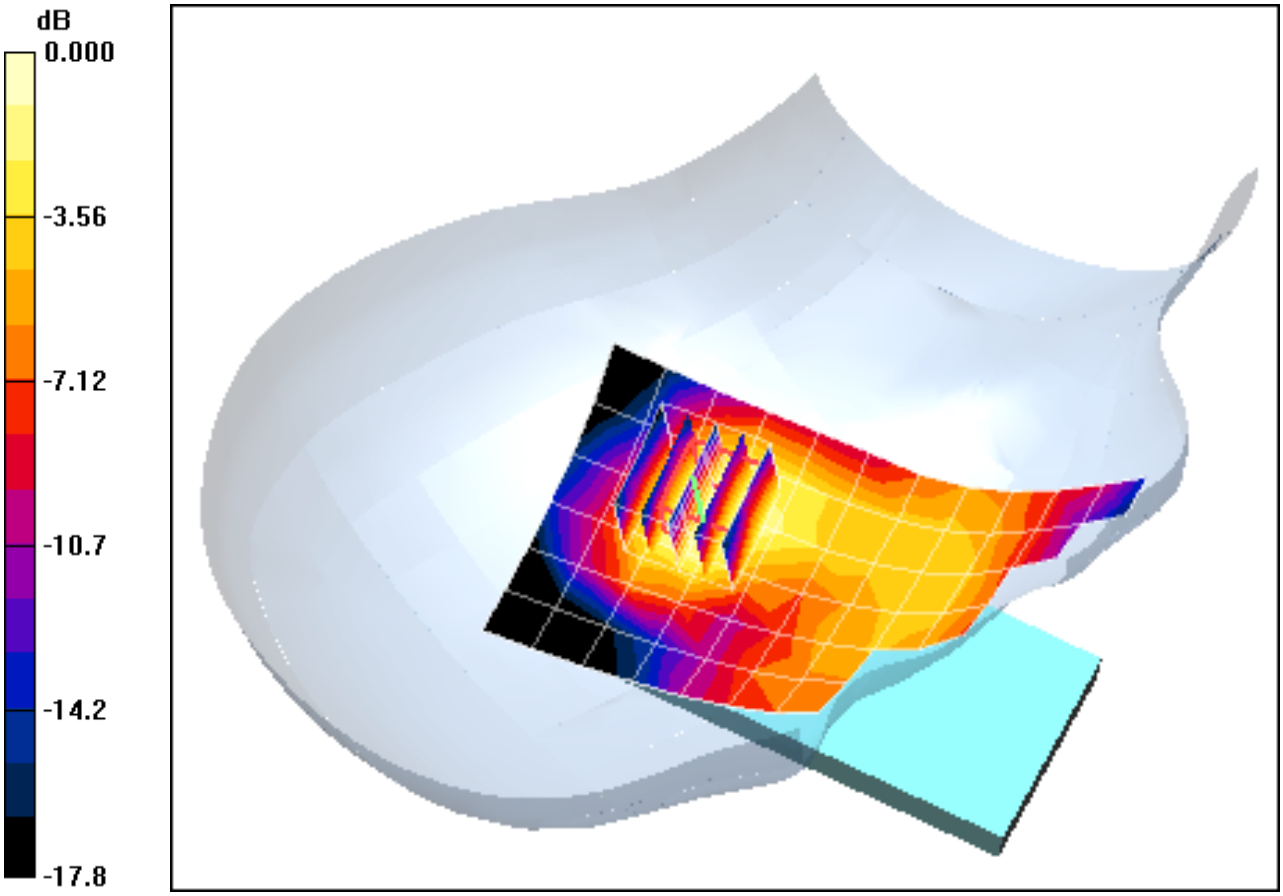

0 dB = 0.066mW/g

PCTEST ENGINEERING LABORATORY, INC.

DUT: BEJP999DW; Type: 850/1900 GSM/GPRS/EDGE and AWS WCDMA/HSPA Phone with Bluetooth and WLAN; Serial: SAR

Communication System: GSM1900; Frequency: 1880 MHz;Duty Cycle: 1:8.3
Medium: 1900 Brain Medium parameters used:
f = 1880 MHz; σ = 1.38 mho/m; ε_r = 39.6; ρ = 1000 kg/m^3
Phantom section: Left Section

Test Date: 12-13-2010; Ambient Temp: 22.1°C; Tissue Temp: 20.9°C

Probe: EX3DV4 - SN3561; ConvF(6.69, 6.69, 6.69); Calibrated: 8/19/2010
Sensor-Surface: 4mm (Mechanical Surface Detection)
Electronics: DAE4 Sn665; Calibrated: 4/21/2010
Phantom: SAM with CRP; Type: SAM; Serial: TP1375
Measurement SW: DASY4, V4.7 Build 80; Postprocessing SW: SEMCAD, V1.8 Build 186

Mode: GSM 1900, Left Head, Touch, Mid.ch

Area Scan (7x12x1): Measurement grid: dx=15mm, dy=15mm
Zoom Scan (5x5x7)/Cube 0: Measurement grid: dx=8mm, dy=8mm, dz=5mm
Reference Value = 10.4 V/m
Peak SAR (extrapolated) = 0.222 W/kg
SAR(1 g) = 0.142 mW/g; SAR(10 g) = 0.092 mW/g

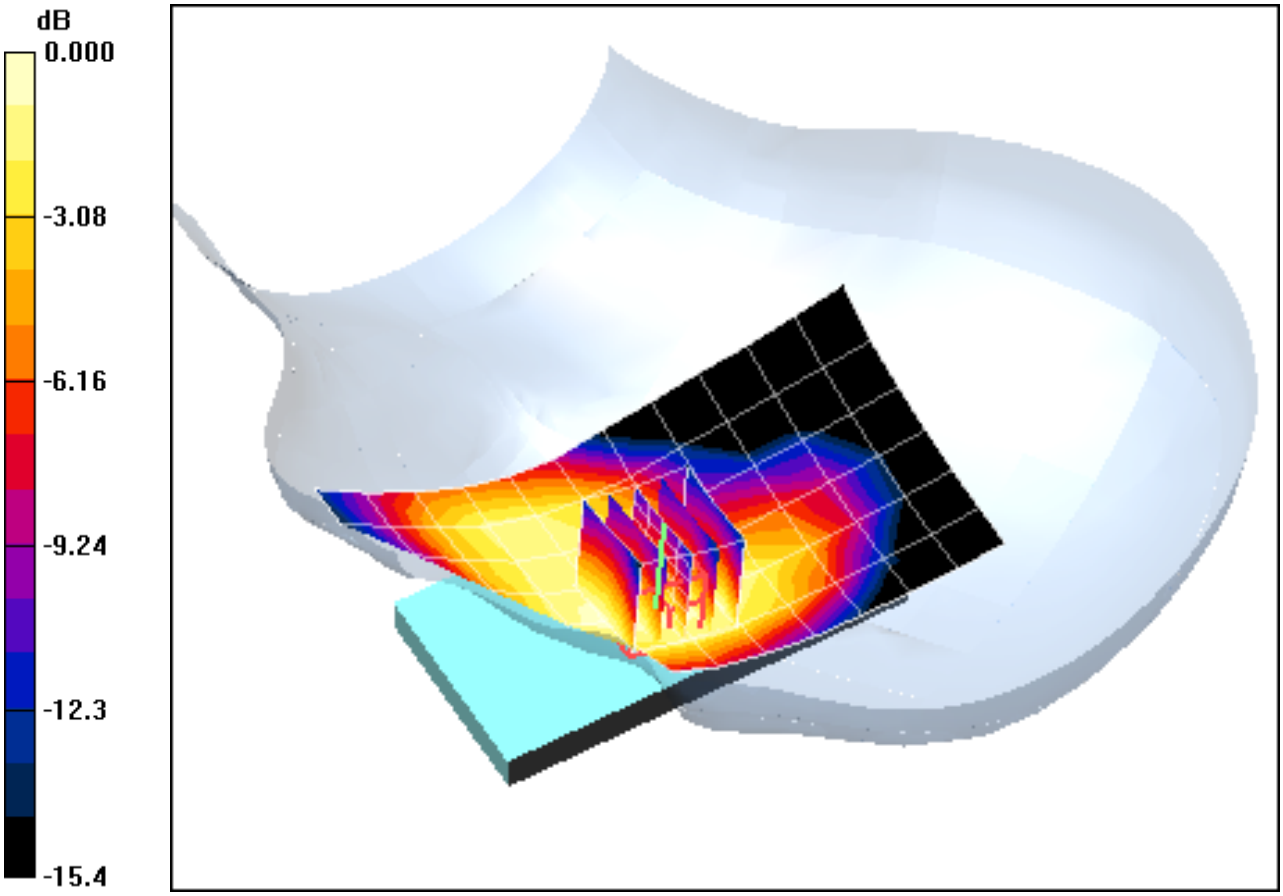

0 dB = 0.150mW/g

PCTEST ENGINEERING LABORATORY, INC.

DUT: BEJP999DW; Type: 850/1900 GSM/GPRS/EDGE and AWS WCDMA/HSPA Phone with Bluetooth and WLAN; Serial: SAR

Communication System: GSM1900; Frequency: 1880 MHz;Duty Cycle: 1:8.3
Medium: 1900 Brain Medium parameters used:
f = 1880 MHz; σ = 1.38 mho/m; ε_r = 39.6; ρ = 1000 kg/m^3
Phantom section: Left Section

Test Date: 12-13-2010; Ambient Temp: 22.1°C; Tissue Temp: 20.9°C

Probe: EX3DV4 - SN3561; ConvF(6.69, 6.69, 6.69); Calibrated: 8/19/2010
Sensor-Surface: 4mm (Mechanical Surface Detection)
Electronics: DAE4 Sn665; Calibrated: 4/21/2010
Phantom: SAM with CRP; Type: SAM; Serial: TP1375
Measurement SW: DASY4, V4.7 Build 80; Postprocessing SW: SEMCAD, V1.8 Build 186

Mode: GSM 1900, Left Head, Tilt, Mid.ch

Area Scan (7x12x1): Measurement grid: dx=15mm, dy=15mm
Zoom Scan (5x5x7)/Cube 0: Measurement grid: dx=8mm, dy=8mm, dz=5mm
Reference Value = 7.69 V/m
Peak SAR (extrapolated) = 0.128 W/kg
SAR(1 g) = 0.080 mW/g; SAR(10 g) = 0.047 mW/g

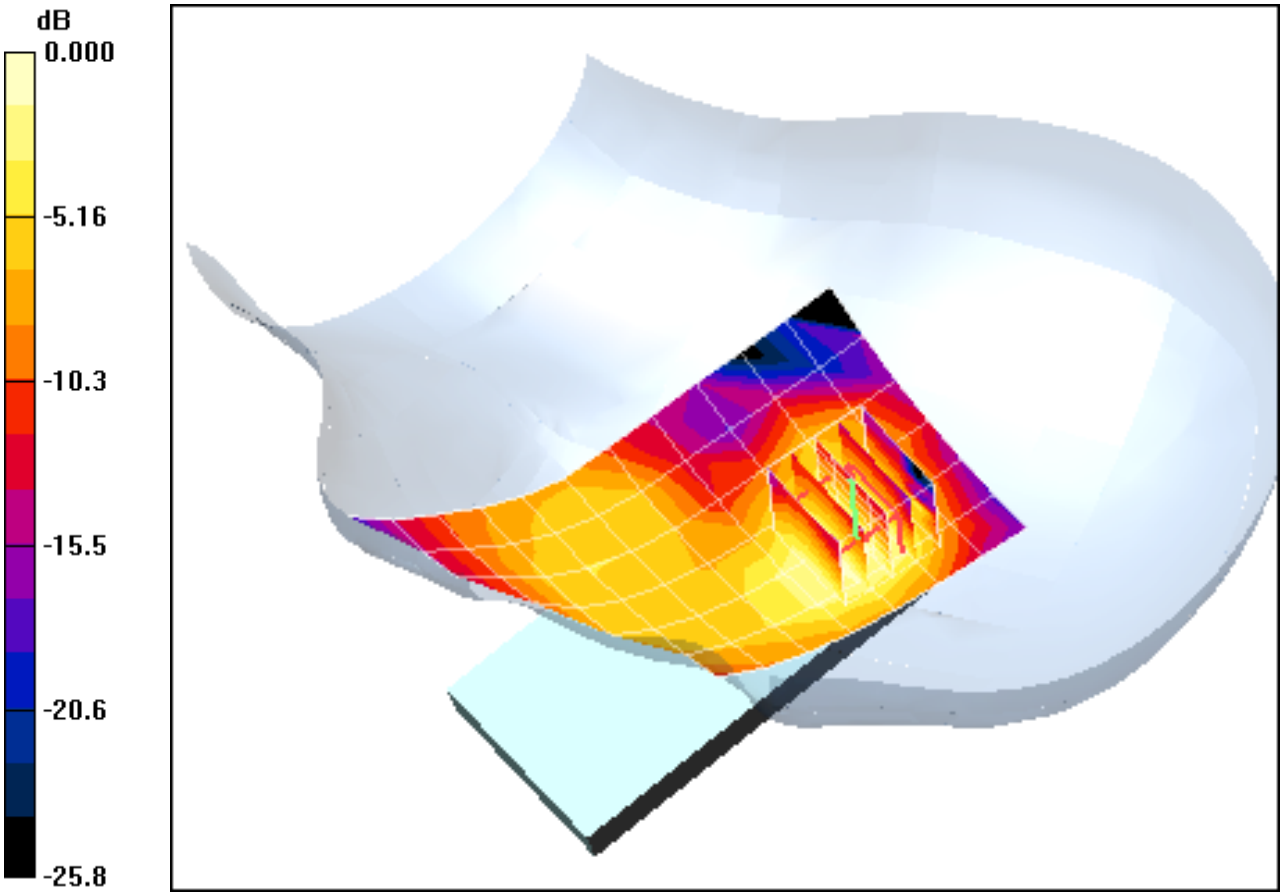

0 dB = 0.087mW/g

PCTEST ENGINEERING LABORATORY, INC.

DUT: BEJP999DW; Type: 850/1900 GSM/GPRS/EDGE and AWS WCDMA/HSPA Phone with Bluetooth and WLAN; Serial: SAR

Communication System: WCDMA1700; Frequency: 1730.4 MHz;Duty Cycle: 1:1
Medium: 1750 Brain Medium parameters used (interpolated):
f = 1730.4 MHz; σ = 1.36 mho/m; ε_r = 39.7; ρ = 1000 kg/m^3
Phantom section: Right Section

Test Date: 12-16-2010; Ambient Temp: 23.2°C; Tissue Temp: 21.6°C

Probe: EX3DV4 - SN3550; ConvF(7.03, 7.03, 7.03); Calibrated: 1/26/2010
Sensor-Surface: 4mm (Mechanical Surface Detection)
Electronics: DAE4 Sn649; Calibrated: 1/22/2010
Phantom: SAM Main; Type: SAM 4.0; Serial: TP-1114
Measurement SW: DASY4, V4.7 Build 80; Postprocessing SW: SEMCAD, V1.8 Build 186

Mode: WCDMA 1700, Right Head, Touch, Mid.ch

Area Scan (7x12x1): Measurement grid: dx=15mm, dy=15mm
Zoom Scan (5x5x7)/Cube 0: Measurement grid: dx=8mm, dy=8mm, dz=5mm
Reference Value = 18.5 V/m
Peak SAR (extrapolated) = 0.795 W/kg
SAR(1 g) = 0.512 mW/g; SAR(10 g) = 0.316 mW/g

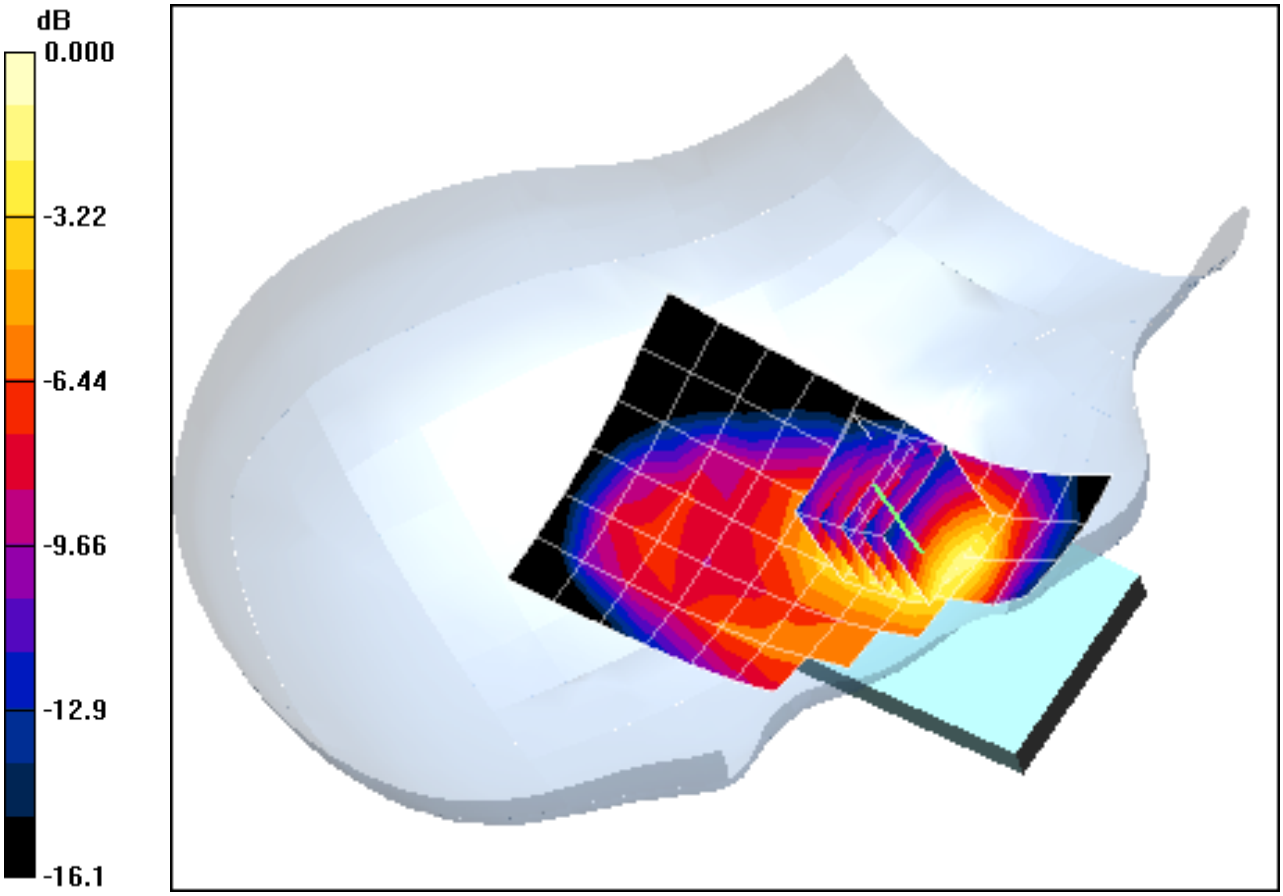

0 dB = 0.564mW/g

PCTEST ENGINEERING LABORATORY, INC.

DUT: BEJP999DW; Type: 850/1900 GSM/GPRS/EDGE and AWS WCDMA/HSPA Phone with Bluetooth and WLAN; Serial: SAR

Communication System: WCDMA1700; Frequency: 1730.4 MHz;Duty Cycle: 1:1
Medium: 1750 Brain Medium parameters used (interpolated):
f = 1730.4 MHz; σ = 1.36 mho/m; ε_r = 39.7; ρ = 1000 kg/m^3
Phantom section: Right Section

Test Date: 12-16-2010; Ambient Temp: 23.2°C; Tissue Temp: 21.6°C

Probe: EX3DV4 - SN3550; ConvF(7.03, 7.03, 7.03); Calibrated: 1/26/2010
Sensor-Surface: 4mm (Mechanical Surface Detection)
Electronics: DAE4 Sn649; Calibrated: 1/22/2010
Phantom: SAM Main; Type: SAM 4.0; Serial: TP-1114
Measurement SW: DASY4, V4.7 Build 80; Postprocessing SW: SEMCAD, V1.8 Build 186

Mode: WCDMA 1700, Right Head, Touch, Mid.ch

Area Scan (7x12x1): Measurement grid: dx=15mm, dy=15mm
Zoom Scan (5x5x7)/Cube 0: Measurement grid: dx=8mm, dy=8mm, dz=5mm
Reference Value = 18.5 V/m
Peak SAR (extrapolated) = 0.795 W/kg
SAR(1 g) = 0.512 mW/g; SAR(10 g) = 0.316 mW/g

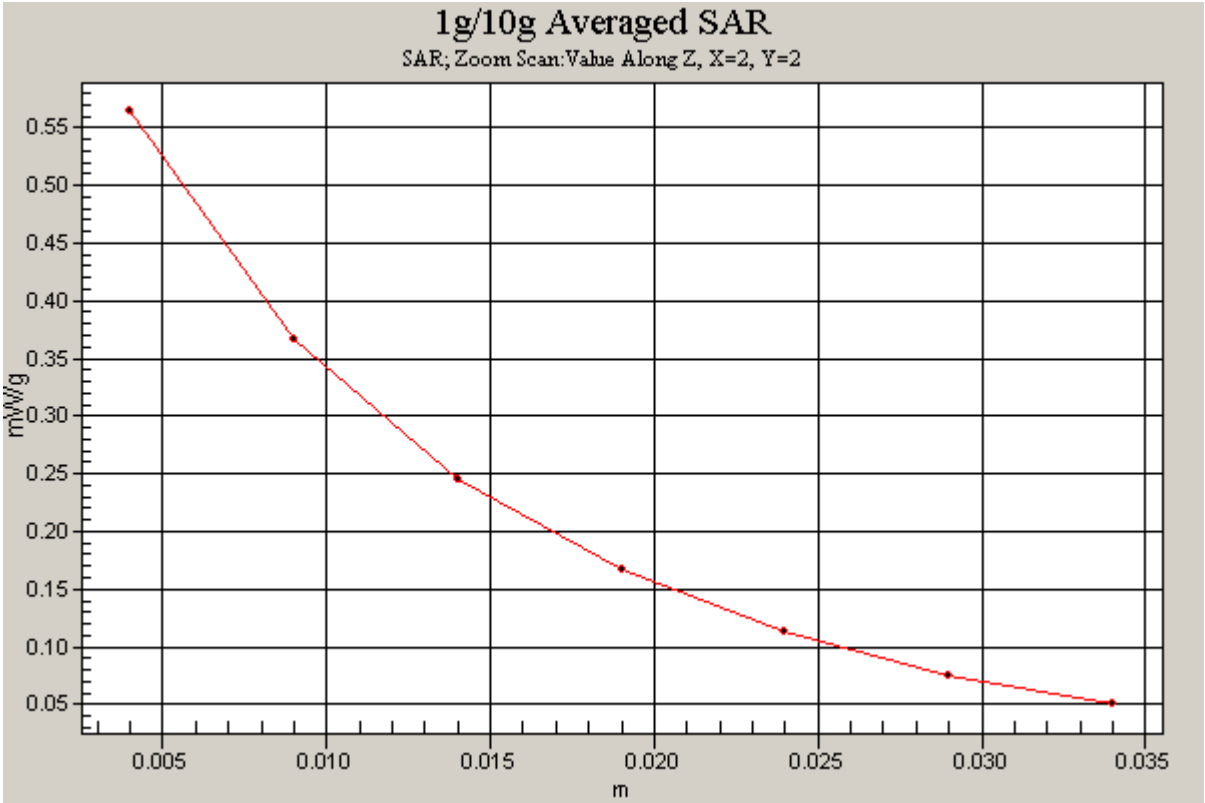

PCTEST ENGINEERING LABORATORY, INC.

DUT: BEJP999DW; Type: 850/1900 GSM/GPRS/EDGE and AWS WCDMA/HSPA Phone with Bluetooth and WLAN; Serial: SAR

Communication System: WCDMA1700; Frequency: 1730.4 MHz;Duty Cycle: 1:1
Medium: 1750 Brain Medium parameters used (interpolated):
f = 1730.4 MHz; σ = 1.36 mho/m; ε_r = 39.7; ρ = 1000 kg/m^3
Phantom section: Right Section

Test Date: 12-16-2010; Ambient Temp: 23.2°C; Tissue Temp: 21.6°C

Probe: EX3DV4 - SN3550; ConvF(7.03, 7.03, 7.03); Calibrated: 1/26/2010
Sensor-Surface: 4mm (Mechanical Surface Detection)
Electronics: DAE4 Sn649; Calibrated: 1/22/2010
Phantom: SAM Main; Type: SAM 4.0; Serial: TP-1114
Measurement SW: DASY4, V4.7 Build 80; Postprocessing SW: SEMCAD, V1.8 Build 186

Mode: WCDMA 1700, Right Head, Tilt, Mid.ch

Area Scan (7x12x1): Measurement grid: dx=15mm, dy=15mm
Zoom Scan (5x5x7)/Cube 0: Measurement grid: dx=8mm, dy=8mm, dz=5mm
Reference Value = 12.5 V/m
Peak SAR (extrapolated) = 0.338 W/kg
SAR(1 g) = 0.211 mW/g; SAR(10 g) = 0.125 mW/g

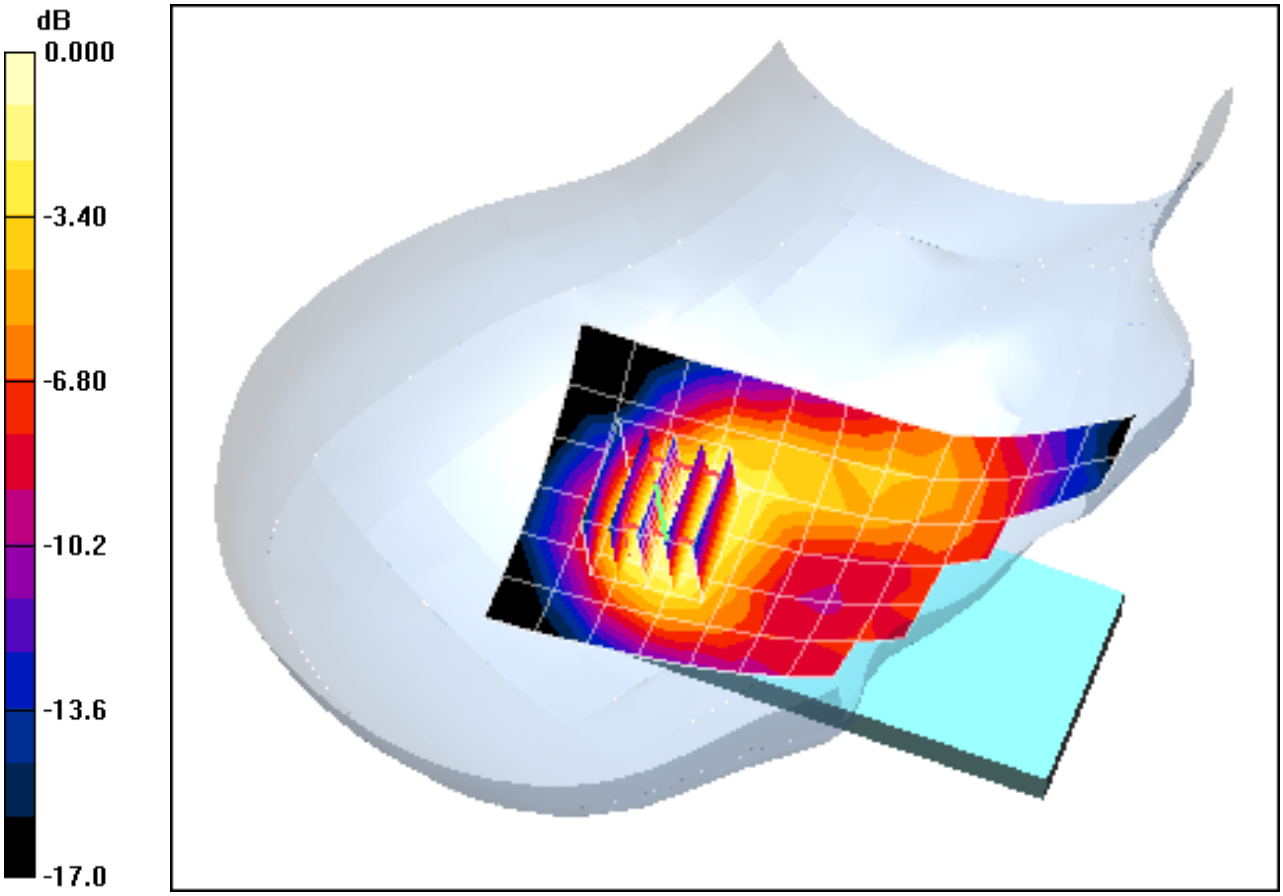

0 dB = 0.207mW/g

PCTEST ENGINEERING LABORATORY, INC.

DUT: BEJP999DW; Type: 850/1900 GSM/GPRS/EDGE and AWS WCDMA/HSPA Phone with Bluetooth and WLAN; Serial: SAR

Communication System: WCDMA1700; Frequency: 1730.4 MHz;Duty Cycle: 1:1
Medium: 1750 Brain Medium parameters used (interpolated):
f = 1730.4 MHz; σ = 1.36 mho/m; ε_r = 39.7; ρ = 1000 kg/m^3
Phantom section: Left Section

Test Date: 12-16-2010; Ambient Temp: 23.2°C; Tissue Temp: 21.6°C

Probe: EX3DV4 - SN3550; ConvF(7.03, 7.03, 7.03); Calibrated: 1/26/2010
Sensor-Surface: 4mm (Mechanical Surface Detection)
Electronics: DAE4 Sn649; Calibrated: 1/22/2010
Phantom: SAM Main; Type: SAM 4.0; Serial: TP-1406
Measurement SW: DASY4, V4.7 Build 80; Postprocessing SW: SEMCAD, V1.8 Build 186

Mode: WCDMA 1700, Left Head, Touch, Mid.ch

Area Scan (7x12x1): Measurement grid: dx=15mm, dy=15mm
Zoom Scan (5x5x7)/Cube 0: Measurement grid: dx=8mm, dy=8mm, dz=5mm
Reference Value = 16.1 V/m
Peak SAR (extrapolated) = 0.540 W/kg
SAR(1 g) = 0.330 mW/g; SAR(10 g) = 0.201 mW/g

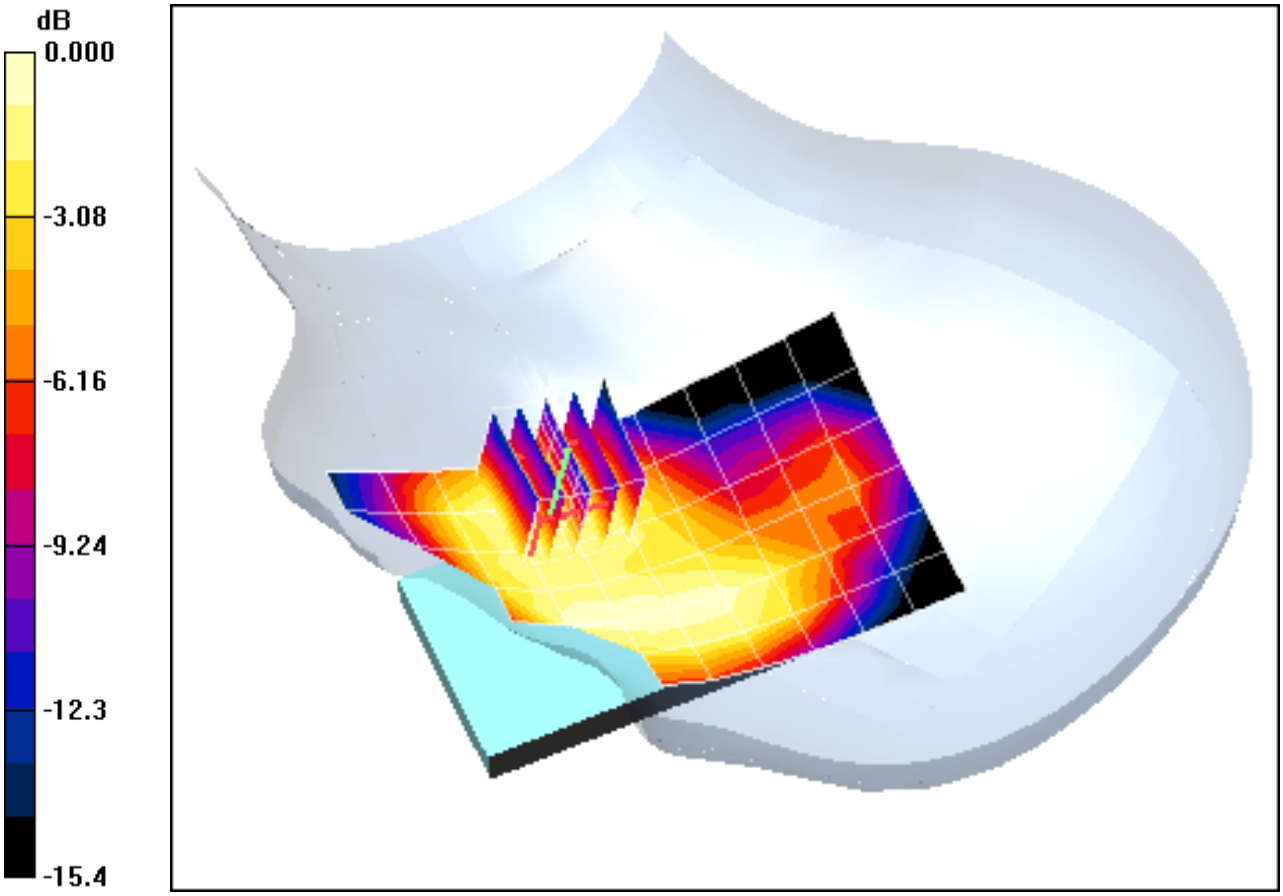

0 dB = 0.364mW/g

PCTEST ENGINEERING LABORATORY, INC.

DUT: BEJP999DW; Type: 850/1900 GSM/GPRS/EDGE and AWS WCDMA/HSPA Phone with Bluetooth and WLAN; Serial: SAR

Communication System: WCDMA1700; Frequency: 1730.4 MHz;Duty Cycle: 1:1
Medium: 1750 Brain Medium parameters used (interpolated):
f = 1730.4 MHz; σ = 1.36 mho/m; ε_r = 39.7; ρ = 1000 kg/m^3
Phantom section: Left Section

Test Date: 12-16-2010; Ambient Temp: 23.2°C; Tissue Temp: 21.6°C

Probe: EX3DV4 - SN3550; ConvF(7.03, 7.03, 7.03); Calibrated: 1/26/2010
Sensor-Surface: 4mm (Mechanical Surface Detection)
Electronics: DAE4 Sn649; Calibrated: 1/22/2010
Phantom: SAM Main; Type: SAM 4.0; Serial: TP-1406
Measurement SW: DASY4, V4.7 Build 80; Postprocessing SW: SEMCAD, V1.8 Build 186

Mode: WCDMA 1700, Left Head, Tilt, Mid.ch

Area Scan (7x12x1): Measurement grid: dx=15mm, dy=15mm
Zoom Scan (5x5x7)/Cube 0: Measurement grid: dx=8mm, dy=8mm, dz=5mm
Reference Value = 12.4 V/m
Peak SAR (extrapolated) = 0.315 W/kg
SAR(1 g) = 0.197 mW/g; SAR(10 g) = 0.118 mW/g

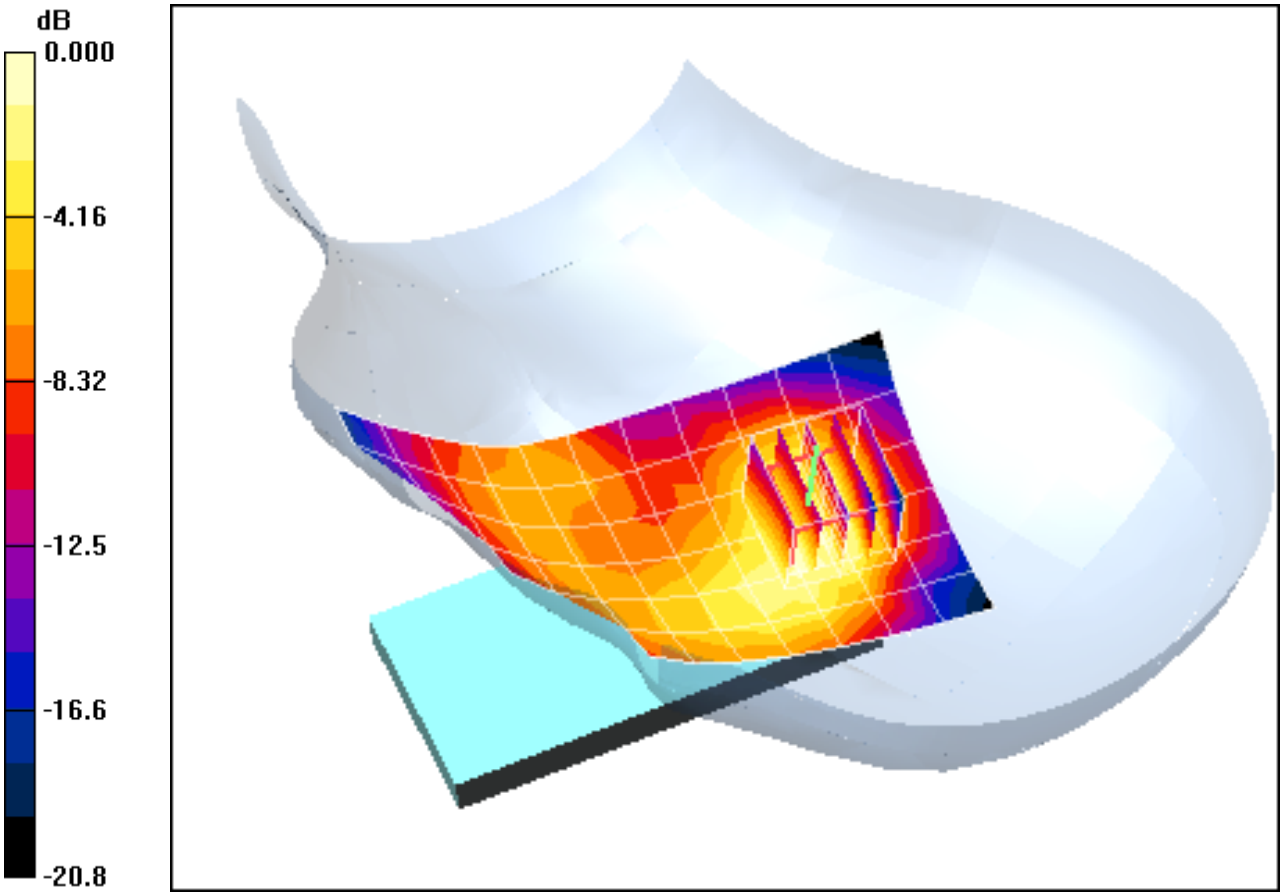

0 dB = 0.211mW/g

PCTEST ENGINEERING LABORATORY, INC.

DUT: BEJP999DW; Type: 850/1900 GSM/GPRS/EDGE and AWS WCDMA/HSPA Phone with Bluetooth and WLAN; Serial: 011KPAE000480

Communication System: IEEE 802.11b; Frequency: 2462 MHz;Duty Cycle: 1:1
Medium: 2450 Head Medium parameters used (interpolated):
f = 2462 MHz; σ = 1.89 mho/m; ε_r = 39.6; ρ = 1000 kg/m^3
Phantom section: Right Section

Test Date: 02-15-2011; Ambient Temp: 24.0 °C; Tissue Temp: 22.2 °C

Probe: EX3DV4 - SN3561; ConvF(6.11, 6.11, 6.11); Calibrated: 8/19/2010
Sensor-Surface: 3mm (Mechanical Surface Detection)
Electronics: DAE4 Sn665; Calibrated: 4/21/2010
Phantom: SAM with CRP; Type: SAM; Serial: TP1375
Measurement SW: DASY4, V4.7 Build 80; Postprocessing SW: SEMCAD, V1.8 Build 186

Mode: IEE 802.11b, Right Head, Touch, Ch 11, 1 Mbps

Area Scan (7x14x1): Measurement grid: dx=15mm, dy=15mm
Zoom Scan (5x5x7)/Cube 0: Measurement grid: dx=8mm, dy=8mm, dz=5mm
Reference Value = 20.2 V/m
Peak SAR (extrapolated) = 1.81 W/kg
SAR(1 g) = 0.826 mW/g; SAR(10 g) = 0.408 mW/g

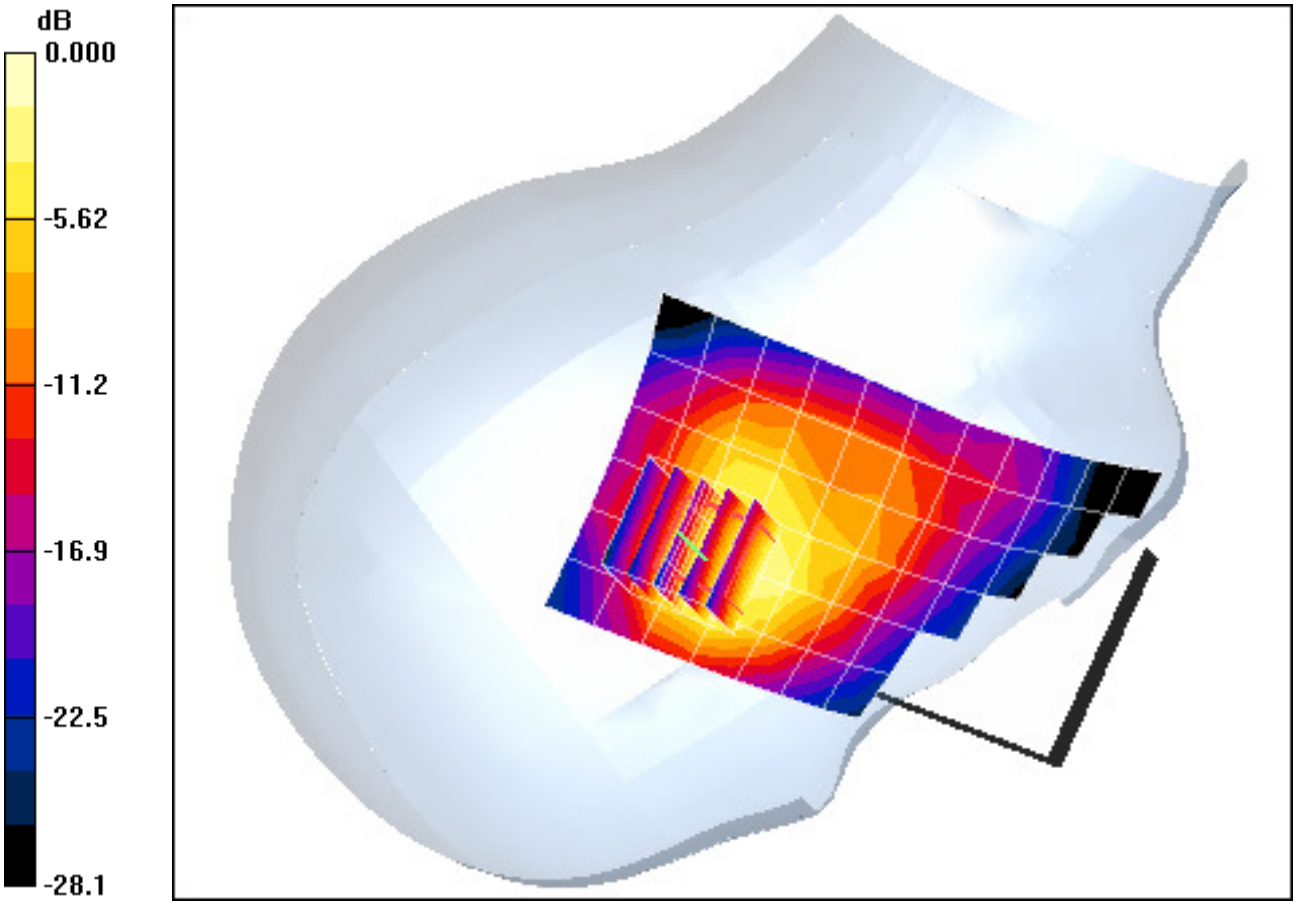

0 dB = 1.03mW/g

PCTEST ENGINEERING LABORATORY, INC.

DUT: BEJP999DW; Type: 850/1900 GSM/GPRS/EDGE and AWS WCDMA/HSPA Phone with Bluetooth and WLAN; Serial: 011KPAE000480

Communication System: IEEE 802.11b; Frequency: 2462 MHz;Duty Cycle: 1:1
Medium: 2450 Head Medium parameters used (interpolated):
f = 2462 MHz; σ = 1.89 mho/m; ε_r = 39.6; ρ = 1000 kg/m^3
Phantom section: Right Section

Test Date: 02-15-2011; Ambient Temp: 24.0 °C; Tissue Temp: 22.2 °C

Probe: EX3DV4 - SN3561; ConvF(6.11, 6.11, 6.11); Calibrated: 8/19/2010
Sensor-Surface: 3mm (Mechanical Surface Detection)
Electronics: DAE4 Sn665; Calibrated: 4/21/2010
Phantom: SAM with CRP; Type: SAM; Serial: TP1375
Measurement SW: DASY4, V4.7 Build 80; Postprocessing SW: SEMCAD, V1.8 Build 186

Mode: IEE 802.11b, Right Head, Touch, Ch 11, 1 Mbps

Area Scan (7x14x1): Measurement grid: dx=15mm, dy=15mm
Zoom Scan (5x5x7)/Cube 0: Measurement grid: dx=8mm, dy=8mm, dz=5mm
Reference Value = 20.2 V/m
Peak SAR (extrapolated) = 1.81 W/kg
SAR(1 g) = 0.826 mW/g; SAR(10 g) = 0.408 mW/g

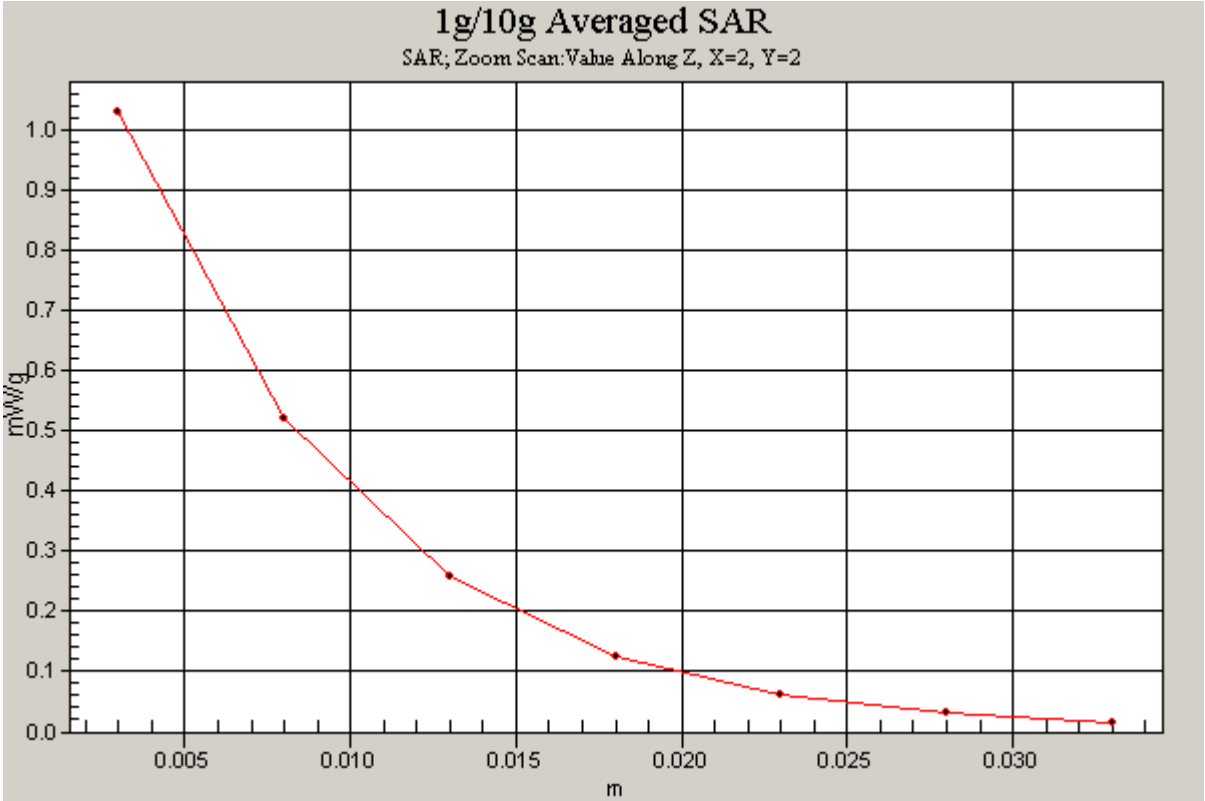

PCTEST ENGINEERING LABORATORY, INC.

DUT: BEJP999DW; Type: 850/1900 GSM/GPRS/EDGE and AWS WCDMA/HSPA Phone with Bluetooth and WLAN; Serial: 011KPAE000480

Communication System: IEEE 802.11b; Frequency: 2462 MHz;Duty Cycle: 1:1
Medium: 2450 Head Medium parameters used (interpolated):
f = 2462 MHz; σ = 1.89 mho/m; ε_r = 39.6; ρ = 1000 kg/m^3
Phantom section: Right Section

Test Date: 02-15-2011; Ambient Temp: 24.0 °C; Tissue Temp: 22.2 °C

Probe: EX3DV4 - SN3561; ConvF(6.11, 6.11, 6.11); Calibrated: 8/19/2010
Sensor-Surface: 3mm (Mechanical Surface Detection)
Electronics: DAE4 Sn665; Calibrated: 4/21/2010
Phantom: SAM with CRP; Type: SAM; Serial: TP1375
Measurement SW: DASY4, V4.7 Build 80; Postprocessing SW: SEMCAD, V1.8 Build 186

Mode: IEEE 802.11b, Right Head, Tilt, Ch 11, 1 Mbps

Area Scan (7x14x1): Measurement grid: dx=15mm, dy=15mm
Zoom Scan (5x5x7)/Cube 0: Measurement grid: dx=8mm, dy=8mm, dz=5mm
Reference Value = 14.7 V/m
Peak SAR (extrapolated) = 0.851 W/kg
SAR(1 g) = 0.394 mW/g; SAR(10 g) = 0.187 mW/g

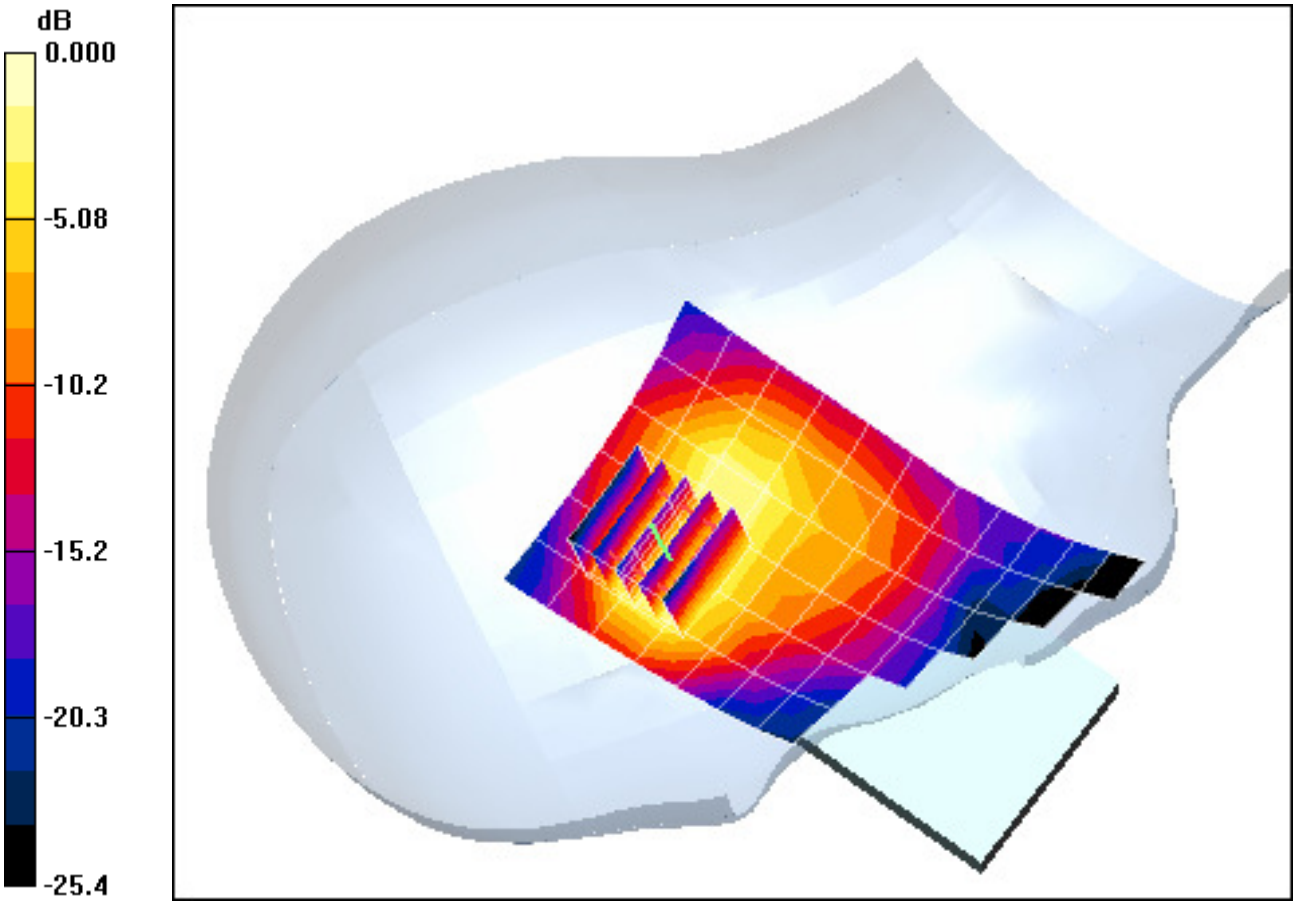

0 dB = 0.492mW/g

PCTEST ENGINEERING LABORATORY, INC.

DUT: BEJP999DW; Type: 850/1900 GSM/GPRS/EDGE and AWS WCDMA/HSPA Phone with Bluetooth and WLAN; Serial: 011KPAE000480

Communication System: IEEE 802.11b; Frequency: 2462 MHz;Duty Cycle: 1:1
Medium: 2450 Head Medium parameters used (interpolated):
f = 2462 MHz; σ = 1.89 mho/m; ε_r = 39.6; ρ = 1000 kg/m^3
Phantom section: Left Section

Test Date: 02-15-2011; Ambient Temp: 24.0 °C; Tissue Temp: 22.2 °C

Probe: EX3DV4 - SN3561; ConvF(6.11, 6.11, 6.11); Calibrated: 8/19/2010
Sensor-Surface: 3mm (Mechanical Surface Detection)
Electronics: DAE4 Sn665; Calibrated: 4/21/2010
Phantom: SAM with CRP; Type: SAM; Serial: TP1375
Measurement SW: DASY4, V4.7 Build 80; Postprocessing SW: SEMCAD, V1.8 Build 186

Mode: IEEE 802.11b, Left Head, Touch, Ch 11, 1 Mbps

Area Scan (7x12x1): Measurement grid: dx=15mm, dy=15mm
Zoom Scan (5x5x7)/Cube 0: Measurement grid: dx=8mm, dy=8mm, dz=5mm
Reference Value = 14.8 V/m
Peak SAR (extrapolated) = 0.751 W/kg
SAR(1 g) = 0.402 mW/g; SAR(10 g) = 0.224 mW/g

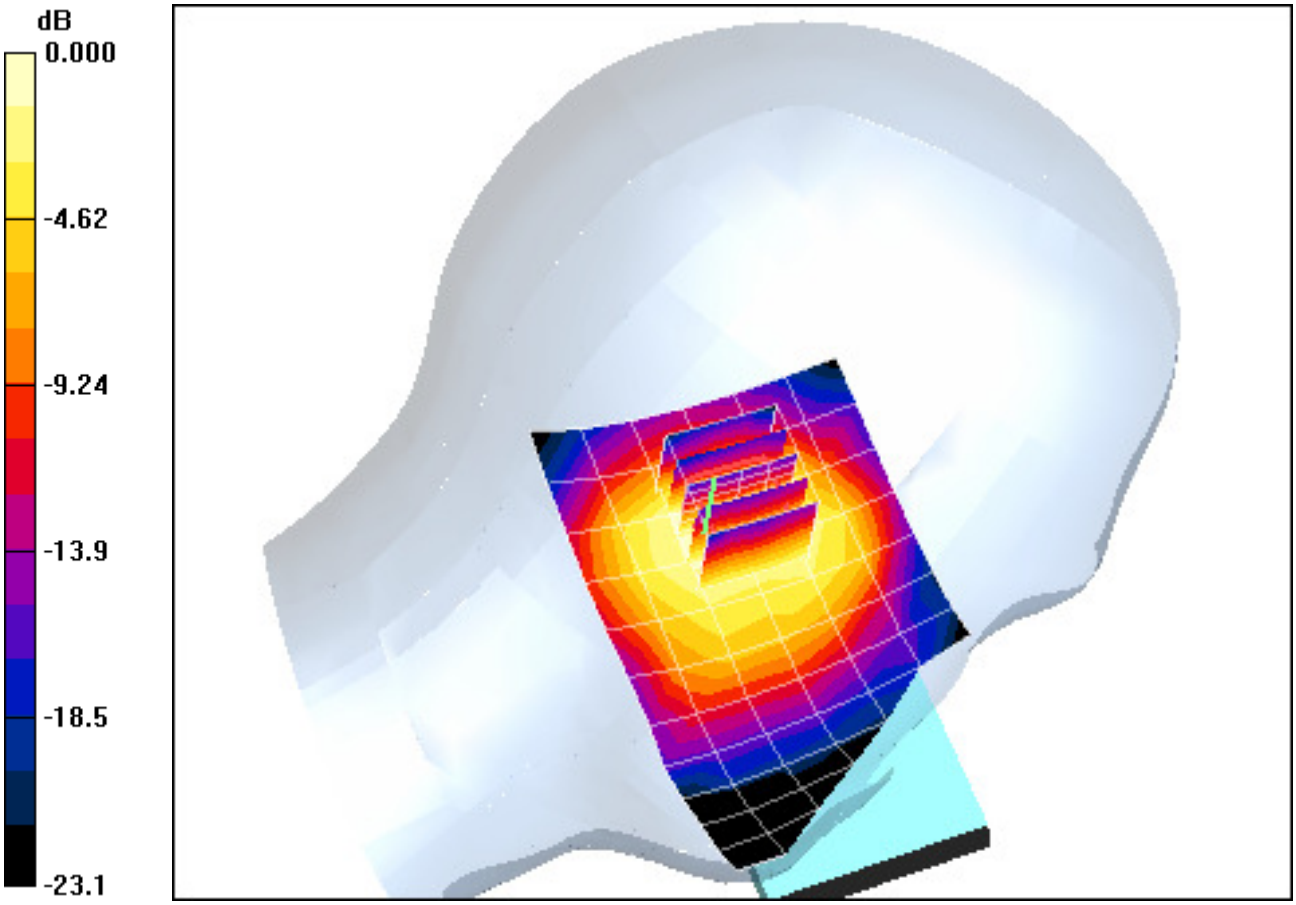

0 dB = 0.502mW/g

PCTEST ENGINEERING LABORATORY, INC.

DUT: BEJP999DW; Type: 850/1900 GSM/GPRS/EDGE and AWS WCDMA/HSPA Phone with Bluetooth and WLAN; Serial: 011KPAE000480

Communication System: IEEE 802.11b; Frequency: 2462 MHz;Duty Cycle: 1:1
Medium: 2450 Head Medium parameters used (interpolated):
f = 2462 MHz; σ = 1.89 mho/m; ε_r = 39.6; ρ = 1000 kg/m^3
Phantom section: Left Section

Test Date: 02-15-2011; Ambient Temp: 24.0 °C; Tissue Temp: 22.2 °C

Probe: EX3DV4 - SN3561; ConvF(6.11, 6.11, 6.11); Calibrated: 8/19/2010
Sensor-Surface: 3mm (Mechanical Surface Detection)
Electronics: DAE4 Sn665; Calibrated: 4/21/2010
Phantom: SAM with CRP; Type: SAM; Serial: TP1375
Measurement SW: DASY4, V4.7 Build 80; Postprocessing SW: SEMCAD, V1.8 Build 186

Mode: IEEE 802.11b, Left Head, Tilt, Ch 11, 1 Mbps

Area Scan (7x11x1): Measurement grid: dx=15mm, dy=15mm
Zoom Scan (5x5x7)/Cube 0: Measurement grid: dx=8mm, dy=8mm, dz=5mm
Reference Value = 13.4 V/m
Peak SAR (extrapolated) = 0.618 W/kg
SAR(1 g) = 0.321 mW/g; SAR(10 g) = 0.172 mW/g

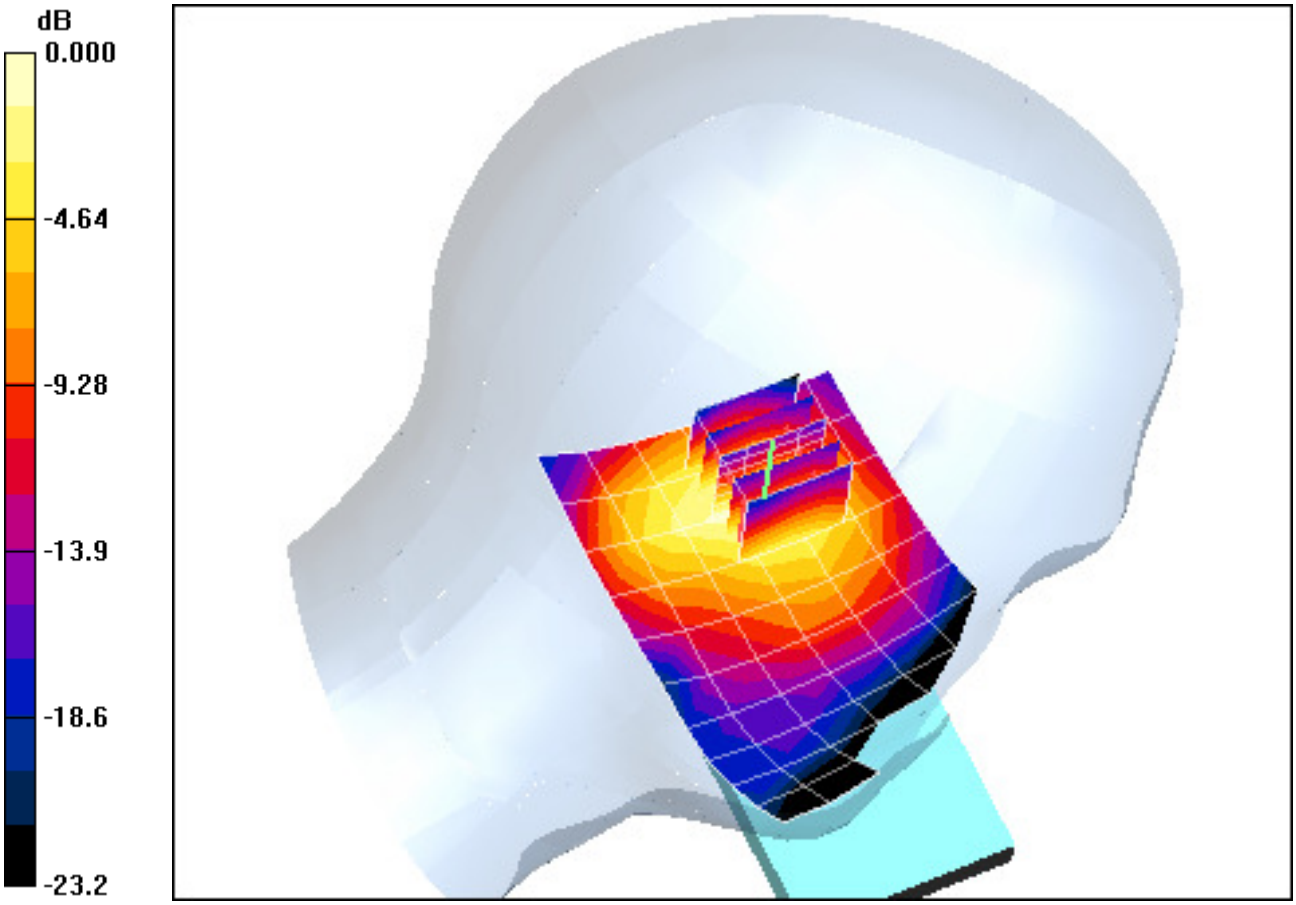

0 dB = 0.382mW/g

PCTEST ENGINEERING LABORATORY, INC.

DUT: BEJP999DW; Type: 850/1900 GSM/GPRS/EDGE and AWS WCDMA/HSPA Phone with Bluetooth and WLAN; Serial: 011KPAE000480

Communication System: GSM850 GPRS; 2 Tx slots; Frequency: 836.6 MHz;Duty Cycle: 1:4.15
Medium: 835 Body Medium parameters used (interpolated):
f = 836.6 MHz; σ = 0.994 mho/m; ε_r = 55.3; ρ = 1000 kg/m^3
Phantom section: Flat Section; Space: 1.0 cm

Test Date: 12-20-2010; Ambient Temp: 23.8°C; Tissue Temp: 21.9°C

Probe: EX3DV4 - SN3550; ConvF(8.3, 8.3, 8.3); Calibrated: 1/26/2010
Sensor-Surface: 4mm (Mechanical Surface Detection)
Electronics: DAE4 Sn649; Calibrated: 1/22/2010
Phantom: SAM Main; Type: SAM 4.0; Serial: TP-1114
Measurement SW: DASY4, V4.7 Build 80; Postprocessing SW: SEMCAD, V1.8 Build 186

Mode: GPRS 850, Body SAR, Back side, Mid.ch, 2 Tx Slots, Back-off Active

Area Scan (7x12x1): Measurement grid: dx=15mm, dy=15mm
Zoom Scan (5x5x7)/Cube 0: Measurement grid: dx=8mm, dy=8mm, dz=5mm
Reference Value = 22.9 V/m
Peak SAR (extrapolated) = 0.628 W/kg
SAR(1 g) = 0.504 mW/g; SAR(10 g) = 0.380 mW/g

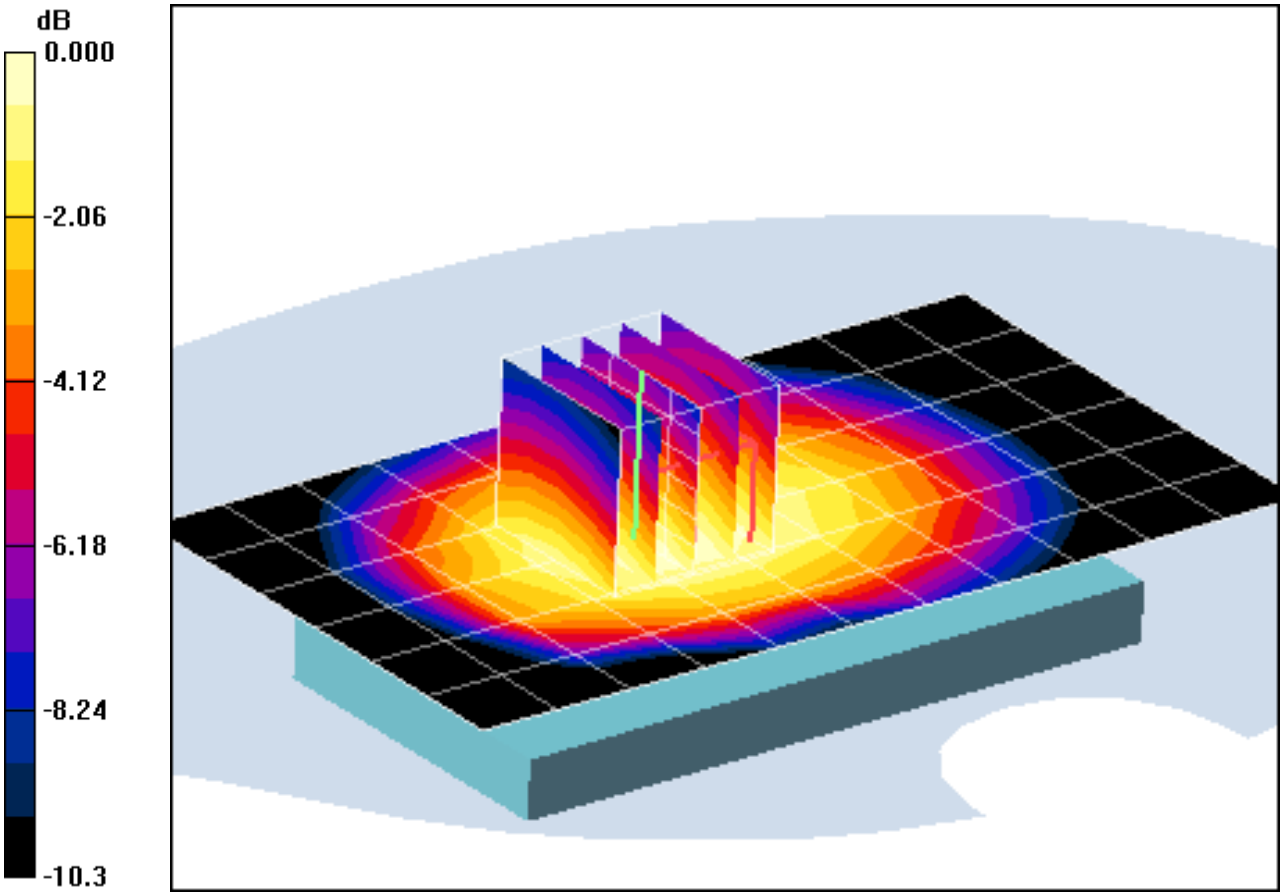

0 dB = 0.529mW/g

PCTEST ENGINEERING LABORATORY, INC.

DUT: BEJP999DW; Type: 850/1900 GSM/GPRS/EDGE and AWS WCDMA/HSPA Phone with Bluetooth and WLAN; Serial: 011KPAE000480

Communication System: GSM850 GPRS; 2 Tx slots; Frequency: 836.6 MHz;Duty Cycle: 1:4.15
Medium: 835 Body Medium parameters used (interpolated):
f = 836.6 MHz; σ = 0.994 mho/m; ε_r = 55.3; ρ = 1000 kg/m^3
Phantom section: Flat Section; Space: 1.0 cm

Test Date: 12-20-2010; Ambient Temp: 23.8°C; Tissue Temp: 21.9°C

Probe: EX3DV4 - SN3550; ConvF(8.3, 8.3, 8.3); Calibrated: 1/26/2010
Sensor-Surface: 4mm (Mechanical Surface Detection)
Electronics: DAE4 Sn649; Calibrated: 1/22/2010
Phantom: SAM Main; Type: SAM 4.0; Serial: TP-1114
Measurement SW: DASY4, V4.7 Build 80; Postprocessing SW: SEMCAD, V1.8 Build 186

Mode: GPRS 850, Body SAR, Back side, Mid.ch, 2 Tx Slots, Back-off Active

Area Scan (7x12x1): Measurement grid: dx=15mm, dy=15mm
Zoom Scan (5x5x7)/Cube 0: Measurement grid: dx=8mm, dy=8mm, dz=5mm
Reference Value = 22.9 V/m
Peak SAR (extrapolated) = 0.628 W/kg
SAR(1 g) = 0.504 mW/g; SAR(10 g) = 0.380 mW/g

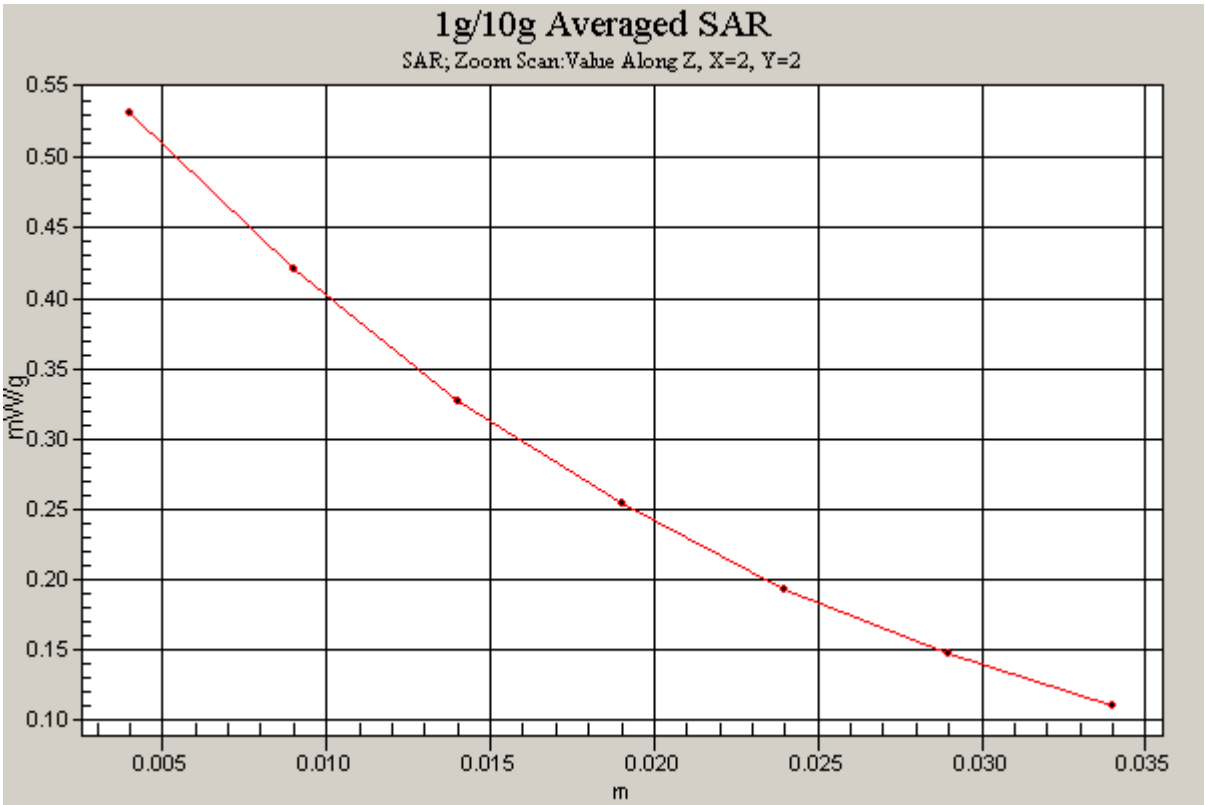

PCTEST ENGINEERING LABORATORY, INC.

DUT: BEJP999DW; Type: 850/1900 GSM/GPRS/EDGE and AWS WCDMA/HSPA Phone with Bluetooth and WLAN; Serial: 011KPAE000480

Communication System: GSM850 GPRS; 2 Tx slots; Frequency: 836.6 MHz;Duty Cycle: 1:4.15
Medium: 835 Body Medium parameters used (interpolated):
f = 836.6 MHz; σ = 0.994 mho/m; ε_r = 55.3; ρ = 1000 kg/m^3
Phantom section: Flat Section; Space: 1.0 cm

Test Date: 12-20-2010; Ambient Temp: 23.8°C; Tissue Temp: 21.9°C

Probe: EX3DV4 - SN3550; ConvF(8.3, 8.3, 8.3); Calibrated: 1/26/2010
Sensor-Surface: 4mm (Mechanical Surface Detection)
Electronics: DAE4 Sn649; Calibrated: 1/22/2010
Phantom: SAM Main; Type: SAM 4.0; Serial: TP-1114
Measurement SW: DASY4, V4.7 Build 80; Postprocessing SW: SEMCAD, V1.8 Build 186

Mode: GPRS 850, Body SAR, Front side, Mid.ch, 2 Tx Slots, Back-off Active

Area Scan (7x12x1): Measurement grid: dx=15mm, dy=15mm
Zoom Scan (5x5x7)/Cube 0: Measurement grid: dx=8mm, dy=8mm, dz=5mm
Reference Value = 15.2 V/m
Peak SAR (extrapolated) = 0.277 W/kg
SAR(1 g) = 0.221 mW/g; SAR(10 g) = 0.168 mW/g

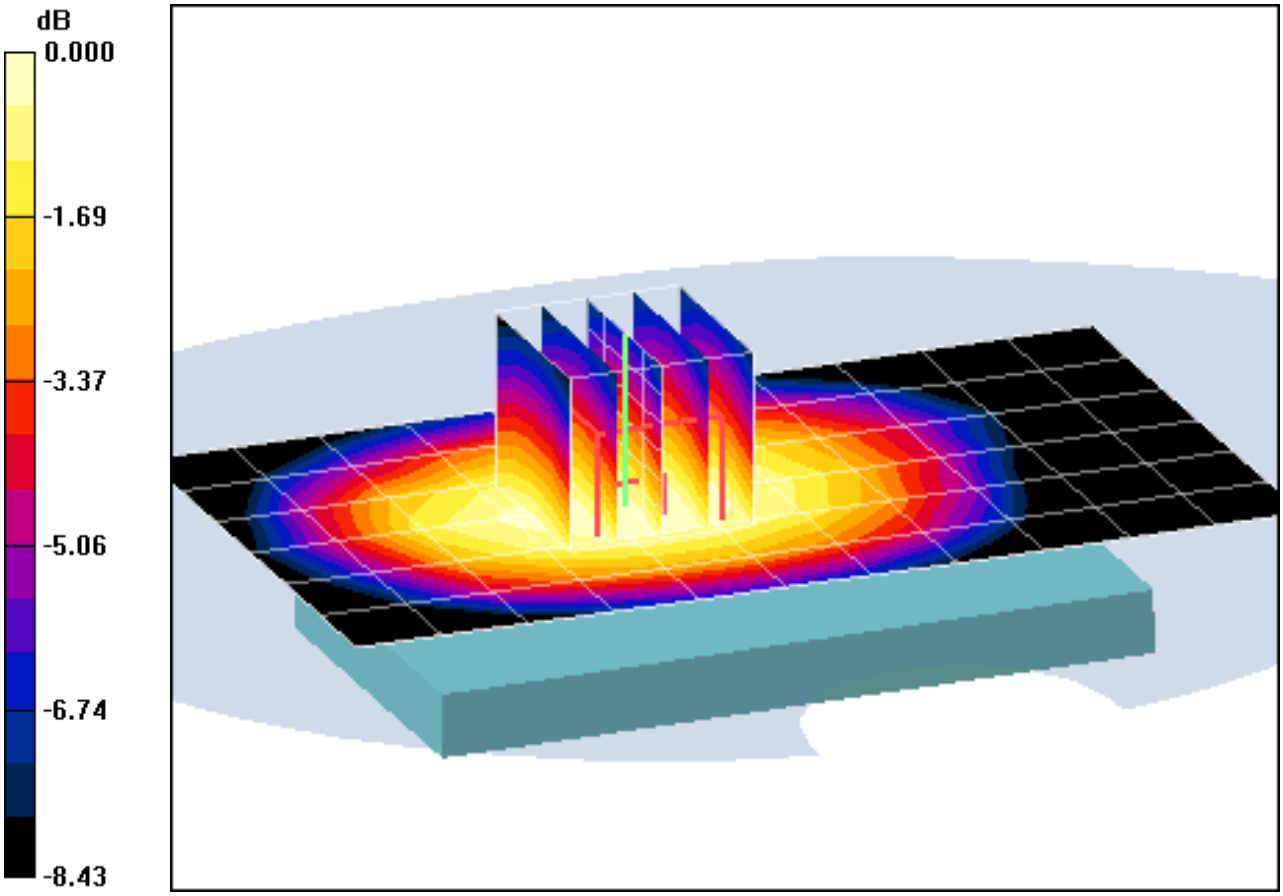

0 dB = 0.232mW/g

PCTEST ENGINEERING LABORATORY, INC.

DUT: BEJP999DW; Type: 850/1900 GSM/GPRS/EDGE and AWS WCDMA/HSPA Phone with Bluetooth and WLAN; Serial: 011KPAE000480

Communication System: GSM850 GPRS; 2 Tx slots; Frequency: 836.6 MHz;Duty Cycle: 1:4.15
Medium: 835 Body Medium parameters used (interpolated):
f = 836.6 MHz; σ = 0.994 mho/m; ε_r = 55.3; ρ = 1000 kg/m^3
Phantom section: Flat Section; Space: 1.0 cm

Test Date: 12-20-2010; Ambient Temp: 23.8°C; Tissue Temp: 21.9°C

Probe: EX3DV4 - SN3550; ConvF(8.3, 8.3, 8.3); Calibrated: 1/26/2010
Sensor-Surface: 4mm (Mechanical Surface Detection)
Electronics: DAE4 Sn649; Calibrated: 1/22/2010
Phantom: SAM Main; Type: SAM 4.0; Serial: TP-1114
Measurement SW: DASY4, V4.7 Build 80; Postprocessing SW: SEMCAD, V1.8 Build 186

Mode: GPRS 850, Body SAR, Right side, Mid.ch, 2 Tx Slots, Back-off Active

Area Scan (5x12x1): Measurement grid: dx=15mm, dy=15mm
Zoom Scan (5x5x7)/Cube 0: Measurement grid: dx=8mm, dy=8mm, dz=5mm
Reference Value = 20.0 V/m
Peak SAR (extrapolated) = 0.543 W/kg
SAR(1 g) = 0.387 mW/g; SAR(10 g) = 0.268 mW/g

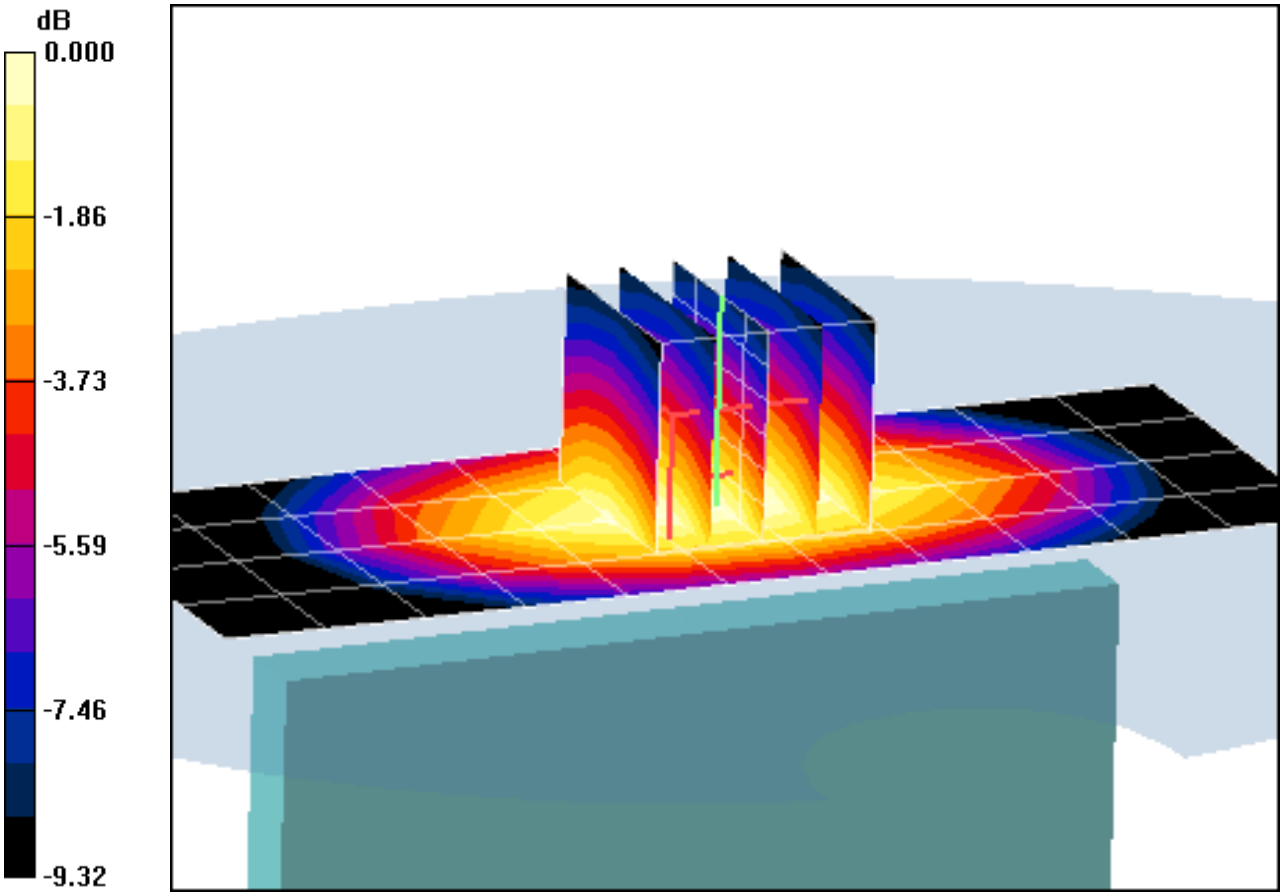

0 dB = 0.410mW/g

PCTEST ENGINEERING LABORATORY, INC.

DUT: BEJP999DW; Type: 850/1900 GSM/GPRS/EDGE and AWS WCDMA/HSPA Phone with Bluetooth and WLAN; Serial: 011KPAE000480

Communication System: GSM850 GPRS; 2 Tx slots; Frequency: 836.6 MHz;Duty Cycle: 1:4.15
Medium: 835 Body Medium parameters used (interpolated):
f = 836.6 MHz; σ = 0.994 mho/m; ε_r = 55.3; ρ = 1000 kg/m^3
Phantom section: Flat Section; Space: 1.0 cm

Test Date: 12-20-2010; Ambient Temp: 23.8°C; Tissue Temp: 21.9°C

Probe: EX3DV4 - SN3550; ConvF(8.3, 8.3, 8.3); Calibrated: 1/26/2010
Sensor-Surface: 4mm (Mechanical Surface Detection)
Electronics: DAE4 Sn649; Calibrated: 1/22/2010
Phantom: SAM Main; Type: SAM 4.0; Serial: TP-1114
Measurement SW: DASY4, V4.7 Build 80; Postprocessing SW: SEMCAD, V1.8 Build 186

Mode: GPRS 850, Body SAR, Left side, Mid.ch, 2 Tx Slots, Back-off Active

Area Scan (5x12x1): Measurement grid: dx=15mm, dy=15mm
Zoom Scan (5x5x7)/Cube 0: Measurement grid: dx=8mm, dy=8mm, dz=5mm
Reference Value = 18.6 V/m
Peak SAR (extrapolated) = 0.467 W/kg
SAR(1 g) = 0.331 mW/g; SAR(10 g) = 0.228 mW/g

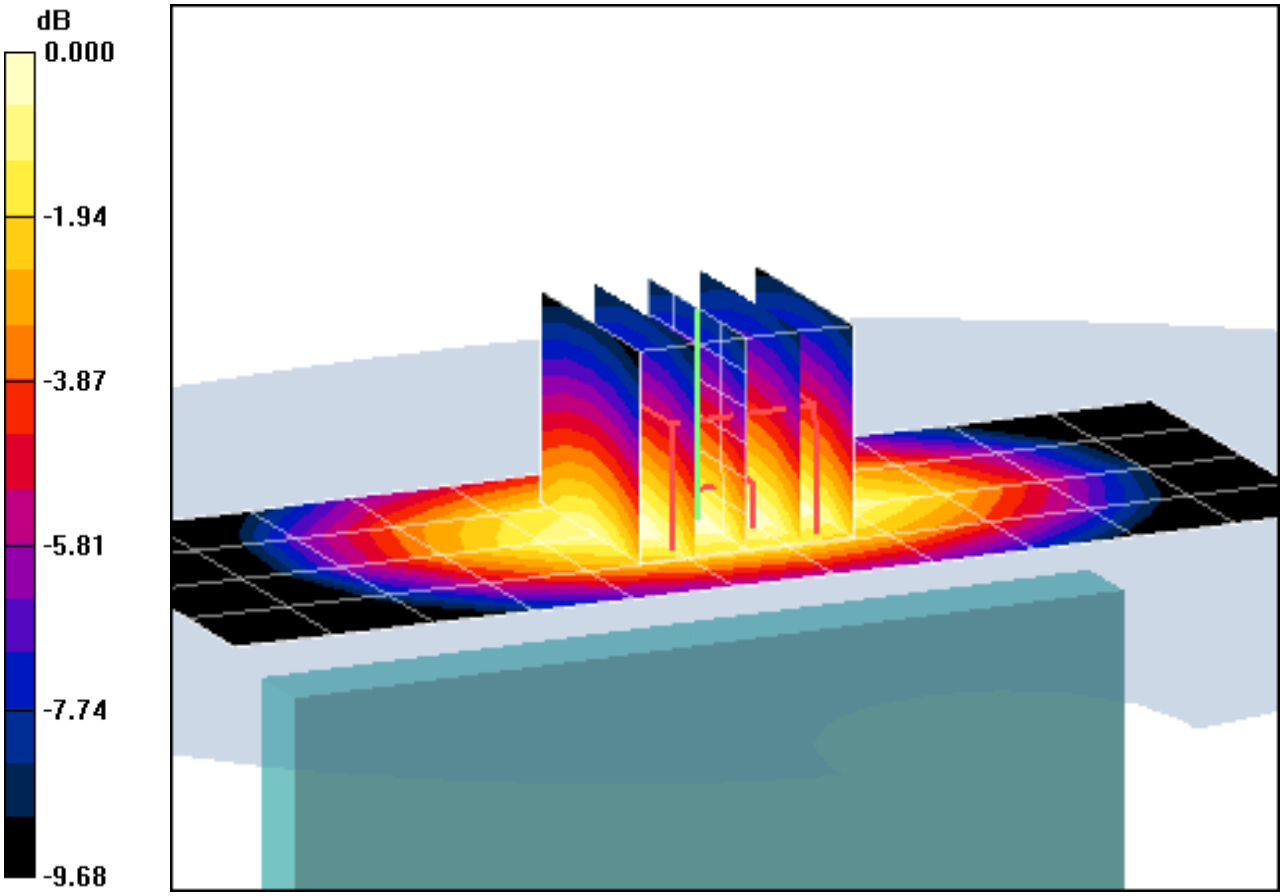

0 dB = 0.354mW/g

PCTEST ENGINEERING LABORATORY, INC.

DUT: BEJP999DW; Type: 850/1900 GSM/GPRS/EDGE and AWS WCDMA/HSPA Phone with Bluetooth and WLAN; Serial: 011KPAE000480

Communication System: GSM850 GPRS; 2 Tx slots; Frequency: 836.6 MHz;Duty Cycle: 1:4.15
Medium: 835 Body Medium parameters used (interpolated):
f = 836.6 MHz; σ = 0.994 mho/m; ε_r = 55.3; ρ = 1000 kg/m^3
Phantom section: Flat Section; Space: 1.0 cm

Test Date: 12-20-2010; Ambient Temp: 23.8°C; Tissue Temp: 21.9°C

Probe: EX3DV4 - SN3550; ConvF(8.3, 8.3, 8.3); Calibrated: 1/26/2010
Sensor-Surface: 4mm (Mechanical Surface Detection)
Electronics: DAE4 Sn649; Calibrated: 1/22/2010
Phantom: SAM Main; Type: SAM 4.0; Serial: TP-1114
Measurement SW: DASY4, V4.7 Build 80; Postprocessing SW: SEMCAD, V1.8 Build 186

Mode: GPRS 850, Body SAR, Bottom side, Mid.ch, 2 Tx Slots, Back-off Active

Area Scan (5x7x1): Measurement grid: dx=15mm, dy=15mm
Zoom Scan (5x5x7)/Cube 0: Measurement grid: dx=8mm, dy=8mm, dz=5mm
Reference Value = 4.89 V/m
Peak SAR (extrapolated) = 0.061 W/kg
SAR(1 g) = 0.034 mW/g; SAR(10 g) = 0.020 mW/g

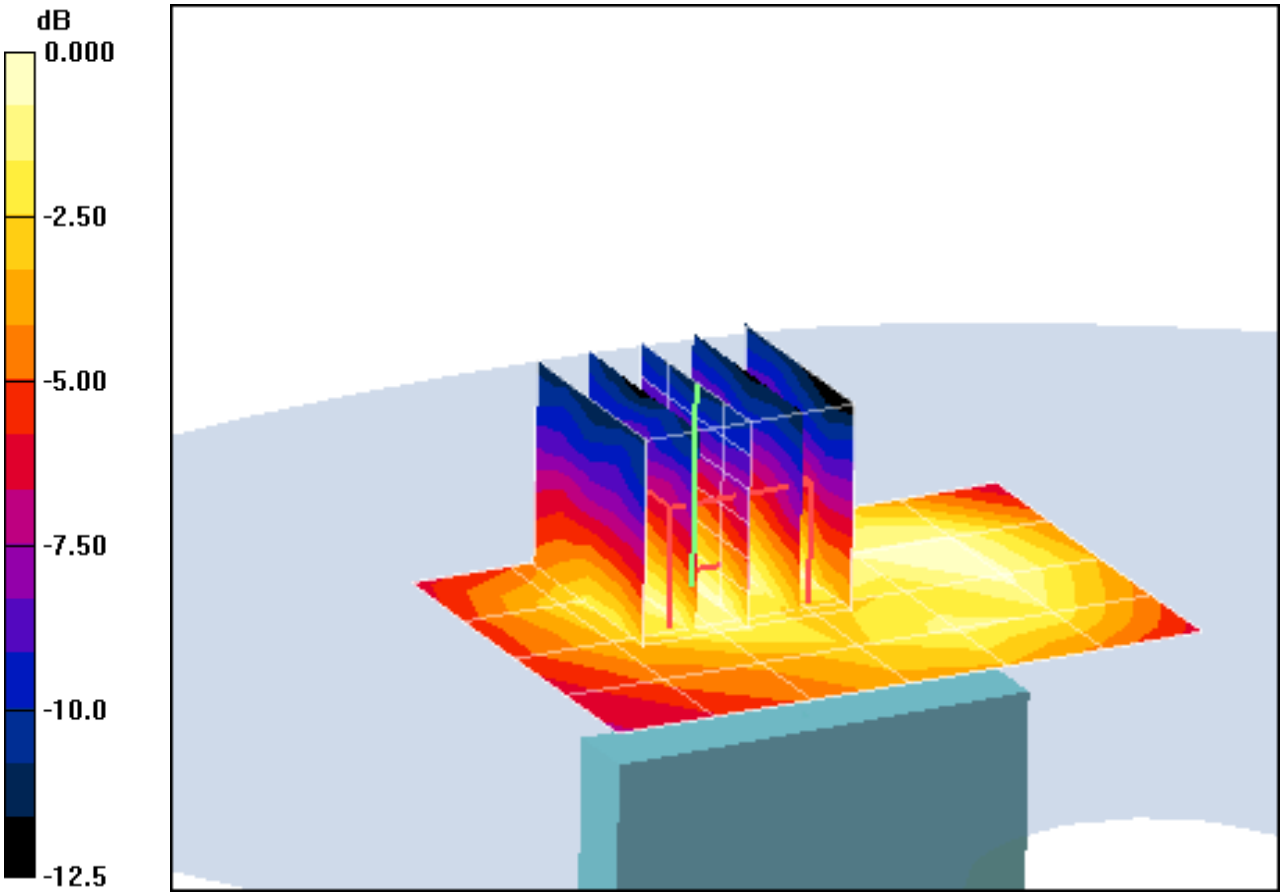

0 dB = 0.036mW/g

PCTEST ENGINEERING LABORATORY, INC.

DUT: BEJP999DW; Type: 850/1900 GSM/GPRS/EDGE and AWS WCDMA/HSPA Phone with Bluetooth and WLAN; Serial: 011KPAE000480

Communication System: GSM1900 GPRS; 2 Tx slots; Frequency: 1880 MHz;Duty Cycle: 1:4.15
Medium: 1900 Body Medium parameters used:
f = 1880 MHz; σ = 1.51 mho/m; ε_r = 53.5; ρ = 1000 kg/m^3
Phantom section: Flat Section; Space: 1.0 cm

Test Date: 12-21-2010; Ambient Temp: 23.2°C; Tissue Temp: 21.6°C

Probe: EX3DV4 - SN3550; ConvF(6.63, 6.63, 6.63); Calibrated: 1/26/2010
Sensor-Surface: 4mm (Mechanical Surface Detection)
Electronics: DAE4 Sn649; Calibrated: 1/22/2010
Phantom: SAM Sub; Type: SAM 4.0; Serial: TP-1357
Measurement SW: DASY4, V4.7 Build 80; Postprocessing SW: SEMCAD, V1.8 Build 186

Mode: GPRS 1900, Body SAR, Back side, Mid.ch, 2 Tx Slots, Back-off Active

Area Scan (7x11x1): Measurement grid: dx=15mm, dy=15mm
Zoom Scan (5x5x7)/Cube 0: Measurement grid: dx=8mm, dy=8mm, dz=5mm
Reference Value = 15.9 V/m
Peak SAR (extrapolated) = 0.612 W/kg
SAR(1 g) = 0.334 mW/g; SAR(10 g) = 0.168 mW/g

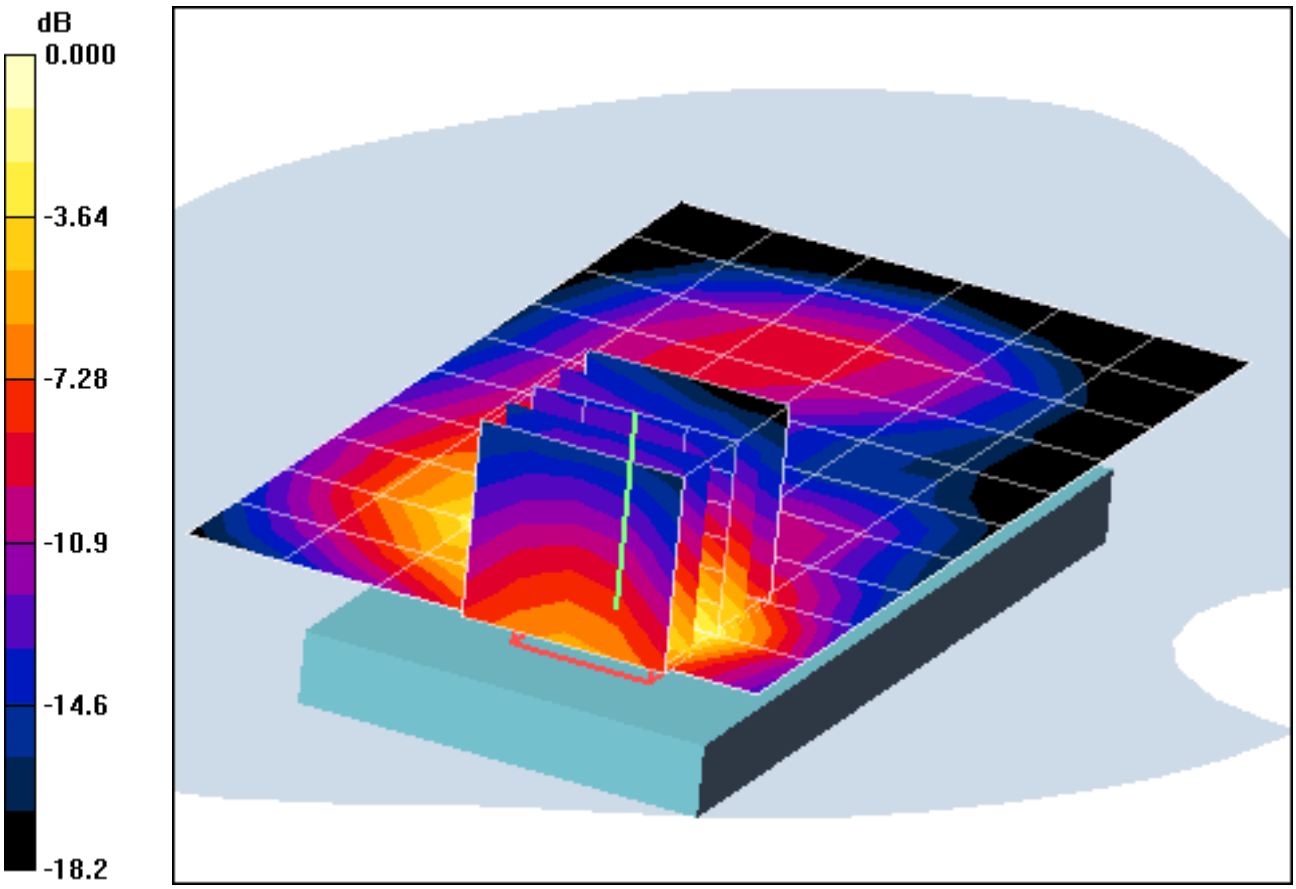

0 dB = 0.370mW/g

PCTEST ENGINEERING LABORATORY, INC.

DUT: BEJP999DW; Type: 850/1900 GSM/GPRS/EDGE and AWS WCDMA/HSPA Phone with Bluetooth and WLAN; Serial: 011KPAE000480

Communication System: GSM1900 GPRS; 2 Tx slots; Frequency: 1880 MHz;Duty Cycle: 1:4.15
Medium: 1900 Body Medium parameters used:
f = 1880 MHz; σ = 1.51 mho/m; ε_r = 53.5; ρ = 1000 kg/m^3
Phantom section: Flat Section; Space: 1.0 cm

Test Date: 12-21-2010; Ambient Temp: 23.2° C;Tissue Temp: 21.6° C

Probe: EX3DV4 - SN3550; ConvF(6.63, 6.63, 6.63); Calibrated: 1/26/2010
Sensor-Surface: 4mm (Mechanical Surface Detection)
Electronics: DAE4 Sn649; Calibrated: 1/22/2010
Phantom: SAM Sub; Type: SAM 4.0; Serial: TP-1357
Measurement SW: DASY4, V4.7 Build 80; Postprocessing SW: SEMCAD, V1.8 Build 186

Mode: GPRS 1900, Body SAR, Back side, Mid.ch, 2 Tx Slots, Back-off Active

Area Scan (7x11x1): Measurement grid: dx=15mm, dy=15mm
Zoom Scan (5x5x7)/Cube 0: Measurement grid: dx=8mm, dy=8mm, dz=5mm
Reference Value = 15.9 V/m
Peak SAR (extrapolated) = 0.612 W/kg
SAR(1 g) = 0.334 mW/g; SAR(10 g) = 0.168 mW/g

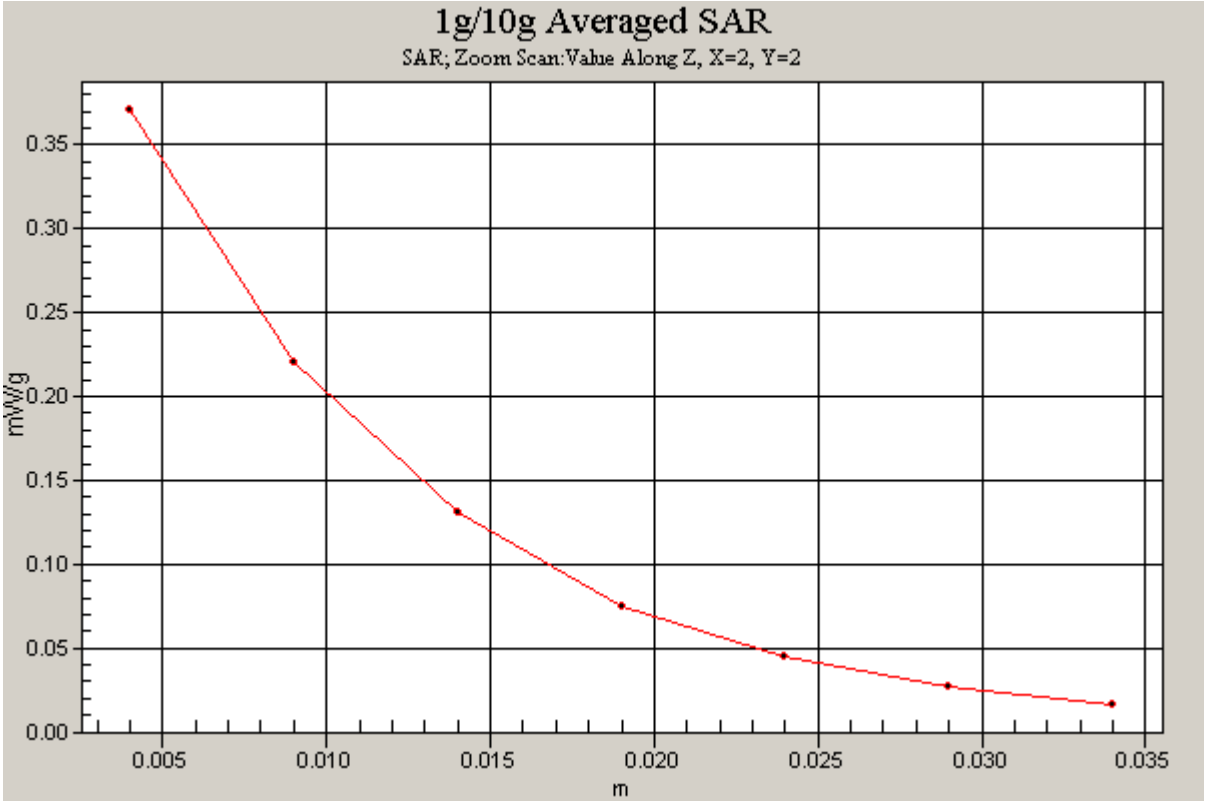

PCTEST ENGINEERING LABORATORY, INC.

DUT: BEJP999DW; Type: 850/1900 GSM/GPRS/EDGE and AWS WCDMA/HSPA Phone with Bluetooth and WLAN; Serial: 011KPAE000480

Communication System: GSM1900 GPRS; 2 Tx slots; Frequency: 1880 MHz;Duty Cycle: 1:4.15
Medium: 1900 Body Medium parameters used:
f = 1880 MHz; σ = 1.51 mho/m; ε_r = 53.5; ρ = 1000 kg/m^3
Phantom section: Flat Section; Space: 1.0 cm

Test Date: 12-21-2010; Ambient Temp: 23.2°C; Tissue Temp: 21.6°C

Probe: EX3DV4 - SN3550; ConvF(6.63, 6.63, 6.63); Calibrated: 1/26/2010
Sensor-Surface: 4mm (Mechanical Surface Detection)
Electronics: DAE4 Sn649; Calibrated: 1/22/2010
Phantom: SAM Sub; Type: SAM 4.0; Serial: TP-1357
Measurement SW: DASY4, V4.7 Build 80; Postprocessing SW: SEMCAD, V1.8 Build 186

Mode: GPRS 1900, Body SAR, Front side, Mid.ch, 2 Tx Slots, Back-off Active

Area Scan (7x11x1): Measurement grid: dx=15mm, dy=15mm
Zoom Scan (5x5x7)/Cube 0: Measurement grid: dx=8mm, dy=8mm, dz=5mm
Reference Value = 11.8 V/m
Peak SAR (extrapolated) = 0.370 W/kg
SAR(1 g) = 0.207 mW/g; SAR(10 g) = 0.116 mW/g

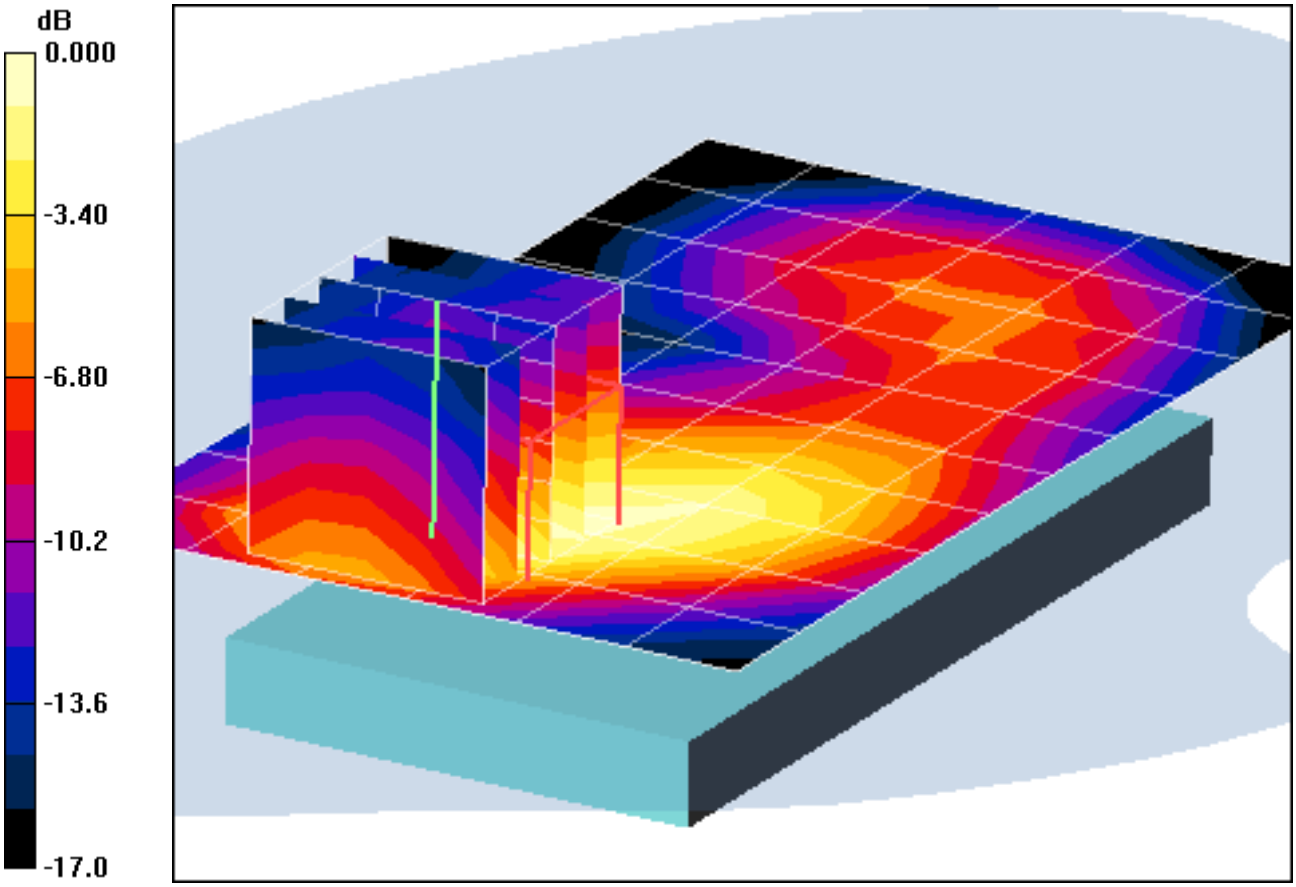

0 dB = 0.233mW/g

PCTEST ENGINEERING LABORATORY, INC.

DUT: BEJP999DW; Type: 850/1900 GSM/GPRS/EDGE and AWS WCDMA/HSPA Phone with Bluetooth and WLAN; Serial: 011KPAE000480

Communication System: GSM1900 GPRS; 2 Tx slots; Frequency: 1880 MHz;Duty Cycle: 1:4.15
Medium: 1900 Body Medium parameters used:
f = 1880 MHz; σ = 1.51 mho/m; ε_r = 53.5; ρ = 1000 kg/m^3
Phantom section: Flat Section; Space: 1.0 cm

Test Date: 12-21-2010; Ambient Temp: 23.2°C; Tissue Temp: 21.6°C

Probe: EX3DV4 - SN3550; ConvF(6.63, 6.63, 6.63); Calibrated: 1/26/2010
Sensor-Surface: 4mm (Mechanical Surface Detection)
Electronics: DAE4 Sn649; Calibrated: 1/22/2010
Phantom: SAM Sub; Type: SAM 4.0; Serial: TP-1357
Measurement SW: DASY4, V4.7 Build 80; Postprocessing SW: SEMCAD, V1.8 Build 186

Mode: GPRS 1900, Body SAR, Right side, Mid.ch, 2 Tx Slots, Back-off Active

Area Scan (5x12x1): Measurement grid: dx=15mm, dy=15mm
Zoom Scan (5x5x7)/Cube 0: Measurement grid: dx=8mm, dy=8mm, dz=5mm
Reference Value = 5.42 V/m
Peak SAR (extrapolated) = 0.073 W/kg
SAR(1 g) = 0.047 mW/g; SAR(10 g) = 0.030 mW/g

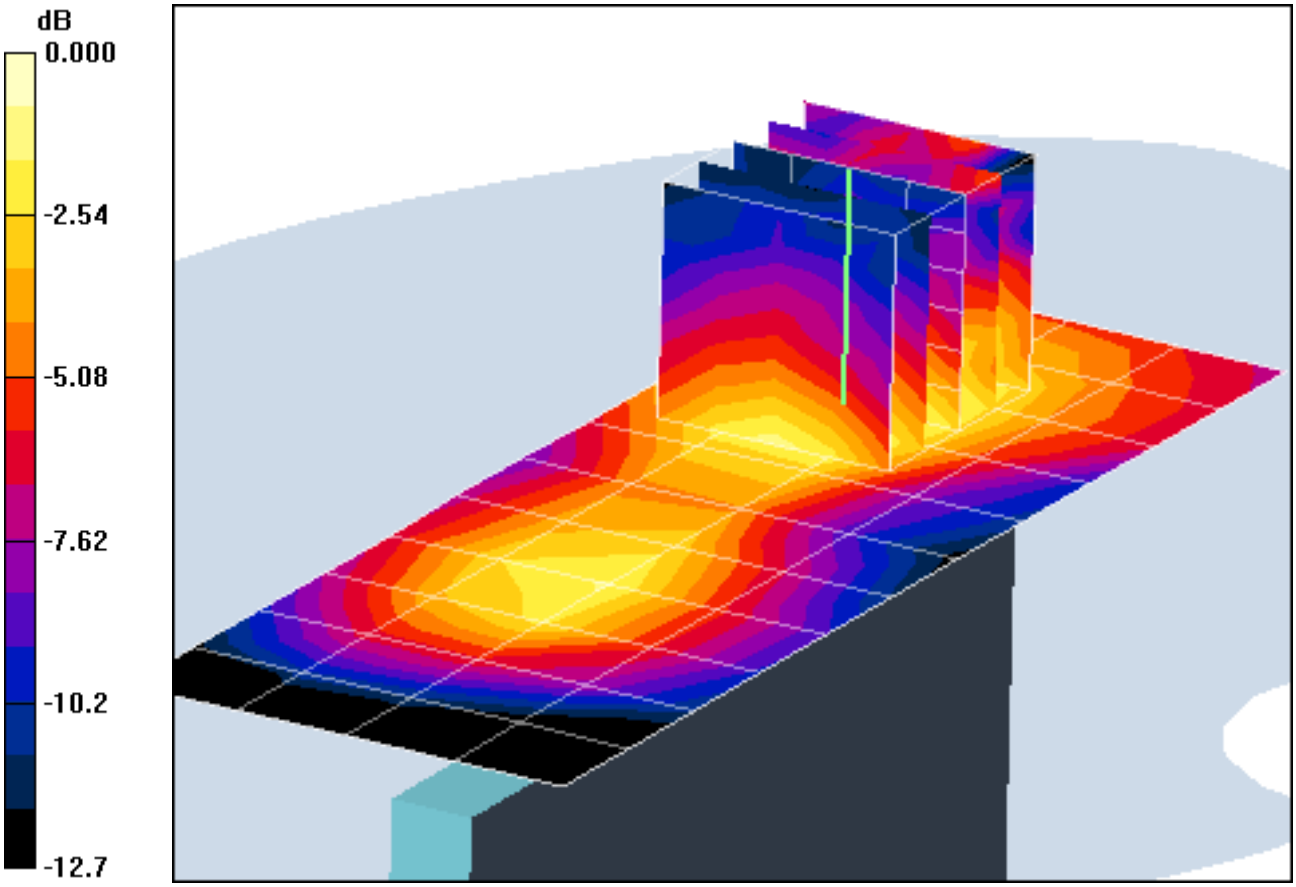

0 dB = 0.052mW/g

PCTEST ENGINEERING LABORATORY, INC.

DUT: BEJP999DW; Type: 850/1900 GSM/GPRS/EDGE and AWS WCDMA/HSPA Phone with Bluetooth and WLAN; Serial: 011KPAE000480

Communication System: GSM1900 GPRS; 2 Tx slots; Frequency: 1880 MHz;Duty Cycle: 1:4.15
Medium: 1900 Body Medium parameters used:
f = 1880 MHz; σ = 1.51 mho/m; ε_r = 53.5; ρ = 1000 kg/m^3
Phantom section: Flat Section; Space: 1.0 cm

Test Date: 12-21-2010; Ambient Temp: 23.2°C; Tissue Temp: 21.6°C

Probe: EX3DV4 - SN3550; ConvF(6.63, 6.63, 6.63); Calibrated: 1/26/2010
Sensor-Surface: 4mm (Mechanical Surface Detection)
Electronics: DAE4 Sn649; Calibrated: 1/22/2010
Phantom: SAM Sub; Type: SAM 4.0; Serial: TP-1357
Measurement SW: DASY4, V4.7 Build 80; Postprocessing SW: SEMCAD, V1.8 Build 186

Mode: GPRS 1900, Body SAR, Left side, Mid.ch, 2 Tx Slots, Back-off Active

Area Scan (5x12x1): Measurement grid: dx=15mm, dy=15mm
Zoom Scan (5x5x7)/Cube 0: Measurement grid: dx=8mm, dy=8mm, dz=5mm
Reference Value = 3.37 V/m
Peak SAR (extrapolated) = 0.078 W/kg
SAR(1 g) = 0.017 mW/g; SAR(10 g) = 0.00412 mW/g

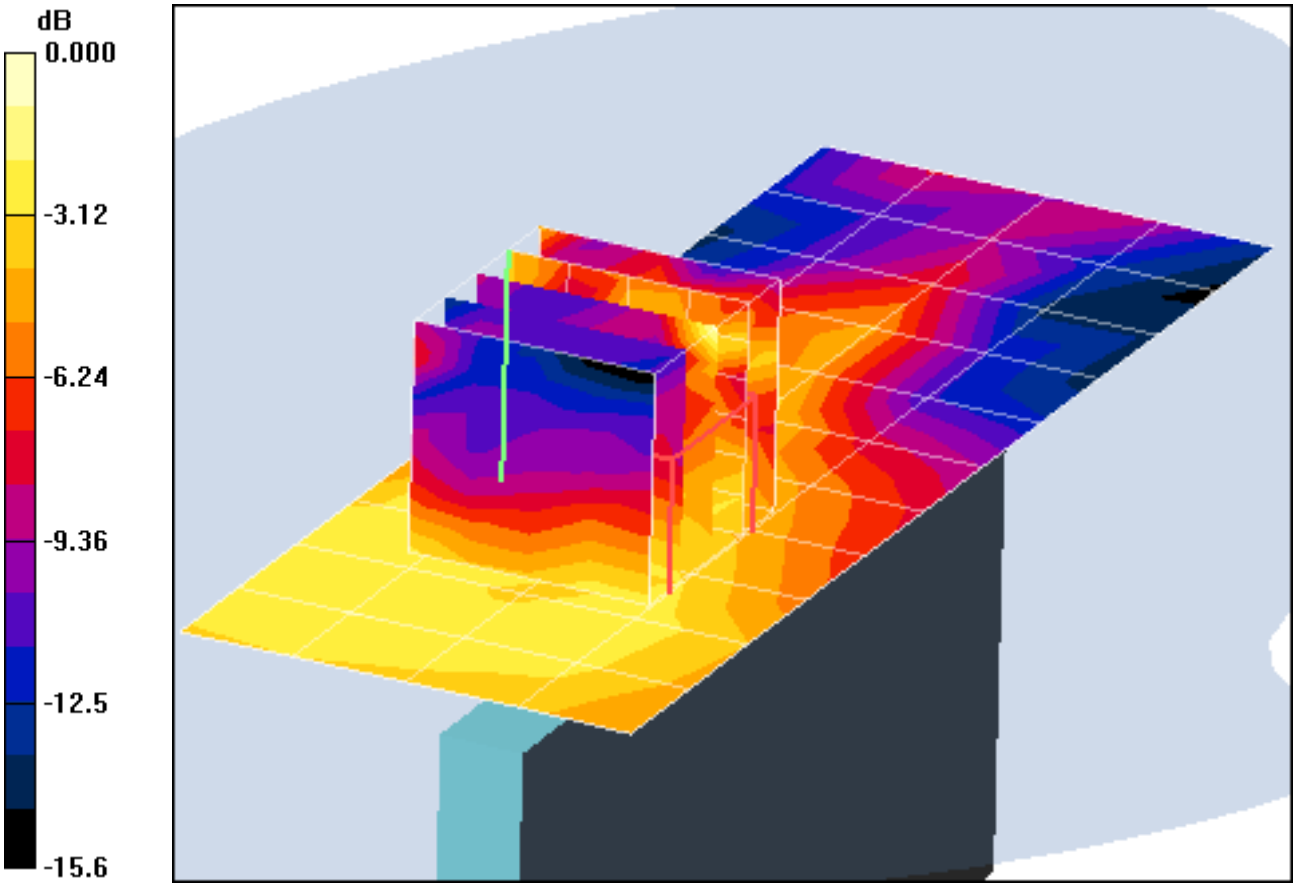

0 dB = 0.026mW/g

PCTEST ENGINEERING LABORATORY, INC.

DUT: BEJP999DW; Type: 850/1900 GSM/GPRS/EDGE and AWS WCDMA/HSPA Phone with Bluetooth and WLAN; Serial: 011KPAE000480

Communication System: GSM1900 GPRS; 2 Tx slots; Frequency: 1880 MHz;Duty Cycle: 1:4.15
Medium: 1900 Body Medium parameters used:
f = 1880 MHz; σ = 1.51 mho/m; ε_r = 53.5; ρ = 1000 kg/m^3
Phantom section: Flat Section; Space: 1.0 cm

Test Date: 12-21-2010; Ambient Temp: 23.2°C; Tissue Temp: 21.6°C

Probe: EX3DV4 - SN3550; ConvF(6.63, 6.63, 6.63); Calibrated: 1/26/2010
Sensor-Surface: 4mm (Mechanical Surface Detection)
Electronics: DAE4 Sn649; Calibrated: 1/22/2010
Phantom: SAM Sub; Type: SAM 4.0; Serial: TP-1357
Measurement SW: DASY4, V4.7 Build 80; Postprocessing SW: SEMCAD, V1.8 Build 186

Mode: GPRS 1900, Body SAR, Bottom side, Mid.ch, 2 Tx Slots, Back-off Active

Area Scan (5x7x1): Measurement grid: dx=15mm, dy=15mm
Zoom Scan (5x5x7)/Cube 0: Measurement grid: dx=8mm, dy=8mm, dz=5mm
Reference Value = 13.2 V/m
Peak SAR (extrapolated) = 0.425 W/kg
SAR(1 g) = 0.246 mW/g; SAR(10 g) = 0.129 mW/g

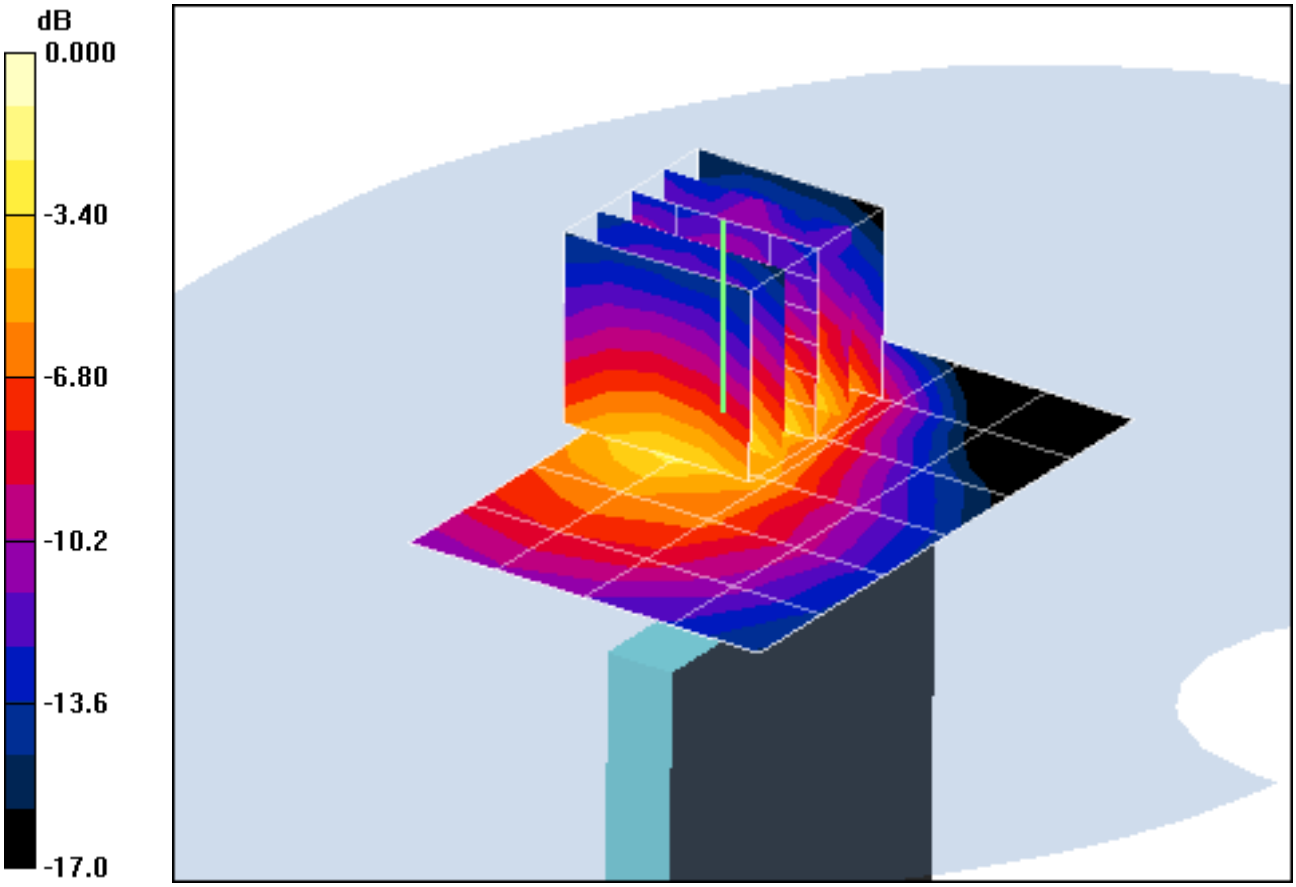

0 dB = 0.276mW/g

PCTEST ENGINEERING LABORATORY, INC.

DUT: BEJP999DW; Type: 850/1900 GSM/GPRS/EDGE and AWS WCDMA/HSPA Phone with Bluetooth and WLAN; Serial: 011KPAE000480

Communication System: WCDMA1700; Frequency: 1730.4 MHz;Duty Cycle: 1:1
Medium: 1750 Body Medium parameters used (interpolated):
f = 1730.4 MHz; σ = 1.52 mho/m; ε_r = 53.04; ρ = 1000 kg/m^3
Phantom section: Flat Section; Space: 1.0 cm

Test Date: 12-22-2010; Ambient Temp: 24.1 °C; Tissue Temp: 22.2 °C

Probe: ES3DV3 - SN3213; ConvF(4.8, 4.8, 4.8); Calibrated: 3/16/2010
Sensor-Surface: 4mm (Mechanical Surface Detection)
Electronics: DAE4 Sn704; Calibrated: 3/22/2010
Phantom: SAM Main; Type: SAM 4.0; Serial: TP-1406
Measurement SW: DASY4, V4.7 Build 80; Postprocessing SW: SEMCAD, V1.8 Build 186

Mode: WCDMA 1700, Body SAR, Back side, Mid.ch, **Back-off Active**

Area Scan (7x10x1): Measurement grid: dx=15mm, dy=15mm
Zoom Scan (5x5x7)/Cube 0: Measurement grid: dx=8mm, dy=8mm, dz=5mm
Reference Value = 18.8 V/m
Peak SAR (extrapolated) = 0.848 W/kg
SAR(1 g) = 0.524 mW/g; SAR(10 g) = 0.308 mW/g

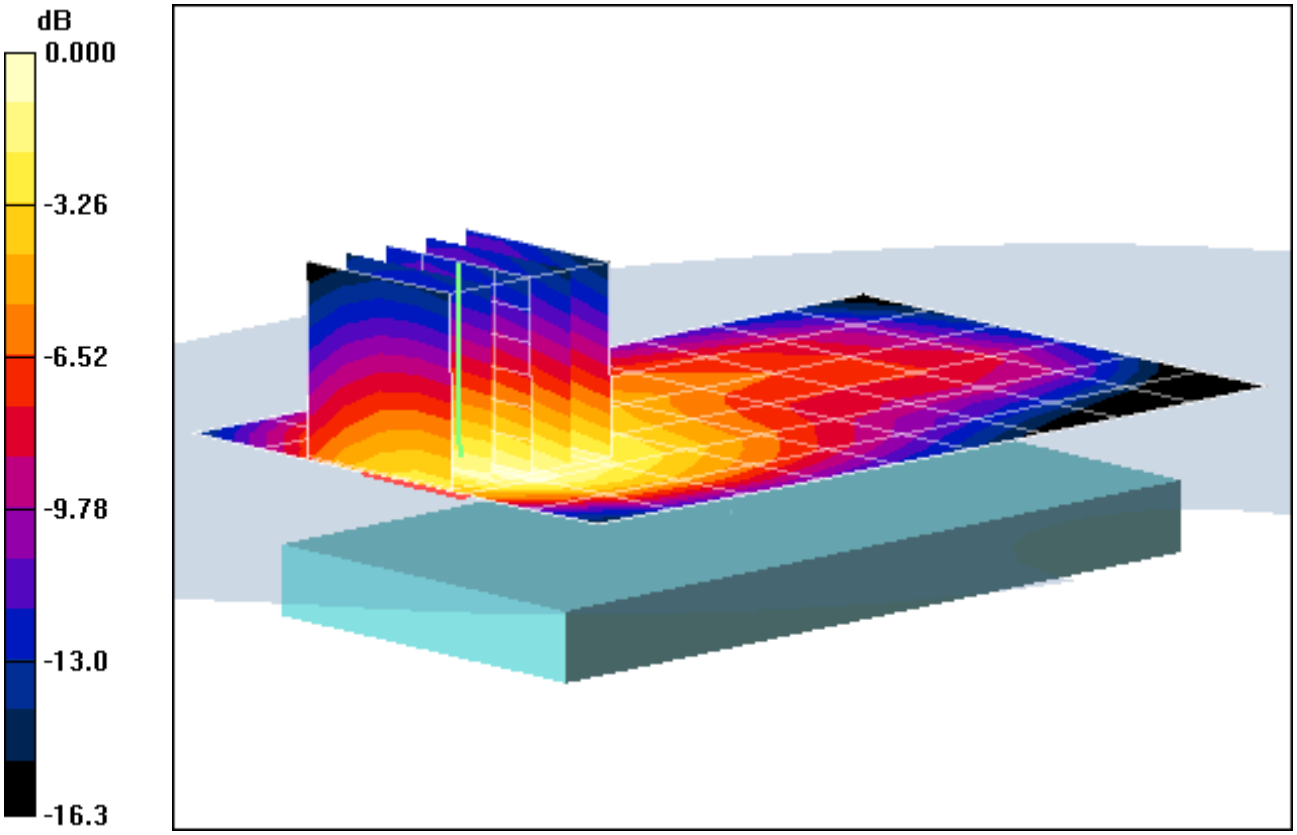

0 dB = 0.561mW/g

PCTEST ENGINEERING LABORATORY, INC.

DUT: BEJP999DW; Type: 850/1900 GSM/GPRS/EDGE and AWS WCDMA/HSPA Phone with Bluetooth and WLAN; Serial: 011KPAE000480

Communication System: WCDMA1700; Frequency: 1730.4 MHz;Duty Cycle: 1:1
Medium: 1750 Body Medium parameters used (interpolated):
f = 1730.4 MHz; σ = 1.52 mho/m; ε_r = 53.04; ρ = 1000 kg/m^3
Phantom section: Flat Section; Space: 1.0 cm

Test Date: 12-22-2010; Ambient Temp: 24.1 °C; Tissue Temp: 22.2 °C

Probe: ES3DV3 - SN3213; ConvF(4.8, 4.8, 4.8); Calibrated: 3/16/2010
Sensor-Surface: 4mm (Mechanical Surface Detection)
Electronics: DAE4 Sn704; Calibrated: 3/22/2010
Phantom: SAM Main; Type: SAM 4.0; Serial: TP-1406
Measurement SW: DASY4, V4.7 Build 80; Postprocessing SW: SEMCAD, V1.8 Build 186

Mode: WCDMA 1700, Body SAR, Front side, Mid.ch, Back-off Active

Area Scan (7x10x1): Measurement grid: dx=15mm, dy=15mm
Zoom Scan (5x5x7)/Cube 0: Measurement grid: dx=8mm, dy=8mm, dz=5mm
Reference Value = 18.3 V/m
Peak SAR (extrapolated) = 0.759 W/kg
SAR(1 g) = 0.482 mW/g; SAR(10 g) = 0.287 mW/g

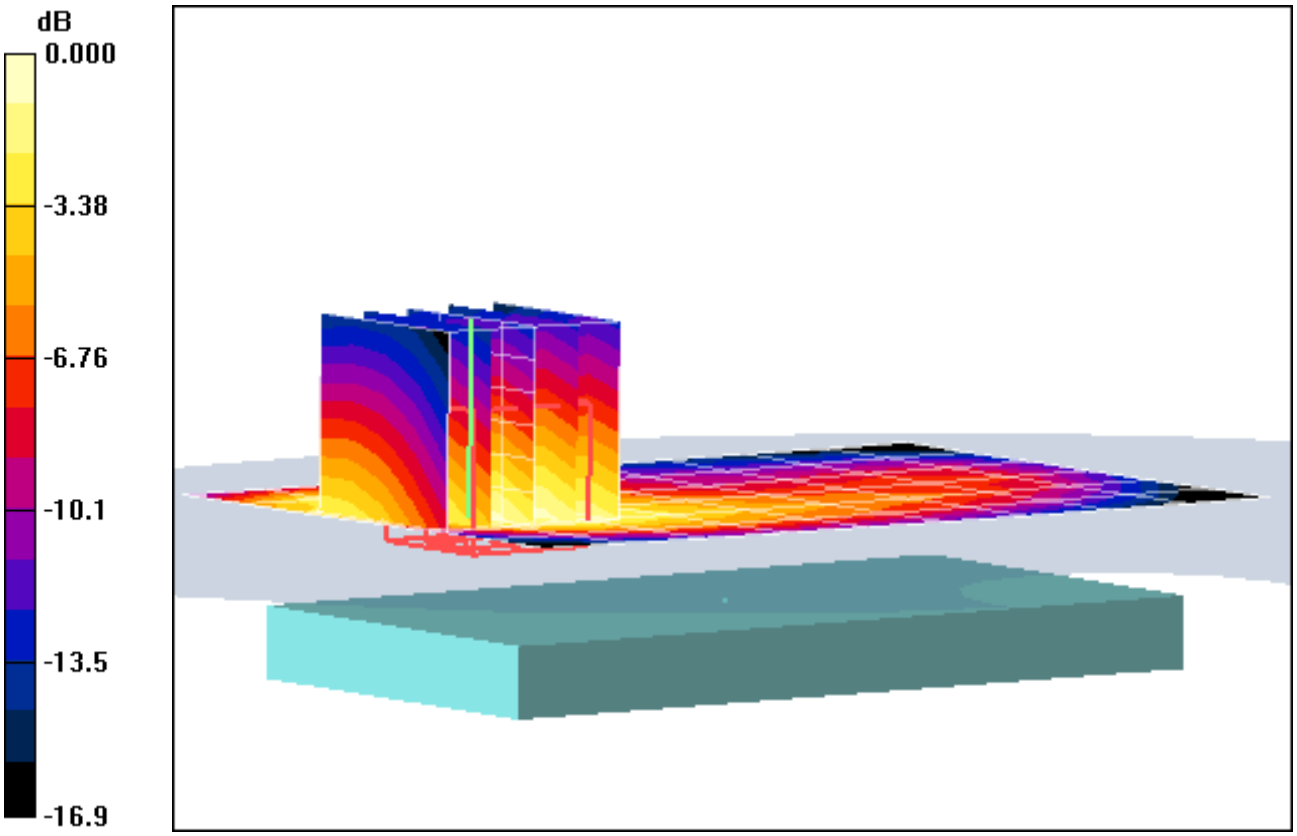

0 dB = 0.537mW/g

PCTEST ENGINEERING LABORATORY, INC.

DUT: BEJP999DW; Type: 850/1900 GSM/GPRS/EDGE and AWS WCDMA/HSPA Phone with Bluetooth and WLAN; Serial: 011KPAE000480

Communication System: WCDMA1700; Frequency: 1730.4 MHz;Duty Cycle: 1:1
Medium: 1750 Body Medium parameters used (interpolated):
f = 1730.4 MHz; σ = 1.52 mho/m; ε_r = 53.04; ρ = 1000 kg/m^3
Phantom section: Flat Section; Space: 1.0 cm

Test Date: 12-22-2010; Ambient Temp: 24.1 °C; Tissue Temp: 22.2 °C

Probe: ES3DV3 - SN3213; ConvF(4.8, 4.8, 4.8); Calibrated: 3/16/2010
Sensor-Surface: 4mm (Mechanical Surface Detection)
Electronics: DAE4 Sn704; Calibrated: 3/22/2010
Phantom: SAM Main; Type: SAM 4.0; Serial: TP-1406
Measurement SW: DASY4, V4.7 Build 80; Postprocessing SW: SEMCAD, V1.8 Build 186

Mode: WCDMA 1700, Body SAR, Right side, Mid.ch, Back-off Active

Area Scan (7x10x1): Measurement grid: dx=15mm, dy=15mm
Zoom Scan (5x5x7)/Cube 0: Measurement grid: dx=8mm, dy=8mm, dz=5mm
Reference Value = 9.78 V/m
Peak SAR (extrapolated) = 0.218 W/kg
SAR(1 g) = 0.139 mW/g; SAR(10 g) = 0.084 mW/g

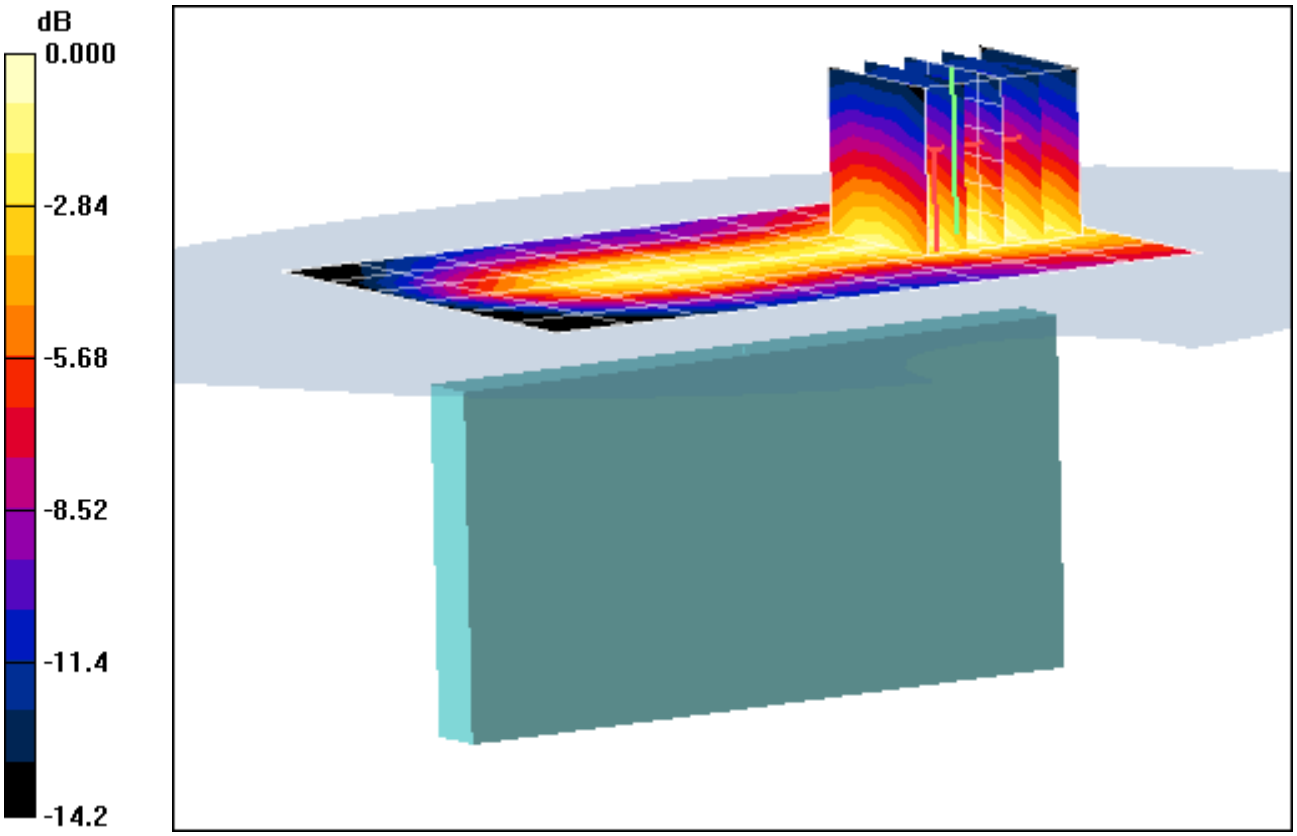

0 dB = 0.151mW/g

PCTEST ENGINEERING LABORATORY, INC.

DUT: BEJP999DW; Type: 850/1900 GSM/GPRS/EDGE and AWS WCDMA/HSPA Phone with Bluetooth and WLAN; Serial: 011KPAE000480

Communication System: WCDMA1700; Frequency: 1730.4 MHz;Duty Cycle: 1:1
Medium: 1750 Body Medium parameters used (interpolated):
f = 1730.4 MHz; σ = 1.52 mho/m; ε_r = 53.04; ρ = 1000 kg/m^3
Phantom section: Flat Section; Space: 1.0 cm

Test Date: 12-22-2010; Ambient Temp: 24.1 °C; Tissue Temp: 22.2 °C

Probe: ES3DV3 - SN3213; ConvF(4.8, 4.8, 4.8); Calibrated: 3/16/2010
Sensor-Surface: 4mm (Mechanical Surface Detection)
Electronics: DAE4 Sn704; Calibrated: 3/22/2010
Phantom: SAM Main; Type: SAM 4.0; Serial: TP-1406
Measurement SW: DASY4, V4.7 Build 80; Postprocessing SW: SEMCAD, V1.8 Build 186

Mode: WCDMA 1700, Body SAR, Left side, Mid.ch, Back-off Active

Area Scan (7x10x1): Measurement grid: dx=15mm, dy=15mm
Zoom Scan (5x5x7)/Cube 0: Measurement grid: dx=8mm, dy=8mm, dz=5mm
Reference Value = 9.74 V/m
Peak SAR (extrapolated) = 0.207 W/kg
SAR(1 g) = 0.124 mW/g; SAR(10 g) = 0.071 mW/g

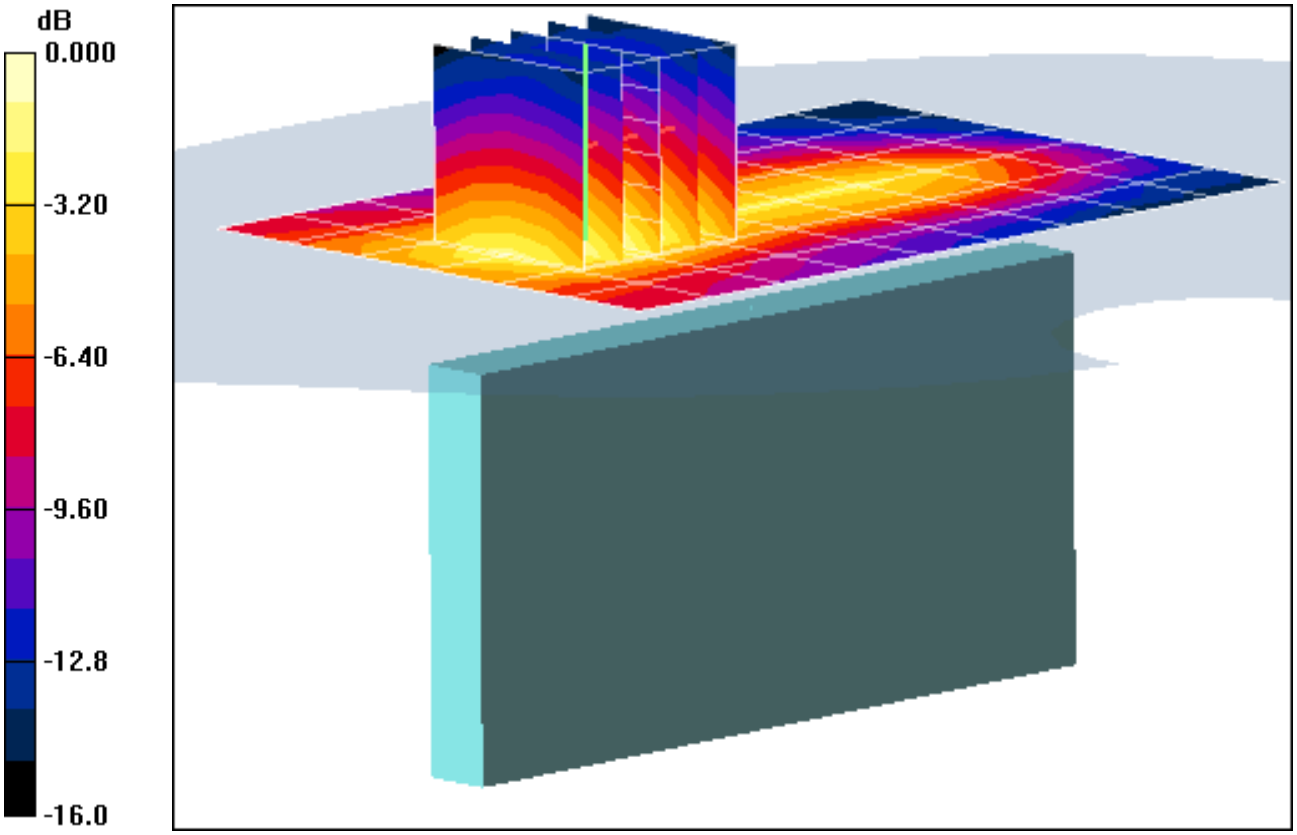

0 dB = 0.137mW/g

PCTEST ENGINEERING LABORATORY, INC.

DUT: BEJP999DW; Type: 850/1900 GSM/GPRS/EDGE and AWS WCDMA/HSPA Phone with Bluetooth and WLAN; Serial: 011KPAE000480

Communication System: WCDMA1700; Frequency: 1730.4 MHz;Duty Cycle: 1:1
Medium: 1750 Body Medium parameters used (interpolated):
f = 1730.4 MHz; σ = 1.52 mho/m; ε_r = 53.04; ρ = 1000 kg/m^3
Phantom section: Flat Section; Space: 1.0 cm

Test Date: 12-22-2010; Ambient Temp: 24.1 °C; Tissue Temp: 22.2 °C

Probe: ES3DV3 - SN3213; ConvF(4.8, 4.8, 4.8); Calibrated: 3/16/2010
Sensor-Surface: 4mm (Mechanical Surface Detection)
Electronics: DAE4 Sn704; Calibrated: 3/22/2010
Phantom: SAM Main; Type: SAM 4.0; Serial: TP-1406
Measurement SW: DASY4, V4.7 Build 80; Postprocessing SW: SEMCAD, V1.8 Build 186

Mode: WCDMA 1700, Body SAR, Bottom side, Mid.ch, Back-off Active

Area Scan (7x10x1): Measurement grid: dx=15mm, dy=15mm
Zoom Scan (5x5x7)/Cube 0: Measurement grid: dx=8mm, dy=8mm, dz=5mm
Reference Value = 22.6 V/m
Peak SAR (extrapolated) = 1.23 W/kg
SAR(1 g) = 0.722 mW/g; SAR(10 g) = 0.394 mW/g

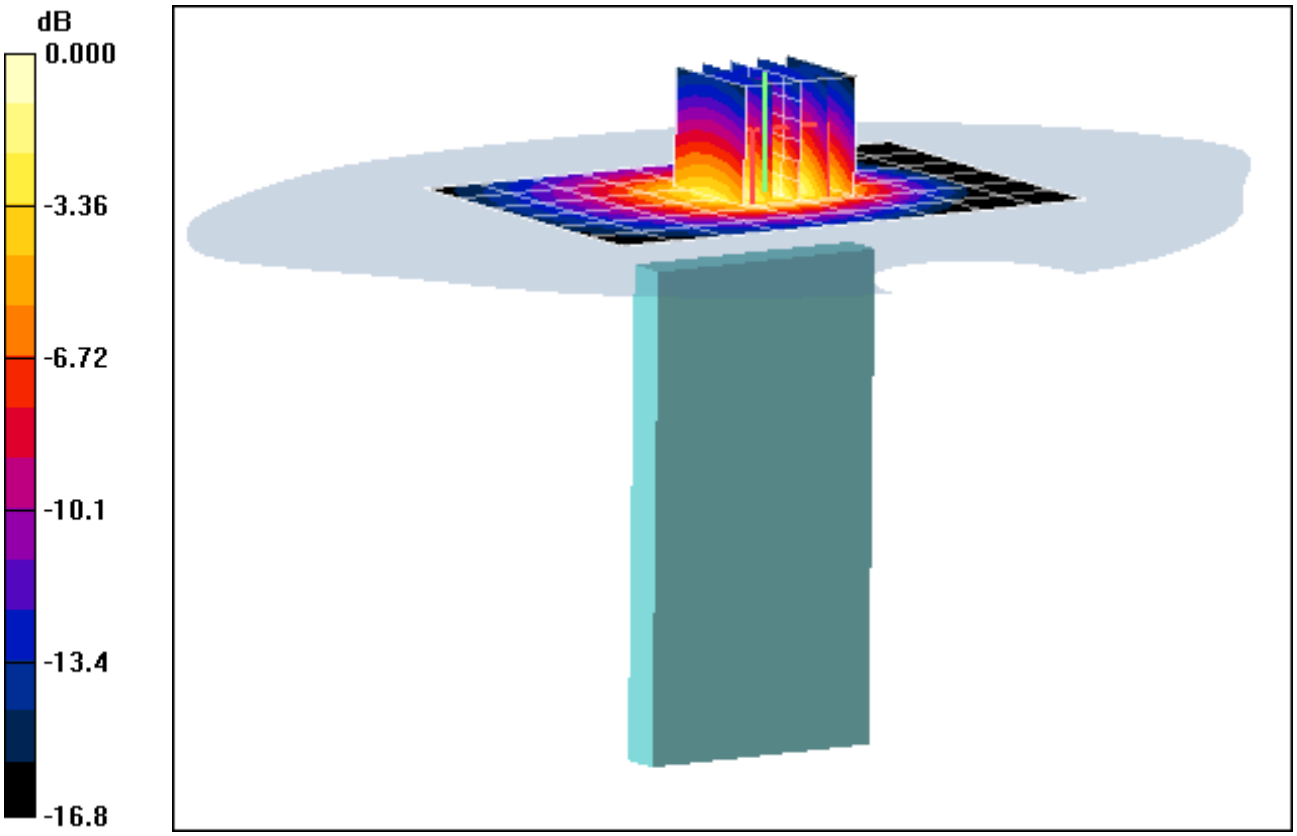

0 dB = 0.787mW/g

PCTEST ENGINEERING LABORATORY, INC.

DUT: BEJP999DW; Type: 850/1900 GSM/GPRS/EDGE and AWS WCDMA/HSPA Phone with Bluetooth and WLAN; Serial: 011KPAE000480

Communication System: WCDMA1700; Frequency: 1730.4 MHz;Duty Cycle: 1:1
Medium: 1750 Body Medium parameters used (interpolated):
f = 1730.4 MHz; σ = 1.52 mho/m; ε_r = 53.04; ρ = 1000 kg/m^3
Phantom section: Flat Section; Space: 1.0 cm

Test Date: 12-22-2010; Ambient Temp: 24.1 °C; Tissue Temp: 22.2 °C

Probe: ES3DV3 - SN3213; ConvF(4.8, 4.8, 4.8); Calibrated: 3/16/2010
Sensor-Surface: 4mm (Mechanical Surface Detection)
Electronics: DAE4 Sn704; Calibrated: 3/22/2010
Phantom: SAM Main; Type: SAM 4.0; Serial: TP-1406
Measurement SW: DASY4, V4.7 Build 80; Postprocessing SW: SEMCAD, V1.8 Build 186

Mode: WCDMA 1700, Body SAR, Bottom side, Mid.ch, Back-off Active

Area Scan (7x10x1): Measurement grid: dx=15mm, dy=15mm
Zoom Scan (5x5x7)/Cube 0: Measurement grid: dx=8mm, dy=8mm, dz=5mm
Reference Value = 22.6 V/m
Peak SAR (extrapolated) = 1.23 W/kg
SAR(1 g) = 0.722 mW/g; SAR(10 g) = 0.394 mW/g

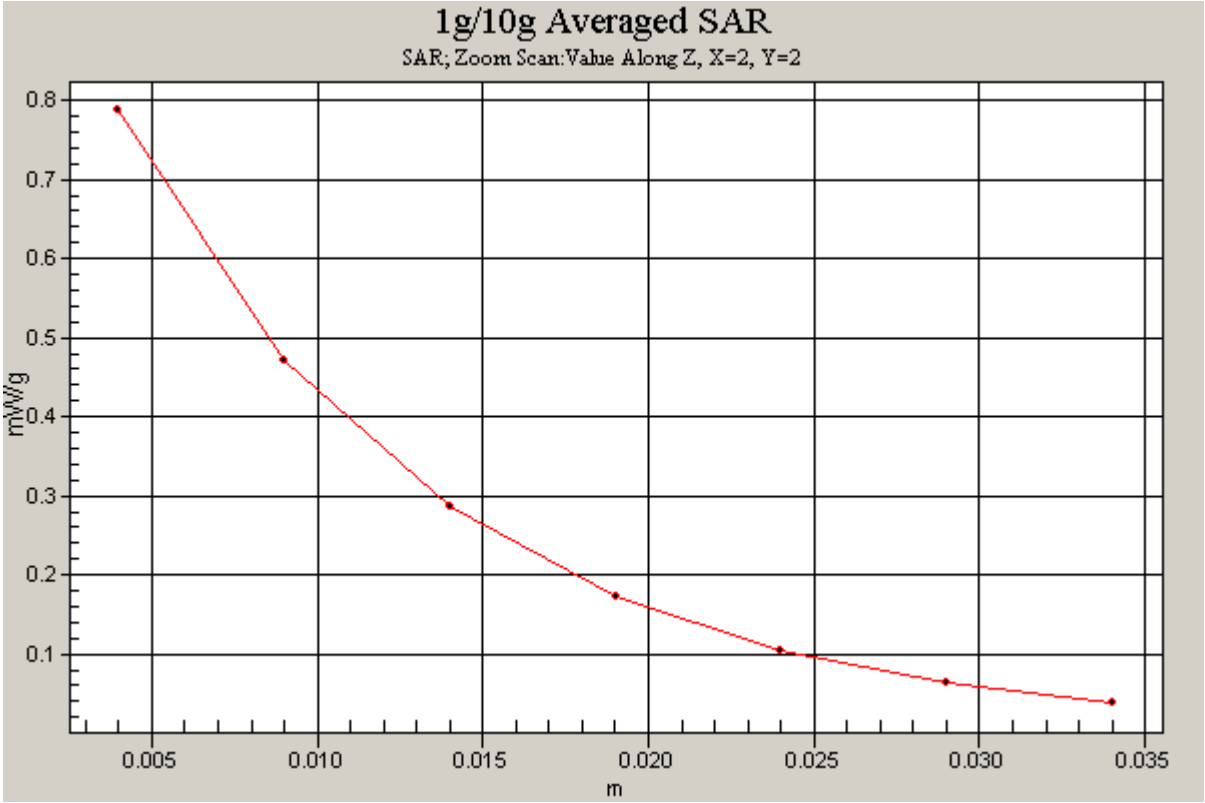

PCTEST ENGINEERING LABORATORY, INC.

DUT: BEJP999DW; Type: 850/1900 GSM/GPRS/EDGE and AWS WCDMA/HSPA Phone with Bluetooth and WLAN; Serial: 011KPAE000480

Communication System: IEEE 802.11b; Frequency: 2462 MHz;Duty Cycle: 1:1
Medium: 2450 Body Medium parameters used (interpolated):
f = 2462 MHz; σ = 1.94 mho/m; ε_r = 50.2; ρ = 1000 kg/m^3
Phantom section: Flat Section; Space: 1.0 cm

Test Date: 12-23-2010; Ambient Temp: 23.8 °C; Tissue Temp: 22.0 °C

Probe: ES3DV3 - SN3213; ConvF(4.27, 4.27, 4.27); Calibrated: 3/16/2010
Sensor-Surface: 3mm (Mechanical Surface Detection)
Electronics: DAE4 Sn704; Calibrated: 3/22/2010
Phantom: SAM Main; Type: SAM 4.0; Serial: TP-1406
Measurement SW: DASY4, V4.7 Build 80; Postprocessing SW: SEMCAD, V1.8 Build 186

Mode: IEEE 802.11b, Body SAR, Ch 11, 1 Mbps, Back Side

Area Scan (7x11x1): Measurement grid: dx=15mm, dy=15mm
Zoom Scan (5x5x7)/Cube 0: Measurement grid: dx=8mm, dy=8mm, dz=5mm
Reference Value = 8.56 V/m
Peak SAR (extrapolated) = 0.280 W/kg
SAR(1 g) = 0.135 mW/g; SAR(10 g) = 0.071 mW/g

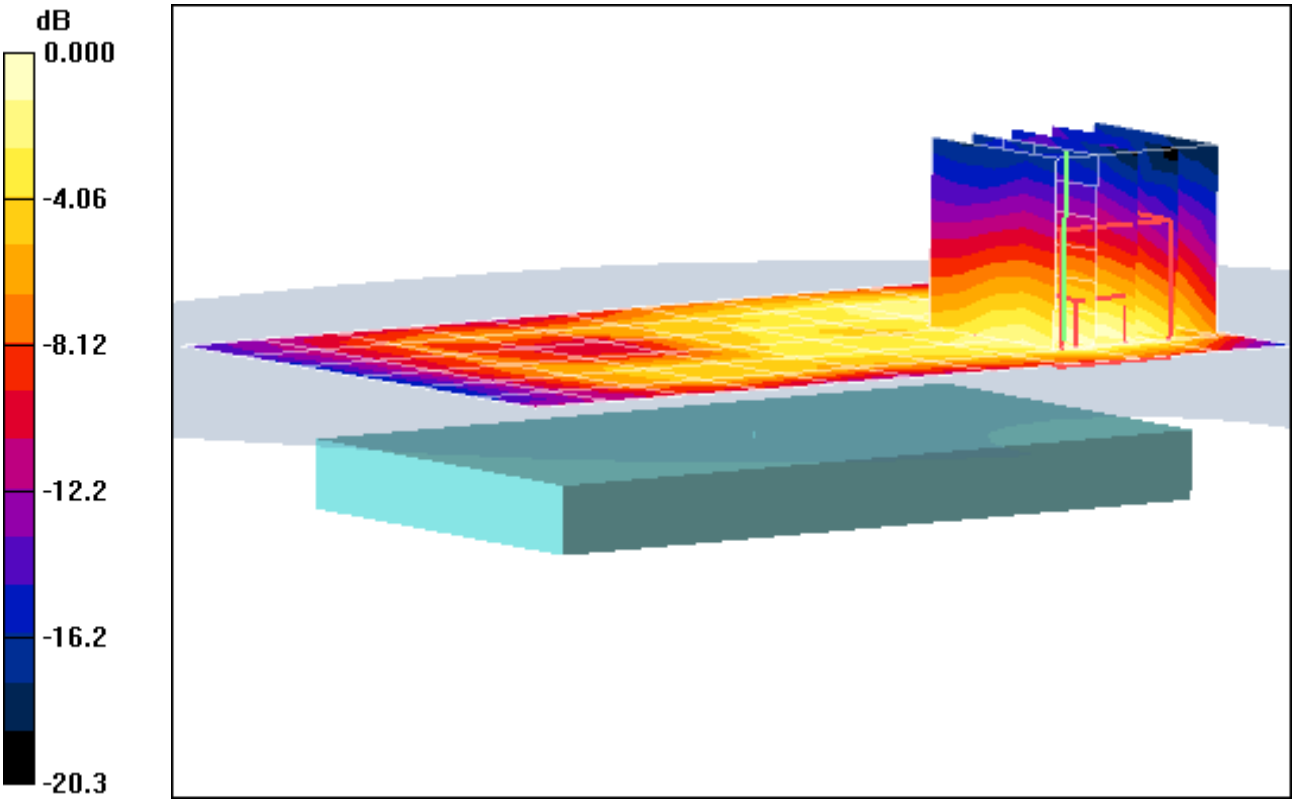

0 dB = 0.169mW/g

PCTEST ENGINEERING LABORATORY, INC.

DUT: BEJP999DW; Type: 850/1900 GSM/GPRS/EDGE and AWS WCDMA/HSPA Phone with Bluetooth and WLAN; Serial: 011KPAE000480

Communication System: IEEE 802.11b; Frequency: 2462 MHz;Duty Cycle: 1:1
Medium: 2450 Body Medium parameters used (interpolated):
f = 2462 MHz; σ = 1.94 mho/m; ε_r = 50.2; ρ = 1000 kg/m^3
Phantom section: Flat Section; Space: 1.0 cm

Test Date: 12-23-2010; Ambient Temp: 23.8 °C; Tissue Temp: 22.0 °C

Probe: ES3DV3 - SN3213; ConvF(4.27, 4.27, 4.27); Calibrated: 3/16/2010
Sensor-Surface: 3mm (Mechanical Surface Detection)
Electronics: DAE4 Sn704; Calibrated: 3/22/2010
Phantom: SAM Main; Type: SAM 4.0; Serial: TP-1406
Measurement SW: DASY4, V4.7 Build 80; Postprocessing SW: SEMCAD, V1.8 Build 186

Mode: IEEE 802.11b, Body SAR, Ch 11, 1 Mbps, Front Side

Area Scan (7x11x1): Measurement grid: dx=15mm, dy=15mm
Zoom Scan (5x5x7)/Cube 0: Measurement grid: dx=8mm, dy=8mm, dz=5mm
Reference Value = 8.86 V/m
Peak SAR (extrapolated) = 0.292 W/kg
SAR(1 g) = 0.151 mW/g; SAR(10 g) = 0.084 mW/g

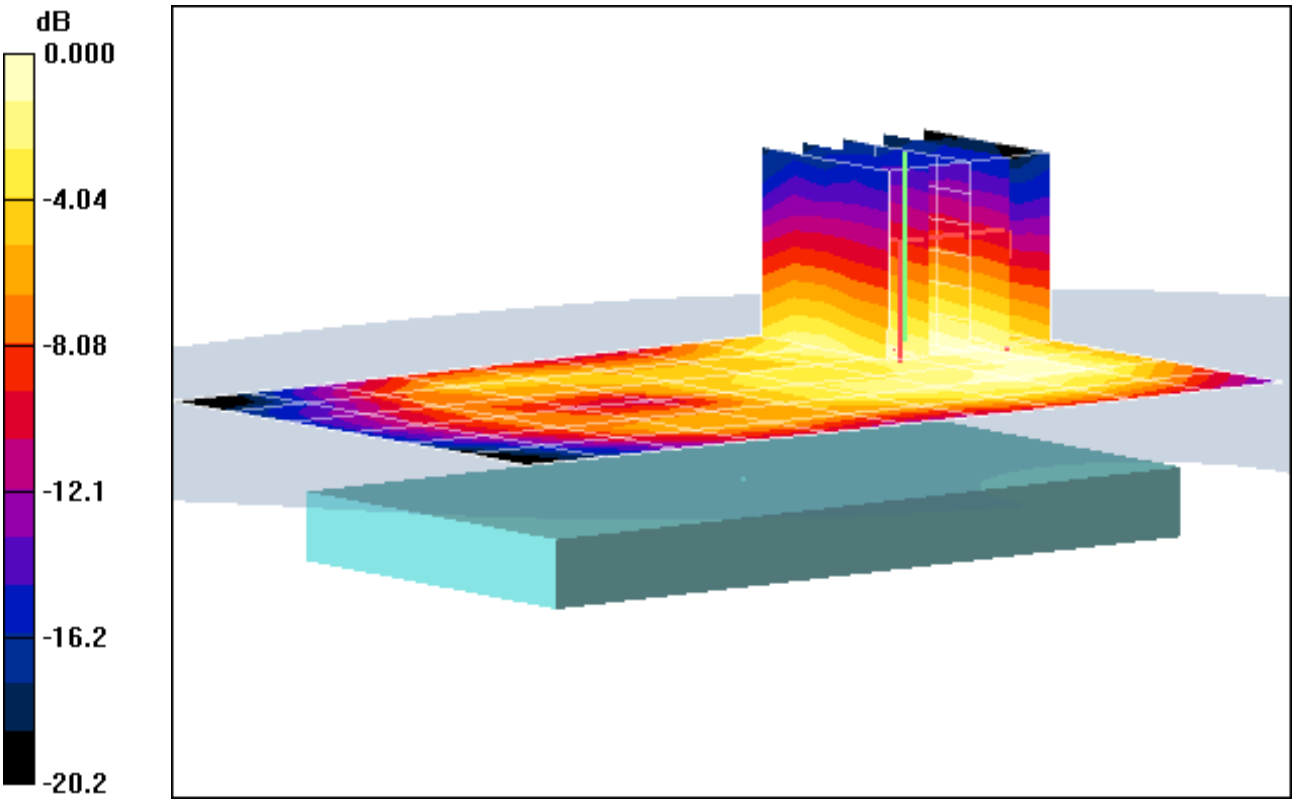

0 dB = 0.187mW/g

PCTEST ENGINEERING LABORATORY, INC.

DUT: BEJP999DW; Type: 850/1900 GSM/GPRS/EDGE and AWS WCDMA/HSPA Phone with Bluetooth and WLAN; Serial: 011KPAE000480

Communication System: IEEE 802.11b; Frequency: 2462 MHz;Duty Cycle: 1:1
Medium: 2450 Body Medium parameters used (interpolated):
f = 2462 MHz; σ = 1.94 mho/m; ε_r = 50.2; ρ = 1000 kg/m^3
Phantom section: Flat Section; Space: 1.0 cm

Test Date: 12-23-2010; Ambient Temp: 23.8 °C; Tissue Temp: 22.0 °C

Probe: ES3DV3 - SN3213; ConvF(4.27, 4.27, 4.27); Calibrated: 3/16/2010
Sensor-Surface: 3mm (Mechanical Surface Detection)
Electronics: DAE4 Sn704; Calibrated: 3/22/2010
Phantom: SAM Main; Type: SAM 4.0; Serial: TP-1406
Measurement SW: DASY4, V4.7 Build 80; Postprocessing SW: SEMCAD, V1.8 Build 186

Mode: IEEE 802.11b, Body SAR, Ch 11, 1 Mbps, Right Side

Area Scan (5x11x1): Measurement grid: dx=15mm, dy=15mm
Zoom Scan (5x5x7)/Cube 0: Measurement grid: dx=8mm, dy=8mm, dz=5mm
Reference Value = 5.76 V/m
Peak SAR (extrapolated) = 0.118 W/kg
SAR(1 g) = 0.063 mW/g; SAR(10 g) = 0.034 mW/g

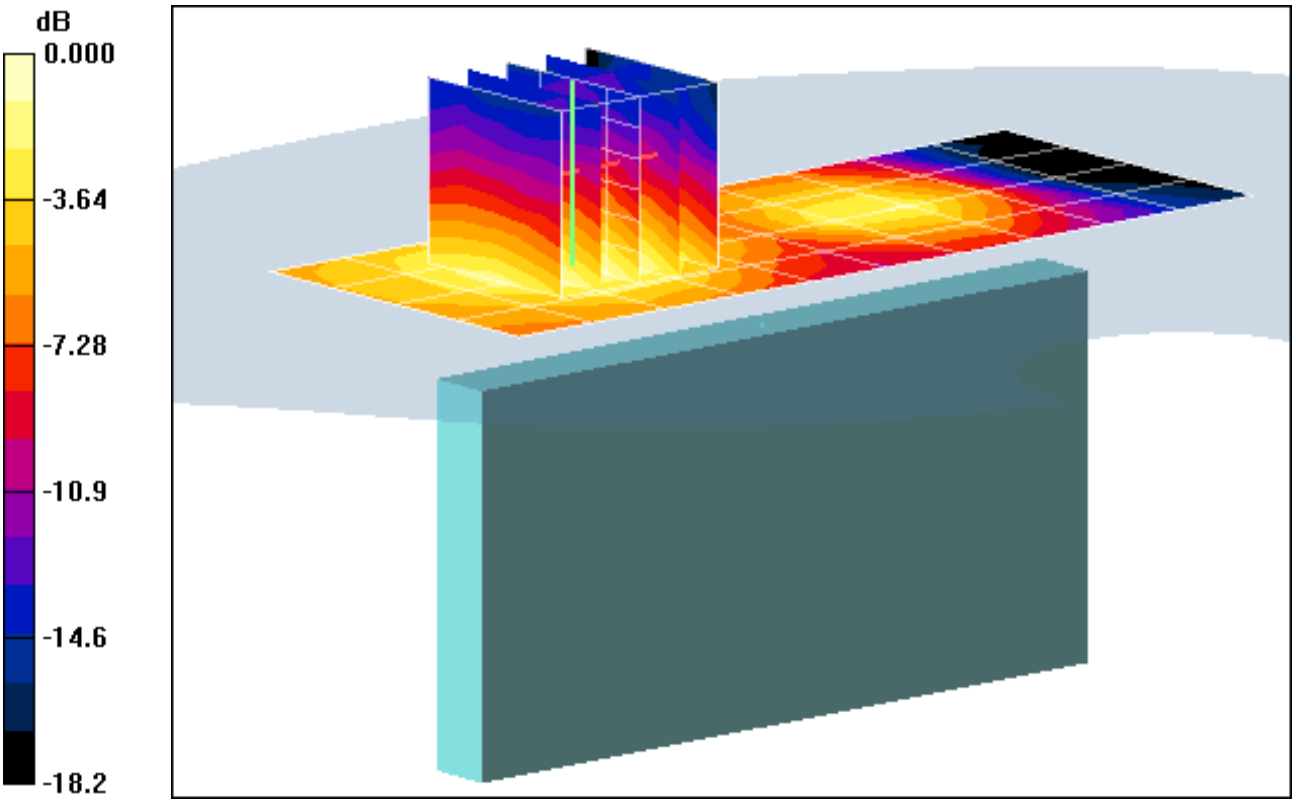

0 dB = 0.078mW/g

PCTEST ENGINEERING LABORATORY, INC.

DUT: BEJP999DW; Type: 850/1900 GSM/GPRS/EDGE and AWS WCDMA/HSPA Phone with Bluetooth and WLAN; Serial: 011KPAE000480

Communication System: IEEE 802.11b; Frequency: 2462 MHz;Duty Cycle: 1:1
Medium: 2450 Body Medium parameters used (interpolated):
f = 2462 MHz; σ = 1.94 mho/m; ε_r = 50.2; ρ = 1000 kg/m^3
Phantom section: Flat Section; Space: 1.0 cm

Test Date: 12-23-2010; Ambient Temp: 23.8 °C; Tissue Temp: 22.0 °C

Probe: ES3DV3 - SN3213; ConvF(4.27, 4.27, 4.27); Calibrated: 3/16/2010
Sensor-Surface: 3mm (Mechanical Surface Detection)
Electronics: DAE4 Sn704; Calibrated: 3/22/2010
Phantom: SAM Main; Type: SAM 4.0; Serial: TP-1406
Measurement SW: DASY4, V4.7 Build 80; Postprocessing SW: SEMCAD, V1.8 Build 186

Mode: IEEE 802.11b, Body SAR, Ch 11, 1 Mbps, Left Side

Area Scan (5x11x1): Measurement grid: dx=15mm, dy=15mm
Zoom Scan (5x5x7)/Cube 0: Measurement grid: dx=8mm, dy=8mm, dz=5mm
Reference Value = 10.1 V/m
Peak SAR (extrapolated) = 0.336 W/kg
SAR(1 g) = 0.178 mW/g; SAR(10 g) = 0.095 mW/g

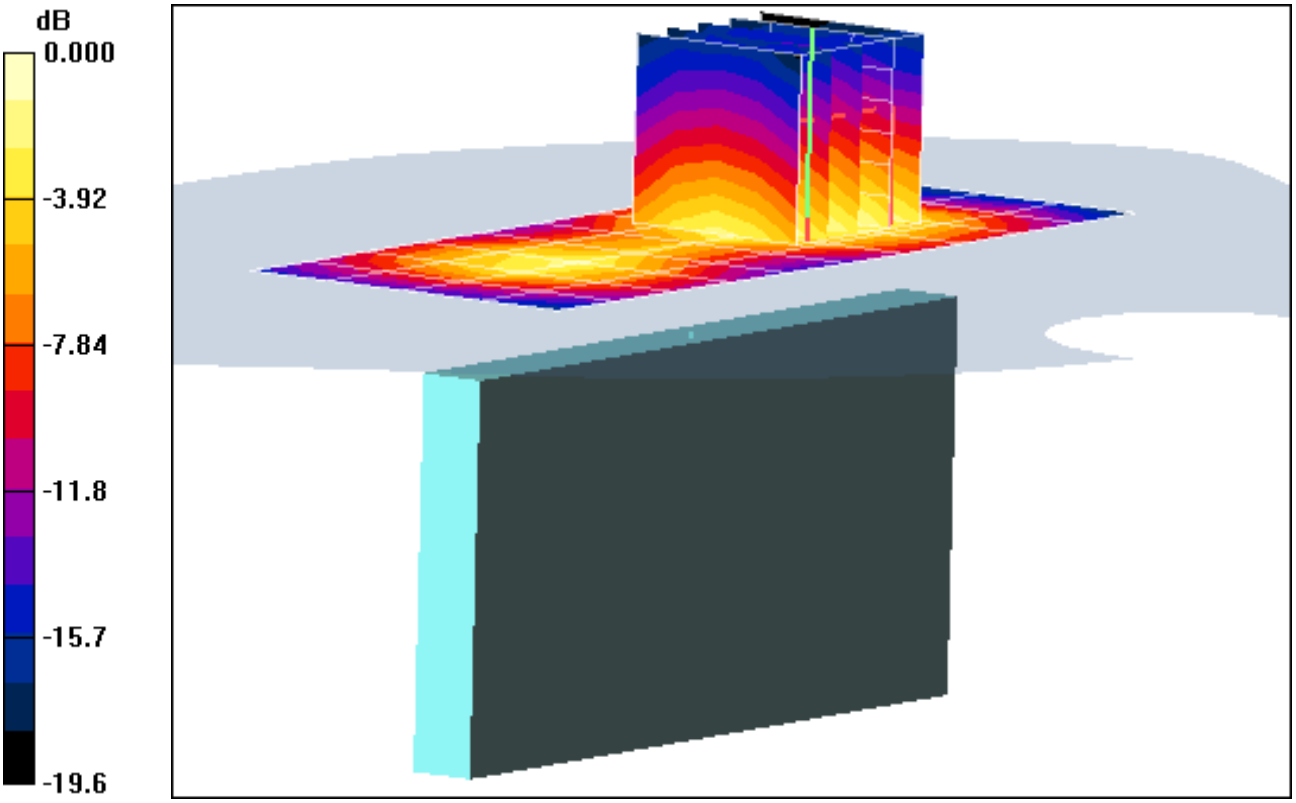

0 dB = 0.217mW/g

PCTEST ENGINEERING LABORATORY, INC.

DUT: BEJP999DW; Type: 850/1900 GSM/GPRS/EDGE and AWS WCDMA/HSPA Phone with Bluetooth and WLAN; Serial: 011KPAE000480

Communication System: IEEE 802.11b; Frequency: 2462 MHz;Duty Cycle: 1:1
Medium: 2450 Body Medium parameters used (interpolated):
f = 2462 MHz; σ = 1.94 mho/m; ε_r = 50.2; ρ = 1000 kg/m^3
Phantom section: Flat Section; Space: 1.0 cm

Test Date: 12-23-2010; Ambient Temp: 23.8 °C; Tissue Temp: 22.0 °C

Probe: ES3DV3 - SN3213; ConvF(4.27, 4.27, 4.27); Calibrated: 3/16/2010
Sensor-Surface: 3mm (Mechanical Surface Detection)
Electronics: DAE4 Sn704; Calibrated: 3/22/2010
Phantom: SAM Main; Type: SAM 4.0; Serial: TP-1406
Measurement SW: DASY4, V4.7 Build 80; Postprocessing SW: SEMCAD, V1.8 Build 186

Mode: IEEE 802.11b, Body SAR, Ch 11, 1 Mbps, Top Side

Area Scan (5x7x1): Measurement grid: dx=15mm, dy=15mm
Zoom Scan (5x5x7)/Cube 0: Measurement grid: dx=8mm, dy=8mm, dz=5mm
Reference Value = 3.39 V/m
Peak SAR (extrapolated) = 0.365 W/kg
SAR(1 g) = 0.190 mW/g; SAR(10 g) = 0.098 mW/g

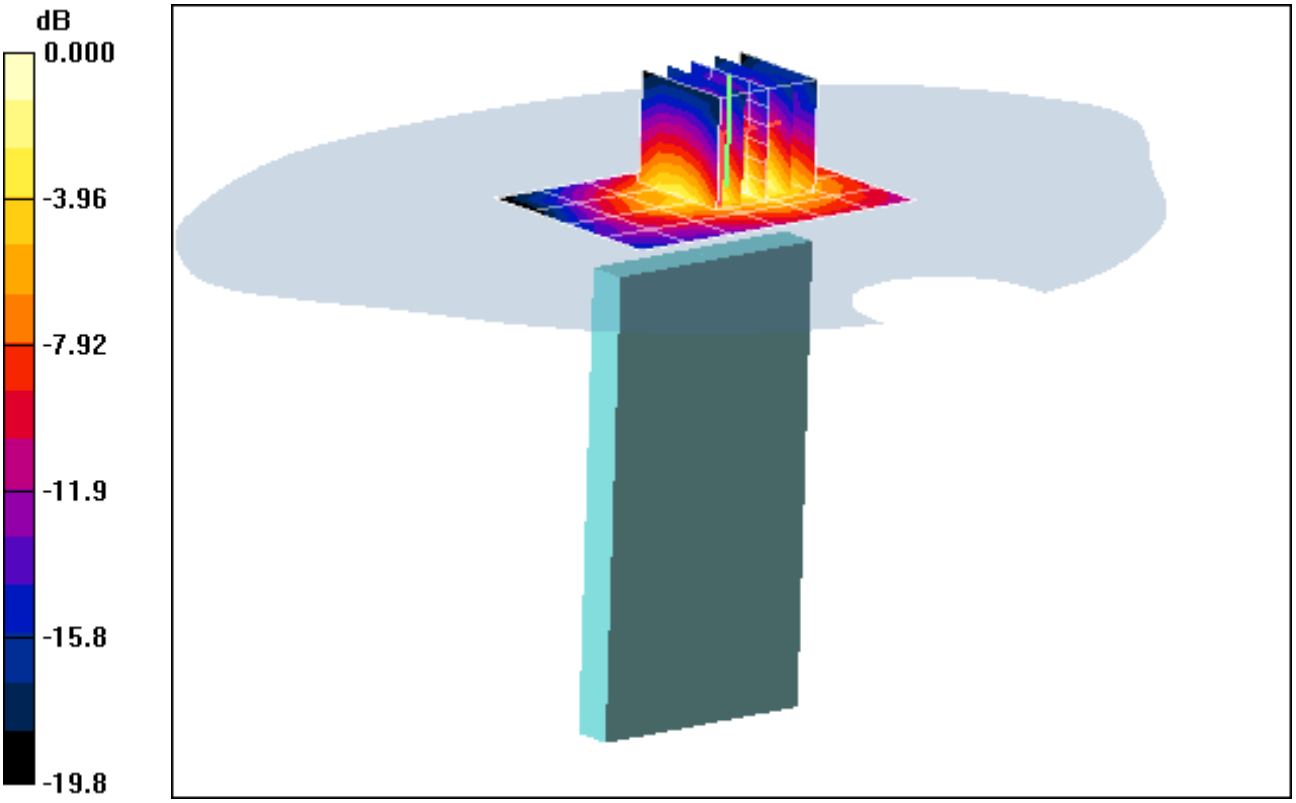

0 dB = 0.238mW/g

PCTEST ENGINEERING LABORATORY, INC.

DUT: BEJP999DW; Type: 850/1900 GSM/GPRS/EDGE and AWS WCDMA/HSPA Phone with Bluetooth and WLAN; Serial: 011KPAE000480

Communication System: IEEE 802.11b; Frequency: 2462 MHz;Duty Cycle: 1:1
Medium: 2450 Body Medium parameters used (interpolated):
f = 2462 MHz; σ = 1.94 mho/m; ε_r = 50.2; ρ = 1000 kg/m^3
Phantom section: Flat Section; Space: 1.0 cm

Test Date: 12-23-2010; Ambient Temp: 23.8 °C; Tissue Temp: 22.0 °C

Probe: ES3DV3 - SN3213; ConvF(4.27, 4.27, 4.27); Calibrated: 3/16/2010
Sensor-Surface: 3mm (Mechanical Surface Detection)
Electronics: DAE4 Sn704; Calibrated: 3/22/2010
Phantom: SAM Main; Type: SAM 4.0; Serial: TP-1406
Measurement SW: DASY4, V4.7 Build 80; Postprocessing SW: SEMCAD, V1.8 Build 186

Mode: IEEE 802.11b, Body SAR, Ch 11, 1 Mbps, Top Side

Area Scan (5x7x1): Measurement grid: dx=15mm, dy=15mm
Zoom Scan (5x5x7)/Cube 0: Measurement grid: dx=8mm, dy=8mm, dz=5mm
Reference Value = 3.39 V/m
Peak SAR (extrapolated) = 0.365 W/kg
SAR(1 g) = 0.190 mW/g; SAR(10 g) = 0.098 mW/g

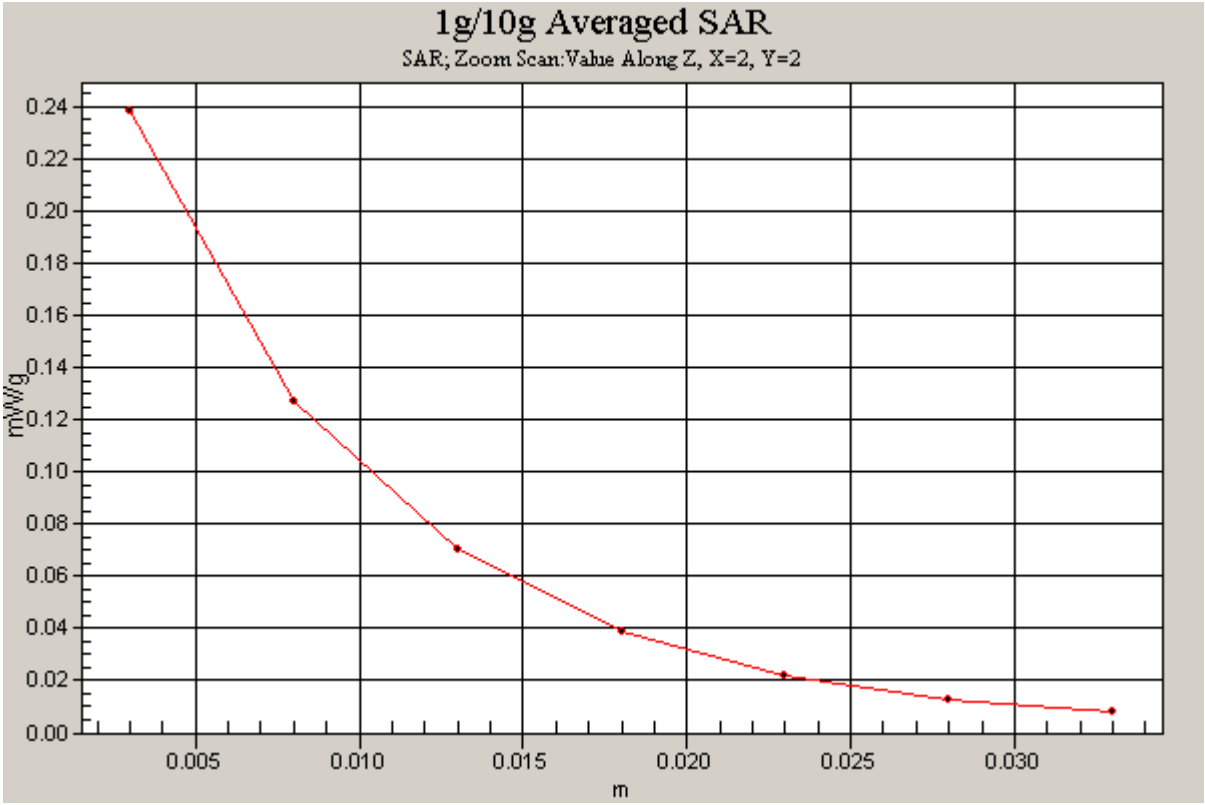

APPENDIX B: DIPOLE VALIDATION

PCTEST ENGINEERING LABORATORY, INC.

DUT: Dipole 835 MHz; Type: D835V2; Serial: 4d026

Communication System: CW; Frequency: 835 MHz;Duty Cycle: 1:1
Medium: 835 Brain Medium parameters used:
f = 835 MHz; σ = 0.879 mho/m; ε_r = 39.9; ρ = 1000 kg/m^3
Phantom section: Flat Section; Space: 1.5 cm

Test Date: 12-13-2010; Ambient Temp: 23.5°C; Tissue Temp: 22.2°C

Probe: EX3DV4 - SN3550; ConvF(8.28, 8.28, 8.28); Calibrated: 1/26/2010
Sensor-Surface: 4mm (Mechanical Surface Detection)
Electronics: DAE4 Sn649; Calibrated: 1/22/2010
Phantom: SAM Main; Type: SAM 4.0; Serial: TP-1114
Measurement SW: DASY4, V4.7 Build 80; Postprocessing SW: SEMCAD, V1.8 Build 186

835MHz System Verification

Area Scan (7x13x1): Measurement grid: dx=15mm, dy=15mm
Zoom Scan (5x5x7)/Cube 0: Measurement grid: dx=8mm, dy=8mm, dz=5mm
Input Power = 20 dBm (100 mW)
SAR(1 g) = 0.921 mW/g; SAR(10 g) = 0.597 mW/g
Deviation = -2.64 %

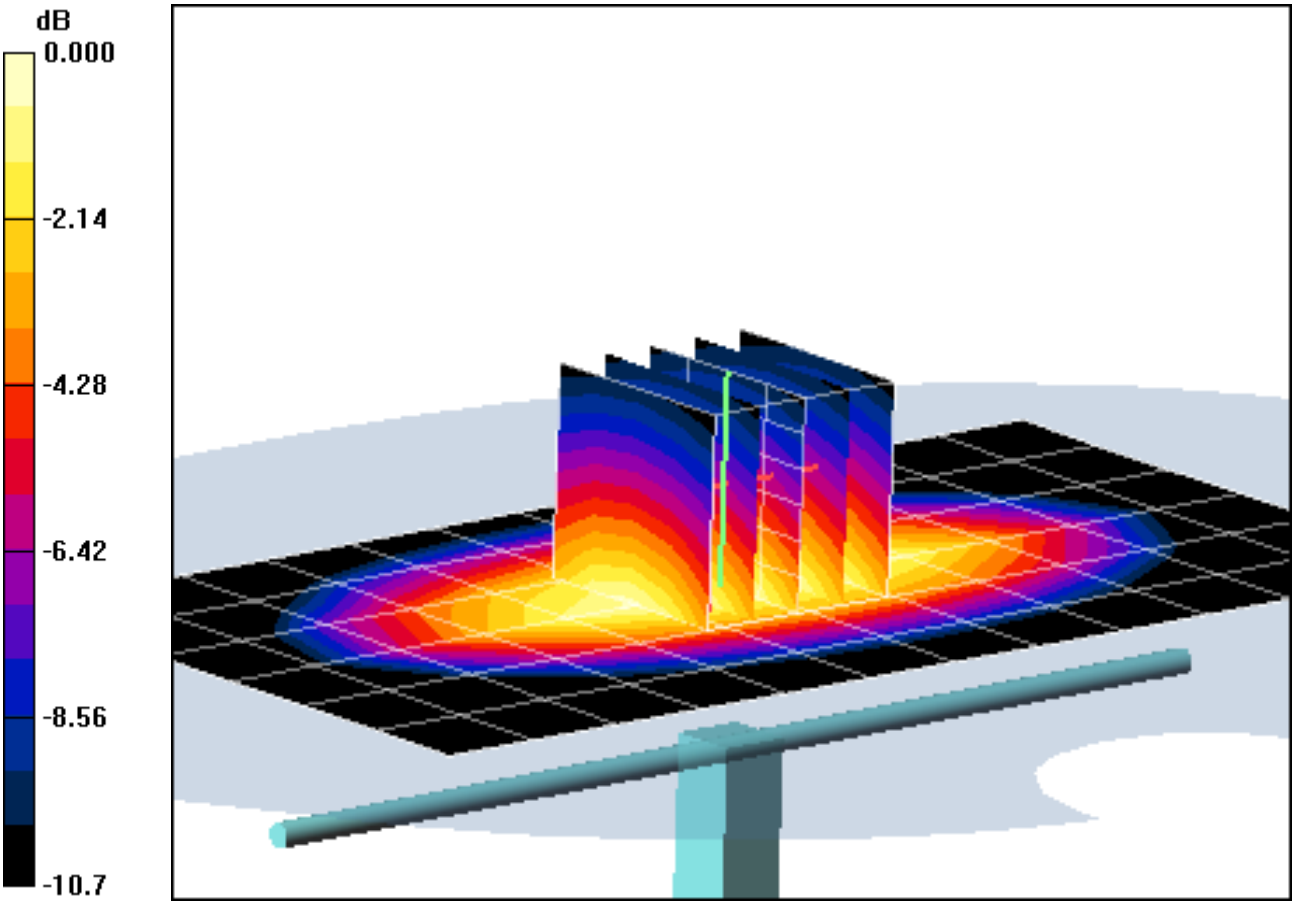

0 dB = 0.994mW/g

PCTEST ENGINEERING LABORATORY, INC.

DUT: Dipole 835 MHz; Type: D835V2; Serial: 4d026

Communication System: CW; Frequency: 835 MHz;Duty Cycle: 1:1
Medium: 835 Body Medium parameters used:
f = 835 MHz; σ = 0.993 mho/m; ε_r = 55.3; ρ = 1000 kg/m^3
Phantom section: Flat Section; Space: 1.5 cm

Test Date: 12-20-2010; Ambient Temp: 23.8°C; Tissue Temp: 21.9°C

Probe: EX3DV4 - SN3550; ConvF(8.3, 8.3, 8.3); Calibrated: 1/26/2010
Sensor-Surface: 4mm (Mechanical Surface Detection)
Electronics: DAE4 Sn649; Calibrated: 1/22/2010
Phantom: SAM Main; Type: SAM 4.0; Serial: TP-1114
Measurement SW: DASY4, V4.7 Build 80; Postprocessing SW: SEMCAD, V1.8 Build 186

835MHz System Verification

Area Scan (7x13x1): Measurement grid: dx=15mm, dy=15mm
Zoom Scan (5x5x7)/Cube 0: Measurement grid: dx=8mm, dy=8mm, dz=5mm
Input Power = 20 dBm (100 mW)
SAR(1 g) = 0.975 mW/g; SAR(10 g) = 0.638 mW/g
Deviation = -0.31 %

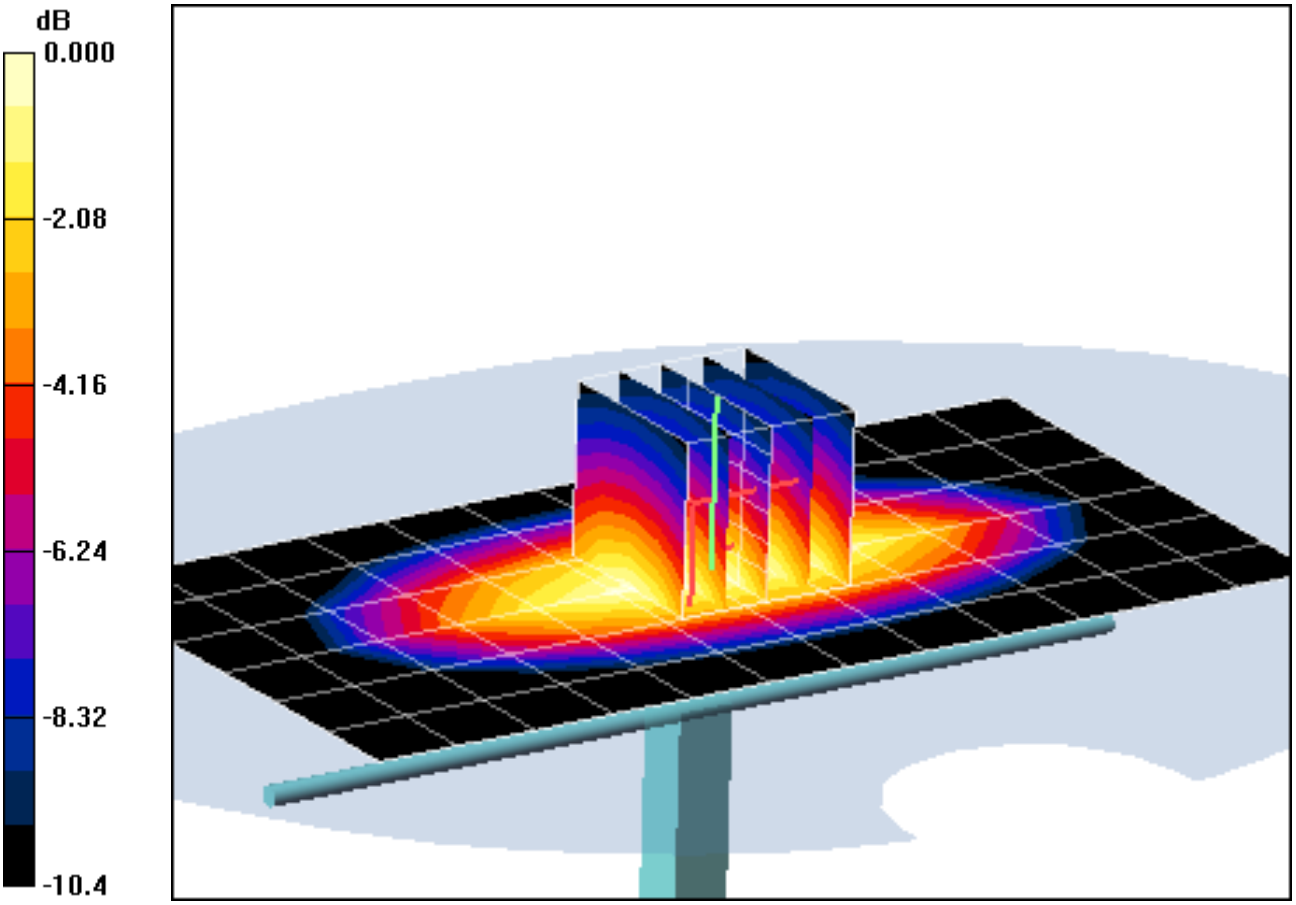

0 dB = 1.05mW/g

PCTEST ENGINEERING LABORATORY, INC.

DUT: Dipole 1765 MHz; Type: D1765V2; Serial: 1008

Communication System: CW; Frequency: 1765 MHz;Duty Cycle: 1:1
Medium: 1750 Brain Medium parameters used (interpolated):
f = 1765 MHz; σ = 1.4 mho/m; ε_r = 39.6; ρ = 1000 kg/m^3
Phantom section: Flat Section; Space: 1.0 cm

Test Date: 12-16-2010; Ambient Temp: 23.2°C; Tissue Temp: 21.6°C

Probe: EX3DV4 - SN3550; ConvF(7.03, 7.03, 7.03); Calibrated: 1/26/2010
Sensor-Surface: 4mm (Mechanical Surface Detection)
Electronics: DAE4 Sn649; Calibrated: 1/22/2010
Phantom: SAM Main; Type: SAM 4.0; Serial: TP-1114
Measurement SW: DASY4, V4.7 Build 80; Postprocessing SW: SEMCAD, V1.8 Build 186

1765 MHz System Verification

Area Scan (6x7x1): Measurement grid: dx=15mm, dy=15mm
Zoom Scan (5x5x7)/Cube 0: Measurement grid: dx=8mm, dy=8mm, dz=5mm
Input Power = 16 dBm (40 mW)
SAR(1 g) = 1.45 mW/g; SAR(10 g) = 0.747 mW/g
Deviation = -5.10 %

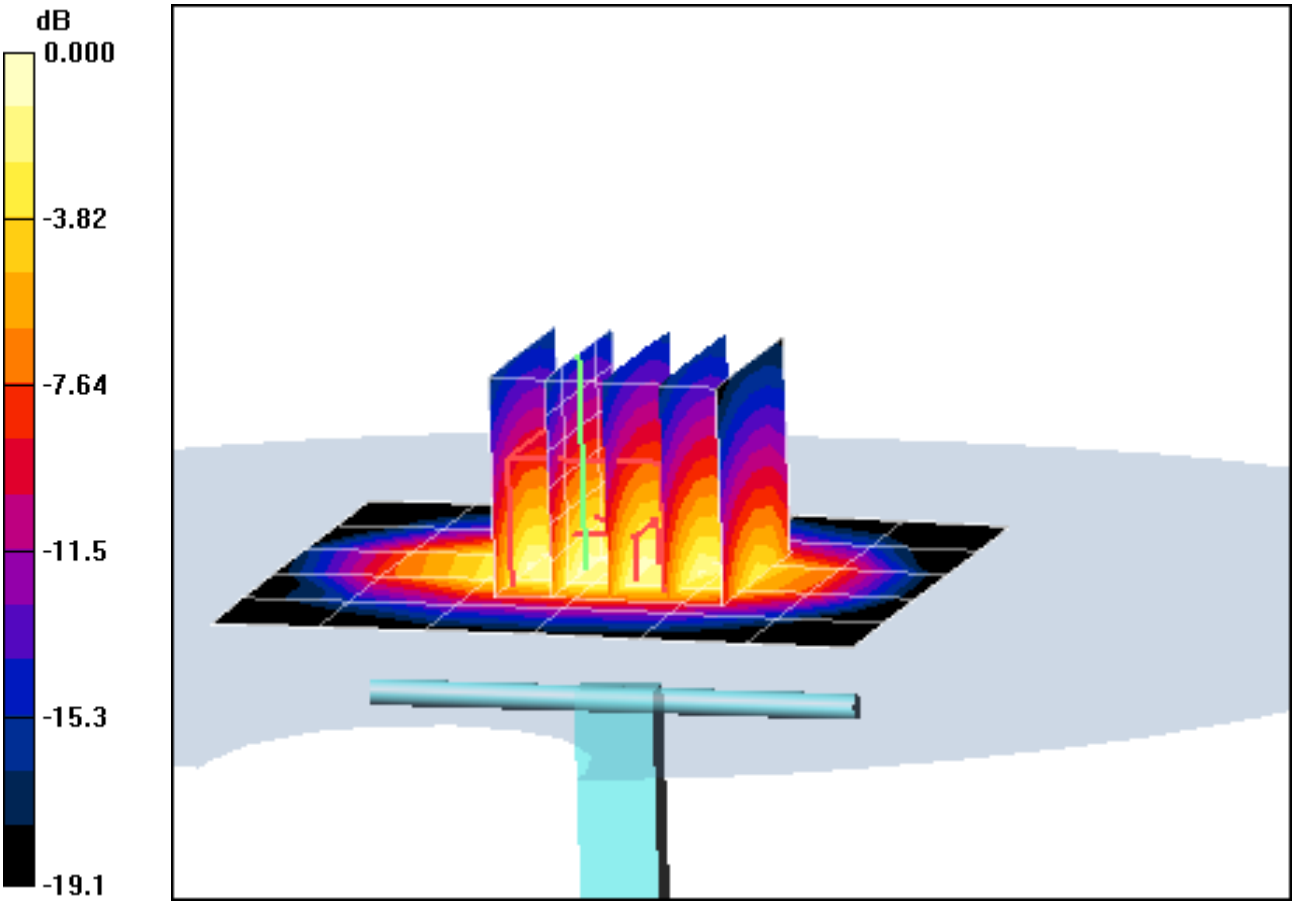

0 dB = 1.58mW/g

PCTEST ENGINEERING LABORATORY, INC.

DUT: Dipole 1765 MHz; Type: D1765V2; Serial: 1008

Communication System: CW; Frequency: 1765 MHz;Duty Cycle: 1:1
Medium: 1750 Body Medium parameters used (interpolated):
f = 1765 MHz; σ = 1.56 mho/m; ε_r = 53; ρ = 1000 kg/m^3
Phantom section: Flat Section; Space: 1.0 cm

Test Date: 12-22-2010; Ambient Temp: 24.1 °C; Tissue Temp: 22.2 °C

Probe: ES3DV3 - SN3213; ConvF(4.8, 4.8, 4.8); Calibrated: 3/16/2010
Sensor-Surface: 4mm (Mechanical Surface Detection)
Electronics: DAE4 Sn704; Calibrated: 3/22/2010
Phantom: SAM Main; Type: SAM 4.0; Serial: TP-1406
Measurement SW: DASY4, V4.7 Build 80; Postprocessing SW: SEMCAD, V1.8 Build 186

1765 MHz System Verification

Area Scan (6x6x1): Measurement grid: dx=15mm, dy=15mm
Zoom Scan (5x5x7)/Cube 0: Measurement grid: dx=8mm, dy=8mm, dz=5mm
Input Power = 16 dBm (40 mW)
SAR(1 g) = 1.5 mW/g; SAR(10 g) = 0.773 mW/g
Deviation = 0.54 %

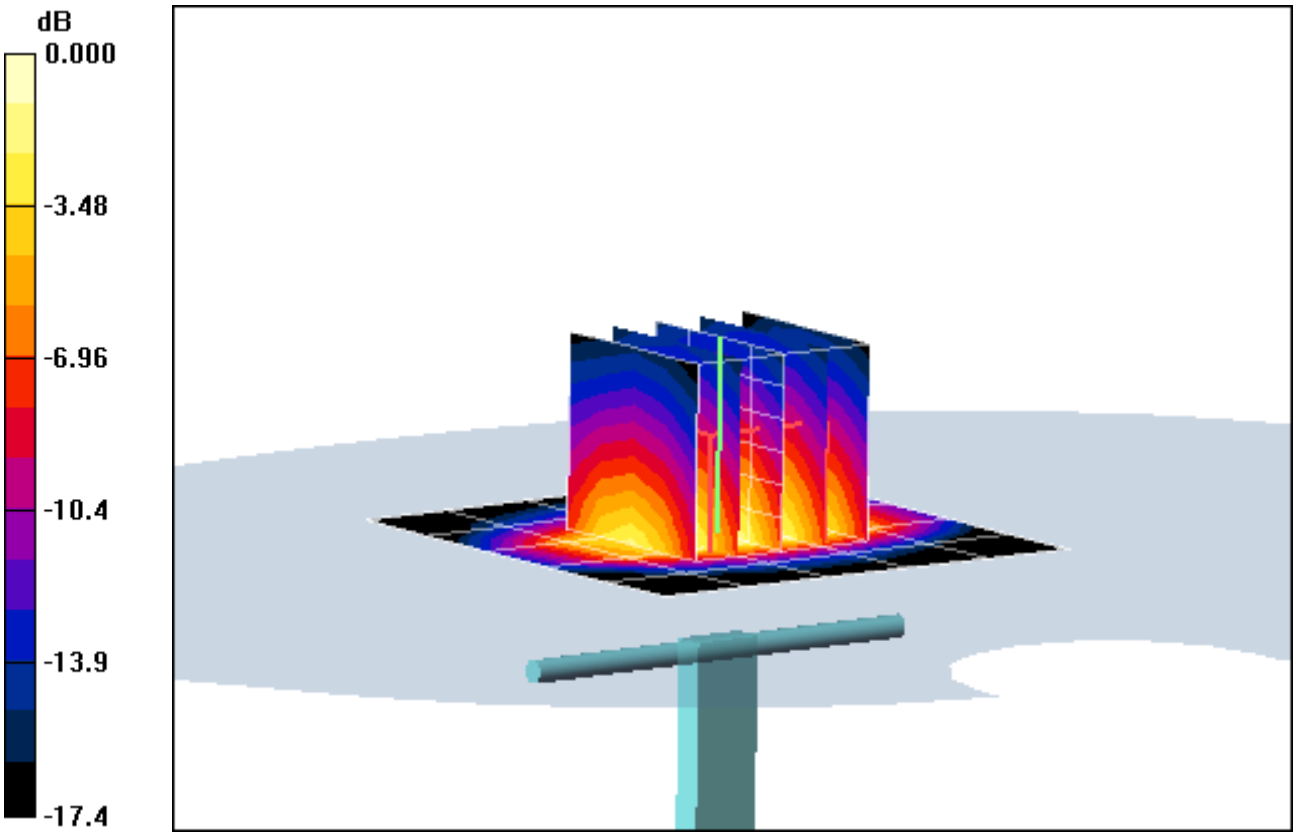

0 dB = 1.68mW/g

PCTEST ENGINEERING LABORATORY, INC.

DUT: SAR Dipole 1900 MHz; Type: D1900V2; Serial: 5d080

Communication System: CW; Frequency: 1900 MHz;Duty Cycle: 1:1
Medium: 1900 Brain Medium parameters used (interpolated):
f = 1900 MHz; σ = 1.4 mho/m; ε_r = 39.4; ρ = 1000 kg/m^3
Phantom section: Flat Section; Space: 1.0 cm

Test Date: 12-13-2010; Ambient Temp: 22.1°C; Tissue Temp: 20.9°C

Probe: EX3DV4 - SN3561; ConvF(6.69, 6.69, 6.69); Calibrated: 8/19/2010
Sensor-Surface: 4mm (Mechanical Surface Detection)
Electronics: DAE4 Sn665; Calibrated: 4/21/2010
Phantom: SAM with CRP; Type: SAM; Serial: TP1375
Measurement SW: DASY4, V4.7 Build 80; Postprocessing SW: SEMCAD, V1.8 Build 186

1900MHz System Verification

Area Scan (5x7x1): Measurement grid: dx=15mm, dy=15mm
Zoom Scan (5x5x7)/Cube 0: Measurement grid: dx=8mm, dy=8mm, dz=5mm
Input Power = 20.0 dBm (100 mW)
SAR(1 g) = 3.93 mW/g; SAR(10 g) = 2.01 mW/g
Deviation = - 2.00%

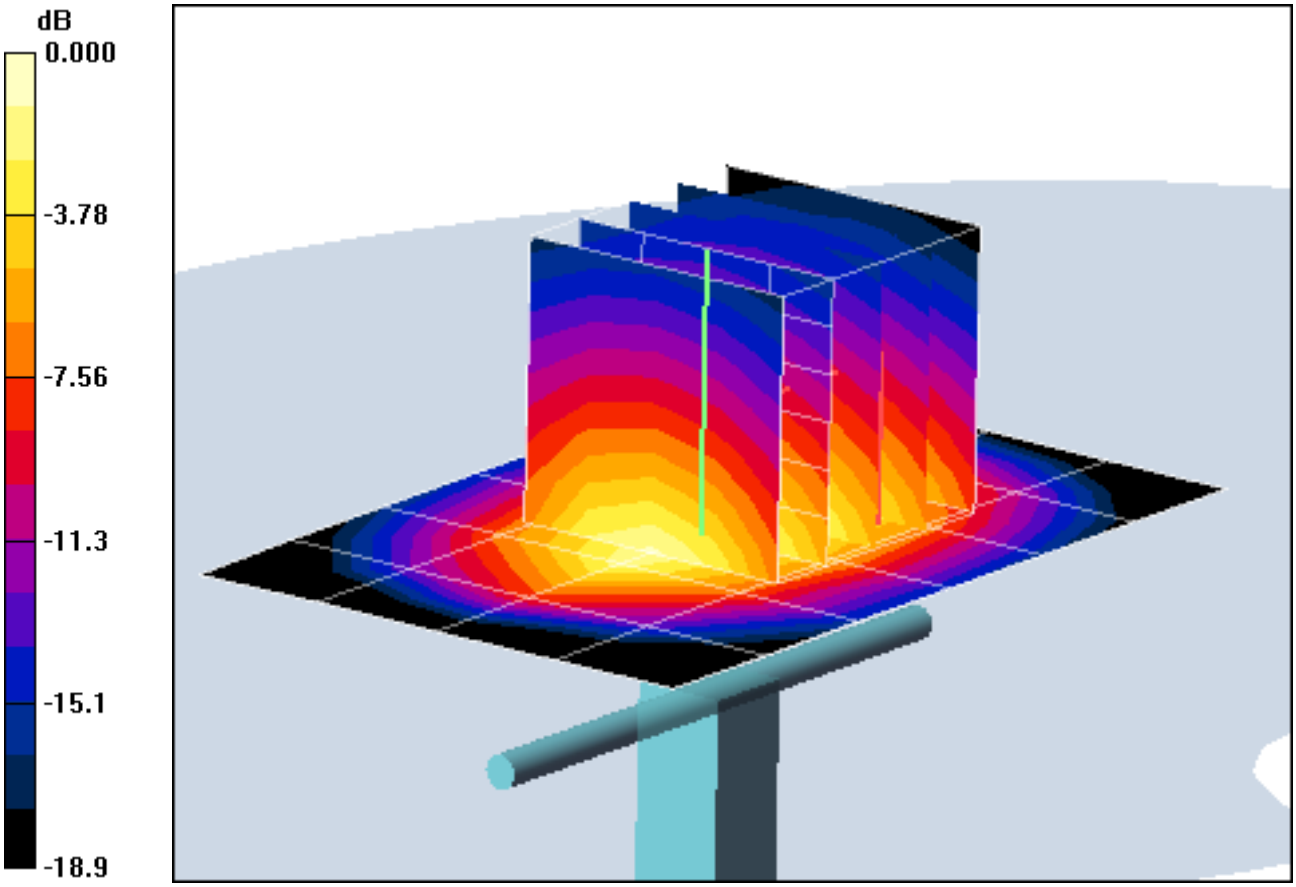

0 dB = 4.33mW/g

PCTEST ENGINEERING LABORATORY, INC.

DUT: SAR Dipole 1900 MHz; Type: D1900V2; Serial: 5d080

Communication System: CW; Frequency: 1900 MHz;Duty Cycle: 1:1
Medium: 1900 Body Medium parameters used (interpolated):
f = 1900 MHz; σ = 1.54 mho/m; ε_r = 53.5; ρ = 1000 kg/m^3
Phantom section: Flat Section; Space: 1.0 cm

Test Date: 12-21-2010; Ambient Temp: 23.2°C; Tissue Temp: 21.6°C

Probe: EX3DV4 - SN3550; ConvF(6.63, 6.63, 6.63); Calibrated: 1/26/2010
Sensor-Surface: 3mm (Mechanical Surface Detection)
Electronics: DAE4 Sn649; Calibrated: 1/22/2010
Phantom: SAM Sub; Type: SAM 4.0; Serial: TP-1357
Measurement SW: DASY4, V4.7 Build 80; Postprocessing SW: SEMCAD, V1.8 Build 186

1900MHz System Verification

Area Scan (5x7x1): Measurement grid: dx=15mm, dy=15mm
Zoom Scan (5x5x7)/Cube 0: Measurement grid: dx=8mm, dy=8mm, dz=5mm
Input Power = 16 dBm (40 mW)
SAR(1 g) = 1.56 mW/g; SAR(10 g) = 0.801 mW/g
Deviation = -3.70 %

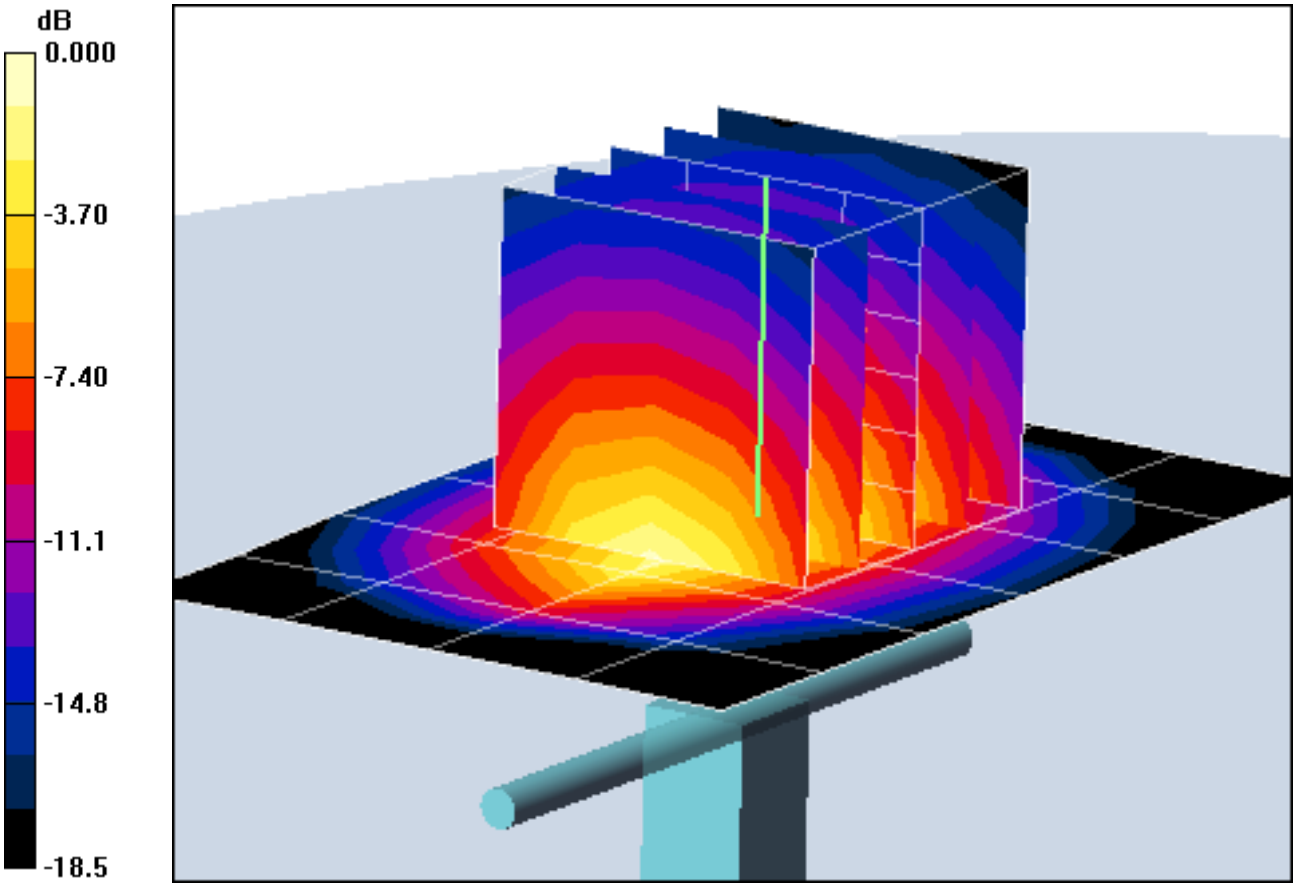

0 dB = 1.95mW/g

PCTEST ENGINEERING LABORATORY, INC.

DUT: SAR Dipole 2450 MHz; Type: D2450V2; Serial: 719

Communication System: CW; Frequency: 2450 MHz;Duty Cycle: 1:1
Medium: 2450 Body Medium parameters used:
f = 2450 MHz; σ = 1.92 mho/m; ε_r = 50.2; ρ = 1000 kg/m^3
Phantom section: Flat Section; Space: 1.0 cm

Test Date: 12-23-2010; Ambient Temp: 23.8 °C; Tissue Temp: 22.0 °C

Probe: ES3DV3 - SN3213; ConvF(4.27, 4.27, 4.27); Calibrated: 3/16/2010
Sensor-Surface: 3mm (Mechanical Surface Detection)
Electronics: DAE4 Sn704; Calibrated: 3/22/2010
Phantom: SAM Main; Type: SAM 4.0; Serial: TP-1406
Measurement SW: DASY4, V4.7 Build 80; Postprocessing SW: SEMCAD, V1.8 Build 186

2450MHz System Verification

Area Scan (5x7x1): Measurement grid: dx=15mm, dy=15mm
Zoom Scan (5x5x7)/Cube 0: Measurement grid: dx=8mm, dy=8mm, dz=5mm
Input Power = 14 dBm (25 mW)
SAR(1 g) = 1.36 mW/g; SAR(10 g) = 0.623 mW/g
Deviation = 5.84 %

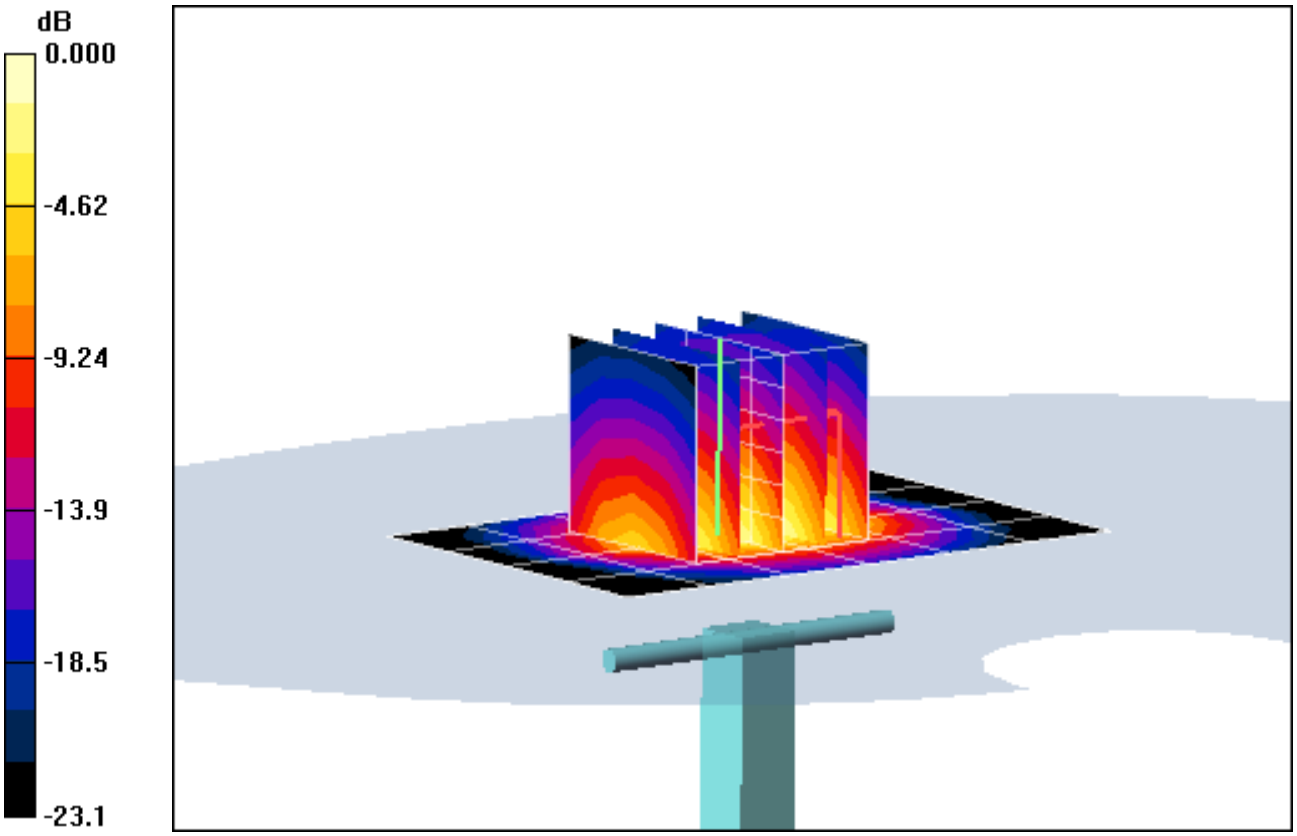

0 dB = 1.74mW/g

PCTEST ENGINEERING LABORATORY, INC.

DUT: SAR Dipole 2450 MHz; Type: D2450V2; Serial: 719

Communication System: CW; Frequency: 2450 MHz;Duty Cycle: 1:1
Medium: 2450 Head Medium parameters used:
f = 2450 MHz; σ = 1.88 mho/m; ε_r = 39.6; ρ = 1000 kg/m^3
Phantom section: Flat Section; Space: 1.0 cm

Test Date: 02-15-2011; Ambient Temp: 24.0 °C; Tissue Temp: 22.2 °C

Probe: EX3DV4 - SN3561; ConvF(6.11, 6.11, 6.11); Calibrated: 8/19/2010
Sensor-Surface: 3mm (Mechanical Surface Detection)
Electronics: DAE4 Sn665; Calibrated: 4/21/2010
Phantom: SAM with CRP; Type: SAM; Serial: TP1375
Measurement SW: DASY4, V4.7 Build 80; Postprocessing SW: SEMCAD, V1.8 Build 186

2450MHz System Verification

Area Scan (5x7x1): Measurement grid: dx=15mm, dy=15mm
Zoom Scan (5x5x7)/Cube 0: Measurement grid: dx=8mm, dy=8mm, dz=5mm
Input Power = 12.0 dBm (15.8 mW)
SAR(1 g) = 0.917 mW/g; SAR(10 g) = 0.417 mW/g
Deviation = 8.48 %

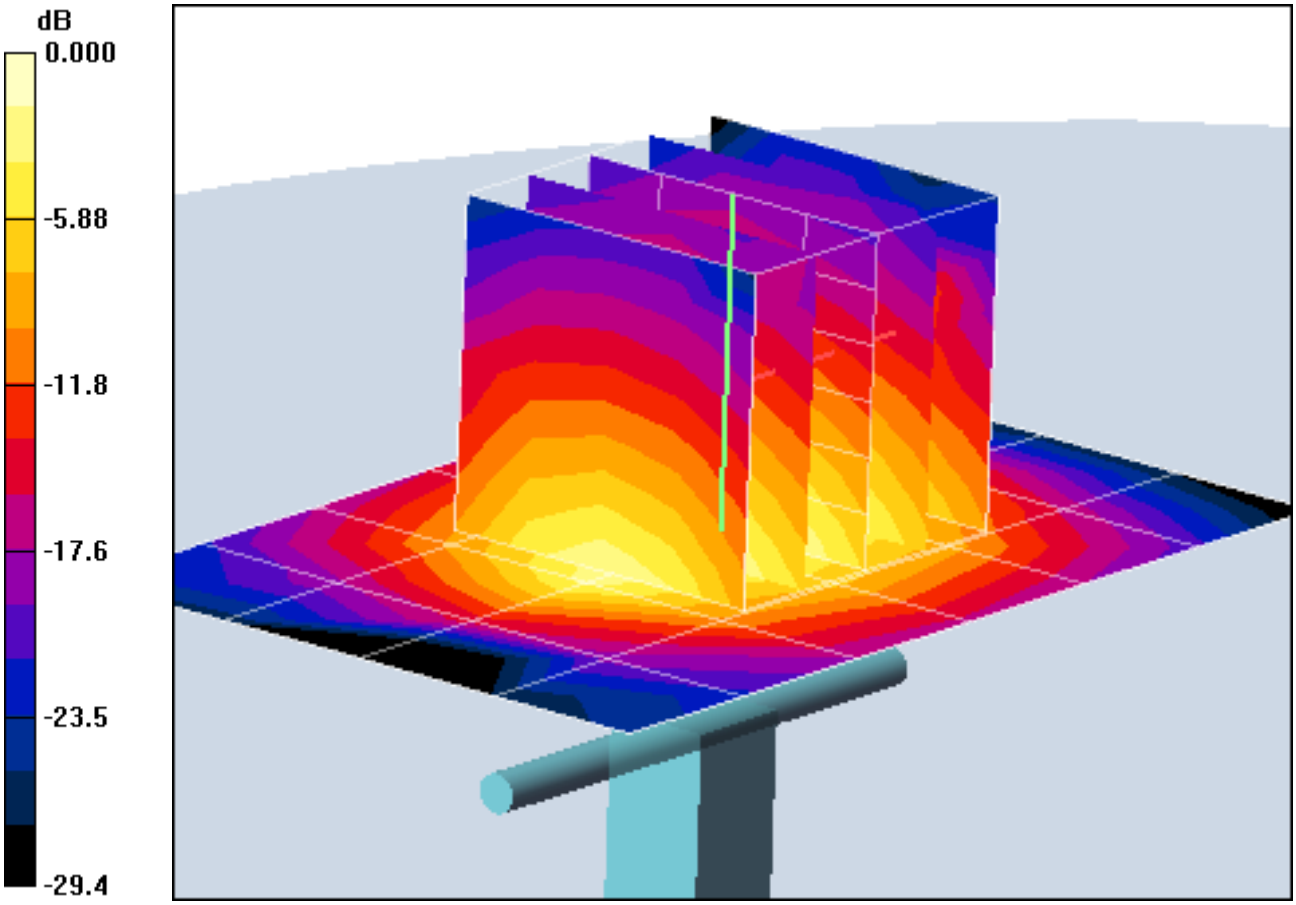

0 dB = 1.20mW/g