us_main.book.book Page 1 Monday, October 18, 2021 10:34 AM

LG
Life's Good

OWNER'S MANUAL

MICROWAVE OVEN

Read this owner's manual thoroughly before operating the appliance and keep it handy for reference at all times.

ENGLISH

MFL68927906
Rev.00_101821

www.lg.com

Copyright © 2021 LG Electronics Inc. All Rights Reserved.

us_main.book.book Page 2 Monday, October 18, 2021 10:34 AM

TABLE OF CONTENTS

3 IMPORTANT SAFETY INSTRUCTIONS

3 READ ALL INSTRUCTIONS BEFORE USE
3 WARNING

7 INSTALLATION

7 Product Overview
8 Installation Requirements

10 OPERATION

10 Control Panel
11 Before Use
13 Quick Start and Stop
13 Operating the Microwave
20 Operating the Oven
26 Cookware Guide
28 Cooking Guide

31 SMART FUNCTIONS

31 LG ThinQ Application
33 Smart Diagnosis™ Feature

34 MAINTENANCE

34 Cleaning
35 Replacing Parts

36 TROUBLESHOOTING

36 FAQs
38 Before Calling for Service

40 LIMITED WARRANTY

40 USA

PRECAUTIONS TO AVOID POSSIBLE EXPOSURE TO EXCESSIVE MICROWAVE ENERGY.

(a) Do not attempt to operate this oven with the door open since open-door operation can result in harmful exposure to microwave energy. It is important not to defeat or tamper with the safety interlocks.

(b) Do not place any object between the oven front face and the door or allow soil or cleaner residue to accumulate on sealing surfaces.

(c) Do not operate the oven if it is damaged. It is particularly important that the oven door closes properly and that there is no damage to the: (1) door (bent), (2) hinges and latches (broken or loosened), (3) door seals and sealing surfaces.

(d) The oven should not be adjusted or repaired by anyone except properly qualified service personnel.

us_main.book.book Page 3 Monday, October 18, 2021 10:34 AM

IMPORTANT SAFETY INSTRUCTIONS

READ ALL INSTRUCTIONS BEFORE USE

Safety Messages

Your safety and the safety of others are very important.

We have provided many important safety messages in this manual and on your appliance. Always read and follow all safety messages.

This is the safety alert symbol.

This symbol alerts you to potential hazards that can kill or injure you and others. All safety messages will follow the safety alert symbol and either the word WARNING or CAUTION.

These words mean:

WARNING

You may be killed or seriously injured if you do not follow instructions.

CAUTION

You may be injured or cause damage to the product if you do not follow instructions.

All safety messages will tell you what the potential hazard is, tell you how to reduce the chance of injury, and tell you what may happen if the instructions are not followed.

WARNING

WARNING

- To reduce the risk of explosion, fire, death, electric shock, injury or scalding to persons when using this product, follow basic precautions, including the following:

Technical Safety

- This appliance is not intended for use by persons (including children) with reduced physical, sensory or mental capabilities, or lack of experience and knowledge, unless they have been given supervision or instruction concerning use of the appliance by a person responsible for their safety. Children should be supervised to ensure that they do not play with the appliance.
- To reduce the risk of burns, electric shock, fire, injury to persons or exposure to excessive microwave energy when using the microwave oven, read all instructions before using the appliance.
- Children must not be allowed to play with accessories or hang down from the door or any part of the oven. Doing so can cause serious injury and damage. As with any appliance, close supervision is necessary when used by children.
- Read and follow the **PRECAUTIONS TO AVOID POSSIBLE EXPOSURE TO EXCESSIVE MICROWAVE ENERGY** found on page 2.
- This appliance must be grounded. Connect only to a properly grounded outlet. See the electrical **GROUNDING INSTRUCTIONS** section.
- Use this appliance only for its intended use as described in the manual. Do not use corrosive chemicals or vapors in this appliance. This type of oven is specifically designed to heat, cook, or dry food. It is not designed for industrial or laboratory use.
- To avoid electric shock:
  - Do not operate this appliance if it has a damaged cord or plug, if it is not working properly or if it has been damaged or dropped.

us_main.book.book Page 4 Monday, October 18, 2021 10:34 AM

- Do not immerse cord or plug in water. Keep cord away from heated surfaces.
- Do not let cord hang over edge of table or counter.

• To reduce the risk of fire in the oven cavity:
  - Do not overcook food. Carefully attend appliance when paper, plastic, or other combustible materials are placed inside the oven to facilitate cooking.
  - Remove wire twist-ties from paper or plastic bags before placing bag in oven.
  - If materials inside the oven ignite, keep oven door closed, turn oven off, and disconnect the power cord, or shut off power at the fuse or circuit breaker panel.
  - Do not use the cavity for storage purposes. Do not leave paper products, cooking utensils, or food in the cavity when not in use.
• Install or locate this appliance only in accordance with the provided installation instructions.
• Some products such as whole eggs and sealed containers – for example, closed glass jars – are able to explode and should not be heated in this oven.
• Liquids, such as water, coffee, or tea are able to be overheated beyond the boiling point without appearing to be boiling. Visible bubbling or boiling when the container is removed from the microwave oven is not always present.
• **THIS COULD RESULT IN VERY HOT LIQUIDS SUDDENLY BOILING OVER WHEN THE CONTAINER IS DISTURBED OR A SPOON OR OTHER UTENSIL IS INSERTED INTO THE LIQUID.**

  To reduce the risk of injury to persons:
  - Do not overheat the liquid. Stir the liquid both before and halfway through heating it.
  - Do not use straight-sided containers with narrow necks. Use extreme care when inserting a spoon or other utensil into the container.
  - After heating, allow the container to stand in the microwave oven for a short time before removing the container.
• Do not cover or block any openings on the appliance.
• Do not store this appliance outdoors. Do not use this product near water - for example, near a kitchen sink, in a wet basement, near a swimming pool, or similar locations.
• This appliance should be serviced only by qualified service personnel. Contact the nearest authorized service facility for examination, repair, or adjustment.
• When cleaning surfaces of door and oven that comes together on closing the door, use only mild, nonabrasive soaps or detergents applied with a sponge or soft cloth.

Operation

• Do not use this oven for commercial purposes. It is made for household use only.
• Do not run the oven while it is empty.
• If your oven is dropped or damaged, have it thoroughly checked by a qualified service technician before using it again.
• Take care when the door is opened to avoid injury.
• To avoid improperly cooking some foods:
  - Do not heat any type of baby bottle or baby food. Uneven heating may occur and possibly cause personal injury.
  - Do not heat small-necked containers, such as syrup bottles.
  - Do not deep-fat fry in the microwave oven.
  - Do not attempt home canning in the microwave oven.
• Do not use the oven for the purpose of dehumidification (for example, operating the microwave oven with wet newspapers, clothes, toys, electric devices, plants, soil, pets or any other living matter inside it). The oven must only be used for heating or cooking food. The results of misuse can include safety risks such as fire, burns, or death due to electric shock.

us_main.book.book Page 5 Monday, October 18, 2021 10:34 AM

- During use the appliance becomes hot. Care should be taken to avoid touching heating elements inside the oven.
- The appliance and its accessible parts become hot during use. Care should be taken to avoid touching heating elements. Children must be kept away unless continuously supervised.
- Do not use recycled paper products. They may contain impurities which may cause sparks and/or fires when used in cooking.
- The door or the outer surface may get hot when the appliance is operating.
- Liquids heated in certain shaped containers (especially cylindrical-shaped containers) may become overheated. The liquid may splash out with a loud noise during or after heating or when adding ingredients (instant coffee, etc.), resulting in harm to the oven and possible injury. In all containers, for best results, stir the liquid several times before heating. Always stir liquid several times between reheatings.

Maintenance

- If the door or door seals are damaged, the oven must not be operated until it has been repaired by an authorized service person.
- The oven should be cleaned regularly and any food deposits should be removed. Failure to maintain the oven in a clean condition could lead to deterioration of the surface that could adversely affect the life of the appliance and possibly result in a hazardous situation.
- Do not rinse trays and racks by placing them in water immediately after cooking. This may cause breakage or damage. Improper use could result in damage to the oven.

Microwave Oven

- Must be installed following the provided installation instructions.
- Secure the cord in the cabinet above the oven.
- Do not tamper with the built-in safety switches on the oven door. The oven has several built-in safety switches to make sure the power is off when the door is open.
- Preserve the oven floor:
  - Do not heat the oven floor excessively.
  - Do not allow the gray film on special microwave-cooking packages to touch the oven floor. Put the package on a microwavable dish.
  - Do not cook anything directly on the oven floor or turntable. Use a microwavable dish.
- Keep a browning dish at least 3/16 inch above the oven floor. Carefully read and follow the instructions for the browning dish. If you use a browning dish incorrectly, you could damage the oven floor.

Combination

- Oversized food or oversized metal utensils should not be inserted in a microwave oven as they may create a fire or risk of electric shock.
- Do not clean with metal scouring pads. Pieces can burn off the pad and touch electrical parts involving a risk of electric shock.
- Do not store any materials, other than manufacturer’s recommended accessories, in this oven when not in use.
- Do not cover racks or any other part of the oven with metal foil. This will cause overheating of the oven.

us_main.book.book Page 6 Monday, October 18, 2021 10:34 AM

Ventilation

- Burn Hazard: If a range or cooktop located below the microwave is operating, use caution when operating the microwave. **External components of the microwave may become very hot and cause burns or other injury if touched**.
- Clean Ventilating Hoods Frequently – Grease should not be allowed to accumulate on hood or filter.
- When flaming foods under the hood, turn the fan on.
- Use care when cleaning the vent-hood filter. Corrosive cleaning agents, such as lye-based oven cleaners, may damage the filter.
- Suitable for use above both gas and electric cooking equipment 36 inches wide or less.

Radio/TV/Wireless Equipment Interference

- Operating the microwave oven near equipment-such as a radio, TV, wireless LAN, Bluetooth devices, medical equipment, or wireless equipment-which uses the same frequency, may cause interference. This interference is not an indication of a defect in the product or its operation. The product is safe to use.
- Do not use medical equipment near the microwave oven, as the interference could affect the medical equipment's operation.
- When there is interference, it may be reduced or eliminated by taking the following measures:
  - Clean the door and the sealing surfaces of the oven.
  - Reorient the receiving antenna of the radio, TV, Bluetooth, or other equipment.
  - Relocate the microwave oven in relation to the radio, TV, Bluetooth, or other equipment.
  - Move the microwave oven away from the receiver.
  - Plug the microwave oven into a different outlet so that the microwave oven and receiver are on different branch circuits

FEDERAL COMMUNICATIONS COMMISSION RADIO FREQUENCY INTERFERENCE STATEMENT (U.S.A. ONLY)

- This equipment generates and uses ISM frequency energy and if not installed and used properly, that is in strict accordance with the manufacturer's instructions, may cause interference to radio and television reception. It has been type tested and found to comply with limits for ISM Equipment pursuant to part 18 of FCC Rules, which are designed to provide reasonable protection against such interference in a residential installation. However, there is no guarantee that interference will not occur in a particular installation. If this equipment does cause interference to radio or television reception, which can be determined by turning the equipment off and on, the user is encouraged to try to correct the interference by one or more of the following:
  - Reorient the receiving antenna of the radio or television.
  - Relocate the microwave oven with respect to the receiver.
  - Move the microwave oven away from the receiver.
  - Plug the microwave oven into a different outlet so that the microwave oven and the receiver are on different branch circuits.
- The manufacturer is not responsible for any radio or TV interference caused by unauthorized modification to this microwave oven. It is the responsibility of the user to correct such interference.

SAVE THESE INSTRUCTIONS

us_main.book.book Page 7 Monday, October 18, 2021 10:34 AM

INSTALLATION

Product Overview

Front View

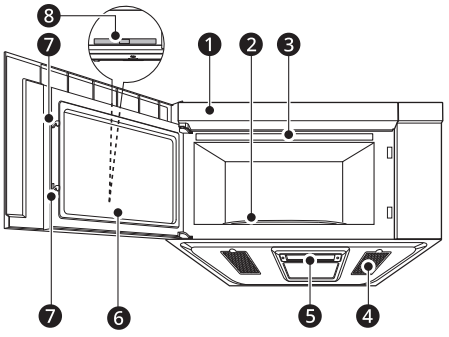

❶ Vent Grille

❷ Glass Turntable

❸ Location of Model Number

❹ Grease Filter

❺ Cooktop Light

❻ Window with Metal Shield

❼ Safety Door Lock System

❽ Control Panel

Accessories

Accessories will vary depending on the model purchased.

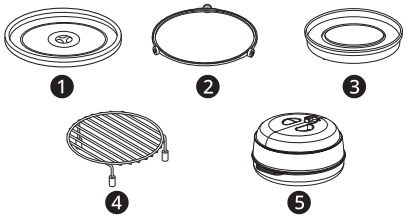

❶ Glass Tray

❷ Rotating Ring

❸ Metal Tray

❹ Metal Rack

❺ Steam Bowl

⚠ WARNING

- Do not operate the oven when it is empty or without the glass tray. It is best to leave a glass of water in the oven when not in use. The water will safely absorb all microwave energy, if the oven is accidentally started.

⚠ CAUTION

- To avoid risk of personal injury or property damage, do not use stoneware, metal cookware, or metal rimmed cookware in the oven.
- Keep aluminum foil at least 1 inch from the oven walls, metal rack and other pieces of foil. Foil can cause arcing if it gets too close to the oven walls during cooking.

NOTE

- Use the rack for extra space when cooking in more than one container at the same time. Remove the cooking rack when you are not using it.
- This microwave oven is designed for household use only. It is not recommended for commercial use.
- Do not overcook food. The microwave oven can be damaged.
- A beep sounds each time you press a key. A melody signals the end of a timer or a cooking cycle.

us_main.book.book Page 8 Monday, October 18, 2021 10:34 AM

How to Use Accessories

	Microwave	Convection	Combination
	○	△	△
	-	△	△
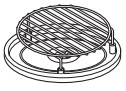	-	○	○
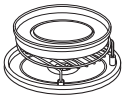	-	○	-
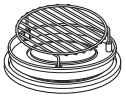	-	○	○
	○	-	-
Mode	Auto Defrost, Sensor Cook Sensor Reheat, Steam Cook Popcorn, Soften, Melt Kids Meal, Simmer	Convection Bake, Air Fry Warm, Proof, Dehydrate	Combination Bake Combination Roast Speed Combination

○: Recommended method

△: Alternate method

-: Do not use

NOTE

- Do not operate the oven when it is empty except when preheating in the convection mode only. Never operate the microwave while the oven is empty.

Specifications

MHES173XX, MHEC173XX Model

- **Power Supply**: 120 V AC, 60 Hz
- **Rated Power Consumption**: 1700 W (Microwave oven with cooktop lamp and ventilation fan)
- **Microwave Output**: Max. 950 W†
- **Rated Current**: 14.5 A
- **Dimensions (W x H x D)**: 29 14/16 x 16 1/2 x 16 3/8 inches
- **Dimensions of Oven Cavity (W x H x D)**: 21 5/8 x 9 3/4 x 14 1/4 inches
- **Capacity of Oven Cavity**: 1.7 cu.ft.
- **Net Weight**
  - **MHES173XX Model**: 72.3 lbs.
  - **MHEC173XX Model**: 72.3 lbs.

† IEC 60705 RATING STANDARD. Specifications are subject to change without prior notice.

Installation Requirements

Installation Location

Make sure you have enough space and support.

us_main.book.book Page 9 Monday, October 18, 2021 10:34 AM

- Mount the oven against a flat, vertical wall, so it is supported by the wall. The wall should be constructed of a minimum of 2" x 4" wood studding and 3/8" thick drywall or plaster/lath.
- Attach the 2 lag screws supporting the oven to a vertical, 2" x 4" wall stud.
- DO NOT mount the microwave oven to an island or peninsula cabinet.
- Be sure that the upper cabinet and rear wall structures can support 150 lb. plus the weight of any items you place inside the oven or upper cabinet.
- Locate the oven away from areas with strong drafts, such as near windows, doors, and large heating vents.
- Make sure that you have enough space. See the clearance diagrams in the installation manual for the minimum vertical and horizontal clearances.
- Refer to the **Installation Instructions** for details.

Electrical Requirements

The oven is designed to operate on a standard 120 V/60 Hz household outlet. Be sure that the circuit is at least 15 A or 20 A and the microwave oven is the only appliance on the circuit. It is not designed for 50 Hz or any circuit other than a 120 V/60 Hz circuit. No other electrical appliances or lighting circuits should be on this line. If in doubt, consult a licensed electrician.

Voltage Warning

The voltage used at the wall socket must be the same as specified on the oven name plate located on the back or on the side of the control panel of the oven. Using a higher voltage is dangerous and may result in a fire or other type of accident causing oven damage. Low voltage will cause slow cooking. If the microwave oven does not perform normally in spite of proper voltage, unplug and reconnect the power cord.

Do Not Block Air Vents

All air vents should be kept clear during cooking. If air vents are covered during oven operation the oven may overheat. To prevent damage to the oven, a sensitive safety device detects overheating and automatically turns the oven off. The oven cannot be used until it has cooled sufficiently.

Grounding Instructions

This appliance must be grounded. In the event of an electrical short circuit, grounding reduces the risk of electric shock by providing an escape wire for the electric current. This appliance is equipped with a cord having a grounding wire with a grounding plug. The plug must be plugged into an outlet that is properly installed and grounded.

- Consult a qualified electrician or service person if the grounding instructions are not completely understood, or if doubt exists as to whether the appliance is properly grounded.
  - Do not use an extension cord. If the power supply cord is too short, have a qualified electrician or serviceman install an outlet near the appliance.
- Ensure that the product is properly grounded before use.

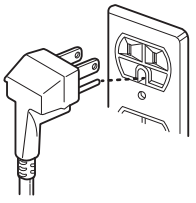

- Keep the electrical power cord dry and do not pinch or crush it in any way.
- For a permanently connected appliance:

  This appliance must be connected to a grounded, metallic, permanent wiring system, or an equipment grounding conductor should be run with the circuit conductors and connected to the equipment grounding terminal or lead on the appliance.

⚠ WARNING

- Improper use of the grounding can result in a risk of electric shock.
- Do not use extension cord. If the power supply cord is too short, have a qualified electrician or service man install an outlet near the appliance.
- A short power supply cord is provided to reduce the risks resulting from becoming entangled in or tripping over a longer cord.

NOTE

- Because this appliance fits under the cabinet, it has a short power supply cord. See the separate installation instructions for directions on properly placing the cord.

us_main.book.book Page 10 Monday, October 18, 2021 10:34 AM

OPERATION

Control Panel

Control Panel Features

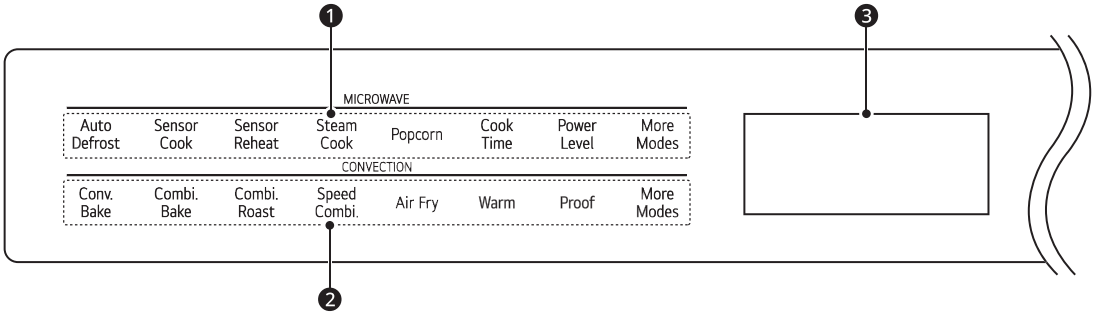

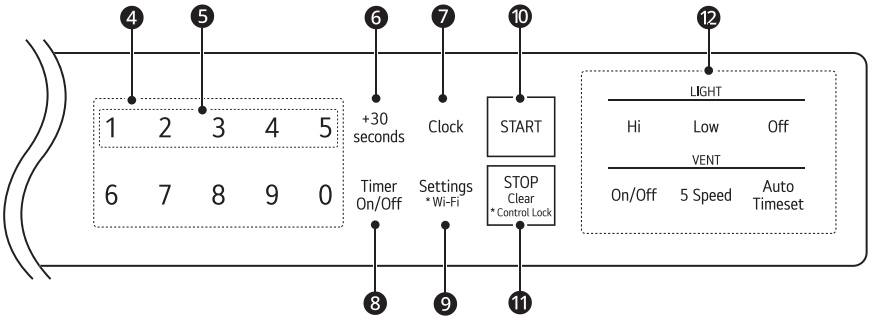

❶ **MICROWAVE**

- Select various microwave cooking functions. See **Manual Cooking** section and **Cooking Mode** section.

❷ **CONVECTION**

- Select various convection cooking functions. See **Cooking Mode** section.

❸ **Display**

- Shows the time of day, cook time settings, and selected cooking functions.

❹ **Number Keys**

- Set cooking time, power level or temperature, quantity or weight.

❺ **Number Keys 1-5 (Express Cook)**

- Start the microwave function without pressing the **START** button.
- Press **3** to cook for 3 minutes at high.

❻ **+30 seconds**

- Start cooking without pressing the **START** button.
- Press **+30 seconds** to cook for 30 seconds at high.
- Press **+30 seconds** during cooking to increase the cook time by 30 seconds. (Add up to 99 minutes and 59 seconds)

❼ **Clock**

- Set the time of day.

❽ **Timer On/Off**

- Use your microwave oven as a kitchen timer.

❾ **Settings**

- Use to change the default setting for sound, clock, display speed, defrost weight and turntable.

Wi-Fi

- Press and hold **Settings** for 3 seconds to connect the Wi-Fi network.

❿ **START**

- Start the oven or enter amounts.

⓫ **STOP/Clear**

- Stop the oven or clear all entries.

us_main.book.book Page 11 Monday, October 18, 2021 10:34 AM

Control Lock

- Press and hold **STOP/Clear** for 3 seconds to lock the control panel.

⓬ Light and Vent Functions

- Set the light. press **Hi**, **Low**, or **Off** to adjust the cooktop light.
- Set the ventilation.
  - Press **On/Off** to turn the vent fan on or off.
  - Press **5 Speed** to set the vent fan speed.
  - Press **Auto Timeset** to set ventilation time. (1, 3, 5, 10, and 30 minutes)

Control Panel Light On/Off (Only MHES173XX model)

The LEDs on the control panel turn off after a few minutes to save energy. Press any key to activate the control panel. If the controls are idle for a few minutes, the LEDs will turn off again automatically.

Before Use

Setting the Clock

Set the current time to operate the microwave oven.

1 Press **STOP/Clear** and press **Clock**.

2 Press the number keys to set the correct time of day, and press **START**.

3 Press **1** to select AM, or **2** to select PM.

4 Press **START**.

NOTE

- To reset the clock mode, unplug the power cord and plug it back in.

Child Lock

Use this safety feature to lock the control panel before cleaning the oven or to prevent children from unsupervised use of the oven.

Setting Child Lock to ON

1 Press **STOP/Clear**.

2 Press and hold **STOP/Clear** until **LOCKED** appears in the display (approximately 3 seconds).

Canceling Child Lock

Press and hold **STOP/Clear** until **LOCKED** disappears in the display (approximately 3 seconds).

NOTE

- If the oven is locked, **LOCKED** appears in the display when any key is pressed.
- Unlock the oven to resume normal use.

Kitchen Timer

The Timer function serves as an extra kitchen timer up to 99 minutes, 99 seconds. It chimes when the set time runs out. It does not start or stop cooking.

Setting Timer for 3 Minutes

1 Press **Timer On/Off**.

2 Press the number keys to set the time (**3**, **0**, and **0**), and press **Timer On/Off**.
- The timer starts immediately and the time counts down in the display.

3 To cancel the timer, press **Timer On/Off**.

NOTE

- When the time is over, the oven beeps continuously until you press **Timer On/Off**.

Setting the Cooktop Light

Use the Light settings to adjust the light for the cooktop below the microwave.

1 Press **Hi** to set the light to high.

2 Press **Low** to set the light to low.

3 Press **Off** to turn the light off.

us_main.book.book Page 12 Monday, October 18, 2021 10:34 AM

Setting Ventilation Functions

Use this button to set the vent fan speed. The vent removes steam and other vapors from the cooking surface.

Turning the Vent Fan On or Off

1 Press **On/Off** once to turn the vent fan on.

2 Press **On/Off** again to turn the vent fan off.

Setting the Vent Fan Speed

When the fan is on, press **5 Speed** to change the vent fan speed.

- The fan speed will change in sequence from Level 4 to Level 5, Level 1, Level 2, Level 3 and back to Level 4.
- When the Vent Fan is turned off and on again, the level at which it was turned off operates.

Setting the Timed Ventilation

Press **Auto Timeset** to set the ventilation time.

- The ventilation time will change in sequence from 1 to 3, 5, 10, and 30 minutes.

NOTE

- Turn the microwave's vent fan on whenever you use the oven range cooktop below it. The fan captures smoke, steam, and odors and also prevents the heat from the cooktop from damaging microwave components.
- If the microwave is cooking, the vent fan turns on automatically if the sensors detect too much heat from the cooktop. This is designed to prevent microwave component damage.

Custom Setting

Set the default values for beep sound, clock, display speed, defrost weight and turntable.

Setting Menu

Refer to the information below to adjust the settings.

Item	Option
1 Sound	• **1 Sound On** • **2 Sound Off**
2 Clock	• **1 Clock On** • **2 Clock Off**
3 Scroll Speed	• **1 Slow** • **2 Normal** • **3 Fast**
4 Defrost Weight	• **1 Lbs** • **2 Kg**
5 Turntable	• **Turntable On** • **Turntable Off**

Setting the Defrost Weight from Lbs to Kg

1 Press **Settings**.

2 Use the number keys to select **4** and **2**.

Microwave Power Levels

This microwave oven is equipped with 10 power levels to give you maximum flexibility and control over cooking.

- When operating at 100% power levels for prolonged periods, the output power will be reduced gradually to help prevent the unit from electrically overheating.

Power Level	Use
High 10 (100 %)	• Boiling water. • Browning ground beef. • Making candy. • Cooking poultry pieces, fish & vegetables. • Cooking tender cuts of meat.
9 (90%)	• Reheating rice, pasta & vegetables.
8 (80%)	• Reheating prepared foods quickly. • Reheating sandwiches.
7 (70%)	• Cooking egg, milk and cheese dishes. • Melting chocolate.
6 (60%)	• Cooking veal. • Cooking whole fish. • Cooking puddings and custard.
5 (50%)	• Cooking ham, whole poultry and lamb. • Cooking rib roast and sirloin tip.

us_main.book.book Page 13 Monday, October 18, 2021 10:34 AM

Power Level	Use
4 (40%)	• Thawing meat, poultry and seafood.
3 (30%)	• Cooking less tender cuts of meat. • Cooking pork chops and roasts.
2 (20%)	• Taking the chill out of fruit. • Softening butter.
1 (10%)	• Keeping casseroles and main dishes warm. • Softening butter and cream cheese.
0 (0%)	• Standing time

Wi-Fi

Connect the appliance to a home Wi-Fi network to use smart functions. See **SMART FUNCTIONS** for more details.

Setting Up Wi-Fi

1 Press and hold the **Wi-Fi** button for three seconds. The Wi-Fi icon appears at the top of the display.

2 Follow the instructions in the **LG ThinQ** application.

NOTE

- The Wi-Fi icon on the display shows the status of the appliance's network connection. If the Wi-Fi icon is not shown, use the smart phone app to select the Wi-Fi network or register the product again.

Quick Start and Stop

Using Quick Start

This feature allows you to start the microwave function without pressing the **START** button.

Cooking for 2 Minutes on High Power

Press **+30 seconds** four times.

- The oven starts immediately and the time counts down in the display.
- Press **+30 seconds** repeatedly to extend the cook time by 30 seconds every time the button is pressed (up to 99 min 59 seconds).

Interrupting Cooking

- To stop the oven during a cycle, open the door or Press **STOP/Clear** once.
- To restart cooking, close the door and press **START**.
- To clear the oven during a cycle, press **STOP/ Clear** twice.

Operating the Microwave

Microwave Mode

Unless you are using the auto cooking functions, the cook time and power level must be set manually.

Cooking for 5 Minutes, 30 Seconds at 80% Power

1 Press **Cook Time**.

2 Press the number keys to set the cook time (**5:30**).

3 Press **Power Level**.

4 Press **8** to select power level 8, and press **START**.

- When cooking is complete, a chime sounds and **COOK END** appears in the display window.

NOTE

- If a power level is not selected, the oven defaults to 100% power.

Using Express Cook

Press the **1** through **5** number buttons to immediately start the microwave function on High for the selected number of minutes.

Cooking for 3 Minutes at High

1 Press **3** to start cooking.

- When cooking is complete, a chime sounds and **COOK END** appears in the display window.

us_main.book.book Page 14 Monday, October 18, 2021 10:34 AM

Using the Sensor Functions

The sensor features offer convenient cooking or reheating of popular food items automatically using preprogrammed settings.

The Sensor system works by detecting built up steam so there is no need to set cook times or power levels.

- Make sure the door remains closed.
- Opening the door or pressing the **STOP/Clear** button before the steam is detected will stop the process and the oven.
- Appropriate containers and coverings help assure good sensor cooking results.
  - Always use microwavable containers and cover them with lids or vented plastic wrap.
  - Never use tight-sealing plastic covers. They can prevent steam from escaping and cause food to overcook.
  - Match the amount to the size of the container.
  - Fill containers at least half full for best results.
  - Be sure the outside of the cooking container and the inside of the microwave oven are dry before placing food in the oven. Beads of moisture turning into steam can mislead the sensor.

Sensor Cook Mode

Cook your favorite foods automatically using preset programs.

1 Press **Sensor Cook**.

2 Use the number keys to enter the desired menu code from the **Sensor Cook Menu**.
- Cooking will start about 4 seconds later.
- When the cook time ends, a melody sounds and **COOK END** appears in the display.

Sensor Cook Menu

Refer to the information below to set the desired menu item and see the recommended amounts.

- **1 Potato** (1 - 4 potatoes (7 - 9 oz/ea))
  - Cookware: Paper towel
  - Food temperature: Room
  - Instructions: Pierce skin with a fork and place on paper towel. Do not cover. After cooking, let stand for 5 minutes.
- **2 Fresh Vegetable - Hard** (1 - 4 cups)
  - Cookware: Microwave-safe bowl
  - Food temperature: Refrigerated
  - Instructions: Add water (1 - 2 cups: 2 tbsp water, 3 - 4 cups: 4 tbsp water). Cover with vented plastic wrap. After cooking, let stand for 3 minutes.
- **3 Fresh Vegetable - Soft** (1 - 4 cups)
  - Cookware: Microwave-safe bowl
  - Food temperature: Refrigerated
  - Instructions: Add water (1 - 2 cups: 2 tbsp water, 3 - 4 cups: 4 tbsp water). Cover with vented plastic wrap. After cooking, let stand for 3 minutes.
- **4 Frozen Vegetable** (1 - 4 cups)
  - Cookware: Microwave-safe bowl
  - Food temperature: Frozen
  - Instructions: Add water (1-2 cups: 2 tbsp water, 3-4 cups: 4 tbsp water). Cover with vented plastic wrap. After cooking, let stand for 3 minutes.
- **5 Canned Vegetable** (1 - 4 cups)
  - Cookware: Microwave-safe bowl
  - Food temperature: Room
  - Instructions: Cover with vented plastic wrap. After cooking, stir and let stand for 3 minutes.
- **6 Rice** (0.5 - 2 cups)
  - Cookware: Deep and large microwave-safe bowl
  - Food temperature: Room
  - Instructions: Place rice in bowl. and add at least twice as much water as rice. Cover with vented plastic wrap. After cooking, let stand for 5-10 minutes. Drain any remaining water.
- **7 Frozen Lasagna** (10 - 21 oz)
  - Food temperature: Frozen
  - Instructions: Remove outer packaging. Slit cover. If not in a microwave-safe container, transfer it to a microwave-safe plate covered with vented plastic wrap. After cooking, let stand in microwave oven for 3 minutes.
- **8 Fish Fillets** (4 - 16 oz)
  - Cookware: Microwave-safe plate
  - Food temperature: Refrigerated
  - Instructions: Cover with vented plastic wrap. After cooking, let stand for 5 minutes.
- **9 Shrimp** (4 - 16 oz)
  - Cookware: Microwave-safe plate
  - Food temperature: Refrigerated
  - Instructions: Cover with vented plastic wrap. After cooking, let stand for 2 minutes.

us_main.book.book Page 15 Monday, October 18, 2021 10:34 AM

- **10 Chicken Pieces** (4 - 32 oz)
  - Cookware: Microwave-safe plate
  - Food temperature: Refrigerated
  - Instructions: Cover with vented plastic wrap. After cooking, let stand for 3 minutes.
- **11 Casserole** (1 - 4 cups)
  - Cookware: Microwave-safe bowl
  - Food temperature: Room
  - Instructions: Cover with vented plastic wrap. After cooking, let stand for 3 minutes.
- **12 Boiling Water** (1 - 2 cups (240 ml/cup))
  - Cookware: Microwave-safe cup
  - Food temperature: Room
  - Instructions: After cooking, stir to complete reheating.

WARNING

- Be careful when handling the container. Microwave heating of beverages can result in delayed eruptive boiling. Therefore, care must be taken when handling the container.

Sensor Reheat Mode

This feature reheats single servings of previously cooked foods or a plate of leftovers.

1 Press **Sensor Reheat**.

2 Use the number keys to enter the desired menu code from the **Sensor Reheat Menu**.
   - Cooking will start about 4 seconds later.
   - When the cook time ends, a melody sounds and **COOK END** appears in the display.

NOTE

- Do not use recycled paper products in the microwave oven. They sometimes contain impurities that cause arcing and sparking.

Sensor Reheat Menu

Refer to the information below to set the desired menu item and see the recommended amounts.

- **1 Dinner Plate** (1 - 2 servings)
  - Cookware: Microwave-safe plate
  - Food temperature: Refrigerated
  - Instructions: Cover with lid or vented plastic wrap. After cooking, let stand for 3 minutes.
- **2 Soup / Sauce** (1 - 4 cups)
  - Cookware: Microwave-safe bowl
  - Food temperature: Refrigerated
  - Instructions: Cover with vented plastic wrap. After cooking, stir and let stand for 3 minutes.
- **3 Casserole** (10 - 20 oz)
  - Cookware: Microwave-safe bowl
  - Food temperature: Refrigerated
  - Instructions: Cover with vented plastic wrap. After cooking, let stand for 3 minutes.
- **4 Pizza** (1 - 3 slices)
  - Cookware: Microwave-safe dish
  - Food temperature: Refrigerated
  - Instructions: Unwrap and place food on a microwave-safe dish.
- **5 Baked Goods** (1 - 4 pieces)
  - Cookware: Paper towel
  - Food temperature: Room
  - Instructions: Place on paper towel. Do not cover.
- **6 Beverage** (1 - 2 cups (240 ml per cup))
  - Cookware: Microwave-safe cup
  - Food temperature: Room
  - Instructions: Pour beverage into a mug or microwave-safe cup. After cooking, stir to complete reheating.

WARNING

- Be careful when handling the container. Microwave heating of beverages can result in delayed eruptive boiling. Therefore, care must be taken when handling the container.

Popcorn Mode

Prepare microwave popcorn simply and easily, one bag at a time.

- Press **Popcorn**.
  - Cooking will start about 4 seconds later.
  - When the cook time ends, a melody sounds and **COOK END** appears in the display.

CAUTION

- Only pop popcorn in a microwavable container or in commercial packages designed for microwave ovens.
- Do not reuse popcorn bags.

us_main.book.book Page 16 Monday, October 18, 2021 10:34 AM

CAUTION

- Do not leave microwave unattended while popping corn.
- Follow directions on bag.
- When popping commercially packaged popcorn, remove the rack from the oven.
- Do not place the bag of microwave popcorn on the rack or under the rack.

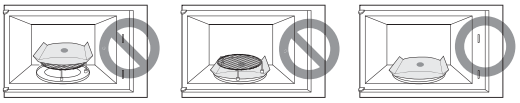

Popcorn Menu

Refer to the information below to set the desired menu item and see the recommended amounts.

- **Pop Popcorn** (2.0 - 3.5 oz)
  - Pop only one package at a time. For best results, use a fresh bag of popcorn. Place a bag of prepackaged microwave popcorn on the center of the glass tray.

Steam Cook Mode

This feature cooks with steam using a steam bowl.

1. Press **Steam Cook**.
2. Use the number keys to enter the desired menu code from the **Steam Cook Menu**.
3. Use the number keys to enter the desired amounts from the **Steam Cook Menu**.
4. Press **START**.
   - When the cook time ends, a melody sounds and **COOK END** appears in the display.

Steam Cook Menu

- **1 Asparagus** (1 - 3 cups)
  - Cookware: Steam bowl
  - Food temperature: Refrigerated
  - Instructions: Wash vegetables and cut into similar sized pieces (under 1 in./2.5 cm long). Pour 10 oz (300 ml) tap water into the steam water bowl. Place the steam plate on the steam water bowl. Place prepared food on the steam plate in a single layer. Cover with the steam cover.
- **2 Broccoli** (1 - 3 cups)
  - Cookware: Steam bowl
  - Food temperature: Refrigerated
  - Instructions: Wash vegetables and cut into similar sized pieces (small florets, 1 in. or 20-25 g per piece). Follow the instructions under Asparagus for adding water and using the steam bowl.
- **3 Brussels Sprouts** (1 - 3 cups)
  - Cookware: Steam bowl
  - Food temperature: Refrigerated
  - Instructions: Wash vegetables and cut into similar sized pieces. Follow the instructions under Asparagus for adding water and using the steam bowl.
- **4 Carrot** (1 - 3 cups)
  - Cookware: Steam bowl
  - Food temperature: Refrigerated
  - Instructions: Wash vegetables and cut into similar sized pieces (under 1/4 in. or 5 mm thick). Follow the instructions under Asparagus for adding water and using the steam bowl.
- **5 Chicken Breast** (1 - 2 pieces, 6 - 8 oz/piece)
  - Cookware: Steam bowl
  - Food temperature: Refrigerated
  - Instructions: Wash the food and season as desired (under 1 in. or 2.5 cm thick). Follow the instructions under Asparagus for adding water and using the steam bowl.
- **6 Fish** (1 - 2 pieces, 1”/fillet)
  - Cookware: Steam bowl
  - Food temperature: Refrigerated
  - Instructions: Wash the food and season as desired (under 1 in. or 2.5 cm thick). Follow the instructions under Asparagus for adding water and using the steam bowl.
- **7 Zucchini** (1 - 3 cups)
  - Cookware: Steam bowl
  - Food temperature: Refrigerated
  - Instructions: Wash food and cut into similar sized pieces under 1/4 in. or 5 mm thick. Season as desired. Follow the instructions under Asparagus for adding water and using the steam bowl.

us_main.book.book Page 17 Monday, October 18, 2021 10:34 AM

Auto Defrost Mode

Using Defrost Menu

The oven has 4 preset defrost cycles. The **Defrost Menu** shows the suggested defrost cycle for various foods.

1 Press **Auto Defrost**.

2 Use the number keys to enter the desired menu code from the **Auto Defrost Menu**.

3 Use the number keys to enter the desired amounts.

4 Press **START**.

- At the chime, open the oven door and turn the food over. Remove any food that has thawed. Return the items which are still frozen to the oven, and press **Start** to complete the defrost cycle.

Using Time Defrost

This feature defaults to microwave power level 3.

1 Press **Auto Defrost** twice.

2 Press the number keys to set the defrost time.

3 Press **START**.

- At the chime, open the oven door and turn the food over. Remove any food that has thawed. Return the items which are still frozen to the oven, and press **Start** to complete the defrost cycle.

NOTE

- The countdown appears in the display after **Start** is pressed. The oven chimes once during the defrost cycle.
- When using Defrost, enter the net weight in pounds and tenths of pounds (the weight of the food minus the container).

Defrost Menu

Refer to the information below to set the desired menu item and see the recommended amounts.

- **1 Meat** (0.1 - 6.0 lbs)
  - Beef: Ground beef, round steak, stew cubes, tenderloin steak, pot roast, rib roast, rump roast, chuck roast, hamburger patties
  - Lamb: Chops (1 inch thick), rolled roast
  - Pork: Chops (0.5 inch thick), hot dogs, spareribs, country-style ribs, rolled roast, sausage
- **2 Poultry** (0.1 - 6.0 lbs)
  - Beef: Ground beef, round steak, stew cubes, tenderloin steak, pot roast, rib roast, rump roast, chuck roast, hamburger patties
  - Lamb: Chops (1 inch thick), rolled roast
  - Pork: Chops (0.5 inch thick), hot dogs, spareribs, country-style ribs, rolled roast, sausage
- **3 Fish** (0.1 - 6.0 lbs)
  - Fish: Fillets, whole steaks
  - Shellfish: Crab meat, lobster tails, shrimp, scallops
- **4 Bread** (0.1 - 1.0 lbs)
  - Muffins, rolls, cake

More Modes

The product firmware may be updated to include additional functions through **More Modes**.

The modes currently included are the Soften, Melt, Kids Meal, and Simmer functions.

Soften Mode

The oven uses low power to soften foods (butter, ice cream, cream cheese, frozen juice).

1 Press **More Modes**.

2 Press **1** to select the Soften mode.

3 Use the number keys to enter the desired menu code from the **Soften Menu**.

4 Use the number keys to enter the desired amounts from the **Soften Menu**.

5 Press **START**.

- When the cook time ends, a melody sounds and **COOK END** appears in the display.

us_main.book.book Page 18 Monday, October 18, 2021 10:34 AM

Soften Menu

Refer to the information below to set the desired menu item and see the recommended amounts.

- **1 Butter** (1, 2 or 3 sticks (4 oz/1 stick))
  - Cookware: Microwave-safe dish
  - Food temperature: Refrigerated
  - Instructions: Unwrap and place food in oven. Butter will be at room temperature and ready for use in a recipe.
- **2 Ice Cream** (Pint, quart, half gallon)
  - Food temperature: Frozen
  - Instructions: Remove lid and cover. Place food in oven. Ice cream will be soft enough to make scooping easier.
- **3 Cream Cheese** (3 or 8 oz)
  - Cookware: Microwave-safe dish
  - Food temperature: Refrigerated
  - Instructions: Unwrap and place food in oven. Cream cheese will be at room temperature and ready for use in a recipe.
- **4 Frozen Juice** (6, 12 or 16 oz)
  - Food temperature: Frozen
  - Instructions: Remove top. Frozen juice will be soft enough to mix easily with water.

Melt Mode

The oven uses low power to melt foods (butter, chocolate, cheese, marshmallows).

1. Press **More Modes**.
2. Press **2** to select the Melt mode.
3. Use the number keys to enter the desired menu code from the **Melt Menu**.
4. Use the number keys to enter the desired amounts from the **Melt Menu**.
5. Press **START**.
   - When the cook time ends, a melody sounds and **COOK END** appears in the display.

Melt Menu

Refer to the information below to set the desired menu item and see the recommended amounts.

- **1 Butter** (1, 2 or 3 sticks (4 oz/1 stick))
  - Cookware: Microwave-safe bowl
  - Food temperature: Refrigerated
  - Instructions: Unwrap and place food in oven. After heating, stir to complete melting.
- **2 Chocolate** (4 or 8 oz)
  - Cookware: Microwave-safe bowl
  - Food temperature: Room
  - Instructions: Chocolate chips or squares of baking chocolate may be used. Unwrap and place food in oven. After heating, stir to complete melting.
- **3 Cheese** (8 or 16 oz)
  - Cookware: Microwave-safe bowl
  - Food temperature: Refrigerated
  - Instructions: Use processed cheese food only. Unwrap and cut into cubes. Place food in oven. Stir the food at the beep. After heating, stir to complete melting.
- **4 Marshmallow** (5 or 10 oz)
  - Cookware: Microwave-safe bowl
  - Food temperature: Room
  - Instructions: Unwrap and place food in oven. After heating, stir to complete melting.

Kids Meal Mode

This function has preset cook settings for popular foods for kids.

1. Press **More Modes**.
2. Press **3** to select Kids Meal mode.
3. Use the number keys to enter the desired menu code from the **Kids Meal Menu**.
4. Use the number keys to enter the desired amounts from the **Kids Meal Menu**.
5. Press **START**.
   - When the cook time ends, a melody sounds and **COOK END** appears in the display.

Kids Meal Menu

This function has preset cook settings for popular foods for kids.

- **1 Mac & Cheese** (6 or 12 oz)
  - Cookware: Microwave-safe dish
  - Food temperature: Frozen

us_main.book.book Page 19 Monday, October 18, 2021 10:34 AM

- **2 Corn Dog** (2 or 4 ea (2 - 2.5 oz/1ea))
  - Cookware: Microwave-safe dish
  - Food temperature: Frozen
- **3 Chicken Nuggets** (4 or 8 oz)
  - Cookware: Microwave-safe dish
  - Food temperature: Frozen

Simmer Mode

The Simmer function provides precise cooking performance for foods that require low heat for a long cooking time.

⚠ CAUTION

- Wear oven mitts and use care when removing the cookware from the oven. Cookware will be hot, and the hot water can spill and cause scalding or burns.

1 Press **More Modes**.

2 Press **4** to select Simmer mode.

3 Use the number keys to enter the desired menu code from the **Simmer Menu**.

4 Use the number keys to enter the desired amounts from the **Simmer Menu**.

5 Press **START**.

- At the chime, open the oven door, check the rice or pasta for doneness, close the oven door and press **START**.
- When the cook time ends, a melody sounds and **COOK END** appears in the display.

Simmer Menu

Refer to the information below to set the desired menu item and see the recommended amounts.

- **1. Rice** (1, 2, 3 servings)
  - Cookware: Microwave-safe bowl†
  - Food temperature: Room
  - 1 serving (3 oz/85 g)
    2 servings (6 oz/170 g)
    3 servings (9 oz/250 g)
  - Instructions: Wash rice and place it in a microwave-safe bowl. Add twice the amount of water as rice to the bowl, or until the water covers the rice by at least an inch. Place the bowl on a paper towel on the glass tray in the oven. The paper towel will help absorb any water that boils over. Press **More Modes** and **4** to select Simmer. Press **1** to select Rice. Then press numbers to enter the weight. Press **START** to start cooking. After cooking, carefully remove the bowl from oven. Stir rice, cover and allow to rest for 5-10 minutes if needed. After standing time, drain water if needed.

NOTE

- The amount of water and time may vary depending on the type of rice used. The preset times are designed for standard long grain rice.

- **2 Farfalle** (1, 2, 3, 4 servings)
  - Cookware: Microwave-safe bowl†
  - Food temperature: Room
  - 1 serving (3 oz/85 g)
    2 servings (6 oz/170 g)
    3 servings (9 oz/255 g)
    4 servings (12 oz/340 g)
  - Instructions: Add the desired amount of pasta to a microwave-safe bowl. Add water to the bowl until it covers the Farfalle by at least 2 inches. Be generous, as the pasta absorbs the water while cooking. For example, for one serving of pasta add 5 cups of water. Place the bowl on a paper towel on the glass tray in the oven. The paper towel will help absorb any water that boils over. Press **More Modes** and **4** to select Simmer. Press **2** to select Farfalle. Then press numbers to enter the weight. Press **START** to start cooking. After cooking, remove bowl and drain water.
- **3 Fusilli** (1, 2 ,3, 4 servings)
  - Cookware: Microwave-safe bowl†
  - Food temperature: Room
  - 1 serving (3 oz/85 g)
    2 servings (6 oz/170 g)
    3 servings (9 oz/255 g)
    4 servings (12 oz/340 g)
  - Instructions: Follow instructions for cooking Farfalle.
- **4 Lasagna** (1, 2, 3 servings)
  - Cookware: Microwave-safe bowl†
  - Food temperature: Room
  - 1 serving (3 oz/85 g)
    2 servings (6 oz/170 g)
    3 servings (9 oz/255 g)
  - Instructions: Follow instructions for cooking Farfalle.

us_main.book.book Page 20 Monday, October 18, 2021 10:34 AM

- **5 Macaroni** (1, 2, 3, 4 servings)
  - Cookware: Microwave-safe bowl†
  - Food temperature: Room
  - 1 serving (3 oz/85 g)
    2 servings (6 oz/170 g)
    3 servings (9 oz/255 g)
    4 servings (12 oz/340 g)
  - Instructions: Follow instructions for cooking Farfalle.
- **6 Penne** (1, 2, 3, 4 servings)
  - Cookware: Microwave-safe bowl†
  - Food temperature: Room
  - 1 serving (3 oz/85 g)
    2 servings (6 oz/170 g)
    3 servings (9 oz/255 g)
    4 servings (12 oz/340 g)
  - Instructions: Follow instructions for cooking Farfalle.
- **7 Spaghetti** (1, 2, 3 servings)
  - Cookware: Microwave-safe bowl†
  - Food temperature: Room
  - 1 serving (3 oz/85 g)
    2 servings (6 oz/170 g)
    3 servings (9 oz/255 g)
  - Instructions: Follow instructions for cooking Farfalle.

† Use a large bowl that holds at least 1 gallon (4 L) and is at least 6 in. (15 cm) high.

Operating the Oven

Convection Bake Mode

The Convection Bake function uses a heating element to raise the temperature of the air inside the oven. The convection cooking temperature ranges from 250 °F to 450 °F. It is best to preheat the oven when convection cooking.

NOTE

- Reduce oven temperature by 25 °F from the temperature recommended on packaged foods. The baking time may vary according to the food condition or individual preference.

Setting the Convection Bake Function

Example: 45 minutes at 375 °F with preheating

1. Press **Conv. Bake**. 350 °F appears in the display.
2. Set the oven temperature: Press **3**, **7**, **5** and **START**
3. Press **START** again. The oven starts to preheat and the display shows **PREHEAT** and the oven temperature. (Do not enter the time.)
4. When the melody sounds, place the food in the oven.
5. Set the cook time: Press **4**, **5**, **0** and **0**.
6. Press **START**.
   - When the cook time ends, a melody sounds and **COOK END** appears in the display.

Example: 30 minutes at 375 °F without preheating

1. Press **Conv. Bake**. 350 °F appears in the display.
2. Set the oven temperature: Press **3**, **7**, **5** and **START**.
3. Set the cook time: Press **3**, **0**, **0** and **0**.
4. Press **START**.
   - When the cook time ends, a melody sounds and **COOK END** appears in the display.

NOTE

- When the oven reaches the set preheat temperature, a melody will sound. The oven automatically holds that temperature for 30 minutes.
- The oven temperature drops very quickly when the door is opened; however, this should not prevent food from being fully cooked during normal cooking time.

us_main.book.book Page 21 Monday, October 18, 2021 10:34 AM

- During convection cooking, the vent fan in the vent hood will automatically turn on at the 1-speed (lowest speed) setting to protect the oven.

Convection Baking Menu

- Always use the metal rack when convection baking. Place food directly on the rack or in the metal tray on the rack.
- Aluminum pans conduct heat quickly. For most convection baking, light, shiny finishes give the best results because they prevent overbrowning in the time it takes to cook the center areas. For better browning on the bottoms of cakes or pies, use dull (satin-finish) pans.
- Dark or non-shiny finishes, glass, and pyroceram absorb heat which may result in dry, crisp crusts.
- Preheating the oven is recommended when baking foods using convection.
- To prevent uneven heating and save energy, open the oven door to check food as little as possible.

Food		Temp	Time (min)	Comments
Breads	Muffins Nut Bread or Fruit Bread	400 °F 325 °F	25 to 35 70 to 80	Remove from pans immediately and cool slightly on wire rack. Interiors will be moist and tender.
Cakes	Pound Cake Butter Cakes, Cake Mixes Fudge Brownies Cheese Souffle	350 °F 350 °F 375 °F 300 °F	55 to 65 45 to 55 35 to 45 80 to 90	Cool in pan 10 minutes. Invert cakes on wire rack.
Cookies	Chocolate Chip Sugar	350 °F 350 °F	25 to 35 25 to 35	Place metal tray on rack.
Convenience foods	Frozen Pizza Frozen Bread	425 °F 400 °F	20 to 25 15 to 30	Pizza should not extend over the rack. Follow package directions for preparation.
Vegetables, Other desserts	Baked Potatoes Acorn Squash Halves Meringue Shells	425 °F 375 °F 250 °F	55 to 65 60 to 70 70 to 85	Potatoes: Pierce skin with fork before baking. Squash: Pierce skin several places. Add ½ cup water to dish. Tum squash halves cut side up after 30 minutes of cook time and cover. Meringues: When done, turn oven off and let shells stand in oven for 1 hour to dry.

NOTE

- The oven temperature indicated in the chart above is recommended over the package instruction temperature.
- The baking time in the chart above is only a guideline for your reference. Adjust the time according to conditions or your preference. Check doneness at the minimum time.

us_main.book.book Page 22 Monday, October 18, 2021 10:34 AM

Meat Roasting Menu

Food		Temp	Time (min/lb)
Beef	Ribs (2 to 4 lbs), Rare	350 °F	30 to 35
	Ribs (2 to 4 lbs), Medium	350 °F	35 to 40
	Ribs (2 to 4 lbs), Well	350 °F	40 to 45
	Boneless Ribs,Top Sirloin (2 to 4 lbs), Rare	350 °F	25 to 30
	Boneless Ribs,Top Sirloin (2 to 4 lbs), Medium	350 °F	30 to 35
	Boneless Ribs,Top Sirloin (2 to 4 lbs), Well	350 °F	35 to 40
	Beef Tenderloin, Rare	350 °F	25 to 30
	Beef Tenderloin, Medium	350 °F	30 to 35
Ham	Canned (3-lb. fully cooked)	350 °F	30 to 35
	Butt (5-lb. fully cooked)	350 °F	30 to 35
	Shank (5-lb. fully cooked)	350 °F	30 to 35
Lamb	Medium	350 °F	40 to 45
	Well	350 °F	45 to 50
Pork	Roast Pork (2 to 4 lbs)	425 °F	38 to 43
	Pork Chops (1/2 to 1-inch thick)	450 °F	35 to 45
Poultry	Whole Chicken (2 to 4 lbs)	400 °F	35 to 45
	Chicken Pieces (1 to 2 lbs)	425 °F	40 to 50
Seafood	Fish (1 to 3 lb. fillets)	400 °F	15 to 20
	Shrimp (0.5 to 1.5 lbs)	400 °F	20 to 25 (/0.5 lbs)

NOTE

- The roasting time in the chart above is only a guideline for your reference. Adjust the time according to the food condition or your preference. Check doneness at the minimum time.

Air Fry Mode

The Air Fry function is specially designed for oil-free frying.

1 Press **Air Fry**.

2 Use the number keys to enter the desired menu code from the **Air Fry Menu**.

3 Use the number keys to enter the desired amounts from the **Air Fry Menu**.

4 Press **START**.

- When the oven beeps, turn the food over.
- When the cook time ends, a melody sounds and **COOK END** appears in the display.

Air Fry Menu

Refer to the information below to set the desired menu item and see the recommended amounts.

- **1 Buffalo Wings** (1 - 2 servings)
  - Cookware: Metal tray on the rack
  - Food temperature: Frozen
  - 1 serving: 2 ea, 2 servings: 4ea
  - Instructions: Place food in oven. Turn food over at beep.
  - Convection Bake 450 °F, 25:00 - 27:00
- **2 Chicken Nuggets** (1 - 2 servings)
  - Cookware: Metal tray on the rack
  - Food temperature: Frozen
  - 1 serving: 5 ea, 2 servings: 10ea
  - Convection Bake 450 °F, 13:00 - 15:00
- **3 Chicken Tenders** (1 - 2 servings)
  - Cookware: Metal tray on the rack
  - Food temperature: Frozen
  - 1 serving: 2 ea, 2 servings: 4ea
  - Convection Bake 450 °F, 20:00 - 21:00
- **4 Fish Sticks** (1 - 2 servings)
  - Cookware: Metal tray on the rack

us_main.book.book Page 23 Monday, October 18, 2021 10:34 AM

- Food temperature: Frozen
- 1 serving: 6 ea, 2 servings: 12 ea
- Instructions: Place food in oven. Turn food over at beep.
- Convection Bake 450 °F, 14:00 - 16:00

• **5 French Fries** (1 - 2 servings)
- Cookware: Metal tray on the rack
- Food temperature: Frozen
- 1 serving: 6 oz (180 g), 2 servings: 13 oz (370 g)
- Convection Bake 450 °F, 18:00 - 20:00

• **6 Hash Brown Patties** (1 - 2 servings)
- Cookware: Metal tray on the rack
- Food temperature: Frozen
- 1 serving: 6 ea, 2 servings: 12 ea
- Convection Bake 450 °F, 19:00 - 20:00

• **7 Mozzarella Sticks** (1 - 2 servings)
- Cookware: Metal tray on the rack
- Food temperature: Frozen
- 1 serving: 3 ea, 2 servings: 6 ea
- Convection Bake 450 °F, 11:00 - 12:00

• **8 Popcorn Shrimp** (1 - 2 servings)
- Cookware: Metal tray on the rack
- Food temperature: Frozen
- 1 serving: 19 ea, 2 servings: 38 ea
- Instructions: Place food in oven. Turn food over at beep.
- Convection Bake 450 °F, 14:00 - 16:00

• **9 Potato Wedge** (1 - 2 servings)
- Cookware: Metal tray on the rack
- Food temperature: Frozen
- 1 serving: 9 ea, 2 servings: 18 ea
- Instructions: Place food in oven. Turn food over at beep.
- Convection Bake 450 °F, 24:00 - 26:00

Combination Mode

Use this mode for roast meat, roast chicken, roast vegetables, frozen pizza, cake, pies and breads.

NOTE

- The temperature ranges from 250 °F to 450 °F.
- During combination cooking, the vent fan in the vent hood will automatically turn on at the 1-speed (lowest speed) setting to protect the oven.

Setting the Combination Bake Function

Example: 30 minutes at 400 °F

1. Press **Combi. Bake**. 325 °F appears in the display.
2. Set the oven temperature: Press **4**, **0**, **0** and **START**.
3. Set the cook time: Press **3**, **0**, **0** and **0**.
4. Press **START**.
   - When the cook time ends, a melody sounds and **COOK END** appears in the display.

Combination Bake Menu

Food		Temp	Time (min)	Comments
Pie, Pastries	Quiche	400 °F	40 to 50	Let stand 1 hour before cutting.
Convenience Foods	Frozen Pizza Frozen Bread	425 °F 400 °F	20 to 30 15 to 30	Follow package directions for preparation.
Vegetable	Baked Potatoes	400 °F	25 to 35	Pierce skin with fork before baking. Place on the rack.

NOTE

- The baking time in the chart above is only a guideline for your reference. Adjust the time according to the food condition or your preference. Check doneness at the minimum time.

us_main.book.book Page 24 Monday, October 18, 2021 10:34 AM

Combination Roast Function

Example: 30 minutes at 400 °F

1 Press **Combi. Roast**. 375 °F appears in the display.

2 Set the oven temperature: Press **4**, **0**, **0** and **START**.

3 Set the cook time: Press **3**, **0**, **0** and **0**.

4 Press **START**.

- When the cook time ends, a melody sounds and **COOK END** appears in the display.

Combination Roast Menu

Food		Temp	Time (min/lb)	Comments
Beef • Ribs (2 to 4 lbs) • Boneless Ribs, Top Sirloin (2 to 4 lbs)	Ribs (rare) Ribs (medium) Ribs (well) Boneless Ribs, Top Sirloin (rare) Boneless Ribs, Top Sirloin (medium) Boneless Ribs, Top Sirloin (well) Beef Tenderloin (rare) Beef Tenderloin (medium)	425 °F 425 °F 425 °F 425 °F 425 °F 425 °F 425 °F 425 °F	20 to 25 25 to 30 30 to 35 17 to 22 20 to 25 23 to 28 8 to 12 10 to 14	Turn over halfway through the cooking time.
Ham	Canned (3 lbs fully cooked) Butt (5 lbs fully cooked) Shank (5 lbs fully cooked)	375 °F 375 °F 375 °F	25 to 30 25 to 30 25 to 30	Turn over halfway through the cooking time.
Lamb	Medium Well	350 °F 350 °F	12 to 17 15 to 20	Turn over halfway through the cooking time.
Pork	Roast Pork (2 to 4 lbs) Pork Chops (1/2 to 1-inch thick)	450 °F 450 °F	23 to 33 20 to 30	Turn over halfway through the cooking time.
Poultry	Whole Chicken (2 to 4 lbs) Chicken Pieces (1 to 2 lbs)	375 °F 375 °F	20 to 25 35 to 45	Turn over halfway through the cooking time.
Seafood	Fish (1 to 3 lbs, fillets) Shrimp (0.5 to 1.5 lbs)	350 °F 350 °F	12 to 18 7 to 12 (/ 0.5 lbs)	Turn over halfway through the cooking time.

NOTE

- The roasting time in the chart above is only a guideline for your reference. Adjust the time according to the food condition or your preference. Check doneness at the minimum time.

Speed Combination Mode

This function includes 4 presets for cooking common foods without entering settings manually. For best results, place food on the rack. When cooking meats, use the metal tray/drip pan to catch drippings.

1 Press **Speed Combi.**

2 Use the number keys to enter the desired menu code from the **Speed Combination Menu**.

3 Use the number keys to enter the desired amounts from the **Speed Combination Menu**.

us_main.book.book Page 25 Monday, October 18, 2021 10:34 AM

4 Press **START**.

- When the oven beeps, turn food over.
- When the cook time ends, a melody sounds and **COOK END** appears in the display.

Speed Combination Menu

Refer to the information below to set the desired menu item and see the recommended amounts.

- **1 Whole Chicken** (2.0 - 4.0 lbs)
  - Cookware: Rack on the metal tray
  - Food temperature: Refrigerated
  - Instructions: Thoroughly wash inside and outside of chicken with cold water. Pat chicken dry with paper towels, secure the legs with kitchen twine. Brush outside of chicken with melted butter or margarine. Place chicken breast side down. Turn food over at beep. After cooking, loosely tent chicken with aluminum foil and let stand for 10 minutes.
- **2 Roast Pork** (2.0 - 4.0 lbs)
  - Cookware: Rack on the metal tray
  - Food temperature: Refrigerated
  - Instructions: Pat dry with paper towels. After cooking, loosely tent roast with aluminum foil and let stand 5 to 10 minutes.
- **3 Frozen Lasagna** (10 or 21 oz)
  - Cookware: Rack on the metal tray
  - Food temperature: Frozen
  - Instructions: Remove from outer package. Remove film cover. If lasagna is not in an ovenproof container, transfer it to an ovenproof dish. After cooking, let stand for 5 minutes.
- **4 Baked Potato** (1-4 potatoes (7-9 oz/ea))
  - Cookware: Rack on the metal tray
  - Food temperature: Room
  - Instructions: Pierce each potato several times with a fork and place in oven.

Warm Mode

This function maintains an oven temperature of less than 195 °F. This function should not be used to reheat cold food. It is designed to keep cooked food warm for serving up to 3 hours after cooking has finished. After 3 hours the function shuts the oven OFF automatically.

Setting the Warm Function

1 Press **Warm**.

2 Select the temperature level: Press **1** for High, **2** for Medium, or **3** for Low.

- High: 195 °F (91 °C)
- Medium: 165 °F (74 °C)
- Low: 140 °F (60 °C)

3 Press **START** to start warming.

4 Press **STOP/Clear** at any time to cancel.

NOTE

- This function is intended to keep food warm. Do not use it to cool food down.
- It is normal for the fan to operate during the Warm mode.

Proof Mode

This function maintains a warm oven for rising yeast-leavened products before baking.

Setting the Proof Function

Example: Proofing for 2 hours

1 Press **Proof**.

2 Set the cook time: Press **2**, **0** and **0**.

3 Press **START** to start proofing.

4 Press **STOP/Clear** at any time to cancel.

NOTE

- To avoid lowering the oven temperature and lengthening the proofing time, do not open the oven door unnecessarily.
- Check bread products early to avoid overproofing.
- Do not use the Proofing mode for warming food or keeping food hot. The proofing oven temperature is not hot enough to hold foods at safe temperatures. Use the Warm function to keep food warm.
- Proofing will not operate if the oven is too hot. Allow the oven to cool before proofing.

us_main.book.book Page 26 Monday, October 18, 2021 10:34 AM

More Modes

The product firmware may be updated to include additional functions through **More Modes**. The function currently includes the Dehydrate mode.

Dehydrate

With this function, you can dry fruit, veggies, and beef into healthy and nutritional snacks and tasty jerky without chemicals and preservatives. Place baking paper on the metal tray and spread the food in a single layer. Dehydrate temperatures range from 100 °F to 200 °F.

Setting the Dehydrate Function

Example: Dehydrating for 5 hours at 140 °F

1. Press **More Modes**.
2. Press **1** to select **Dehydrate** mode.
3. Press **Dehydrate**. 160 °F appears in the display.
4. Set the oven temperature: Press **1**, **4**, **0** and **START**.
5. Set the cook time: Press **5**, **0** and **0**.
6. Press **START**. The oven begins to dehydrate.
7. Press **STOP/Clear** to cancel at any time or when cooking is complete.

Dehydrate Menu

Refer to the information below to set the desired menu item.

- **Bananas**
  - Preparation: Cut into 1/4" (5 - 6 mm) slices.
  - Set temp / Time: 160 °F / 5 - 8 hrs
  - Use: Snacks, baby food, granola, cookies and banana bread
- **Figs**
  - Preparation: Remove stems and halve.
  - Set temp / Time: 160 °F / 8 - 9 hrs
  - Use: Fillings, cakes, puddings, bread and cookies
- **Kiwi**
  - Preparation: Peel and cut into 3/8" (8 - 12 mm) slices.
  - Set temp / Time: 160 °F / 5 - 8 hrs
  - Use: Snacks
- **Mangos**
  - Preparation: Remove skin and cut into 3/8" (6 - 10 mm) slices.
  - Set temp / Time: 160 °F / 6 - 9 hrs
  - Use: Snacks, cereals, baked goods
- **Pineapple**
  - Preparation: Peel, core and cut into 3/8" (8 - 12 mm) slices.
  - Set temp / Time: 160 °F / 6 - 9 hrs
  - Use: Snacks, baked goods, baked granola
- **Tomatoes**
  - Preparation: Wash and slice into 1/4" (6 mm) thick circles.
  - Set temp / Time: 160 °F / 6 - 9 hrs
  - Use: Soups, stews, paste or sauce
- **Mushrooms**
  - Preparation: Clean with soft brush or cloth. Don’t wash.
  - Set temp / Time: 140 °F / 4 - 8 hrs
  - Use: Rehydrate for soups, meat dishes, omelets or frying
- **Beef jerky**
  - Preparation: Cut meat into 1/4" (5 - 6 mm) thick slices and marinate for 6 - 8 hours in the refrigerator.
  - Set temp / Time: 175 °F / 6 - 9 hrs
  - Use: Snacks

Cookware Guide

Microwave-Safe Cookware

Use microwavable cookware.

- **Ovenproof Glass**
  - Ovenproof glassware that is treated for high intensity heat so it is heat-resistant is microwave-safe.
  - Use utility dishes, loaf dishes, pie plates, cake plates, liquid measuring cups, casseroles and bowls without metal rims.
  - Do not use delicate glassware, such as tumblers or wine glasses, as these might shatter when heated.

us_main.book.book Page 27 Monday, October 18, 2021 10:34 AM

- **China**
  - Use bowls, cups, serving plates, pottery, stoneware, ceramic, and platters without metal rims or handles. Many containers made of these materials are microwave-safe, but test them before use.
- **Plastic**
  - **Plastic Storage Containers**: Use plastic dishes, cups, semi-rigid freezer containers and plastic bags only for short cooking times. Do not use them when cooking food for long periods or at high power levels, as the hot food will eventually warp or melt the plastic.
  - **Plastic wrap (as a cover)**: Lay the plastic wrap loosely over the dish and press it to the sides. Vent plastic wrap by turning back one edge slightly to allow excess steam to escape. The dish should be deep enough so that the plastic wrap will not touch the food. As the food heats it may melt the plastic wrap wherever the wrap touches the food.
  - **Plastic Cooking Bags**: Provided they are specially made for cooking, cooking bags are microwave safe. Remember to make a slit in the bag so that steam can escape. Never use ordinary plastic bags for cooking in the microwave oven, as they will melt and rupture.
  - **Plastic Microwave Cookware**: A variety of shapes and sizes of microwave cookware are available. You may be able to use items you already have on hand rather than investing in new kitchen equipment.
- **Paper**
  - Use paper towels, waxed paper, paper napkins, and paper plates with no metal rims or design. Look for the manufacturer's label for use in the microwave oven.
  - Paper plates and containers are convenient and safe to use in the microwave oven, provided that the cooking time is short and the foods to be cooked are low in fat and moisture. Paper towels are also very useful for wrapping foods and for lining baking trays in which greasy foods such as bacon are cooked.
  - Avoid colored paper products as the color may run. Do not use recycled paper products in the microwave oven. They may contain impurities which could cause arcing or fires when used in the microwave.
- **Tableware**
  - Many containers made of pottery, stoneware and ceramic are also microwave-safe. If in doubt consult the manufacturer's literature or perform the microwave test.
  - Do not put plates with painted decoration in the oven, as the paint may contain metal and cause arcing.

Microwave-Unsafe Cookware

- **Metal Containers/Metal Decoration**
  - Never use metal or metal-rimmed cookware in the microwave oven.
  - Microwaves cannot penetrate metal. They will bounce off any metal object in the oven and cause arcing, an alarming phenomenon that resembles lightning.
  - Metal shields the food from microwave energy and produces uneven cooking. Also avoid metal skewers, thermometers, foil trays, metal-rimmed or metal-banded dinnerware, casserole dishes, etc. The metal rim interferes with normal cooking and may damage the oven.
- **Aluminum Foil**
  - Avoid large sheets of aluminum foil because they hinder cooking and may cause harmful arcing.
  - Use small pieces of foil to shield poultry legs and wings.
  - Keep ALL aluminum foil at least 1 inch from the side walls and door of the oven.
- **Wood**
  - Wood bowls and boards will dry out and may split or crack when you use them in the microwave oven.
  - Baskets react in the same way.
- **Tightly Covered Cookware**
  - Be sure to leave openings for steam to escape from covered containers.
  - Pierce plastic pouches of vegetables or other food items before cooking.
  - Tightly closed pouches could explode.
- **Brown Paper**
  - Avoid using brown paper bags.
  - They absorb too much heat and could burn.
- **Flawed or Chipped Cookware**
  - Any container that is cracked, flawed, or chipped may break in the oven.
- **Metal Twist Ties**
  - Remove metal twist ties from plastic or paper bags.
  - They become hot and could cause a fire.

us_main.book.book Page 28 Monday, October 18, 2021 10:34 AM

Testing Cookware before Use

Most heat resistant and non-metallic cookware is safe for use in your oven. However, some cookware may contain materials that are not suitable for microwave use. Follow the steps below to find out if cookware can be used in the microwave.

1. Place the container in question and a glass measuring cup filled with water next to each other inside the oven.

2. Heat the container and glass measuring cup for 1 minute at HIGH power.
   - If the water heats up but the container remains cool to the touch, the container is microwave-safe.
   - If the temperature of the water does not change but the container becomes warm, it is not safe for use in the microwave oven.

⚠ CAUTION

- Some items with high lead or iron content are not suitable for microwave cooking.
- Cookware should be checked to ensure that it is suitable for use in the microwave.
- Always be careful when taking cookware out of the oven. Some dishes absorb heat from the cooked food and may be hot.

Convection Cookware

- Metal pans are recommended for all types of baked products, but especially where browning or crusting is important.
- Metal pans with a dark or dull finish are best for breads and pies because they absorb heat and produce a crisper crust.
- Shiny aluminum pans are better for cakes, cookies, or muffins because these pans reflect heat and help produce a light, tender crust.
- Glass or glass-ceramic casserole or baking dishes are best suited for egg and cheese recipes because the glass is easy to clean.

Combination Cooking Cookware

- Glass or glass-ceramic baking containers are recommended. Be sure not to use items with metal trim as it may cause arcing (sparking) with the oven wall or oven shelf, damaging the cookware, the shelf, or the oven.
- Heat-resistant plastic microwave cookware (safe to 450°F) may be used, but is not recommended for foods that require crusting or all-around browning, because plastic is a poor conductor of heat.

Cooking Guide

Cooking Tips

Carefully monitor the food in the microwave oven while it is cooking. Directions given in recipes to elevate, stir, etc., are the minimum steps recommended. If food is overcooked (dry), undercooked, or unevenly cooked, make adjustments before or during cooking to correct the problem.

- **Overcooked or Dry Food**
  - **Sprinkling**: Sprinkle low-moisture foods such as roasts and vegetables with water before cooking, or cover them to retain moisture.
  - **Density**: Light, porous food such as cakes and breads cook more quickly than heavy, dense foods such as roasts and casseroles.
  - **Shielding**: Cover the corners of square dishes with small strips of aluminum foil to prevent overcooking. Don’t use too much foil, and secure the foil to the dish. Foil can cause arcing if it gets too close to the oven walls during cooking.
  - **Bones and Fat**: Bones conduct heat, and fat cooks more quickly than meat. Take care with bony or fatty cuts of meat.
- **Undercooked Food**
  - **Covering**: Cover food with a microwave-safe lid, parchment paper (not waxed paper), or plastic wrap to trap heat and steam and cook food more quickly.
  - **Standing Time**: Let food stand for several minutes after being removed from the oven to allow it to finish cooking and help flavors blend and develop.
  - **Quantity**: The more food you place in the oven, the longer the required cooking time.
  - **Temperature**: Ice-cold ingredients take much longer to cook than room temperature ingredients.
- **Unevenly Cooked Food**
  - **Stirring**: Stir food from the outside toward the center during cooking, as food at the outside of the dish heats more quickly.
  - **Arranging**: Turn food over several times during cooking. The upper portion of thick

us_main.book.book Page 29 Monday, October 18, 2021 10:34 AM

foods cooks more quickly than the lower portion.

- **Shaping**: Place the thickest portions of foods like meat, poultry or fish toward the outside of the cookware to help them cook more evenly. If possible, shape foods into thin rounds or rings.

- **Foods with Skin, Shell or Membrane**
  - **Skin or Membrane**: Pierce the outsides of foods like potatoes, sausages, or egg whites or yolks before cooking.
  - **Shell**: Pierce or remove the shells from eggs, clams, oysters, or other shelled foods before cooking.
- **Defrosting Tips**
  - Remove fish, shellfish, meat, and poultry from its original wrapping paper or plastic package. Otherwise, the wrap close to the foods will hold steam and heat, which can cause the outer surface of the foods to be cooked.
  - Remove any metal twist ties.
  - Always slit or pierce plastic pouches or packaging.
  - Open containers such as cartons before they are placed in the oven.
  - If food is foil wrapped, remove foil and place the food in a suitable container.
  - The length of defrosting time varies depending on the shape of the food and on how solidly the food is frozen.
  - As food begins to defrost, separate the food into pieces so that they can defrost more easily.
  - Turn over food during defrosting or standing time. Separate into pieces and remove food as required.
  - Let food stand after defrosting. Food should still be somewhat icy in the center when removed from the oven.
  - When using Defrost, the weight to be entered is the net weight in pounds and tenths of pounds (the weight of the food minus the container).
  - Slit the skins of frozen food such as sausage.
  - Bend plastic pouches of food to ensure even defrosting.
  - Place food in a shallow container or in a microwave roasting dish to catch the drippings.
  - Always underestimate defrosting time. Food should still be somewhat icy in the center when removed from the oven. If defrosted food is still frozen solid in the center, return it to the upper oven for more defrosting.
  - Depending on the shape of the food, some areas may defrost more quickly than others.
  - The shape of the package affects how quickly food will defrost. Shallow packages will defrost more quickly than a deep block.
  - For best results, shape ground meat into the form of a doughnut before freezing. When defrosting, scrape off thawed meat when the beep sounds and continue defrosting.
  - Use small pieces of aluminum foil to shield parts of food such as chicken wings, leg tips, fish tails, or areas that start to get warm. Make sure the foil does not touch the sides, top, or bottom of the oven. The foil can damage the oven lining.

Convection Cooking Tips

Convection cooking circulates hot air through the oven cavity with a fan. The constantly moving air surrounds the food to heat the outer portion quickly, creating even browning and sealed-in flavor by the constant motion of hot air over the food surfaces. Press the Convection button to use the convection functions on the oven. Do not use the oven without the turntable in place.

NOTE

- Always use the metal rack on the turntable when convection cooking.
- Do not cover the turntable or metal rack with aluminum foil. It interferes with the flow of air that cooks the food.
- Round pizza pans are excellent cooking utensils for many convection-only items. Choose pans that do not have extended handles.
- Use convection cooking for items like soufflés, breads, cookies, angel food cakes, pizza, and some meat and fish dishes.
- Your oven comes equipped with a metal tray which can be used for cooking in convection mode or combination mode.
- You do not need to use any special techniques to adapt your favorite oven recipes to convection cooking, but you do need to lower the oven temperature by 25 °F from the temperature recommended on the packaging when cooking prepared foods.

us_main.book.book Page 30 Monday, October 18, 2021 10:34 AM

NOTE

- When baking cakes, cookies, breads, rolls, or other baked foods, most recipes call for preheating. Preheat the empty oven just as you do a regular oven. You can start cooking more dense foods such as meats, casseroles, and poultry without preheating.
- All heatproof cookware or metal accessories can be used in convection cooking.
- Use the metal accessories only for convection cooking. Never use for microwave or combination cooking since arcing and damage to the oven may occur.
- After preheating, if you do not open the door, the oven will automatically hold at the preheated temperature for 30 minutes.

PRECAUTIONS

- The oven cavity, door, turntable, roller rest, metal tray, metal rack, and cooking accessories will become very hot. Use oven mitts when removing the food, cooking accessories, metal rack, metal tray, and turntable from the oven after convection cooking.
- Do not use lightweight plastic containers, plastic wraps, or paper products during any convection cycle.

Combination Cooking Tips

Combination microwave-convection cooking shortens the cooking time for foods that would usually take a long time to cook. It leaves meats crispy on the outside and juicy on the inside. In combination cooking, the convection heat and microwave energy alternate automatically.

NOTE

- Meats may be roasted directly on the metal rack or in a shallow roasting pan placed on the rack. Check the Cooking Guide for instructions on using the metal rack.
- Less tender cuts of beef can be roasted and tenderized using oven cooking bags.
- When baking, check for doneness after cooking time is up. If not completely done, let stand in oven for a few minutes to complete cooking.

Precautions

- All cookware used for combination cooking must be both microwave-safe and oven-safe.
- During combination baking, some baking cookware may cause arcing when it comes in contact with the oven walls or metal accessory racks. Arcing is a discharge of electricity that occurs when microwaves come in contact with metal.
  - If arcing occurs, immediately stop the cooking cycle and place a heat resistant dish between the pan and the metal rack.
  - For best results, use the metal tray supplied with your oven.
  - If arcing occurs with other baking cookware, do not use it for combination cooking.

us_main.book.book Page 31 Monday, October 18, 2021 10:34 AM

SMART FUNCTIONS

LG ThinQ Application

This feature is only available on models with Wi-Fi.

The **LG ThinQ** application allows you to communicate with the appliance using a smartphone.

LG ThinQ Application Features

- **Settings**
  - Allows you to set various options on the oven and in the application.
- **Smart Diagnosis™**
  - This function provides useful information for diagnosing and solving issues with the appliance based on the pattern of use.
- **Scan to Cook**
  - Scan the barcode on a ready-made meal using the LG ThinQ application and send the recommended or customized cooking instructions straight to your oven.
- **Monitoring**
  - This function helps you check the current status, remaining time, cook settings and end time in one place.
- **Product Notifications**
  - Turn on the Push Alerts to receive appliance status notifications. The notifications are triggered even if the **LG ThinQ** application is not open.
- **Timer**
  - You can set the timer from the application.
- **Firmware Update**
  - Keep the appliance updated.

NOTE

- If you change your wireless router, Internet service provider, or password, delete the connected appliance from the **LG ThinQ** application and connect it again.
- This information is current at the time of publication. The application is subject to change for product improvement purposes without notice to users.

Before Using LG ThinQ Application

1 Use a smartphone to check the strength of the wireless router (Wi-Fi network) near the appliance.

- If the appliance is too far from the wireless router, the signal becomes weak. It may take a long time to connect or fail to install the application.

2 Turn off the **Mobile data** or **Cellular Data** on your smartphone.

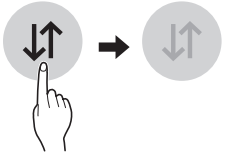

3 Connect your smartphone to the wireless router.

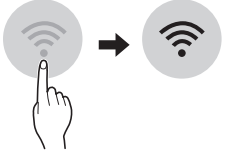

NOTE

- To verify the Wi-Fi connection, check that the icon on the control panel is lit.
- The appliance supports 2.4 GHz Wi-Fi networks only. To check your network frequency, contact your Internet service provider or refer to your wireless router manual.
- **LG ThinQ** is not responsible for any network connection problems or any faults, malfunctions, or errors caused by network connection.
- The surrounding wireless environment can make the wireless network service run slowly.
- If the appliance is having trouble connecting to the Wi-Fi network, it may be too far from the router. Purchase a Wi-Fi repeater (range extender) to improve the Wi-Fi signal strength.
- The network connection may not work properly depending on the Internet service provider.
- The Wi-Fi may not connect or the connection may be interrupted because of the home network environment.

ENGLISH

us_main.book.book Page 32 Monday, October 18, 2021 10:34 AM

NOTE

- If the appliance cannot be connected due to problems with the wireless signal transmission, unplug the appliance and wait about a minute before trying again.
- If the firewall on your wireless router is enabled, disable the firewall or add an exception to it.
- The wireless network name (SSID) should be a combination of English letters and numbers. (Do not use special characters.)
- Smartphone user interface (UI) may vary depending on the mobile operating system (OS) and the manufacturer.
- If the security protocol of the router is set to **WEP**, network setup may fail. Change the security protocol (**WPA2** is recommended), and register the product again.

Installing the LG ThinQ Application

Search for the **LG ThinQ** application from the Google Play Store or Apple App Store on a smartphone. Follow instructions to download and install the application.

Wireless LAN Module Specifications

Frequency Range	2412 - 2462 MHz
Output Power (Max)	< 30 dBm

FCC Notice

The following notice covers the transmitter module contained in this product.

This equipment has been tested and found to comply with the limits for a Class B digital device, pursuant to Part 15 of the FCC Rules. These limits are designed to provide reasonable protection against harmful interference in a residential installation. This equipment generates, uses, and can radiate radio frequency energy and, if not installed and used in accordance with the instructions, may cause harmful interference to radio communications. However, there is no guarantee that interference will not occur in a particular installation. If this equipment does cause harmful interference to radio or television reception, which can be determined by turning the equipment off and on, the user is encouraged to try to correct the interference by one or more of the following measures:

- Reorient or relocate the receiving antenna.
- Increase the separation between the equipment and the receiver.
- Connect the equipment into an outlet on a circuit different from that to which the receiver is connected.
- Consult the dealer or an experienced radio/TV technician for help.

This device complies with part 15 of the FCC Rules. Operation is subject to the following two conditions:

(1) This device may not cause harmful interference and

(2) This device must accept any interference received, including interference that may cause undesired operation.

Any changes or modifications in construction of this device which are not expressly approved by the party responsible for compliance could void the user's authority to operate the equipment.

FCC RF Radiation Exposure Statement

This equipment complies with FCC radiation exposure limits set forth for an uncontrolled environment. This transmitter must not be co-located or operating in conjunction with any other antenna or transmitter.

This equipment should be installed and operated with a minimum distance of 20 cm (7.8 inches) between the antenna and your body. Users must follow the specific operating instructions for satisfying RF exposure compliance.

Open Source Software Notice Information

To obtain the source code under GPL, LGPL, MPL, and other open source licenses that have the obligations to disclose source code, that is contained in this product, and to access all referred license terms, copyright notices and other relevant documents please visit https://opensource.lge.com.

LG Electronics will also provide open source code to you on CD-ROM for a charge covering the cost of performing such distribution (such as the cost of media, shipping, and handling) upon email request to opensource@lge.com.

This offer is valid to anyone in receipt of this information for a period of three years after our last shipment of this product.

us_main.book.book Page 33 Monday, October 18, 2021 10:34 AM

Smart Diagnosis™ Feature

This feature is only available on models with the or logo.

Use this feature to help you diagnose and solve problems with your appliance.

NOTE

- For reasons not attributable to LGE's negligence, the service may not operate due to external factors such as, but not limited to, Wi-Fi unavailability, Wi-Fi disconnection, local app store policy, or app unavailability.
- The feature may be subject to change without prior notice and may have a different form depending on where you are located.

Using LG ThinQ to Diagnose Issues

If you experience a problem with your Wi-Fi equipped appliance, it can transmit troubleshooting data to a smartphone using the **LG ThinQ** application.

- Launch the **LG ThinQ** application and select the **Smart Diagnosis** feature in the menu. Follow the instructions provided in the **LG ThinQ** application.

Using Audible Diagnosis to Diagnose Issues

Follow the instructions below to use the audible diagnosis method.

- Launch the **LG ThinQ** application and select the **Smart Diagnosis** feature in the menu. Follow the instructions for audible diagnosis provided in the **LG ThinQ** application.

1 Press the **START** button for three seconds.

- If the display has been locked, you must deactivate the lock and then reactivate it.

2 Hold the mouthpiece of your phone in front of the **Smart Diagnosis** logo located on the control panel.

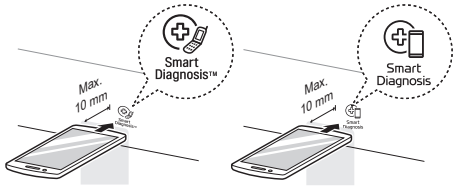

3 Keep the phone in place until the tone transmission has finished. The display will count down the time. Once the countdown is over and the tones have stopped, the diagnosis will be displayed in the application.

NOTE

- For best results, do not move the phone while the tones are being transmitted.

us_main.book.book Page 34 Monday, October 18, 2021 10:34 AM

MAINTENANCE

Cleaning

Cleaning the Interior

1 Use a damp cloth to clean the surfaces of the door and wipe out crumbs between the door and the frame.

2 Remove greasy spatters with a soapy cloth then rinse and dry.

- Wipe spatters immediately with a wet paper towel, especially after cooking chicken or bacon.
- If steam accumulates inside or outside of the oven door, wipe the panels with a soft cloth.
- For stubborn soil, boil a cup of water in the oven for 2 to 3 minutes. Steam will soften the soil. To get rid of odors inside the oven, boil a cup of water with some lemon juice or vinegar in it.

Cleaning the Exterior

1 Clean the outside of the oven with soap and water.

2 Rinse with clean water and dry with a soft cloth or paper towel.

- To prevent damage to the internal working parts of the oven, do not allow water to seep into the ventilation openings.
- The door and door seals should be kept clean. Use warm, soapy water to clean. Rinse off soap residue and dry thoroughly.
- Frequently wipe metal parts with a damp cloth.

Cleaning the Control Panel

1 Open the door to prevent the oven from accidentally starting.

2 Wipe with a damp cloth followed immediately by a dry cloth.

3 Press **STOP/Clear** after cleaning.

Cleaning the Accessories

Wash the glass tray and rotating ring in mild, sudsy water. For heavily soiled areas, use a mild cleanser and scouring sponge. Dry completely before use.

- The glass tray and rotating ring are dishwasher safe.

Cleaning the Rack

Wash the rack with soap and a soft cloth or nylon scrub brush.

- Do not use abrasive scrubbers or cleaners to clean rack.
- Dry completely before use.

NOTE

- Abrasive cleansers, steel wool pads, gritty wash cloths, some paper towels, etc., can damage the control panel and the interior and exterior oven surfaces.

Cleaning the Grease Filters

Filters should be cleaned at least once a month or more often if needed.

1 To remove, slide the grease filter back slightly and pull it downward.

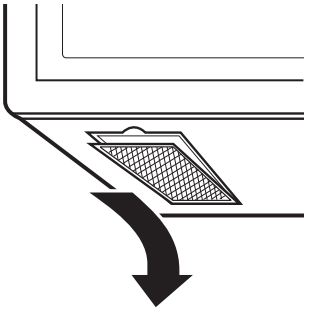

2 Soak grease filters in hot water and a mild detergent.

3 Rinse well and shake to dry.

- Do not use ammonia or place in a dishwasher. The aluminum will darken.

us_main.book.book Page 35 Monday, October 18, 2021 10:34 AM

4 To reinstall, slide the filter in on the back side and push it upward to secure it.

NOTE

- Do not operate the hood without the filters in place.

Replacing Parts

Unplug the power cord and put on gloves before replacing parts.

Replacing the Charcoal Filter

1 Unplug the power cord and wear gloves.

2 Remove the vent grille screw. Open the oven door, hold both sides of the vent grille and remove it.

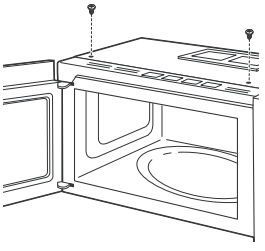

3 Remove the old charcoal filter.

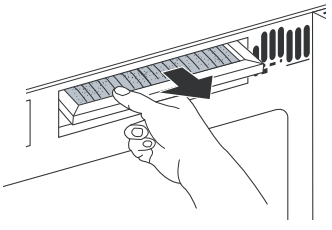

4 Slide a new charcoal filter into place. The filter should rest at the angle shown.

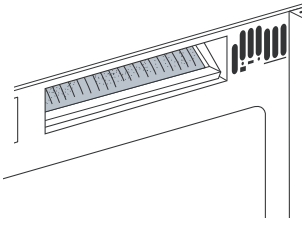

5 Slide the bottom of the vent cover into place. Push the top until it snaps into place. Tighten the vent grille screw in place.

6 Close the oven door, plug in the power cord.

us_main.book.book Page 36 Monday, October 18, 2021 10:34 AM

TROUBLESHOOTING

FAQs

Frequently Asked Questions

Q: Will the oven be damaged if it operates while empty?

A: Yes. Never operate the oven while it is empty or without the glass tray.

Q: Does microwave energy pass through the viewing screen in the door?

A: No. The metal screen bounces the energy back to the oven cavity. The holes (or ports) allow only light to pass through. They do not let microwave energy pass through.

Q: Why do I see a light reflection around the outer case?

A: This light is from the oven light which is located between the oven cavity and the outer wall of the oven.

Q: What are the various sounds I hear when the oven is operating?

A: The clicking sound is caused by a mechanical switch turning the microwave oven's magnetron ON and OFF.
The heavy hum and clunk is from the change in power the magnetron draws as it is turned ON and OFF by a mechanical switch. The change in blower speed is from the change in line voltage caused by the magnetron being turned ON and OFF.

Q: Can my oven be damaged if food is cooked for too long?

A: Like any other cooking appliance, it is possible to overcook food to the point that the food creates smoke and even possibly fire, and damages the inside of the oven. It is always best to be near the oven while you are cooking.

Q: Why is a standing time recommended after microwave cooking time is over?

A: Standing time allows foods to continue cooking evenly for a few minutes after the actual microwave oven cooking cycle. The amount of standing time depends upon the density of the foods.

Q: Why is additional time required for cooking food stored in the refrigerator?

A: As in conventional cooking, the initial temperature of food affects total cooking time. You need more time to cook food taken out of a refrigerator than for food at room temperature.

Q: Sometimes the door of my oven appears wavy. Is this normal?

A: This appearance is normal and does not affect the operation of your oven.

Q: Why does the glass tray not move?

A: The correct side of the tray should be facing up and the tray should sit firmly on the center hub. The support is not operating correctly. Reinstall the glass tray and restart the oven. Cooking without the glass tray can give you poor results.

Q: Why does the dish become hot when I microwave food in it? I thought that this should not happen.

A: As the food becomes hot it will conduct the heat to the dish. Use hot pads to remove food after cooking.

Q: What does standing time mean?

A: Standing time means that food should be taken out of the oven and covered for additional time after cooking. This process allows the cooking to finish, saves energy, and frees the oven for other purposes.

us_main.book.book Page 37 Monday, October 18, 2021 10:34 AM

Q: Can I pop popcorn in my oven? How do I get the best results?

A: Yes. Pop packaged microwave popcorn following manufacturer's guidelines or use the preprogrammed Popcorn button.
Do not use regular paper bags. Use the listening test by stopping the oven as soon as the popping slows to a pop every one or two seconds. Do not try to repop unpopped kernels. You can also use special microwave poppers. When using a popper, be sure to follow manufacturer's directions. Do not pop popcorn in glass utensils.

Q: Why does steam come out of the air exhaust vent?

A: Steam is normally produced during cooking. The oven has been designed to vent steam out of the vent.

Q: During convection cooking the fan stops when I open the door. Is that normal?

A: Yes, this is normal. When the door is opened, the convection fan will stop until the door is closed.

Q: Why aren't the function buttons working?

A: Make sure that the oven is not in Control Lock mode. The lock will show in the display if Control Lock is activated. To deactivate Control Lock, press and hold **CLEAR/OFF** for three seconds.

us_main.book.book Page 38 Monday, October 18, 2021 10:34 AM

Before Calling for Service

Operation

Problem	Possible Cause & Solution
Microwave oven does not start	**Power cord is unplugged, door is open, or cooking time has not been set.** • Plug in power cord. Or, check for a blown circuit fuse or a tripped main circuit breaker. • Close oven door. • Set cooking time.
	Timer function started. • If the display shows a time counting down but the oven is not cooking, check to see if a **Timer** function has been started instead of a cooking function.
	A fuse in your home may be blown or the circuit breaker tripped. Or the appliance is connected to a GFCI (Ground Fault Circuit Interrupter) outlet, and the outlet's circuit breaker has tripped. • Check the main electrical box and replace the fuse or reset the circuit breaker. Do not increase fuse capacity. If the problem is a circuit overload, have it corrected by a qualified electrician. • Reset the circuit breaker on the GFCI. If the problem persists, contact an electrician.
Oven light does not work	**Power cord is unplugged.** • Plug in power cord.
Arcing or Sparking	**Cookware is not microwave safe, or the oven is being operated while it is empty.** • Use microwave-safe cookware. When in doubt, test cookware before use. • Do not operate oven while it is empty.
	Wire twist-ties have not been removed from paper or plastic bags, or the metal rack was installed improperly. • Remove wire twist-ties from paper or plastic bags. • Place the rack securely in the four plastic supports.
Incorrect Time of Day	**Power interruption.** • Reset the time. See Setting the Clock section to reset time of day.
Unevenly Cooked Foods	**Cookware is not microwave safe, or cook settings were wrong.** • Test cookware to make sure it is microwave safe. • Do not cook without the glass tray. • Turn or stir food while cooking. • Defrost food completely before cooking. • Use correct cook time and power level. • Check position of aluminum strips used to prevent overcooking.
Overcooked Foods	**Cooking settings and methods are wrong.** • Change cook time or power level.
Undercooked Foods	**Cookware is not microwave safe, or cook settings were wrong.** • Test that cookware is microwave safe. • Defrost food completely before cooking. • Change cook time or power level. • Make sure that ventilation ports are not blocked.

us_main.book.book Page 39 Monday, October 18, 2021 10:34 AM

Problem	Possible Cause & Solution
Improper Defrosting	**Cookware is not microwave safe, or cook settings were wrong.** • Test that cookware is microwave safe. • Change defrost time or weight. • Turn or stir food during defrost cycle.
Food does not bake or roast properly	**Oven controls improperly set.** • See the Operation chapter.
	Incorrect cookware or cookware of improper size being used. • See the Operation chapter.
Moisture collects on oven window or steam comes from oven vent	**This happens when cooking foods high in moisture.** • This is normal.
Control panel light is not working (on some models)	**The LEDs on the control panel turn off after a few minutes to save energy.** • Press any key to activate the control panel. If the controls are idle for a few minutes, the LEDs will turn off again automatically.

Wi-Fi

Problem	Possible Cause & Solution
Trouble connecting appliance and smartphone to Wi-Fi network	**The password for the Wi-Fi network was entered incorrectly.** • Delete your home Wi-Fi network and begin the connection process again.
	Mobile data for your smartphone is turned on. • Turn off the Mobile data on your smartphone before connecting the appliance.
	The wireless network name (SSID) is set incorrectly. • The wireless network name (SSID) should be a combination of English letters and numbers. (Do not use special characters.)
	The router frequency is not 2.4 GHz. • Only a 2.4 GHz router frequency is supported. Set the wireless router to 2.4 GHz and connect the appliance to the wireless router. To check the router frequency, check with your Internet service provider or the router manufacturer.
	The appliance is too far from the router. • If the appliance is too far from the router, the signal may be weak and the connection may not be configured correctly. Move the router closer to the appliance or purchase and install a Wi-Fi repeater.
	During Wi-Fi setup, the app is requesting a password to connect to the product (on certain phones). • Locate the network name which starts with "LG" under Settings > Networks. Note the last part of the network name. - If the network name looks like LGE_Appliance_XX-XX-XX, enter lge12345. - If the network name looks like LGE_Appliance_XXXX, enter XXXX twice as your password. For example, if the network name appears as LGE_Appliance_8b92, then you would enter 8b928b92 as your password. In this instance, the password is case sensitive and the last 4 characters are unique to your appliance.

us_main.book.book Page 40 Monday, October 18, 2021 10:34 AM

LIMITED WARRANTY

USA

TERMS AND CONDITIONS

ARBITRATION NOTICE: THIS LIMITED WARRANTY CONTAINS AN ARBITRATION PROVISION THAT REQUIRES YOU AND LG ELECTRONICS ("LG") TO RESOLVE DISPUTES BY BINDING ARBITRATION INSTEAD OF IN COURT, UNLESS YOU CHOOSE TO OPT OUT. IN ARBITRATION, CLASS ACTIONS AND JURY TRIALS ARE NOT PERMITTED. PLEASE SEE THE SECTION TITLED "PROCEDURE FOR RESOLVING DISPUTES" BELOW.

Should your LG Microwave Oven ("Product") fail due to a defect in materials or workmanship under normal and proper use, during the warranty period set forth below, LG will, at its option, repair or replace the Product. This limited warranty is valid only to the original retail purchaser of the Product ("You") and applies only when purchased lawfully and used within the United States including U.S. Territories.

WARRANTY PERIOD		
Microwave Oven	**Magnetron Only**	**Inverter Magnetron Only**
Parts (internal/functional parts only) and Labor: One (1) year from the date of original retail purchase	Parts Only: Five (5) years from the date of original retail purchase You are responsible for any applicable labor cost.	Parts Only: Ten (10) years from the date of original retail purchase You are responsible for any applicable labor cost.

- Replacement Products and parts are warranted for the remaining portion of the original warranty period or ninety (90) days, whichever is greater.
- Replacement Products and parts may be new, reconditioned, refurbished, or otherwise factory remanufactured.
- Replaced Product or part(s) will be the property of LG.
- Proof of original retail purchase specifying the Product model and date of purchase is required to obtain warranty service under this limited warranty.
- Warranty start date will be ninety (90) days from manufacture date absent valid proof of purchase.

EXCEPT TO THE EXTENT PROHIBITED BY APPLICABLE LAW, ANY IMPLIED WARRANTY OF MERCHANTABILITY OR FITNESS FOR A PARTICULAR PURPOSE ON THE PRODUCT IS LIMITED IN DURATION TO THE DURATION OF THE ABOVE LIMITED WARRANTY. UNDER NO CIRCUMSTANCES SHALL LG OR ITS U.S. DISTRIBUTORS/DEALERS BE LIABLE FOR ANY INDIRECT, INCIDENTAL, CONSEQUENTIAL, SPECIAL, OR PUNITIVE DAMAGES, INCLUDING, WITHOUT LIMITATION, LOST GOODWILL, LOST REVENUES OR PROFITS, WORK STOPPAGE, IMPAIRMENT OF OTHER GOODS, COST OF REMOVAL AND REINSTALLATION OF THE PRODUCT, LOSS OF USE, OR ANY OTHER DAMAGES WHETHER BASED IN CONTRACT, TORT, OR OTHERWISE. LG'S TOTAL LIABILITY, IF ANY, SHALL NOT EXCEED THE PURCHASE PRICE PAID BY YOU FOR THE PRODUCT.

SOME STATES DO NOT ALLOW THE EXCLUSION OR LIMITATION OF INCIDENTAL OR CONSEQUENTIAL DAMAGES OR LIMITATIONS ON HOW LONG AN IMPLIED WARRANTY LASTS, SO THE ABOVE EXCLUSIONS OR LIMITATIONS MAY NOT APPLY TO YOU. THIS LIMITED WARRANTY GIVES YOU SPECIFIC LEGAL RIGHTS AND YOU MAY ALSO HAVE OTHER RIGHTS THAT VARY FROM STATE TO STATE.

THIS LIMITED WARRANTY DOES NOT COVER:

- Service trips to deliver, pick up, or install, educate how to operate, correct wiring, or correct unauthorized repairs.
- Damage or failure of the Product to perform during power failures and interrupted or inadequate electrical service.

us_main.book.book Page 41 Monday, October 18, 2021 10:34 AM

- Damage or failure of the Product resulting from operating the Product in a corrosive atmosphere or contrary to the Product owner's manual.
- Damage or failure of the Product caused by accidents, pests and vermin, lightning, wind, fire, floods, acts of nature, or any other causes beyond the control of LG.
- Damage or failure of the Product caused by unauthorized modification or alteration, or if the Product is used for other than the intended purpose.
- Damage or failure of the Product caused by incorrect electrical current, voltage, or ventilation codes.
- Damage or failure of the Product caused by transportation, storage, and/or handling, including scratches, dents, chips, and/or other damage to the finish of the Product, unless such damage is reported within one (1) week of delivery.
- Damage or missing items to any display, open box, or discounted Product.
- Refurbished Product or any Product sold "As Is", "Where Is", "With all Faults", or similar disclaimer.
- Products with original serial numbers that have been removed, altered, or cannot be readily determined.
- Increases in utility costs and additional utility expenses.
- Any noises associated with normal operation.
- Products used for other than normal and proper household use (e.g. commercial or industrial use, offices, and recreational facilities or vehicles) or contrary to the Product owner's manual.
- Costs associated with removal and reinstallation of the Product for repairs.
- Replacement of light bulbs, filters, or any consumable parts.
- The removal and reinstallation of the Product if it is installed in an inaccessible location or is not installed in accordance with the Product owner's manual.
- Damage or failure of the Product resulting from misuse, abuse, improper installation, repair, or maintenance. Improper repair includes the use of parts not authorized by LG. Improper installation or maintenance includes installation or maintenance contrary to the Product owner's manual.
- Damage or failure of the Product caused by the use of parts, components, accessories, consumable cleaning products, any other products, or services that are not authorized by LG.
- Shelves, drawers, handle and accessories, except for internal/functional parts covered under this limited warranty.
- The cost of repair or replacement under these excluded circumstances shall be borne by You.

TO OBTAIN WARRANTY SERVICE AND ADDITIONAL INFORMATION

Call 1-800-243-0000 and select the appropriate option from the menu.

Or visit our website at http://www.lg.com

Or by mail: LG Electronics Customer Service P.O. Box 240007 Huntsville, AL 35813 ATTN: CIC

NOT COVERED BY WARRANTY

Problem	Cause	Solution
Unit has no power	• House power turned off (power supply) • Tripped breaker. • The power cord is not installed properly.	• Check house power supply. • Check proper power cord connection. • Check extension cord.
Spark / Arcing	Aluminum foil or metal utensil used in microwave mode.	• Check user instructions. • DO NOT use aluminum foil or metal utensils in microwave mode.

us_main.book.book Page 42 Monday, October 18, 2021 10:34 AM

Problem	Cause	Solution
Microwave oven installation issue. • Vibration noise • Unit is not level • Installation damage	• Mounting bracket screw not fixed completely. • Mounting plate not aligned. - 3/16" Hole on Studs, 5/8" Hole on Drywall Only 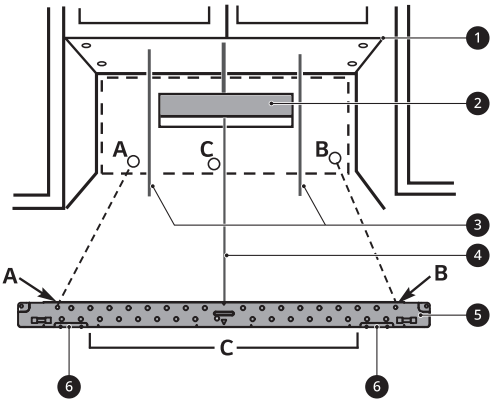 ❶ Minimum 66" from the floor ❷ For Wall Venting Only ❸ Draw Lines on Studs ❹ Draw Center Line ❺ Mounting Plate ❻ Support Tab 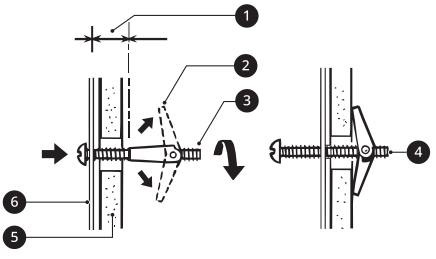 ❶ Space More Than Wall Thickness ❷ Toggle Wings ❸ Toggle Bolt ❹ Bolt End ❺ Wall ❻ Mounting Plate • Product carried/installed improperly.	Check with installer first.

us_main.book.book Page 43 Monday, October 18, 2021 10:34 AM

Problem	Cause	Solution
Vent is not working. • Weak or no ventilation. • Abnormal noise during operation. • Product overheating.	• Improper blower unit direction or installation. • Improper ductwork or damper connection. 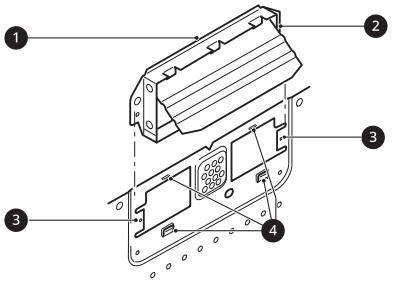 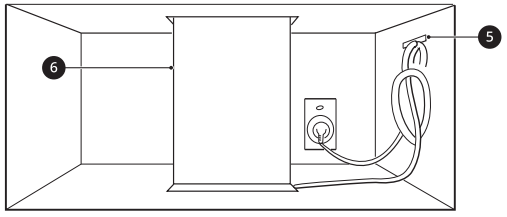 ❶ Exhaust Adapter ❷ Damper (hinge side up) ❸ Guides ❹ Locking Tabs ❺ Cable Clamping for Power Cord ❻ Duct	• Check blower unit direction and reinstall if necessary. • Properly align the exhaust operation ports and blower plate opening. • Blower unit exhaust ports should be completely exposed to the outside. • After installation, check the air ventilation path

PROCEDURE FOR RESOLVING DISPUTES:

ALL DISPUTES BETWEEN YOU AND LG ARISING OUT OF OR RELATING IN ANY WAY TO THIS LIMITED WARRANTY OR THE PRODUCT SHALL BE RESOLVED EXCLUSIVELY THROUGH BINDING ARBITRATION, AND NOT IN A COURT OF GENERAL JURISDICTION. BINDING ARBITRATION MEANS THAT YOU AND LG ARE EACH WAIVING THE RIGHT TO A JURY TRIAL AND TO BRING OR PARTICIPATE IN A CLASS ACTION.

Definitions. For the purposes of this section, references to "LG" mean LG Electronics U.S.A., Inc., its parents, subsidiaries and affiliates, and each of their officers, directors, employees, agents, beneficiaries, predecessors in interest, successors, assigns and suppliers; references to "dispute" or "claim" shall include any dispute, claim or controversy of any kind whatsoever (whether based in contract, tort, statute, regulation, ordinance, fraud, misrepresentation or any other legal or equitable theory) arising out of or relating in any way to the sale, condition or performance of the product or this Limited Warranty.

Notice of Dispute. In the event you intend to commence an arbitration proceeding, you must first notify LG in writing at least 30 days in advance of initiating the arbitration by sending a letter to LG at LG Electronics, USA, Inc. Attn: Legal Department- Arbitration 111 Sylvan Ave, Englewood Cliffs, NJ 07632. You and LG agree to engage in good faith discussions in an attempt to amicably resolve your claim. The notice must provide your name, address, and telephone number; identify the product that is the subject of the claim; and describe the nature of the claim and the relief being sought. If you and LG are unable to resolve the dispute within 30 days, either party may proceed to file a claim for arbitration.

Agreement to Binding Arbitration and Class Action Waiver. Upon failure to resolve the dispute during the 30 day period after sending written notice to LG, you and LG agree to resolve any claims between us only by binding arbitration on an individual basis, unless you opt out as provided below. Any dispute between you and LG shall not be combined or consolidated with a dispute involving any other person's or entity's product or claim. More specifically, without limitation of the foregoing, any dispute between you and LG shall not under any circumstances proceed as part of a class or representative action. Instead of

us_main.book.book Page 44 Monday, October 18, 2021 10:34 AM

arbitration, either party may bring an individual action in small claims court, but that small claims court action may not be brought on a class or representative basis.

Arbitration Rules and Procedures. To begin arbitration of a claim, either you or LG must make a written demand for arbitration. The arbitration will be administered by the American Arbitration Association ("AAA") and will be conducted before a single arbitrator under the AAA's Consumer Arbitration Rules that are in effect at the time the arbitration is initiated (referred to as the "AAA Rules") and under the procedures set forth in this section. The AAA Rules are available online at www.adr.org/consumer. Send a copy of your written demand for arbitration, as well as a copy of this provision, to the AAA in the manner described in the AAA Rules. You must also send a copy of your written demand to LG at LG Electronics, USA, Inc. Attn: Legal Department- Arbitration 111 Sylvan Avenue, Englewood Cliffs, NJ 07632. If there is a conflict between the AAA Rules and the rules set forth in this section, the rules set forth in this section will govern. This arbitration provision is governed by the Federal Arbitration Act. Judgment may be entered on the arbitrator’s award in any court of competent jurisdiction. All issues are for the arbitrator to decide, except that issues relating to the scope and enforceability of the arbitration provision and to the arbitrability of the dispute are for the court to decide. The arbitrator is bound by the terms of this provision.

Governing Law. The law of the state of your residence shall govern this Limited Warranty and any disputes between us except to the extent that such law is preempted by or inconsistent with applicable federal law.

Fees/Costs. You do not need to pay any fee to begin an arbitration. Upon receipt of your written demand for arbitration, LG will promptly pay all arbitration filing fees to the AAA unless you seek more than $25,000 in damages, in which case the payment of these fees will be governed by the AAA Rules. Except as otherwise provided for herein, LG will pay all AAA filing, administration and arbitrator fees for any arbitration initiated in accordance with the AAA Rules and this arbitration provision. If you prevail in the arbitration, LG will pay your attorneys' fees and expenses as long as they are reasonable, by considering factors including, but not limited to, the purchase amount and claim amount. Notwithstanding the foregoing, if applicable law allows for an award of reasonable attorneys' fees and expenses, an arbitrator can award them to the same extent that a court would. If the arbitrator finds either the substance of your claim or the relief sought in the demand is frivolous or brought for an improper purpose (as measured by the standards set forth in Federal Rule of Civil Procedure 11(b)), then the payment of all arbitration fees will be governed by the AAA Rules. In such a situation, you agree to reimburse LG for all monies previously disbursed by it that are otherwise your obligation to pay under the AAA Rules. Except as otherwise provided for, LG waives any rights it may have to seek attorneys' fees and expenses from you if LG prevails in the arbitration.

Hearings and Location. If your claim is for $25,000 or less, you may choose to have the arbitration conducted solely on the basis of (1) documents submitted to the arbitrator, (2) through a telephonic hearing, or (3) by an in-person hearing as established by the AAA Rules. If your claim exceeds $25,000, the right to a hearing will be determined by the AAA Rules. Any in-person arbitration hearings will be held at a location within the federal judicial district in which you reside unless we both agree to another location or we agree to a telephonic arbitration.

Opt Out. You may opt out of this dispute resolution procedure. If you opt out, neither you nor LG can require the other to participate in an arbitration proceeding. To opt out, you must send notice to LG no later than 30 calendar days from the date of the first consumer purchaser's purchase of the product by either: (i) sending an e-mail to optout@lge.com, with the subject line: "Arbitration Opt Out" or (ii) calling 1-800-980-2973. You must include in the opt out e-mail or provide by telephone: (a) your name and address; (b) the date on which the product was purchased; (c) the product model name or model number; and (d) the serial number (the serial number can be found (i) on the product; or (ii) online by accessing https://www.lg.com/us/support/repair-service/schedule-repair continued and clicking on "Find My Model & Serial Number").

You may only opt out of the dispute resolution procedure in the manner described above (that is, by e-mail or telephone); no other form of notice will be effective to opt out of this dispute resolution procedure.

Opting out of this dispute resolution procedure will not affect the coverage of the Limited Warranty in any way, and you will continue to enjoy the full benefits of the Limited Warranty. If you keep this product and do not opt out, then you accept all terms and conditions of the arbitration provision described above.

us_main.book.book Page 45 Monday, October 18, 2021 10:34 AM

us_main.book.book Page 46 Monday, October 18, 2021 10:34 AM

us_main.book.book Page 47 Monday, October 18, 2021 10:34 AM

us_main.book.book Page 48 Monday, October 18, 2021 10:34 AM

LG
Life's Good

LG Customer Information Center	
1-800-243-0000	USA
Register your product Online!	
www.lg.com	