SGS Korea Co., Ltd.
4, LS-ro 182beon-gil, Gunpo-si, Gyeonggi-do, Korea, 15807
Tel. +82 31 428 5700 / Fax. +82 31 427 2370
http://www.sgsgroup.kr

TEST REPORT

of

FCC Part 22 Subpart C/H, and Part 90 Subpart S
IC RSS-132 Issue 4 and RSS-Gen Issue 5

FCC ID: : BEJTFGMEIBBCD1
IC Certification: 2703H-TFGMEIBBCD1

Equipment Under Test	:	Telematics
Model Name	:	TFGMEIBBCD1
Variant Model Name(s)	:	Refer to the page 3
Applicant	:	FCC: LG Electronics USA, Inc. IC: LG ELECTRONICS INC.
Manufacturer	:	LG Electronics Inc.
Date of Receipt	:	2024.05.08
Date of Test(s)	:	2024.06.07 ~ 2024.07.18
Date of Issue	:	2024.07.23

In the configuration tested, the EUT complied with the standards specified above. This test report does not assure KOLAS accreditation.

1) The results of this test report are effective only to the items tested.
2) The SGS Korea is not responsible for the sampling, the results of this test report apply to the sample as received.
3) This test report cannot be reproduced, except in full, without prior written permission of the Company.
4) The data marked ※ in this report was provided by the customer and may affect the validity of the test results.

We are responsible for all the information of this test report except for the data(※) provided by the customer.

Tested by: Youngbin Kim

Technical Manager: Jinhyoung Cho

SGS Korea Co., Ltd. Gunpo Laboratory

INDEX

Table of Contents Page

1. General Information ---------- 3

2. E.R.P. / E.I.R.P. & Radiated Spurious Emission ---------- 12

3. Conducted Output Power ---------- 20

4. Occupied Bandwidth ---------- 27

5. Peak-Average Ratio ---------- 34

6. Spurious Emissions at Antenna Terminal ---------- 42

7. Band Edge and Emission Mask ---------- 46

8. Frequency Stability ---------- 68

1. General Information

1.1. Testing Laboratory

SGS Korea Co., Ltd. (Gunpo Laboratory)
- 10-2, LS-ro 182beon-gil, Gunpo-si, Gyeonggi-do, Korea, 15807
- 4, LS-ro 182beon-gil, Gunpo-si, Gyeonggi-do, Korea, 15807
- Designation number: KR0150

All SGS services are rendered in accordance with the applicable SGS conditions of service available on request and accessible at http://www.sgs.com/en/Terms-and-Conditions.aspx.

Phone No. : +82 31 688 0901
Fax No. : +82 31 688 0921

1.2. Details of Applicant

FCC Applicant : LG Electronics USA, Inc.
FCC Address : 111 Sylvan Avenue, North Building, Englewood Cliffs, New Jersey, United States, 07632
IC Applicant : LG ELECTRONICS INC.
IC Address : 222, LG-ro, Jinwi-myeon, Pyeongtaek-si, Gyeonggi-do, Korea (Republic of), 451-713
Contact Person : Kim, David
Phone No. : +1 201 470 2696

1.3. Details of Manufacturer

Company : LG Electronics Inc.
Address : 128, Yeoui-daero, Yeongdeungpo-gu, Seoul, Republic of Korea, 07336

1.4. Description of EUT

Kind of Product	Telematics
Model Name	TFGMEIBBCD1
Variant Model Name	TFGMEIBBCD2, TFGMEIBBCD3
Serial Number	Conducted: 351015130017455 Radiated: 359381640005774
Power Supply	DC 13.5 V
Rated Power	LTE Band 26 : 24 ㎧ m
Frequency Range	LTE Band 26(FCC Only): 814 ㎒ ~ 824 ㎒ LTE Band 26: 824 ㎒ ~ 849 ㎒
Modulation Technique	QPSK, 16QAM, 64QAM
Antenna Type	Internal: Planar Inverted F Antenna External: Metal Antenna
Antenna Gain※	Refer to the clause 1.15
H/W Version	Rev.D
S/W Version	SW175
FVIN	SW170

1.5. Test Equipment List

Equipment	Manufacturer	Model	S/N	Cal. Date	Cal. Interval	Cal. Due
Spectrum Analyzer	R&S	FSV30	100955	Mar. 08, 2024	Annual	Mar. 08, 2025
Spectrum Analyzer	Agilent	N9020A	MY53421758	Sep. 01, 2023	Annual	Sep. 01, 2024
Signal Generator	R&S	SMA100B	106887	Oct. 06, 2023	Annual	Oct. 06, 2024
DC Power Supply	R&S	HMP2020	102133	Apr. 23, 2024	Annual	Apr. 23, 2025
Communication Analyzer	Anritsu	MT8821C	6262094325	Mar. 05, 2024	Annual	Mar. 05, 2025
Temperature Chamber	ESPEC CORP.	PL-2J	15004184	Jun. 03, 2024	Annual	Jun. 03, 2025
Directional Coupler	KRYTAR	152613	122661	Feb. 27, 2024	Annual	Feb. 27, 2025
BRIDGE Coupler	MARK MICROWAVE INC	CBR16-0012	1542	May 13, 2024	Annual	May 13, 2025
Power Sensor	Anritsu	MA2411B	1207272	May 29, 2024	Annual	May 29, 2025
Power Meter	Anritsu	ML2495A	1223004	May 29, 2024	Annual	May 29, 2025
High Pass Filter	Wainwright Instrument GmbH	WHNX10-900-1000-18000-40-SS	7	Feb. 27, 2024	Annual	Feb. 27, 2025
Preamplifier	H.P.	8447F	2944A03909	Aug. 04, 2023	Annual	Aug. 04, 2024
Preamplifier	R&S	SCU 18F	101058	Dec. 07, 2023	Annual	Dec. 07, 2024
Test Receiver	R&S	ESU26	100109	Jan. 16, 2024	Annual	Jan. 16, 2025
Loop Antenna	Schwarzbeck Mess-Elektronik	FMZB 1519	1519-039	Aug. 21, 2023	Biennial	Aug. 21, 2025
Bilog Antenna	Schwarzbeck Mess-Elektronik	VULB9163	9163-437	May 29, 2024	Annual	May 29, 2025
Horn Antenna	R&S	HF906	100326	Feb. 19, 2024	Annual	Feb. 19, 2025
Antenna Master	Innco systems GmbH	MA4640-XP-ET	MA4640/536/383 30516/L	N.C.R.	N/A	N.C.R.
Turn Table	Innco systems GmbH	DS 1200S	N/A	N.C.R.	N/A	N.C.R.
Controller	Innco systems GmbH	CONTROLLER CO3000-4P	CO3000/963/383 30516/L	N.C.R.	N/A	N.C.R.
Anechoic Chamber	SY Corporation	L × W × H (9.6 m × 6.4 m × 6.6 m)	N/A	N.C.R.	N/A	N.C.R.
Coaxial Cable	RADIALL	TESTPRO 3	182287	Apr. 12, 2024	Semi-Annual	Oct. 12, 2024
Coaxial Cable	RADIALL	TESTPRO 3	182288	Apr. 12, 2024	Semi-Annual	Oct. 12, 2024
Coaxial Cable	RADIALL	TESTPRO 3	182291	Apr. 12, 2024	Semi-Annual	Oct. 12, 2024
Coaxial Cable	RF ONE	NMST-13A26-NMST-5m	TPC2402190004	Apr. 03, 2024	Semi-Annual	Oct. 03, 2024
Coaxial Cable	RF ONE	NMST-13A26-NMST-10m	TPC2402190001	Apr. 03, 2024	Semi-Annual	Oct. 03, 2024

Note;

- For equipment listed above that has a calibration date or calibration due date that falls within the test date range, care was taken to ensure that this equipment was used after the calibration date and before the calibration due date.

1.6. Summary of Test Results

The EUT has been tested according to the following specifications:

APPLIED STANDARD: FCC Part 22 and 90 / IC RSS-Gen Issue 5 and RSS-132 Issue 4			
Section in FCC	**Section in IC**	**Test Item(s)**	**Result**
§22.913(a)(5) §90.635(b)	RSS-132 Issue 4 5.4	E.R.P. / E.I.R.P.	Complied[1)]
§22.917(a) §90.691(a)	RSS-132 Issue 4 5.5	Radiated Spurious Emission	Complied[1)3)]
§2.1046	RSS-Gen Issue 5 6.12	Conducted Output Power	Complied[2)]
§2.1049	RSS-Gen Issue 5 6.7	Occupied Bandwidth	Complied[2)]
§22.913(d)	RSS-132 Issue 4 5.4	Peak-Average Ratio	Complied
§22.917(a) §90.691(a)	RSS-132 Issue 4 5.5	Spurious Emission at Antenna Terminal	Complied[2)]
§22.917(a) §90.691(a)	RSS-132 Issue 4 5.5	Band Edge and Emission Mask	Complied[2)]
§22.355 §90.213(a)	RSS-Gen Issue 5 6.11 RSS-132 Issue 4 5.3	Frequency Stability	Complied[2)]

Note;
1) The EUT has two antenna types (external, internal) and all antennas operated by one module.
2) The EUT uses same module with TM05FNNAGM0, so only spot check was performed for radiated spurious emissions and the rule was satisfied.
3) The EUT has four external antennas and additional radiated spurious emission test was performed with external antenna which has highest gain.

1.7. Sample Calculation for Offset

Where relevant, the following sample calculation is provided:

1.7.1. Conducted Test

Offset value (dB) = Directional Coupler (dB) + Cable loss (dB)

1.7.2. Radiation test

- E.I.R.P. (dB m) = Measured level (dBμV) + Antenna factor (dB/m) + Cable loss (dB) + 20 Log D - 104.8; where D is the measurement distance in meters.
- E.R.P. (dB m) = E.I.R.P. (dB m) - 2.15 (dB)

1.8. Introduction of Test Data Reuse

This report referenced from the FCC ID: BEJTM05FNNAGM0 and IC Certification: 2703H-TM05FNNAGM0. The applicant takes full responsibility that the test data as referenced in this report represent compliance for this FCC ID and IC Certification.

1.9. Difference

Model name	Description
TM05FNNAGM0	- Reference model - Single modular
TFGMEIBBCD1	- Host equipment - Same to reference model except below - With external case - Internal antenna

1.10. Spot Check Data

After confirming through preliminary radiated spurious emissions in the band that the performance of the FCC ID: BEJTM05FNNAGM0 and IC Certification: 2703H-TM05FNNAGM0 remains representative of FCC ID: BEJTFGMEIBBCD1 and IC Certification: 2703H-TFGMEIBBCD1.
The test data of FCC ID: BEJTM05FNNAGM0 and IC Certification: 2703H-TM05FNNAGM0 being submitted for this application to cover LTE features.

Band	Test item	Frequency (㎒)	Limit	Original model	Spot check model	Deviation (㏈)	Remark
				TM05FNNAGM0	TFGMEIBBCD1		
				FCC ID: BEJTM05FNNAGM0 IC Certification: 2703H-TM05FNNAGM0	FCC ID: BEJTFGMEIBBCD1 IC Certification: 2703H-TFGMEIBBCD1		
LTE26 Part22	Radiated Spurious Emissions	824 ~ 849	-13 ㏈m	Not detected	Not detected	-	-
LTE26 Part90	Radiated Spurious Emissions	814 ~ 824	-13 ㏈m	Not detected	Not detected	-	-

Note;
Comparison of two models, upper deviation is within 3 ㏈ range and all test results are under FCC/IC technical limits.

1.11. Reference Detail

Reference applicant that contains the reused reference data in the individual test reports:

Equipment class	Reference FCC ID and IC Certification	Application type	Reference test report number	Exhibit type	Variant test report number	Data reuse
PCB	FCC ID: BEJTM05FNNAGM0 IC Certification: 2703H-TM05FNNAGM0	Original grant	F690501-RF-RTL005226 (LTE)	Test report	F690501-RF-RTL005275 (LTE)	All
			F690501-RF-RTL005227 (NR FDD)		F690501-RF-RTL005276 (NR FDD)	
			F690501-RF-RTL005228 (NR TDD)		F690501-RF-RTL005277 (NR TDD)	

1.12. Worst Case Configuration and Mode

The worst-case is based on the conducted output power measurement investigation results. All testing was performed using QPSK, 16QAM and 64QAM modulations. However, the spurious radiated emission and spurious at antenna terminal were only performed on bandwidth and RB offset (with RB size 1) with the highest conducted power in QPSK.

The radiation test of the EUT was investigated in three orthogonal orientations X, Y, and Z, and the worst case data is reported.

1.13. Manufacturer Declaration

The EUT supports two ports and LTE and 5G NR FDD bands support only port 1. The 5G NR TDD (n41, n77, n78) band supports both port 1 and port 2

1.14. Measurement Configuration

Test Items	Band	Test Channel			Bandwidth (㎒)						Modulation			RB #		
		Low	Mid	High	1.4	3	5	10	15	20	QPSK	16QAM	64QAM	1	Half	Full
Conducted Power	26 Part22	V	V	V	V	V	V	V	V		V	V	V	V	V	V
	26 Part90	V	V	V	V	V	V	V	V		V	V	V	V	V	V
Frequency Stability	26 Part22	–	V	–	–	–	V	–	–		V	–	–	-	-	V
	26 Part90	–	V	–	–	–	V	–	–		V	–	–	-	-	V
Occupied Bandwidth	26 Part22	V	V	V	V	V	V	V	V		V	V	–	–	–	V
	26 Part90	V	V	V	V	V	V	V	V		V	V	–	–	–	V
Peak-to-Average Ratio	26 Part22	V	V	V	V	V	V	V	V		V	V	V	–	–	V
	26 Part90	V	V	V	V	V	V	V	V		V	V	V	–	–	V
Band edge	26 Part22	V	–	V	V	V	V	V	V		V	V	–	V	–	V
	26 Part90	V	–	V	V	V	V	V	V		V	V	–	V	–	V
Spurious at antenna terminal & Spurious Radiated Emission	26 Part22	V	V	V	worst case											
	26 Part90	V	V	V	worst case											

1.15. Antenna Information

Band	Operating Frequency (㎒)	Antenna Peak Gain (㏈i)				
		Internal	External			
			84933920	87832572	85015365	85015378
LTE 26 Part 90	814 ~ 824	0.75	0.37	**5.22**	0.73	1.05
LTE 26 Part 22	824 ~ 849	0.75	0.37	**5.22**	0.37	0.62

Note;
The radiated emission test was performed external antenna with highest gain.

1.16. Measurement Uncertainty

Where relevant, the following measurement uncertainty levels have been estimated for tests performed on the apparatus:

Parameter	Uncertainty	
Conducted Output Power	0.33 dB	
Occupied Bandwidth	0.05 MHz	
Conducted Spurious Emissions	0.99 dB	
Peak to Average Ratio	0.66 dB	
Frequency Stability	116 Hz	
Radiated Emission, 9 kHz to 30 MHz	H	3.60 dB
	V	3.60 dB
Radiated Emission, below 1 GHz	H	4.60 dB
	V	4.90 dB
Radiated Emission, above 1 GHz	H	3.90 dB
	V	3.80 dB

All measurement uncertainty values are shown with a coverage factor of *k*=2 to indicate a 95 % level of confidence.

1.17. Test Report Revision

Revision	Report Number	Date of Issue	Description
0	F690501-RF-RTL005275	2024.07.23	Initial

1.18. Emission Designator and Max Power

-Internal Antenna

Band	Band width (㎒)	Modulation	Low Freq. (㎒)	Upper Freq. (㎒)	Conducted Average (㏈ m)	Worst Ant. Gain (㏈ i)	E.R.P. Average (㏈ m)	E.R.P. Average (W)	Emission Designator
26/5 Part 22	1.4	QPSK	824.7	848.3	23.99	0.75	22.59	0.182	1M10G7D
		16QAM			23.40		22.00	0.158	1M09D7D
	3	QPSK	825.5	847.5	24.05		22.65	0.184	2M68G7D
		16QAM			23.59		22.19	0.166	2M68D7D
	5	QPSK	826.5	846.5	24.07		22.67	0.185	4M49G7D
		16QAM			23.45		22.05	0.160	4M49D7D
	10	QPSK	829.0	844.0	24.10		22.70	0.186	8M92G7D
		16QAM			23.66		22.26	0.168	8M92D7D
	15	QPSK	831.5	841.5	23.98		22.58	0.181	13M4G7D
		16QAM			23.39		21.99	0.158	13M5D7D
26 Part 90	1.4	QPSK	814.7	823.3	23.86	0.75	22.46	0.176	1M09G7D
		16QAM			23.37		21.97	0.157	1M09D7D
	3	QPSK	815.5	822.5	24.12		22.72	0.187	2M67G7D
		16QAM			23.63		22.23	0.167	2M68D7D
	5	QPSK	816.5	821.5	23.99		22.59	0.182	4M50G7D
		16QAM			23.58		22.18	0.165	4M49D7D
	10	QPSK	819.0		23.49		22.09	0.162	8M92G7D
		16QAM			22.71		21.31	0.135	8M94D7D
	15	QPSK	821.5		23.85		22.45	0.176	13M4G7D
		16QAM			23.09		21.69	0.148	13M5D7D

-External Antenna

Band	Band width (㎒)	Modulation	Low Freq. (㎒)	Upper Freq. (㎒)	Conducted Average (dB m)	Worst Ant. Gain (dB i)	E.R.P. Average (dB m)	E.R.P. Average (W)	Emission Designator
26/5 Part 22	1.4	QPSK	824.7	848.3	23.99	5.22	27.06	0.508	1M10G7D
		16QAM			23.40		26.47	0.444	1M09D7D
	3	QPSK	825.5	847.5	24.05		27.12	0.515	2M68G7D
		16QAM			23.59		26.66	0.463	2M68D7D
	5	QPSK	826.5	846.5	24.07		27.14	0.518	4M49G7D
		16QAM			23.45		26.52	0.449	4M49D7D
	10	QPSK	829.0	844.0	24.10		27.17	0.521	8M92G7D
		16QAM			23.66		26.73	0.471	8M92D7D
	15	QPSK	831.5	841.5	23.98		27.05	0.507	13M4G7D
		16QAM			23.39		26.46	0.443	13M5D7D
26 Part 90	1.4	QPSK	814.7	823.3	23.86	5.22	26.93	0.493	1M09G7D
		16QAM			23.37		26.44	0.441	1M09D7D
	3	QPSK	815.5	822.5	24.12		27.19	0.524	2M67G7D
		16QAM			23.63		26.70	0.468	2M68D7D
	5	QPSK	816.5	821.5	23.99		27.06	0.508	4M50G7D
		16QAM			23.58		26.65	0.462	4M49D7D
	10	QPSK	819.0		23.49		26.56	0.453	8M92G7D
		16QAM			22.71		25.78	0.378	8M94D7D
	15	QPSK	821.5		23.85		26.92	0.492	13M4G7D
		16QAM			23.09		26.16	0.413	13M5D7D

2. E.R.P. / E.I.R.P. & Radiated Spurious Emission

2.1. Test setup

The diagram below shows the test setup that is utilized to make the measurements for emission from 9 ㎑ to 30 ㎒.

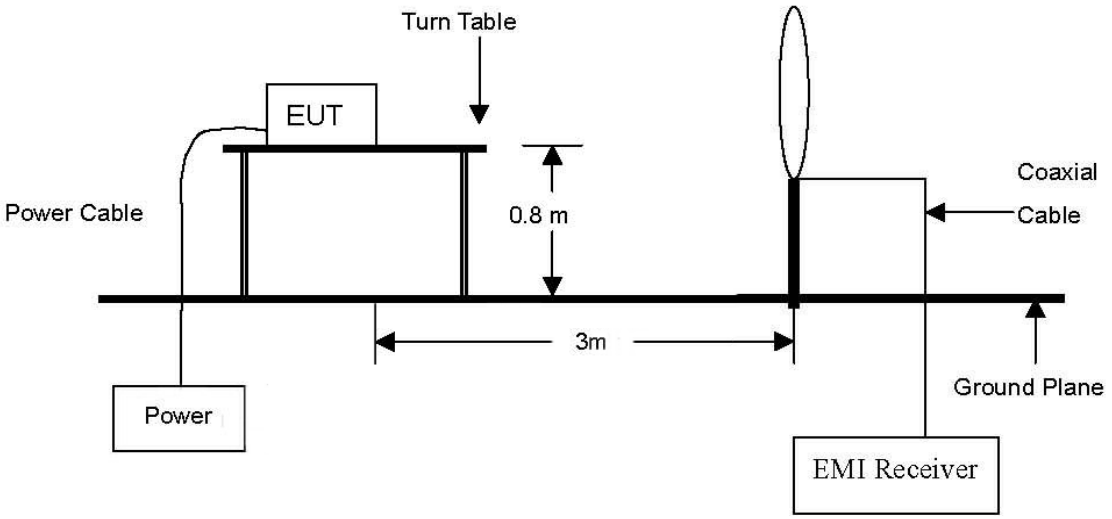

The diagram below shows the test setup that is utilized to make the measurements for emission from 30 ㎒ to 1 ㎓ Emissions.

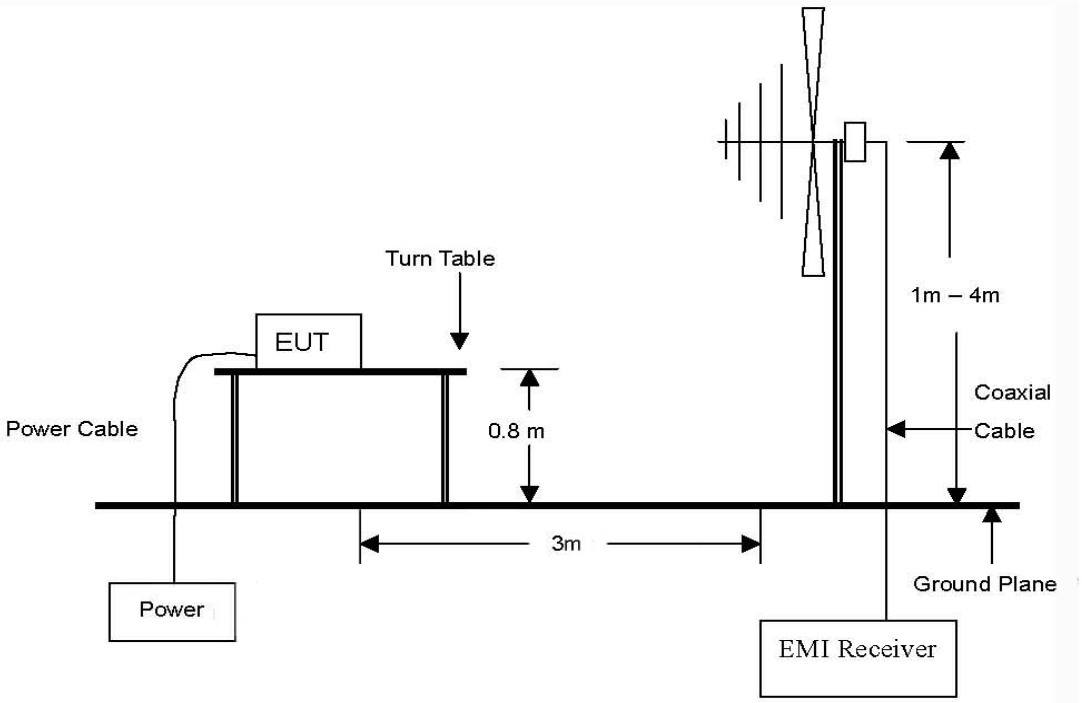

The diagram below shows the test setup that is utilized to make the measurements for emission from 1 ㎓ to 9 ㎓ Emissions.

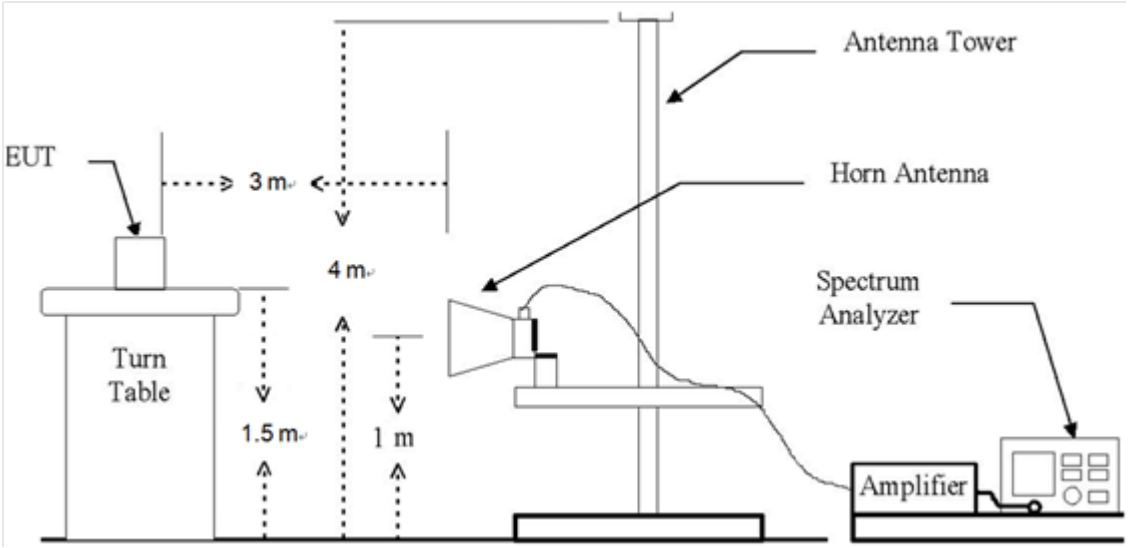

2.2. Limit

2.2.1. Limit of E.R.P. / E.I.R.P.

FCC
- §22.913(a)(5), the ERP of mobile transmitters and auxiliary test transmitters must not exceed 7 watts.

- §90.635(b), the maximum output power of the transmitter for mobile stations is 100 watts (20 dBW).

IC
- RSS-132 Issue 4
5.4, The transmitter output power shall be measured in terms of average power. The equivalent radiated power (e.r.p.) shall not exceed 7 watts for mobile equipment and 3 watts for portable equipment.
The effective isotropic radiated power (e.i.r.p.) shall not exceed the limits specified in SRSP-503 for base station equipment.

2.2.2. Limit of Radiated Spurious Emission

FCC
- §22.917(a), the power of any emission outside of the authorized operating frequency ranges must be attenuated below the transmitting power (P) by a factor of at least 43 + 10log(P) dB.

- §90.691(a), out-of-band emission requirement shall apply only to the “outer” channels included in an EA license and to spectrum adjacent to interior channels used by incumbent licensees. The emission limits are as follows:

(1) For any frequency removed from the EA licensee's frequency block by up to and including 37.5 ㎑, the power of any emission shall be attenuated below the transmitter power (P) in watts by at least 116 Log_{10} (f / 6.1) decibels or 50 + 10 Log_{10} (P) decibels or 80 decibels, whichever is the lesser attenuation, where f is the frequency removed from the center of the outer channel in the block in kilohertz and where f is greater than 12.5 ㎑.

(2) For any frequency removed from the EA licensee's frequency block greater than 37.5 ㎑, the power of any emission shall be attenuated below the transmitter power (P) in watts by at least 43 + 10 Log_{10} (P) decibels or 80 decibels, whichever is the lesser attenuation, where f is the frequency removed from the center of the outer channel in the block in kilohertz and where f is greater than 37.5 ㎑.

IC
- RSS-132 Issue 4
Equipment shall meet the unwanted emission limits specified below:

(i)In the first 1.0 MHz band immediately outside and adjacent to each of the sub-bands specified in Section 5.1, the power of emissions per any 1% of the occupied bandwidth shall be attenuated below the transmitter output power P (dBW) by at least 43 + 10 log(p) dB.

(ii) After the first 1.0 MHz immediately outside and adjacent to each of the sub-bands, the power of emissions in any 100 kHz bandwidth shall be attenuated below the transmitter output power P (dBW) by at least 43 + 10 log(p) dB. If the measurement is performed using 1% of the occupied bandwidth, power integration over 100 kHz is required.

p is the output power specified in watts

2.3. Test Procedure

2.3.1. E.R.P. / E.I.R.P. from conducted RF output power

According to subclause 5.2.5.5 of ANSI C63.26-2015 E.R.P. and E.I.R.P. are defined as the product of the power supplied to the antenna and its gain.

The relevant equation for determining the E.R.P. or E.I.R.P. from the conducted RF output power measured using the guidance provided above is:

E.R.P. or E.I.R.P. = $P_{Meas} + G_T$

where:
E.R.P. or E.I.R.P. = effective radiated power or equivalent isotropically radiated power, respectively (expressed in the same units as P_{Meas}, typically dBW or dBm);

P_{Meas} = measured transmitter output power or PSD, in dBm or dBW;

G_T = gain of the transmitting antenna, in dBd (ERP) or dBi (EIRP);

2.3.2. Radiated Output Power & Radiated Spurious Emissions

The test based on ANSI/TIA 603E: 2016 and ANSI C63.26-2015 and KDB 971168 D01 Power Meas License Digital Systems v03r01.

1. On a test site, the EUT shall be placed at 0.8 m or 1.5 m height on a turn table, and in the position close to normal use as declared by the applicant.
2. The test antenna shall be oriented initially for vertical polarization located 3 m from EUT to correspond to the fundamental frequency of the transmitter.
3. The output of the test antenna shall be connected to the measuring receiver and the peak detector is used for the measurement.
4. Radiated spurious emissions measurement method was set as follows:
   RBW = 100 ㎑ for emissions below 1 ㎓ and 1 ㎒ for emissions above 1 ㎓, VBW ≥ 3 x RBW,
   Detector = RMS, trace mode = max hold, per the guidelines of KDB 971168 D01 Power Meas License Digital Systems v03r01.
5. The transmitter shall be switched on, the measuring receiver shall be tuned to the frequency of the transmitter under test.
6. The test antenna shall be raised and lowered through the specified range of height until the maximum signal level is detected by the measuring receiver.
7. The transmitter shall be rotated through 360° in the horizontal plane, until the maximum signal level is detected by the measuring receiver.
8. The test antenna shall be raised and lowered again through the specified range of height until the maximum signal level is detected by the measuring receiver.
9. The maximum signal level detected by the measuring receiver shall be noted.
10. In necessary, the input attenuator setting on the measuring receiver shall be adjusted in order to increase the sensitivity of the measuring receiver.
11. The test antenna shall be raised and lowered through the specified range of height to ensure that the maximum signal is received.
12. The measurement shall be repeated with the test antenna orientated for horizontal polarization.

2.4. Test results

Ambient temperature : (23 ± 1) ℃
Relative humidity : 47 % R.H.

2.4.1. E.R.P. / E.I.R.P.

-Internal Antenna

Band	Frequency (㎒)	Maximum Conducted Power (㏈m)	Maximum Conducted Power (W)	Worst Antenna Gain (㏈i)	Maximum E.I.R.P. (㏈m)	Maximum E.I.R.P. (W)	Maximum E.R.P. (㏈m)	Maximum E.R.P. (W)	Limit
26 Part 22	824 ~ 849	24.10	0.257	0.75	24.85	0.305	22.70	0.186	7 W E.R.P.
26 Part 90	814 ~ 824	24.12	0.258	0.75	24.87	0.307	22.72	0.187	100 W

-External Antenna

Band	Frequency (㎒)	Maximum Conducted Power (㏈m)	Maximum Conducted Power (W)	Worst Antenna Gain (㏈i)	Maximum E.I.R.P. (㏈m)	Maximum E.I.R.P. (W)	Maximum E.R.P. (㏈m)	Maximum E.R.P. (W)	Limit
26 Part 22	824 ~ 849	24.10	0.257	5.22	29.32	0.855	27.17	0.521	7 W E.R.P.
26 Part 90	814 ~ 824	24.12	0.258	5.22	29.34	0.859	27.19	0.524	100 W

Remark;

1. E.I.R.P. (㏈m) = Maximum Conducted Power (㏈m) + Antenna Gain (㏈i)
2. E.R.P. (㏈m) = E.I.R.P. (㏈m) - 2.15 (㏈); where E.R.P. and E.I.R.P. are expressed in consistent units.

2.4.2. Radiated Spurious emission

-Internal Antenna

LTE band 26_Part 22 (10 ㎒ - QPSK)

Frequency (㎒)	Measured Level (dBμV)	Ant. Pol.	AF (dB/m)	AMP+CL (dB)	E (dBμV/m)	CF (dB)	E.R.P. (dB m)	Limit (dB m)	Margin (dB)
Low Channel (829.0 ㎒)									
1 662.60	61.16	H	26.03	-36.96	50.23	-97.41	-47.18	-13	34.18
1 662.50	60.70	V	26.03	-36.97	49.76	-97.41	-47.65	-13	34.65
2 493.80	67.07	H	28.38	-34.67	60.78	-97.41	-36.33	-13	23.63
2 493.50	62.05	V	28.37	-34.65	55.77	-97.41	-41.64	-13	28.64
Above 2 500.00	Not detected	–	–	–	–	–	–	–	–
Middle Channel (836.5 ㎒)									
1 677.50	61.57	H	26.30	-36.79	51.08	-97.41	-46.33	-13	33.33
1 674.55	60.45	V	26.24	-36.78	49.91	-97.41	-47.50	-13	34.50
2 516.90	68.60	H	28.47	-34.98	62.09	-97.41	-35.32	-13	22.32
2 516.15	67.22	V	28.46	-34.98	60.70	-97.41	-36.71	-13	23.71
Above 2 600.00	Not detected	–	–	–	–	–	–	–	–
High Channel (844.0 ㎒)									
1 692.60	63.12	H	26.57	-36.80	52.89	-97.41	-44.52	-13	31.52
1 692.50	62.37	V	26.57	-36.81	52.13	-97.41	-45.28	-13	32.28
2 538.85	68.72	H	28.56	-34.61	62.67	-97.41	**-34.74**	-13	21.74
2 538.80	66.28	V	28.56	-34.61	60.23	-97.41	-37.18	-13	24.18
Above 2 600.00	Not detected	–	–	–	–	–	–	–	–

LTE band 26_Part 90 (3 ㎒ - QPSK)

Frequency (㎒)	Measured Level (dBμV)	Ant. Pol.	AF (dB/m)	AMP+CL (dB)	E (dBμV/m)	CF (dB)	E.R.P. (dB m)	Limit (dB m)	Margin (dB)
Low Channel (815.5 ㎒)									
1 633.58	52.54	H	25.67	-37.07	41.14	-97.41	-56.27	-13	43.27
1 633.57	56.35	V	25.67	-37.07	44.95	-97.41	-52.46	-13	39.46
2 450.22	54.16	H	28.20	-34.81	47.55	-97.41	-49.86	-13	36.86
2 450.28	52.30	V	28.20	-34.81	45.69	-97.41	-51.72	-13	38.72
3 266.99	47.35	H	30.87	-33.74	44.48	-97.41	-52.93	-13	39.93
3 267.31	44.94	V	30.87	-33.74	42.07	-97.41	-55.34	-13	42.34
3 989.85	44.41	H	32.22	-32.71	43.92	-97.41	-53.49	-13	40.49
3 976.60	36.56	V	32.25	-32.92	35.89	-97.41	-61.52	-13	48.52
Above 4 000.00	Not detected	–	–	–	–	–	–	–	–
Middle Channel (819.0 ㎒)									
1 640.60	54.31	H	25.72	-37.11	42.92	-97.41	-54.49	-13	41.49
1 640.65	59.00	V	25.73	-37.11	47.62	-97.41	-49.79	-13	36.79
2 460.73	57.04	H	28.24	-34.29	50.99	-97.41	-46.42	-13	33.42
2 460.68	57.10	V	28.24	-34.29	51.05	-97.41	**-46.36**	-13	33.36
3 280.81	47.13	H	30.92	-33.80	44.25	-97.41	-53.16	-13	40.16
3 280.96	43.43	V	30.92	-33.79	40.56	-97.41	-56.85	-13	43.85
3 990.00	43.72	H	32.22	-32.71	43.23	-97.41	-54.18	-13	41.18
3 998.90	37.16	V	32.20	-32.56	36.80	-97.41	-60.61	-13	47.61
Above 4 000.00	Not detected	–	–	–	–	–	–	–	–
High Channel (822.5 ㎒)									
1 647.53	55.13	H	25.78	-37.13	43.78	-97.41	-53.63	-13	40.63
1 647.55	59.12	V	25.78	-37.13	47.77	-97.41	-49.64	-13	36.64
2 471.45	52.89	H	28.29	-33.75	47.43	-97.41	-49.98	-13	36.98
2 471.39	55.30	V	28.29	-33.75	49.84	-97.41	-47.57	-13	34.57
3 294.87	46.94	H	30.98	-33.74	44.18	-97.41	-53.23	-13	40.23
3 294.91	44.34	V	30.98	-33.74	41.58	-97.41	-55.83	-13	42.83
3 992.15	44.25	H	32.22	-32.66	43.81	-97.41	-53.60	-13	40.60
3 990.00	36.58	V	32.22	-32.71	36.09	-97.41	-61.32	-13	48.32
Above 4 000.00	Not detected	–	–	–	–	–	–	–	–

-External Antenna (87832572)

LTE band 26_Part 22 (10 ㎒ - QPSK)

Frequency (㎒)	Measured Level (dBμV)	Ant. Pol.	AF (dB/m)	AMP+CL (dB)	E (dBμV/m)	CF (dB)	E.R.P. (dB m)	Limit (dB m)	Margin (dB)
Low Channel (829.0 ㎒)									
Below 1 000.00	Not detected	–	–	–	–	–	–	–	–
Above 1 000.00	Not detected	–	–	–	–	–	–	–	–
Middle Channel (836.5 ㎒)									
Below 1 000.00	Not detected	–	–	–	–	–	–	–	–
Above 1 000.00	Not detected	–	–	–	–	–	–	–	–
High Channel (844.0 ㎒)									
Below 1 000.00	Not detected	–	–	–	–	–	–	–	–
Above 1 000.00	Not detected	–	–	–	–	–	–	–	–

LTE band 26_Part 90 (3 ㎒ - QPSK)

Frequency (㎒)	Measured Level (dBμV)	Ant. Pol.	AF (dB/m)	AMP+CL (dB)	E (dBμV/m)	CF (dB)	E.R.P. (dB m)	Limit (dB m)	Margin (dB)
Low Channel (815.5 ㎒)									
Below 1 000.00	Not detected	–	–	–	–	–	–	–	–
Above 1 000.00	Not detected	–	–	–	–	–	–	–	–
Middle Channel (819.0 ㎒)									
Below 1 000.00	Not detected	–	–	–	–	–	–	–	–
Above 1 000.00	Not detected	–	–	–	–	–	–	–	–
High Channel (822.5 ㎒)									
Below 1 000.00	Not detected	–	–	–	–	–	–	–	–
Above 1 000.00	Not detected	–	–	–	–	–	–	–	–

Remark;

1. AF = Antenna Factor, CL = Cable Loss, CF = Conversion Factor.
2. E (dBμV/m) = Measured Level (dBμV) + Antenna Factor (dB/m) + AMP (dB) + Cable Loss (dB).
3. E.I.R.P. (dB m) = E (dBμV/m) + CF (dB).
4. E.R.P. (dB m) = E (dBμV/m) + CF (dB) - 2.15 (dB); where E.R.P. and E.I.R.P. are expressed in consistent units.
5. CF (dB) = 20 log D - 104.8; where D is the measurement distance in meters, According to KDB 971168 D01 v03r01 5.8.4.
6. The frequency spectrum is examined from 9 ㎑ to the 10th harmonic of the fundamental frequency of the transmitter. No other spurious and harmonic emissions were reported greater than listed emissions above table.

3. Conducted Output Power

3.1. Limit

CFR 47, Section FCC §2.1046 and IC RSS-Gen Issue 5 6.12.

3.2. Test Procedure

Output power shall be measured at the RF output terminals for all configurations.

1. The RF output of the transmitter was connected to the input of the mobile test unit in order to establish communication with the EUT.
2. The EUT was set up for the max. output power with pseudo random data modulation by using mobile test unit parameters.
3. The measurement performed using a wideband RF power meter.
4. This EUT was tested under all configurations and the highest power was investigated and reported.

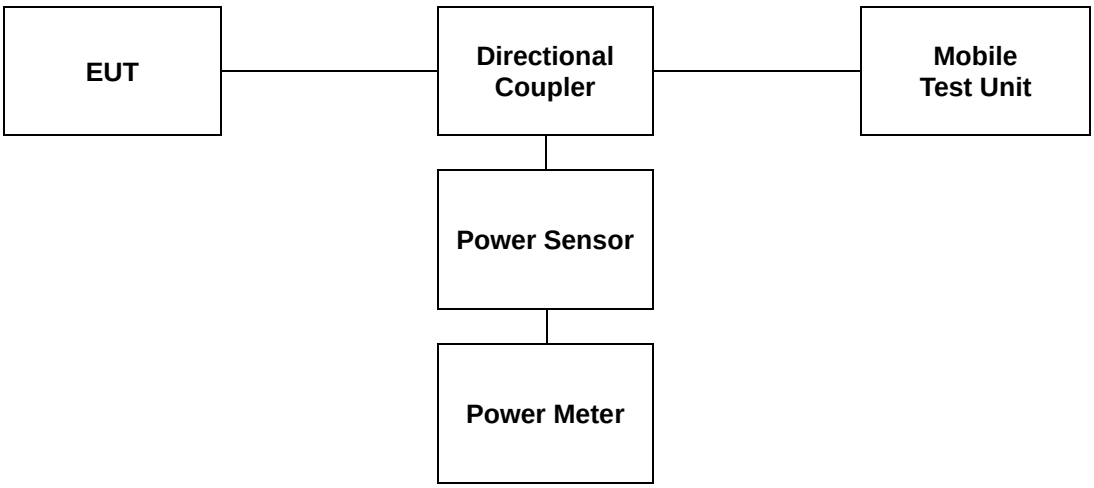

3.3. Test Result

Ambient temperature : (23 ± 1) ℃

Relative humidity : 47 % R.H.

LTE Band 26_part 22									
Bandwidth (㎒)	Modulation	RB Size	RB Offset	Conducted Output Power					
				26797 (824.7 ㎒)		26915 (836.5 ㎒)		27033 (848.3 ㎒)	
				(dBm)	(W)	(dBm)	(W)	(dBm)	(W)
1.4	QPSK	1	0	23.90	0.245	23.81	0.240	23.76	0.238
		1	2	**23.99**	**0.251**	23.83	0.242	23.76	0.238
		1	5	23.88	0.244	23.83	0.242	23.75	0.237
		3	0	23.90	0.245	23.84	0.242	23.58	0.228
		3	2	23.96	0.249	23.91	0.246	23.74	0.237
		3	3	23.89	0.245	23.90	0.245	23.75	0.237
		6	0	23.05	0.202	23.01	0.200	22.81	0.191
	16QAM	1	0	23.25	0.211	23.33	0.215	23.23	0.210
		1	3	**23.40**	**0.219**	23.31	0.214	23.13	0.206
		1	5	23.40	0.219	23.22	0.210	23.11	0.205
		3	0	23.09	0.204	23.14	0.206	23.17	0.207
		3	2	23.15	0.207	23.44	0.221	23.12	0.205
		3	3	23.06	0.202	23.30	0.214	23.30	0.214
		6	0	22.35	0.172	22.45	0.176	22.36	0.172
	64QAM	1	0	22.01	0.159	22.13	0.163	22.18	0.117
		1	2	22.04	0.160	22.10	0.162	22.05	0.132
		1	5	22.01	0.159	22.10	0.162	22.06	0.118
		3	0	22.03	0.160	22.13	0.163	21.27	0.134
		3	2	22.09	0.162	**22.27**	**0.169**	21.23	0.133
		3	3	22.08	0.161	22.19	0.166	21.29	0.135
		6	0	21.05	0.127	21.33	0.136	21.28	0.134

LTE Band 26_part 22									
Bandwidth (㎒)	Modulation	RB Size	RB Offset	Conducted Output Power					
				26805 (825.5 ㎒)		26915 (836.5 ㎒)		27025 (847.5 ㎒)	
				(dBm)	(W)	(dBm)	(W)	(dBm)	(W)
3	QPSK	1	0	23.90	0.245	24.00	0.251	23.81	0.240
		1	7	24.03	0.253	23.95	0.248	23.74	0.237
		1	14	**24.05**	**0.254**	23.95	0.248	23.74	0.237
		8	0	23.16	0.207	23.02	0.200	22.99	0.199
		8	4	23.20	0.209	23.09	0.204	23.00	0.200
		8	7	23.13	0.206	22.99	0.199	22.94	0.197
		15	0	23.00	0.200	23.04	0.201	22.99	0.199
	16QAM	1	0	23.27	0.212	23.25	0.211	23.26	0.212
		1	7	**23.59**	**0.229**	23.59	0.229	23.08	0.203
		1	14	23.52	0.225	23.47	0.222	22.99	0.199
		8	0	22.25	0.168	22.11	0.163	22.11	0.163
		8	4	22.37	0.173	22.17	0.165	22.17	0.165
		8	7	22.35	0.172	22.11	0.163	22.11	0.163
		15	0	22.08	0.161	22.09	0.162	22.09	0.162
	64QAM	1	0	22.23	0.167	22.22	0.167	22.26	0.134
		1	7	22.27	0.169	22.20	0.166	22.00	0.126
		1	14	**22.29**	**0.169**	22.08	0.161	22.03	0.127
		8	0	21.29	0.135	21.06	0.128	21.11	0.129
		8	4	21.25	0.133	21.12	0.129	21.19	0.132
		8	7	21.28	0.134	21.06	0.128	21.19	0.132
		15	0	21.08	0.128	21.05	0.127	21.12	0.129

LTE Band 26_part 22									
Bandwidth (㎒)	Modulation	RB Size	RB Offset	Conducted Output Power					
				26815 (825.5 ㎒)		26915 (836.5 ㎒)		27015 (846.5 ㎒)	
				(dB m)	(W)	(dB m)	(W)	(dB m)	(W)
5	QPSK	1	0	23.90	0.245	23.95	0.248	23.85	0.243
		1	12	24.05	0.254	23.99	0.251	23.57	0.228
		1	24	**24.07**	**0.255**	24.03	0.253	23.65	0.232
		12	0	23.13	0.206	23.14	0.206	22.85	0.193
		12	6	23.07	0.203	23.20	0.209	23.01	0.200
		12	13	23.13	0.206	23.19	0.208	22.91	0.195
		25	0	23.15	0.207	23.15	0.207	22.94	0.197
	16QAM	1	0	23.41	0.219	23.26	0.212	23.06	0.202
		1	12	23.20	0.209	23.24	0.211	22.85	0.193
		1	24	23.33	0.215	**23.45**	**0.221**	22.96	0.198
		12	0	22.33	0.171	22.29	0.169	21.95	0.157
		12	6	22.33	0.171	22.26	0.168	22.05	0.160
		12	13	22.25	0.168	22.26	0.168	22.02	0.159
		25	0	22.12	0.163	22.16	0.164	21.97	0.157
	64QAM	1	0	22.16	0.164	22.21	0.166	22.18	0.165
		1	12	22.17	0.165	**22.31**	**0.170**	21.77	0.150
		1	24	22.28	0.169	22.13	0.163	21.87	0.154
		12	0	21.30	0.135	21.24	0.133	21.07	0.128
		12	6	21.34	0.136	21.32	0.136	21.01	0.126
		12	13	21.35	0.136	21.17	0.131	21.27	0.134
		25	0	21.26	0.134	21.06	0.128	21.10	0.129

LTE Band 26_part 22									
Bandwidth (㎒)	Modulation	RB Size	RB Offset	Conducted Output Power					
				26840 (829.0 ㎒)		26915 (836.5 ㎒)		26990 (844.0 ㎒)	
				(dB m)	(W)	(dB m)	(W)	(dB m)	(W)
10	QPSK	1	0	23.95	0.248	24.01	0.252	23.96	0.249
		1	25	**24.10**	**0.257**	23.93	0.247	23.98	0.250
		1	49	24.05	0.254	24.10	0.257	23.59	0.229
		25	0	23.10	0.204	23.19	0.208	23.18	0.208
		25	12	23.08	0.203	23.13	0.206	23.19	0.208
		25	25	23.23	0.210	23.23	0.210	23.18	0.208
		50	0	22.96	0.198	22.96	0.198	23.01	0.200
	16QAM	1	0	23.36	0.217	23.57	0.228	**23.66**	**0.232**
		1	25	23.28	0.213	23.34	0.216	23.45	0.221
		1	49	23.57	0.228	23.57	0.228	22.86	0.193
		25	0	22.43	0.175	22.37	0.173	22.39	0.173
		25	12	22.40	0.174	22.43	0.175	22.25	0.168
		25	25	22.51	0.178	22.35	0.172	22.42	0.175
		50	0	22.27	0.169	22.07	0.161	22.08	0.161
	64QAM	1	0	22.31	0.170	**22.34**	**0.171**	22.21	0.166
		1	25	22.29	0.169	22.17	0.165	22.10	0.162
		1	49	22.27	0.169	22.34	0.171	22.19	0.166
		25	0	21.43	0.139	21.47	0.140	21.44	0.139
		25	12	21.44	0.139	21.29	0.135	21.20	0.132
		25	25	21.30	0.135	21.29	0.135	21.41	0.138
		50	0	21.39	0.138	21.27	0.134	21.22	0.132

LTE Band 26_part 22									
Bandwidth (㎒)	Modulation	RB Size	RB Offset	Conducted Output Power					
				26865 (831.5 ㎒)		-		26965 (841.5 ㎒)	
				(dB m)	(W)	-	-	(dB m)	(W)
15	QPSK	1	0	**23.98**	**0.250**	-	-	23.91	0.246
		1	36	23.97	0.249	-	-	23.97	0.249
		1	74	23.92	0.247	-	-	23.97	0.249
		36	0	23.16	0.207	-	-	23.21	0.209
		36	18	23.12	0.205	-	-	23.22	0.210
		36	37	23.15	0.207	-	-	23.16	0.207
		75	0	23.17	0.207	-	-	23.06	0.202
	16QAM	1	0	23.31	0.214	-	-	23.27	0.212
		1	36	**23.39**	**0.218**	-	-	23.37	0.217
		1	74	23.30	0.214	-	-	23.38	0.218
		36	0	22.40	0.174	-	-	22.22	0.167
		36	18	22.30	0.170	-	-	22.28	0.169
		36	37	22.37	0.173	-	-	22.27	0.169
		75	0	22.31	0.170	-	-	22.03	0.160
	64QAM	1	0	**22.24**	**0.167**	-	-	22.15	0.164
		1	36	22.20	0.166	-	-	22.18	0.165
		1	74	22.22	0.167	-	-	22.23	0.167
		36	0	21.35	0.136	-	-	21.23	0.133
		36	18	21.28	0.134	-	-	21.29	0.135
		36	37	21.38	0.137	-	-	21.32	0.136
		75	0	21.16	0.131	-	-	21.04	0.127

LTE Band 26_part 90									
Bandwidth (㎒)	Modulation	RB Size	RB Offset	Conducted Output Power					
				26697 (814.7 ㎒)		26740 (819.0 ㎒)		26783 (823.3 ㎒)	
				(dB m)	(W)	(dB m)	(W)	(dB m)	(W)
1.4	QPSK	1	0	23.49	0.223	23.74	0.237	23.80	0.240
		1	2	23.47	0.222	23.78	0.239	23.75	0.237
		1	5	23.34	0.216	23.44	0.221	23.72	0.236
		3	0	23.76	0.238	23.68	0.233	23.81	0.240
		3	2	23.74	0.237	**23.86**	**0.243**	23.74	0.237
		3	3	23.59	0.229	23.63	0.231	23.83	0.242
		6	0	22.81	0.191	22.61	0.182	22.93	0.196
	16QAM	1	0	23.13	0.206	23.03	0.201	23.20	0.209
		1	2	22.73	0.187	22.71	0.187	**23.37**	**0.217**
		1	5	22.61	0.182	23.07	0.203	23.34	0.216
		3	0	22.91	0.195	23.02	0.200	23.22	0.210
		3	2	22.94	0.197	22.95	0.197	23.20	0.209
		3	3	22.90	0.195	22.93	0.196	23.31	0.214
		6	0	22.19	0.166	22.25	0.168	22.25	0.168
	64QAM	1	0	21.21	0.132	20.96	0.125	21.68	0.147
		1	2	20.61	0.115	21.05	0.127	**21.69**	**0.148**
		1	5	20.49	0.112	20.98	0.125	21.65	0.146
		3	0	21.09	0.129	20.97	0.125	21.45	0.140
		3	2	21.02	0.126	21.12	0.129	21.41	0.138
		3	3	21.00	0.126	21.18	0.131	21.38	0.137
		6	0	20.04	0.101	20.61	0.115	20.79	0.120

LTE Band 26_part 90									
Bandwidth (㎒)	Modulation	RB Size	RB Offset	Conducted Output Power					
				26705 (815.5 ㎒)		26740 (819.0 ㎒)		26775 (822.5 ㎒)	
				(dB m)	(W)	(dB m)	(W)	(dB m)	(W)
3	QPSK	1	0	23.39	0.218	23.65	0.232	23.92	0.247
		1	7	23.42	0.220	23.57	0.228	24.03	0.253
		1	14	23.40	0.219	23.90	0.245	**24.12**	**0.258**
		8	0	22.83	0.192	22.83	0.192	23.02	0.200
		8	4	22.89	0.195	23.01	0.200	23.02	0.200
		8	7	22.85	0.193	23.01	0.200	23.03	0.201
		15	0	22.75	0.188	23.00	0.200	23.03	0.201
	16QAM	1	0	23.09	0.204	23.06	0.202	23.35	0.216
		1	7	22.75	0.188	22.87	0.194	23.41	0.219
		1	14	22.70	0.186	23.20	0.209	**23.63**	**0.231**
		8	0	22.12	0.163	21.96	0.157	22.08	0.161
		8	4	22.16	0.164	22.15	0.164	22.05	0.160
		8	7	22.14	0.164	22.07	0.161	22.13	0.163
		15	0	22.16	0.164	22.04	0.160	22.06	0.161
	64QAM	1	0	21.74	0.149	21.96	0.157	**21.98**	**0.158**
		1	7	21.65	0.146	21.70	0.148	21.83	0.152
		1	14	21.64	0.146	21.92	0.156	21.82	0.152
		8	0	21.04	0.127	19.92	0.098	21.06	0.128
		8	4	21.14	0.130	20.13	0.103	21.06	0.128
		8	7	21.15	0.130	20.33	0.108	21.05	0.127
		15	0	20.06	0.101	20.07	0.102	21.05	0.127

LTE Band 26_part 90									
Bandwidth (㎒)	Modulation	RB Size	RB Offset	Conducted Output Power					
				26715 (816.5 ㎒)		26740 (819.0 ㎒)		26765 (821.5 ㎒)	
				(dBm)	(W)	(dBm)	(W)	(dBm)	(W)
5	QPSK	1	0	23.39	0.218	23.66	0.232	**23.99**	**0.251**
		1	12	23.39	0.218	23.51	0.224	23.96	0.249
		1	24	23.40	0.219	23.75	0.237	23.90	0.245
		12	0	23.13	0.206	22.71	0.187	22.99	0.199
		12	6	22.87	0.194	22.89	0.195	23.07	0.203
		12	13	22.83	0.192	23.10	0.204	23.00	0.200
		25	0	22.75	0.188	22.82	0.191	23.06	0.202
	16QAM	1	0	23.05	0.202	22.78	0.190	23.27	0.212
		1	12	22.71	0.187	22.75	0.188	**23.58**	**0.228**
		1	24	22.74	0.188	23.00	0.200	23.55	0.226
		12	0	22.16	0.164	22.02	0.159	22.15	0.164
		12	6	22.15	0.164	22.18	0.165	22.09	0.162
		12	13	22.18	0.165	22.26	0.168	22.03	0.160
		25	0	22.18	0.165	21.91	0.155	22.01	0.159
	64QAM	1	0	21.38	0.137	21.33	0.136	21.46	0.140
		1	12	21.22	0.132	21.39	0.138	21.44	0.139
		1	24	21.59	0.144	21.55	0.143	**21.72**	**0.149**
		12	0	21.09	0.129	20.77	0.119	20.53	0.113
		12	6	20.93	0.124	20.94	0.124	21.00	0.126
		12	13	20.93	0.124	21.00	0.126	21.04	0.127
		25	0	20.93	0.124	19.83	0.096	20.79	0.120

LTE Band 26_part 90									
Bandwidth (㎒)	Modulation	RB Size	RB Offset	Conducted Output Power					
				-		26740 (819.0 ㎒)		-	
				-	-	(dBm)	(W)	-	-
10	QPSK	1	0	-	-	**23.49**	**0.223**	-	-
		1	25	-	-	23.33	0.215	-	-
		1	49	-	-	23.35	0.216	-	-
		25	0	-	-	22.83	0.192	-	-
		25	12	-	-	22.78	0.190	-	-
		25	25	-	-	22.69	0.186	-	-
		50	0	-	-	22.64	0.184	-	-
	16QAM	1	0	-	-	**22.71**	**0.187**	-	-
		1	25	-	-	22.59	0.182	-	-
		1	49	-	-	22.62	0.183	-	-
		25	0	-	-	21.89	0.155	-	-
		25	12	-	-	21.85	0.153	-	-
		25	25	-	-	21.69	0.148	-	-
		50	0	-	-	21.07	0.128	-	-
	64QAM	1	0	-	-	**21.27**	**0.134**	-	-
		1	25	-	-	21.15	0.114	-	-
		1	49	-	-	21.07	0.113	-	-
		25	0	-	-	20.74	0.119	-	-
		25	12	-	-	20.65	0.116	-	-
		25	25	-	-	20.66	0.116	-	-
		50	0	-	-	20.73	0.118	-	-

LTE Band 26_part 90									
Bandwidth (㎒)	Modulation	RB Size	RB Offset	Conducted Output Power					
				-		26765 (821.5 ㎒)		-	
				-	-	(dBm)	(W)	-	-
15	QPSK	1	0	-	-	**23.85**	**0.243**	-	-
		1	36	-	-	23.58	0.228	-	-
		1	74	-	-	23.53	0.225	-	-
		36	0	-	-	22.98	0.199	-	-
		36	18	-	-	22.81	0.191	-	-
		36	37	-	-	22.76	0.189	-	-
		75	0	-	-	22.86	0.193	-	-
	16QAM	1	0	-	-	**23.09**	**0.204**	-	-
		1	36	-	-	22.91	0.195	-	-
		1	74	-	-	22.79	0.190	-	-
		36	0	-	-	22.19	0.166	-	-
		36	18	-	-	22.15	0.164	-	-
		36	37	-	-	22.13	0.163	-	-
		75	0	-	-	22.12	0.163	-	-
	64QAM	1	0	-	-	**21.69**	**0.148**	-	-
		1	36	-	-	21.51	0.142	-	-
		1	74	-	-	21.56	0.143	-	-
		36	0	-	-	20.59	0.115	-	-
		36	18	-	-	20.53	0.113	-	-
		36	37	-	-	20.38	0.109	-	-
		75	0	-	-	20.23	0.105	-	-

4. Occupied Bandwidth

4.1. Limit

CFR 47, Section FCC §2.1049 and IC RSS-Gen Issue 5 6.7.

4.2. Test Procedure

FCC

The test follows section 5.4.4 of ANSI C63.26-2015.

a. The spectrum analyzer center frequency is set to the nominal EUT channel center frequency. The frequency span for the spectrum analyzer shall be set wide enough to capture all modulation. products including the emission skirts (typically a span of 1.5 × OBW is sufficient).
b. The nominal IF filter 3 dB bandwidth (RBW) shall be in the range of 1 % to 5 % of the anticipated OBW, and the VBW shall be set ≥ 3 × RBW.
c. Set the reference level of the instrument as required to prevent the signal amplitude from exceeding the maximum spectrum analyzer input mixer level for linear operation. See guidance provided in 4.2.3.
d. Set the detection mode to peak, and the trace mode to max-hold.
e. If the instrument does not have a 99 % OBW function, recover the trace data points and sum directly in linear power terms. Place the recovered amplitude data points, beginning at the lowest frequency, in a running sum until 0.5 % of the total is reached. Record that frequency as the lower OBW frequency. Repeat the process until 99.5 % of the total is reached and record that frequency as the upper OBW frequency. The 99 % power OBW can be determined by computing the difference these two frequencies.
f. The OBW shall be reported and plot(s) of the measuring instrument display shall be provided with the test report. The frequency and amplitude axis and scale shall be clearly labeled. Tabular data can be reported in addition to the plot(s).

IC

The following conditions shall be observed for measuring the occupied bandwidth and x dB bandwidth:

• The transmitter shall be operated at its maximum carrier power measured under normal test conditions.
• The span of the spectrum analyzer shall be set large enough to capture all products of the modulation process, including the emission skirts, around the carrier frequency, but small enough to avoid having other emissions (e.g. on adjacent channels) within the span.
• The detector of the spectrum analyzer shall be set to “Sample”. However, a peak, or peak hold, may be used in place of the sampling detector since this usually produces a wider bandwidth than the actual bandwidth (worst-case measurement). Use of a peak hold (or “Max Hold”) may be necessary to determine the occupied / x dB bandwidth if the device is not transmitting continuously.
• The resolution bandwidth (RBW) shall be in the range of 1 % to 5 % of the actual occupied / x dB bandwidth and the video bandwidth (VBW) shall not be smaller than three times the RBW value. Video averaging is not permitted.

Note: It may be necessary to repeat the measurement a few times until the RBW and VBW are in compliance with the above requirement.

For the 99 % emission bandwidth, the trace data points are recovered and directly summed in linear power level terms. The recovered amplitude data points, beginning at the lowest frequency, are placed in a running sum until 0.5 % of the total is reached, and that frequency recorded. The process is repeated for the highest frequency data points (starting at the highest frequency, at the right side of the span, and going down in frequency). This frequency is then recorded. The difference between the two recorded frequencies is the occupied bandwidth (or the 99 % emission bandwidth).

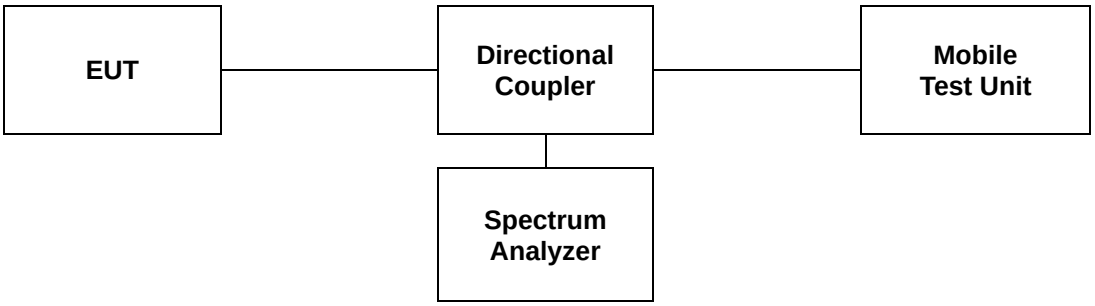

4.3 Test Results

Ambient temperature : (23 ± 1) ℃
Relative humidity : 47 % R.H.

Band	Bandwidth (㎒)	Frequency (㎒)	Occupied Bandwidth (㎒)	
			QPSK	16QAM
26 Part 22	1.4	836.5	1.103	1.094
	3		2.683	2.683
	5		4.486	4.486
	10		8.915	8.915
	15	831.5	13.415	13.459
26 Part 90	1.4	819.0	1.094	1.094
	3		2.674	2.683
	5		4.501	4.486
	10		8.915	8.944
	15	821.5	13.415	13.502

- Test plots

LTE band 26/5_Part 22

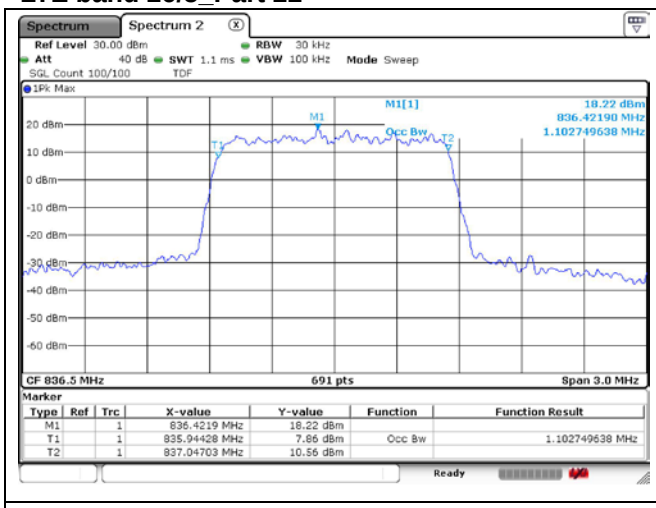

1.4 ㎒ QPSK Middle Channel - Full RB

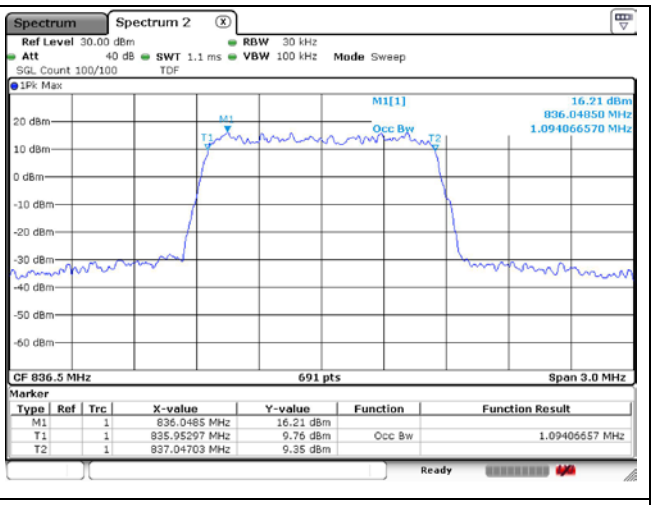

1.4 ㎒ 16QAM Middle Channel - Full RB

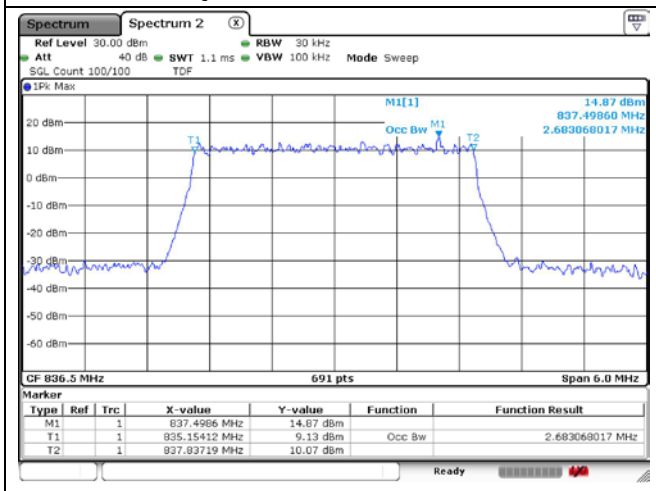

3 ㎒ QPSK Middle Channel - Full RB

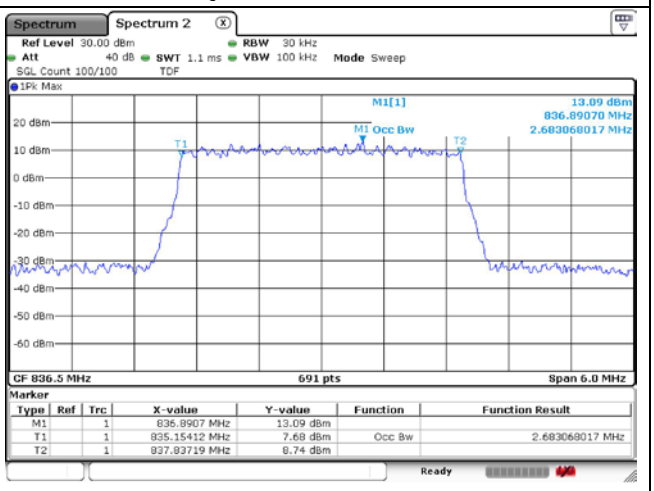

3 ㎒ 16QAM Middle Channel - Full RB

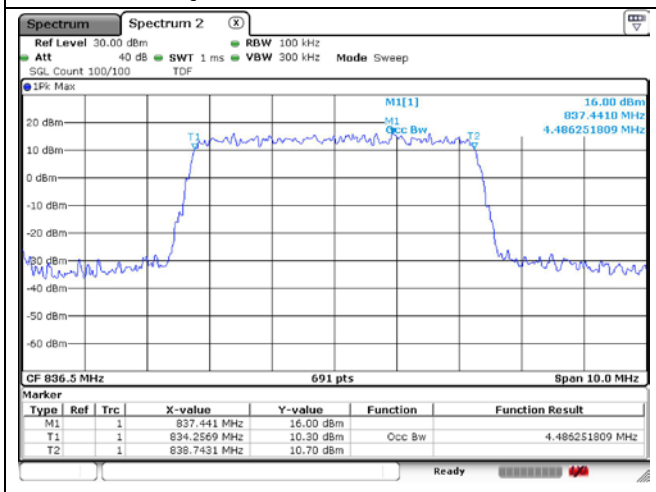

5 ㎒ QPSK Middle Channel - Full RB

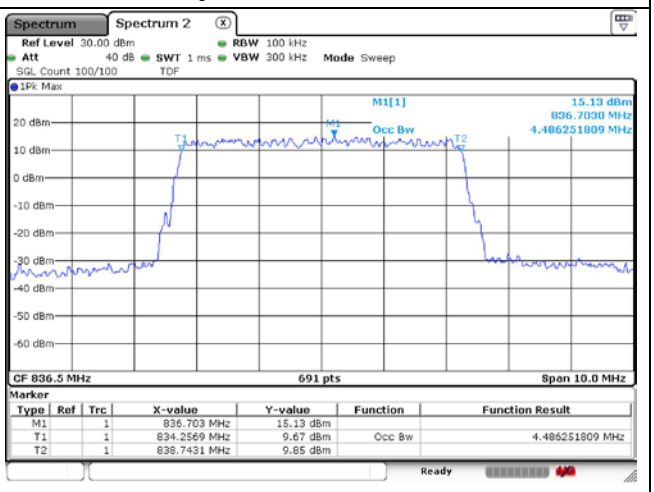

5 ㎒ 16QAM Middle Channel - Full RB

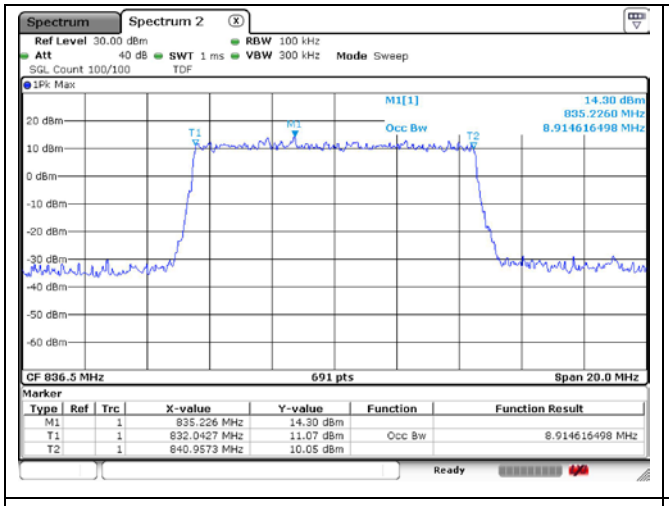

10 ㎒ QPSK Middle Channel - Full RB

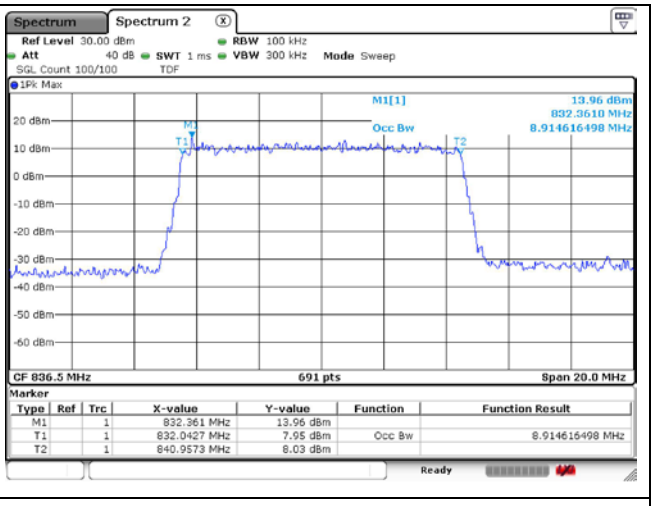

10 ㎒ 16QAM Middle Channel - Full RB

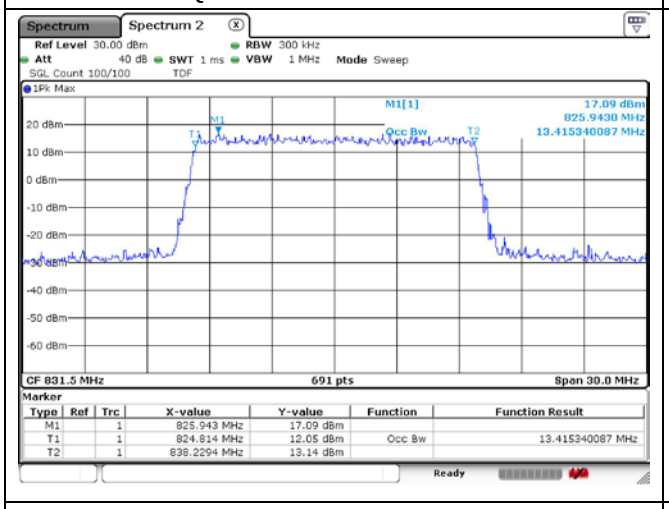

15 ㎒ QPSK Low Channel - Full RB

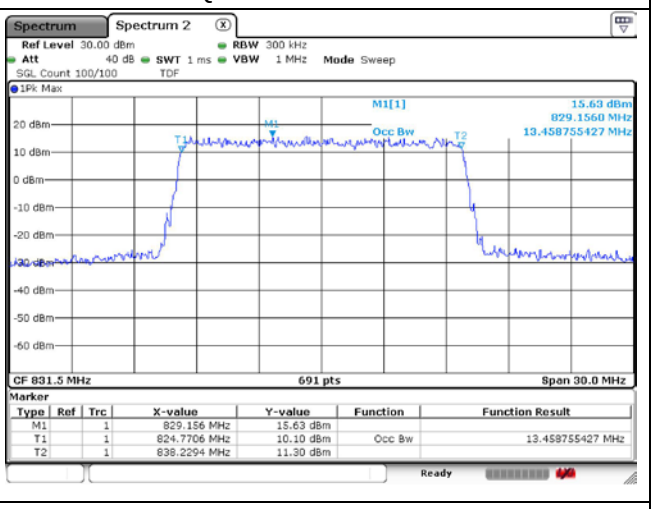

15 ㎒ 16QAM Low Channel - Full RB