5A-n66A (40 ㎒ - DFTS-OFDM BPSK)

Frequency (㎒)	Measured Level (dBμV)	Ant. Pol.	AF (dB/m)	AMP+CL (dB)	E (dBμV/m)	CF (dB)	E.I.R.P. (dB m)	Limit (dB m)	Margin (dB)
Middle Channel (1 745 ㎒)									
5 235.46	43.93	H	33.57	-35.10	42.40	-95.26	-52.86	-13	39.86
5 235.22	44.01	V	33.57	-35.10	42.48	-95.26	-52.78	-13	39.78
6 383.75	48.92	H	34.60	-33.51	50.01	-95.26	**-45.25**	-13	32.25
Above 6 400.00	Not detected	–	–	–	–	–	–	–	–

66A-n71A (10 ㎒ - DFTS-OFDM BPSK)

Frequency (㎒)	Measured Level (dBμV)	Ant. Pol.	AF (dB/m)	AMP+CL (dB)	E (dBμV/m)	CF (dB)	E.R.P. (dB m)	Limit (dB m)	Margin (dB)
Low Channel (668 ㎒)									
3 981.31	51.66	H	32.04	-36.39	47.31	-97.41	**-50.10**	-13	37.10
Above 4 000.00	Not detected	–	–	–	–	–	–	–	–
Middle Channel (680.5 ㎒)									
4 056.39	47.36	H	31.90	-36.43	42.83	-97.41	-54.58	-13	41.58
Above 4 100.00	Not detected	–	–	–	–	–	–	–	–
High Channel (693 ㎒)									
4 131.25	44.20	H	31.96	-36.18	39.98	-97.41	-57.43	-13	44.43
Above 4 200.00	Not detected	–	–	–	–	–	–	–	–

- External Antenna

NR Band 7 (5 ㎒ - DFTS-OFDM QPSK)

Frequency (㎒)	Measured Level (dBμV)	Ant. Pol.	AF (dB/m)	AMP+CL (dB)	E (dBμV/m)	CF (dB)	E.I.R.P. (dB m)	Limit (dB m)	Margin (dB)
Low Channel (2 502.5 ㎒)									
5 008.82	39.85	V	33.00	-28.87	43.98	-95.26	-51.28	-25	26.28
Above 5 100.00	Not detected	–	–	–	–	–	–	–	–
Middle Channel (2 535 ㎒)									
5 073.98	46.06	V	33.10	-29.38	49.78	-95.26	-45.48	-25	20.48
Above 5 100.00	Not detected	–	–	–	–	–	–	–	–
High Channel (2 567.5 ㎒)									
5 138.92	48.99	V	33.28	-28.89	53.38	-95.26	**-41.88**	-25	16.88
Above 5 200.00	Not detected	–	–	–	–	–	–	–	–

NR Band 12 (15 ㎒ - DFTS-OFDM QPSK)

Frequency (㎒)	Measured Level (dBμV)	Ant. Pol.	AF (dB/m)	AMP+CL (dB)	E (dBμV/m)	CF (dB)	E.R.P. (dBm)	Limit (dBm)	Margin (dB)
Low Channel (706.5 ㎒)									
1 399.28	65.69	H	25.10	-37.16	53.63	-97.41	-43.78	-13	30.78
2 098.91	54.14	H	27.50	-35.30	46.34	-97.41	-51.07	-13	38.07
2 099.08	58.69	V	27.50	-35.30	50.89	-97.41	-46.52	-13	33.52
2 992.50	45.69	V	29.61	-33.59	41.71	-97.41	-55.70	-13	42.70
3 984.80	44.08	V	32.03	-31.24	44.87	-97.41	-52.54	-13	39.54
Above 4 000.00	Not detected	–	–	–	–	–	–	–	–
Middle Channel (707.5 ㎒)									
1 401.29	65.80	H	25.10	-37.15	53.75	-97.41	-43.66	-13	30.66
2 102.07	54.05	H	27.50	-35.31	46.24	-97.41	-51.17	-13	38.17
2 101.97	57.95	V	27.50	-35.31	50.14	-97.41	-47.27	-13	34.27
2 992.40	44.15	V	29.61	-33.59	40.17	-97.41	-57.24	-13	44.24
3 984.54	43.89	V	32.03	-31.24	44.68	-97.41	-52.73	-13	39.73
Above 4 000.00	Not detected	–	–	–	–	–	–	–	–
High Channel (708.5 ㎒)									
1 403.32	65.92	H	25.09	-37.15	53.86	-97.41	**-43.55**	-13	30.55
2 104.80	52.06	H	27.51	-35.31	44.26	-97.41	-53.15	-13	40.15
2 104.91	57.50	V	27.51	-35.31	49.70	-97.41	-47.71	-13	34.71
2 993.02	46.18	V	29.62	-33.59	42.21	-97.41	-55.20	-13	42.20
3 984.55	44.01	V	32.03	-31.24	44.80	-97.41	-52.61	-13	39.61
Above 4 000.00	Not detected	–	–	–	–	–	–	–	–

NR Band 13 (10 ㎒ - DFTS-OFDM QPSK)

Frequency (㎒)	Measured Level (dBμV)	Ant. Pol.	AF (dB/m)	AMP+CL (dB)	E (dBμV/m)	CF (dB)	E.R.P. / E.I.R.P. (dB m)	Limit (dB m)	Margin (dB)
Middle Channel (782 ㎒)									
1 564.22	63.29	H	25.36	-36.68	51.97	-95.26	**-43.29**	-40	3.29
2 346.37	57.61	H	27.80	-34.57	50.84	-97.41	-46.57	-13	33.57
2 346.27	58.24	V	27.80	-34.57	51.47	-97.41	-45.94	-13	32.94
3 910.16	46.06	V	32.18	-31.63	46.61	-97.41	-50.80	-13	37.80
Above 4 000.00	Not detected	–	–	–	–	–	–	–	–

NR Band 14 (10 ㎒ - DFTS-OFDM QPSK)

Frequency (㎒)	Measured Level (dBμV)	Ant. Pol.	AF (dB/m)	AMP+CL (dB)	E (dBμV/m)	CF (dB)	E.R.P. / E.I.R.P. (dB m)	Limit (dB m)	Margin (dB)
Middle Channel (793 ㎒)									
1 586.13	53.51	H	25.44	-36.56	42.39	-95.26	**-52.87**	-40	12.87
1 586.07	47.27	H	25.44	-36.56	36.15	-95.26	-59.11	-40	19.11
2 379.20	54.01	V	27.98	-34.56	47.43	-97.41	-49.98	-13	36.98
2 379.07	64.33	V	27.97	-34.56	57.74	-97.41	-39.67	-13	26.67
3 965.68	42.70	V	32.07	-31.27	43.50	-97.41	-53.91	-13	40.91
Above 4 000.00	Not detected	–	–	–	–	–	–	–	–

NR Band 25/2 (10 ㎒ - DFTS-OFDM QPSK)

Frequency (㎒)	Measured Level (dBμV)	Ant. Pol.	AF (dB/m)	AMP+CL (dB)	E (dBμV/m)	CF (dB)	E.I.R.P. (dBm)	Limit (dBm)	Margin (dB)
Low Channel (1 855 ㎒)									
3 718.83	45.29	V	32.14	-31.79	45.64	-95.26	-49.62	-13	36.62
3 982.65	42.52	V	32.03	-31.23	43.32	-95.26	-51.94	-13	38.94
5 578.23	46.07	V	33.90	-28.26	51.71	-95.26	**-43.55**	-13	30.55
Above 5 600.00	Not detected	–	–	–	–	–	–	–	–
Middle Channel (1 882.5 ㎒)									
3 773.85	47.36	V	32.10	-32.23	47.23	-95.26	-48.03	-13	35.03
3 982.49	41.68	V	32.04	-31.23	42.49	-95.26	-52.77	-13	39.77
5 660.65	40.74	V	33.90	-27.54	47.10	-95.26	-48.16	-13	35.16
Above 5 700.00	Not detected	–	–	–	–	–	–	–	–
High Channel (1 910 ㎒)									
3 828.95	44.87	V	32.06	-31.38	45.55	-95.26	-49.71	-13	36.71
3 981.98	42.10	V	32.04	-31.22	42.92	-95.26	-52.34	-13	39.34
5 743.48	39.85	V	33.99	-27.27	46.57	-95.26	-48.69	-13	35.69
Above 5 800.00	Not detected	–	–	–	–	–	–	–	–

NR Band 26/5_Part 22 (10 ㎒ - DFTS-OFDM QPSK)

Frequency (㎒)	Measured Level (dBμV)	Ant. Pol.	AF (dB/m)	AMP+CL (dB)	E (dBμV/m)	CF (dB)	E.R.P. (dB m)	Limit (dB m)	Margin (dB)
Low Channel (829 ㎒)									
1 649.05	46.84	H	25.60	-36.53	35.91	-97.41	-61.50	-13	48.50
2 473.88	61.05	H	28.15	-34.19	55.01	-97.41	**-42.40**	-13	29.40
2 473.58	58.99	V	28.15	-34.19	52.95	-97.41	-44.46	-13	31.46
4 122.89	40.15	V	31.95	-31.45	40.65	-97.41	-56.76	-13	43.76
Above 4 200.00	Not detected	–	–	–	–	–	–	–	–
Middle Channel (836.5 ㎒)									
1 664.12	45.38	H	25.77	-36.49	34.66	-97.41	-62.75	-13	49.75
2 496.21	60.10	H	28.11	-34.03	54.18	-97.41	-43.23	-13	30.23
2 496.44	57.44	V	28.11	-34.03	51.52	-97.41	-45.89	-13	32.89
4 160.38	38.49	V	31.98	-30.59	39.88	-97.41	-57.53	-13	44.53
Above 4 200.00	Not detected	–	–	–	–	–	–	–	–
High Channel (844 ㎒)									
1 679.05	45.08	H	25.95	-36.44	34.59	-97.41	-62.82	-13	49.82
2 518.71	60.52	H	28.21	-34.10	54.63	-97.41	-42.78	-13	29.78
2 518.83	56.95	V	28.21	-34.10	51.06	-97.41	-46.35	-13	33.35
4 197.77	37.58	V	31.90	-29.75	39.73	-97.41	-57.68	-13	44.68
Above 4 200.00	Not detected	–	–	–	–	–	–	–	–

NR Band 26_Part 90 (10 ㎒ - DFTS-OFDM QPSK)

Frequency (㎒)	Measured Level (dBμV)	Ant. Pol.	AF (dB/m)	AMP+CL (dB)	E (dBμV/m)	CF (dB)	E.R.P. (dB m)	Limit (dB m)	Margin (dB)
Middle Channel (819 ㎒)									
1 629.10	47.85	H	25.56	-36.42	36.99	-97.41	-60.42	-13	47.42
2 443.82	61.07	H	28.19	-34.42	54.84	-97.41	-42.57	-13	29.57
2 443.72	62.99	V	28.19	-34.42	56.76	-97.41	**-40.65**	-13	27.65
4 072.99	45.27	V	31.90	-31.19	45.98	-97.41	-51.43	-13	38.43
Above 4 100.00	Not detected	–	–	–	–	–	–	–	–

NR band 66 (5 ㎒ - DFTS-OFDM QPSK)

Frequency (㎒)	Measured Level (dBμV)	Ant. Pol.	AF (dB/m)	AMP+CL (dB)	E (dBμV/m)	CF (dB)	E.I.R.P. (dB m)	Limit (dB m)	Margin (dB)
Low Channel (1 712.5 ㎒)									
3 420.94	59.12	H	30.87	-32.52	57.47	-95.26	-37.79	-13	24.79
3 420.99	68.53	V	30.87	-32.52	66.88	-95.26	-28.38	-13	15.38
5 131.46	53.84	H	33.26	-29.02	58.08	-95.26	-37.18	-13	24.18
5 131.51	63.38	V	33.26	-29.02	67.62	-95.26	-27.64	-13	14.64
6 842.01	63.67	H	35.28	-25.41	73.54	-95.26	-21.72	-13	8.72
6 842.16	70.41	V	35.28	-25.41	80.28	-95.26	**-14.98**	-13	1.98
8 552.62	67.36	H	36.51	-24.01	79.86	-95.26	-15.40	-13	2.40
8 552.66	65.53	V	36.51	-24.01	78.03	-95.26	-17.23	-13	4.23
10 263.35	49.46	H	37.80	-21.89	65.37	-95.26	-29.89	-13	16.89
10 263.25	57.17	V	37.80	-21.89	73.08	-95.26	-22.18	-13	9.18
11 973.38	52.92	H	38.50	-19.84	71.58	-95.26	-23.68	-13	10.68
11 973.49	55.68	V	38.50	-19.84	74.34	-95.26	-20.92	-13	7.92
13 684.01	46.61	H	40.40	-16.93	70.08	-95.26	-25.18	-13	12.18
Above 13 700.00	Not detected	–	–	–	–	–	–	–	–
Middle Channel (1 745 ㎒)									
3 486.02	46.54	H	31.10	-32.50	45.14	-95.26	-50.12	-13	37.12
3 485.95	61.86	V	31.10	-32.49	60.47	-95.26	-34.79	-13	21.79
5 229.11	43.72	H	33.56	-28.77	48.51	-95.26	-46.75	-13	33.75
5 229.00	53.67	V	33.56	-28.77	58.46	-95.26	-36.80	-13	23.80
6 971.92	52.33	H	35.44	-25.61	62.16	-95.26	-33.10	-13	20.10
6 971.87	56.16	V	35.44	-25.61	65.99	-95.26	-29.27	-13	16.27
8 714.91	44.82	H	36.93	-23.75	58.00	-95.26	-37.26	-13	24.26
8 715.00	48.80	V	36.93	-23.75	61.98	-95.26	-33.28	-13	20.28
10 458.02	47.31	H	37.78	-22.48	62.61	-95.26	-32.65	-13	19.65
10 457.87	51.82	V	37.78	-22.48	67.12	-95.26	-28.14	-13	15.14
12 200.87	31.79	H	38.40	-18.74	51.45	-95.26	-43.81	-13	30.81
12 200.66	32.88	V	38.40	-18.74	52.54	-95.26	-42.72	-13	29.72
Above 12 300.00	Not detected	–	–	–	–	–	–	–	–

Frequency (㎒)	Measured Level (dBμV)	Ant. Pol.	AF (dB/m)	AMP+CL (dB)	E (dBμV/m)	CF (dB)	E.I.R.P. (dB m)	Limit (dB m)	Margin (dB)
High Channel (1 777.5 ㎒)									
3 550.77	40.68	H	31.00	-33.03	38.65	-95.26	-56.61	-13	43.61
3 550.02	54.37	V	31.00	-33.06	52.31	-95.26	-42.95	-13	29.95
5 326.50	41.71	H	33.85	-28.68	46.88	-95.26	-48.38	-13	35.38
5 326.57	50.38	V	33.85	-28.68	55.55	-95.26	-39.71	-13	26.71
7 101.75	40.00	H	35.60	-25.88	49.72	-95.26	-45.54	-13	32.54
7 062.06	43.44	V	35.52	-26.10	52.86	-95.26	-42.40	-13	29.40
8 877.89	34.38	H	37.14	-23.56	47.96	-95.26	-47.30	-13	34.30
8 827.35	36.69	V	37.15	-23.73	50.11	-95.26	-45.15	-13	32.15
Above 8 900.00	Not detected	–	–	–	–	–	–	–	–

NR band 71 (15 ㎒ - DFTS-OFDM QPSK)

Frequency (㎒)	Measured Level (dBμV)	Ant. Pol.	AF (dB/m)	AMP+CL (dB)	E (dBμV/m)	CF (dB)	E.R.P. (dB m)	Limit (dB m)	Margin (dB)
Low Channel (670.5 ㎒)									
2 012.12	49.01	H	27.68	-35.50	41.19	-97.41	-56.22	-13	43.22
2 012.05	67.09	V	27.68	-35.50	59.27	-97.41	-38.14	-13	25.14
4 024.06	43.15	V	31.95	-31.28	43.82	-97.41	-53.59	-13	40.59
Above 4 100.00	Not detected	–	–	–	–	–	–	–	–
Middle Channel (680.5 ㎒)									
2 041.99	52.77	H	27.62	-35.37	45.02	-97.41	-52.39	-13	39.39
2 041.84	67.38	V	27.62	-35.38	59.62	-97.41	-37.79	-13	24.79
4 083.96	44.20	V	31.90	-30.78	45.32	-97.41	-52.09	-13	39.09
Above 4 100.00	Not detected	–	–	–	–	–	–	–	–
High Channel (690.5 ㎒)									
1 381.31	46.73	H	25.10	-37.28	34.55	-97.41	-62.86	-13	49.86
2 072.07	60.98	H	27.56	-35.05	53.49	-97.41	-43.92	-13	30.92
2 071.96	67.53	V	27.56	-35.05	60.04	-97.41	**-37.37**	-13	24.37
4 101.57	37.59	V	31.90	-30.10	39.39	-97.41	-58.02	-13	45.02
Above 4 200.00	Not detected	–	–	–	–	–	–	–	–

ENDC

5A-n2A (15 ㎒ - DFTS-OFDM BPSK)

Frequency (㎒)	Measured Level (dBμV)	Ant. Pol.	AF (dB/m)	AMP+CL (dB)	E (dBμV/m)	CF (dB)	E.I.R.P. (dB m)	Limit (dB m)	Margin (dB)
Low Channel (1 857.5 ㎒)									
3 715.25	51.16	V	32.13	-36.62	46.67	-95.26	-48.59	-13	35.59
5 573.02	55.61	V	33.90	-34.04	55.47	-95.26	**-39.79**	-13	26.79
Above 5 600.00	Not detected	–	–	–	–	–	–	–	–
Middle Channel (1 880.0 ㎒)									
3 760.16	52.61	V	32.16	-36.89	47.88	-95.26	-47.38	-13	34.38
5 640.33	49.76	V	33.90	-33.45	50.21	-95.26	-45.05	-13	32.05
Above 5 700.00	Not detected	–	–	–	–	–	–	–	–
High Channel (1 902.5 ㎒)									
3 805.36	51.65	V	32.01	-36.59	47.07	-95.26	-48.19	-13	35.19
5 707.99	48.28	V	33.92	-33.56	48.64	-95.26	-46.62	-13	33.62
Above 5 800.00	Not detected	–	–	–	–	–	–	–	–

7A-n5A (15 ㎒ - DFTS-OFDM BPSK)

Frequency (㎒)	Measured Level (dBμV)	Ant. Pol.	AF (dB/m)	AMP+CL (dB)	E (dBμV/m)	CF (dB)	E.R.P. (dB m)	Limit (dB m)	Margin (dB)
Low Channel (831.5 ㎒)									
2 479.94	53.00	H	28.14	-36.92	44.22	-97.41	-53.19	-13	40.19
2 480.05	51.33	V	28.14	-36.92	42.55	-97.41	-54.86	-13	41.86
Above 2 500.00	Not detected	–	–	–	–	–	–	–	–
Middle Channel (836.5 ㎒)									
2 509.98	58.95	H	28.16	-37.07	50.04	-97.41	**-47.37**	-13	34.37
2 510.00	58.41	V	28.16	-37.06	49.51	-97.41	-47.90	-13	34.90
Above 2 600.00	Not detected	–	–	–	–	–	–	–	–
High Channel (841.5 ㎒)									
2 539.92	57.37	H	28.34	-36.65	49.06	-97.41	-48.35	-13	35.35
2 539.88	53.66	V	28.34	-36.65	45.35	-97.41	-52.06	-13	39.06
Above 2 600.00	Not detected	–	–	–	–	–	–	–	–

5A-n7A (20 ㎒ - DFTS-OFDM BPSK)

Frequency (㎒)	Measured Level (dBμV)	Ant. Pol.	AF (dB/m)	AMP+CL (dB)	E (dBμV/m)	CF (dB)	E.I.R.P. (dB m)	Limit (dB m)	Margin (dB)
Low Channel (2 510 ㎒)									
5 038.37	52.59	V	33.00	-35.22	50.37	-95.26	-44.89	-25	19.89
Above 5 100.00	Not detected	–	–	–	–	–	–	–	–
Middle Channel (2 535 ㎒)									
5 088.27	54.99	V	33.15	-35.38	52.76	-95.26	-42.50	-25	17.50
Above 5 100.00	Not detected	–	–	–	–	–	–	–	–
High Channel (2 560 ㎒)									
5 138.53	56.38	V	33.28	-35.47	54.19	-95.26	**-41.07**	-25	16.07
Above 5 200.00	Not detected	–	–	–	–	–	–	–	–

66A-n12A (15 ㎒ - DFTS-OFDM QPSK)

Frequency (㎒)	Measured Level (dBμV)	Ant. Pol.	AF (dB/m)	AMP+CL (dB)	E (dBμV/m)	CF (dB)	E.R.P. (dB m)	Limit (dB m)	Margin (dB)
Low Channel (706.5 ㎒)									
1 399.32	53.87	V	25.10	-39.15	39.82	-97.41	-57.59	-13	44.59
2 099.00	77.89	H	27.50	-37.35	68.04	-97.41	-29.37	-13	16.37
2 099.00	77.37	V	27.50	-37.35	67.52	-97.41	-29.89	-13	16.89
3 498.58	63.59	H	31.10	-36.67	58.02	-97.41	-39.39	-13	26.39
3 498.38	62.96	V	31.10	-36.67	57.39	-97.41	-40.02	-13	27.02
Above 3 500.00	Not detected	–	–	–	–	–	–	–	–
Middle Channel (707.5 ㎒)									
1 401.42	53.40	V	25.10	-39.15	39.35	-97.41	-58.06	-13	45.06
2 102.04	77.84	H	27.50	-37.31	68.03	-97.41	-29.38	-13	16.38
2 101.78	77.04	V	27.50	-37.32	67.22	-97.41	-30.19	-13	17.19
3 503.14	61.10	H	31.09	-36.68	55.51	-97.41	-41.90	-13	28.90
3 503.46	60.66	V	31.09	-36.68	55.07	-97.41	-42.34	-13	29.34
Above 3 600.00	Not detected	–	–	–	–	–	–	–	–
High Channel (708.5 ㎒)									
1 403.30	55.54	V	25.09	-39.15	41.48	-97.41	-55.93	-13	42.93
2 105.00	78.19	H	27.51	-37.28	68.42	-97.41	**-28.99**	-13	15.99
2 105.02	75.71	V	27.51	-37.28	65.94	-97.41	-31.47	-13	18.47
3 508.07	60.46	H	31.08	-36.71	54.83	-97.41	-42.58	-13	29.58
3 508.16	63.34	V	31.08	-36.71	57.71	-97.41	-39.70	-13	26.70
Above 3 600.00	Not detected	–	–	–	–	–	–	–	–

66A-n13A (5 ㎒ - DFTS-OFDM BPSK)

Frequency (㎒)	Measured Level (dBμV)	Ant. Pol.	AF (dB/m)	AMP+CL (dB)	E (dBμV/m)	CF (dB)	E.R.P. (dB m)	Limit (dB m)	Margin (dB)
Low Channel (779.5 ㎒)									
2 339.23	71.25	H	27.80	-36.39	62.66	-97.41	-34.75	-13	21.75
2 338.91	78.71	V	27.80	-36.39	70.12	-97.41	-27.29	-13	14.29
3 899.00	59.61	V	32.20	-36.02	55.79	-97.41	-41.62	-13	28.62
Above 3 900.00	Not detected	–	–	–	–	–	–	–	–
Middle Channel (782 ㎒)									
2 346.45	74.90	H	27.80	-36.33	66.37	-97.41	-31.04	-13	18.04
2 346.53	80.18	V	27.80	-36.33	71.65	-97.41	**-25.76**	-13	12.76
3 910.78	60.73	V	32.18	-35.97	56.94	-97.41	-40.47	-13	27.47
Above 4 000.00	Not detected	–	–	–	–	–	–	–	–
High Channel (784.5 ㎒)									
2 354.03	62.43	H	27.82	-36.28	53.97	-97.41	-43.44	-13	30.44
2 354.02	74.22	V	27.82	-36.28	65.76	-97.41	-31.65	-13	18.65
3 923.18	44.96	V	32.15	-35.92	41.19	-97.41	-56.22	-13	43.22
Above 4 000.00	Not detected	–	–	–	–	–	–	–	–

12A-n25A (15 ㎒ - DFTS-OFDM BPSK)

Frequency (㎒)	Measured Level (dBμV)	Ant. Pol.	AF (dB/m)	AMP+CL (dB)	E (dBμV/m)	CF (dB)	E.I.R.P. (dB m)	Limit (dB m)	Margin (dB)
Low Channel (1 857.5 ㎒)									
3 701.20	58.01	V	32.10	-36.60	53.51	-95.26	**-41.75**	-13	28.75
3 999.50	48.44	V	32.00	-36.43	44.01	-95.26	-51.25	-13	38.25
5 551.78	47.64	V	33.90	-34.20	47.34	-95.26	-47.92	-13	34.92
Above 5 600.00	Not detected	–	–	–	–	–	–	–	–
Middle Channel (1 882.5 ㎒)									
3 751.20	53.01	V	32.20	-36.85	48.36	-95.26	-46.90	-13	33.90
3 999.44	47.46	V	32.00	-36.43	43.03	-95.26	-52.23	-13	39.23
5 626.96	50.92	V	33.90	-33.52	51.30	-95.26	-43.96	-13	30.96
Above 5 700.00	Not detected	–	–	–	–	–	–	–	–
High Channel (1 907.5 ㎒)									
3 801.19	51.91	V	32.00	-36.63	47.28	-95.26	-47.98	-13	34.98
3 999.68	49.88	V	32.00	-36.43	45.45	-95.26	-49.81	-13	36.81
5 701.79	44.76	V	33.90	-33.56	45.10	-95.26	-50.16	-13	37.16
Above 5 800.00	Not detected	–	–	–	–	–	–	–	–

5A-n66A (40 ㎒ - DFTS-OFDM BPSK)

Frequency (㎒)	Measured Level (dBμV)	Ant. Pol.	AF (dB/m)	AMP+CL (dB)	E (dBμV/m)	CF (dB)	E.I.R.P. (dB m)	Limit (dB m)	Margin (dB)
Middle Channel (1 745 ㎒)									
3 490.01	62.83	H	31.10	-36.72	57.21	-95.26	-38.05	-13	25.05
3 490.17	70.23	V	31.10	-36.72	64.61	-95.26	-30.65	-13	17.65
3 999.50	48.44	V	32.00	-36.43	44.01	-95.26	-51.25	-13	38.25
5 235.13	55.27	H	33.57	-35.10	53.74	-95.26	-41.52	-13	28.52
5 235.16	62.98	V	33.57	-35.10	61.45	-95.26	-33.81	-13	20.81
6 980.28	64.96	H	35.46	-33.06	67.36	-95.26	-27.90	-13	14.90
6 980.20	70.48	V	35.46	-33.06	72.88	-95.26	**-22.38**	-13	9.38
8 725.38	56.79	H	36.95	-33.90	59.84	-95.26	-35.42	-13	22.42
8 725.34	63.82	V	36.95	-33.90	66.87	-95.26	-28.39	-13	15.39
10 470.39	51.42	H	37.76	-31.40	57.78	-95.26	-37.48	-13	24.48
10 470.39	60.25	V	37.76	-31.40	66.61	-95.26	-28.65	-13	15.65
12 215.52	46.61	H	38.40	-29.57	55.44	-95.26	-39.82	-13	26.82
12 215.53	51.03	V	38.40	-29.57	59.86	-95.26	-35.40	-13	22.40
13 960.60	38.60	H	40.72	-27.53	51.79	-95.26	-43.47	-13	30.47
13 961.16	39.28	V	40.72	-27.53	52.47	-95.26	-42.79	-13	29.79
Above 14 000.00	Not detected	–	–	–	–	–	–	–	–

66A-n71A (10 ㎒ - DFTS-OFDM BPSK)

Frequency (㎒)	Measured Level (dBμV)	Ant. Pol.	AF (dB/m)	AMP+CL (dB)	E (dBμV/m)	CF (dB)	E.R.P. (dB m)	Limit (dB m)	Margin (dB)
Low Channel (668 ㎒)									
1 990.86	71.95	H	27.66	-37.69	61.92	-97.41	-35.49	-13	22.49
1 990.66	74.97	V	27.66	-37.69	64.94	-97.41	-32.47	-13	19.47
3 981.30	48.48	V	32.04	-36.39	44.13	-97.41	-53.28	-13	40.28
Above 4 000.00	Not detected	–	–	–	–	–	–	–	–
Middle Channel (680.5 ㎒)									
2 028.16	73.25	H	27.64	-37.59	63.30	-97.41	-34.11	-13	21.11
2 028.21	75.42	V	27.64	-37.59	65.47	-97.41	**-31.94**	-13	18.94
4 056.26	48.91	V	31.90	-36.43	44.38	-97.41	-53.03	-13	40.03
Above 4 100.00	Not detected	–	–	–	–	–	–	–	–
High Channel (693 ㎒)									
2 065.66	69.54	H	27.57	-37.53	59.58	-97.41	-37.83	-13	24.83
2 065.65	73.13	V	27.57	-37.53	63.17	-97.41	-34.24	-13	21.24
4 131.36	46.94	V	31.96	-36.18	42.72	-97.41	-54.69	-13	41.69
Above 4 200.00	Not detected	–	–	–	–	–	–	–	–

Remark;

1. AF = Antenna Factor, CL = Cable Loss, CF = Conversion Factor.
2. E (dBμV/m) = Measured Level (dBμV) + Antenna Factor (dB/m) + AMP (dB) + Cable Loss (dB).
3. E.I.R.P. (dB m) = E (dBμV/m) + CF (dB).
4. E.R.P. (dB m) = E (dBμV/m) + CF (dB) - 2.15 (dB); where E.R.P. and E.I.R.P. are expressed in consistent units.
5. CF (dB) = 20 log D - 104.8; where D is the measurement distance in meters, According to KDB 971168 D01 v03r01 5.8.4.
6. The frequency spectrum is examined from 9 ㎑ to the 10th harmonic of the fundamental frequency of the transmitter. No other spurious and harmonic emissions were reported greater than listed emissions above table.

3. Conducted Output Power

3.1. Limit

CFR 47, Section FCC §2.1046 and IC RSS-Gen Issue 5 6.12.

3.2. Test Procedure

Output power shall be measured at the RF output terminals for all configurations.

1. The RF output of the transmitter was connected to the input of the mobile test unit in order to establish communication with the EUT.
2. The EUT was set up for the max. output power with pseudo random data modulation by using mobile test unit parameters.
3. The measurement performed using a wideband RF power meter.
4. This EUT was tested under all configurations and the highest power was investigated and reported.

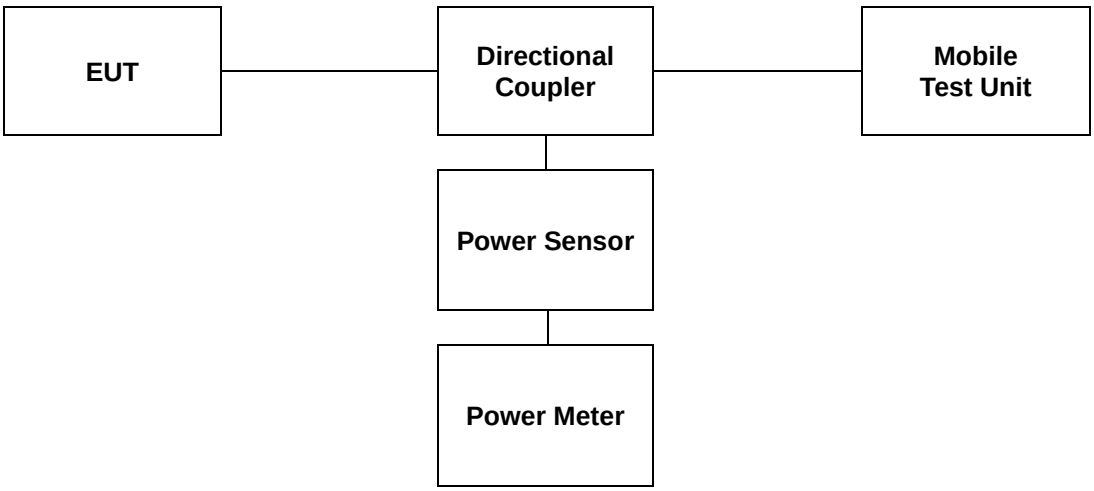

3.3. Test Result

Ambient temperature : (23 ± 1) ℃

Relative humidity : 47 % R.H.

NR Band 7										
BW (㎒)	SCS (㎑)	Modulation	RB Size	RB Offset	Conducted Output Power					
					500500 (2 502.5 ㎒)		507000 (2 535 ㎒)		513500 (2 567.5 ㎒)	
					(dB m)	(W)	(dB m)	(W)	(dB m)	(W)
5	15	DFT-S-OFDM BPSK	1	1	**23.93**	**0.247**	23.60	0.229	23.70	0.234
			1	13	23.89	0.245	23.56	0.227	23.73	0.236
			1	23	23.93	0.247	23.69	0.234	23.70	0.234
			12	0	23.29	0.213	23.05	0.202	23.22	0.210
			12	7	23.87	0.244	23.60	0.229	23.71	0.235
			12	13	23.44	0.221	23.07	0.203	23.23	0.210
			25	0	23.45	0.221	23.12	0.205	23.23	0.210
		DFT-S-OFDM QPSK	1	1	23.84	0.242	23.60	0.229	23.63	0.231
			1	13	23.90	0.245	23.62	0.230	23.61	0.230
			1	23	**24.05**	**0.254**	23.55	0.226	23.66	0.232
			12	0	22.91	0.195	22.62	0.183	22.61	0.182
			12	7	24.03	0.253	23.61	0.230	23.60	0.229
			12	13	22.93	0.196	22.62	0.183	22.60	0.182
			25	0	22.88	0.194	22.60	0.182	22.63	0.183
		DFT-S-OFDM 16QAM	1	1	**22.88**	**0.194**	22.55	0.180	22.55	0.180
		DFT-S-OFDM 64QAM	1	1	21.56	0.143	21.29	0.135	21.35	0.136
		CP-OFDM QPSK	1	1	**22.49**	**0.177**	22.07	0.161	22.27	0.169
		CP-OFDM 16QAM	1	1	**21.88**	**0.154**	21.70	0.148	21.66	0.147
		CP-OFDM 64QAM	1	1	20.40	0.110	20.17	0.104	20.23	0.105

NR Band 7										
BW (㎒)	SCS (㎑)	Modulation	RB Size	RB Offset	Conducted Output Power					
					501000 (2 505 ㎒)		507000 (2 535 ㎒)		513000 (2 565 ㎒)	
					(dB m)	(W)	(dB m)	(W)	(dB m)	(W)
10	15	DFT-S-OFDM BPSK	1	1	**23.83**	**0.242**	23.74	0.237	23.66	0.232
			1	26	23.75	0.237	23.68	0.233	23.63	0.231
			1	50	23.76	0.238	23.68	0.233	23.64	0.231
			25	0	23.28	0.213	23.23	0.210	23.12	0.205
			25	14	23.76	0.238	23.75	0.237	23.65	0.232
			25	27	23.29	0.213	23.23	0.210	23.11	0.205
			50	0	23.32	0.215	23.22	0.210	23.13	0.206
		DFT-S-OFDM QPSK	1	1	23.76	0.238	23.61	0.230	23.67	0.233
			1	26	23.72	0.236	23.79	0.239	23.64	0.231
			1	50	23.79	0.239	**23.85**	**0.243**	23.65	0.232
			25	0	22.65	0.184	22.78	0.190	22.64	0.184
			25	14	23.84	0.242	23.76	0.238	23.64	0.231
			25	27	22.89	0.195	22.77	0.189	22.63	0.183
			50	0	22.71	0.187	22.62	0.183	22.64	0.184
		DFT-S-OFDM 16QAM	1	1	**22.69**	**0.186**	22.66	0.185	22.58	0.181
		DFT-S-OFDM 64QAM	1	1	21.44	0.139	21.37	0.137	21.39	0.138
		CP-OFDM QPSK	1	1	22.27	0.169	**22.33**	**0.171**	22.11	0.163
		CP-OFDM 16QAM	1	1	**21.77**	**0.150**	21.66	0.147	21.69	0.148
		CP-OFDM 64QAM	1	1	20.18	0.104	20.27	0.106	20.26	0.106

NR Band 7										
BW (㎒)	SCS (㎑)	Modulation	RB Size	RB Offset	Conducted Output Power					
					501500 (2 507.5 ㎒)		507000 (2 535 ㎒)		512500 (2 562.5 ㎒)	
					(dB m)	(W)	(dB m)	(W)	(dB m)	(W)
15	15	DFT-S-OFDM BPSK	1	1	**23.94**	**0.248**	23.79	0.239	23.93	0.247
			1	40	23.88	0.244	23.76	0.238	23.89	0.245
			1	77	23.86	0.243	23.78	0.239	23.75	0.237
			36	0	23.39	0.218	23.25	0.211	23.39	0.218
			36	22	23.93	0.247	23.74	0.237	23.90	0.245
			36	43	23.40	0.219	23.24	0.211	23.39	0.218
			75	0	23.40	0.219	23.20	0.209	23.33	0.215
		DFT-S-OFDM QPSK	1	1	23.93	0.247	23.78	0.239	**23.95**	**0.248**
			1	40	23.91	0.246	23.77	0.238	23.91	0.246
			1	77	23.93	0.247	23.82	0.241	23.78	0.239
			36	0	22.91	0.195	22.76	0.189	22.91	0.195
			36	22	23.91	0.246	23.76	0.238	23.91	0.246
			36	43	22.91	0.195	22.76	0.189	22.91	0.195
			75	0	22.92	0.196	22.70	0.186	22.84	0.192
		DFT-S-OFDM 16QAM	1	1	**22.89**	**0.195**	22.71	0.187	22.86	0.193
		DFT-S-OFDM 64QAM	1	1	21.65	0.146	21.45	0.140	21.63	0.146
		CP-OFDM QPSK	1	1	**22.50**	**0.178**	22.23	0.167	22.36	0.172
		CP-OFDM 16QAM	1	1	21.86	0.153	21.79	0.151	**21.88**	**0.154**
		CP-OFDM 64QAM	1	1	20.42	0.110	20.34	0.108	20.44	0.111

NR Band 7										
BW (MHz)	SCS (kHz)	Modulation	RB Size	RB Offset	Conducted Output Power					
					502000 (2 510 MHz)		507000 (2 535 MHz)		512000 (2 560 MHz)	
					(dBm)	(W)	(dBm)	(W)	(dBm)	(W)
20	15	DFT-S-OFDM BPSK	1	1	**23.95**	**0.248**	23.93	0.247	23.85	0.243
			1	53	23.92	0.247	23.91	0.246	23.88	0.244
			1	104	23.91	0.246	23.93	0.247	23.92	0.247
			50	0	23.41	0.219	23.44	0.221	23.38	0.218
			50	28	23.93	0.247	23.94	0.248	23.86	0.243
			50	56	23.43	0.220	23.43	0.220	23.37	0.217
			100	0	23.44	0.221	23.42	0.220	23.43	0.220
		DFT-S-OFDM QPSK	1	1	24.00	0.251	23.98	0.250	23.89	0.245
			1	53	**24.01**	**0.252**	23.92	0.247	23.87	0.244
			1	104	23.92	0.247	23.85	0.243	23.94	0.248
			50	0	23.01	0.200	22.91	0.195	22.87	0.194
			50	28	24.00	0.251	23.96	0.249	23.87	0.244
			50	56	23.01	0.200	22.94	0.197	22.86	0.193
			100	0	22.97	0.198	22.90	0.195	22.94	0.197
		DFT-S-OFDM 16QAM	1	1	22.90	0.195	**22.91**	**0.195**	22.75	0.188
		DFT-S-OFDM 64QAM	1	1	21.68	0.147	21.68	0.147	21.50	0.141
		CP-OFDM QPSK	1	1	**22.49**	**0.177**	22.33	0.171	22.37	0.173
		CP-OFDM 16QAM	1	1	**22.04**	**0.160**	22.03	0.160	21.91	0.155
		CP-OFDM 64QAM	1	1	20.36	0.109	20.50	0.112	20.27	0.106

NR Band 12										
BW (MHz)	SCS (kHz)	Modulation	RB Size	RB Offset	Conducted Output Power					
					140300 (701.5 MHz)		141500 (707.5 MHz)		142700 (713.5 MHz)	
					(dBm)	(W)	(dBm)	(W)	(dBm)	(W)
5	15	DFT-S-OFDM BPSK	1	1	**24.65**	**0.292**	24.53	0.284	24.35	0.272
			1	13	24.64	0.291	24.53	0.284	24.35	0.272
			1	23	24.54	0.284	24.30	0.269	24.16	0.261
			12	0	24.18	0.262	24.13	0.259	23.85	0.243
			12	7	24.63	0.290	24.52	0.283	24.34	0.272
			12	13	24.23	0.265	24.00	0.251	23.83	0.242
			25	0	24.22	0.264	24.10	0.257	23.78	0.239
		DFT-S-OFDM QPSK	1	1	**24.60**	**0.288**	24.48	0.281	24.31	0.270
			1	13	24.11	0.258	24.46	0.279	24.29	0.269
			1	23	24.43	0.277	24.34	0.272	24.14	0.259
			12	0	23.67	0.233	23.37	0.217	23.17	0.207
			12	7	24.16	0.261	24.47	0.280	24.29	0.269
			12	13	23.63	0.231	23.48	0.223	23.45	0.221
			25	0	23.67	0.233	23.51	0.224	23.21	0.209
		DFT-S-OFDM 16QAM	1	1	**23.55**	**0.226**	23.39	0.218	23.21	0.209
		DFT-S-OFDM 64QAM	1	1	22.28	0.169	22.16	0.164	21.96	0.157
		CP-OFDM QPSK	1	1	**23.20**	**0.209**	23.07	0.203	22.76	0.189
		CP-OFDM 16QAM	1	1	**22.70**	**0.186**	22.53	0.179	22.32	0.171
		CP-OFDM 64QAM	1	1	21.05	0.127	21.09	0.129	20.80	0.120

NR Band 12										
BW (MHz)	SCS (kHz)	Modulation	RB Size	RB Offset	Conducted Output Power					
					140800 (704 MHz)		141500 (707.5 MHz)		142200 (711 MHz)	
					(dBm)	(W)	(dBm)	(W)	(dBm)	(W)
10	15	DFT-S-OFDM BPSK	1	1	**24.57**	**0.286**	24.44	0.278	24.40	0.275
			1	26	24.46	0.279	24.39	0.275	24.32	0.270
			1	50	24.53	0.284	24.35	0.272	24.45	0.279
			25	0	24.09	0.256	23.86	0.243	23.88	0.244
			25	14	24.56	0.286	24.34	0.272	24.32	0.270
			25	27	23.96	0.249	23.93	0.247	23.99	0.251
			50	0	24.05	0.254	24.02	0.252	23.89	0.245
		DFT-S-OFDM QPSK	1	1	**24.56**	**0.286**	24.53	0.284	24.38	0.274
			1	26	24.46	0.279	24.34	0.272	24.47	0.280
			1	50	24.54	0.284	24.51	0.282	24.43	0.277
			25	0	23.58	0.228	23.55	0.226	23.26	0.212
			25	14	23.64	0.231	24.45	0.279	24.35	0.272
			25	27	23.70	0.234	23.33	0.215	23.38	0.218
			50	0	23.46	0.222	23.48	0.223	23.29	0.213
		DFT-S-OFDM 16QAM	1	1	**23.49**	**0.223**	23.34	0.216	23.34	0.216
		DFT-S-OFDM 64QAM	1	1	21.98	0.158	21.94	0.156	21.99	0.158
		CP-OFDM QPSK	1	1	**23.03**	**0.201**	22.99	0.199	22.91	0.195
		CP-OFDM 16QAM	1	1	**22.58**	**0.181**	22.40	0.174	22.42	0.175
		CP-OFDM 64QAM	1	1	21.00	0.126	20.87	0.122	20.89	0.123

NR Band 12										
BW (MHz)	SCS (kHz)	Modulation	RB Size	RB Offset	Conducted Output Power					
					141300 (706.5 MHz)		141500 (707.5 MHz)		141700 (708.5 MHz)	
					(dBm)	(W)	(dBm)	(W)	(dBm)	(W)
15	15	DFT-S-OFDM BPSK	1	1	24.68	0.294	24.74	0.298	24.68	0.294
			1	40	24.71	0.296	24.69	0.294	**24.78**	**0.301**
			1	77	24.63	0.290	24.71	0.296	24.68	0.294
			36	0	24.09	0.256	24.21	0.264	24.14	0.259
			36	22	24.65	0.292	24.64	0.291	24.60	0.288
			36	43	24.14	0.259	24.20	0.263	24.20	0.263
			75	0	24.09	0.256	24.31	0.270	24.27	0.267
		DFT-S-OFDM QPSK	1	1	24.70	0.295	**24.79**	**0.301**	24.77	0.300
			1	40	24.77	0.300	24.75	0.299	24.58	0.287
			1	77	24.77	0.300	24.72	0.296	24.62	0.290
			36	0	23.65	0.232	23.82	0.241	23.78	0.239
			36	22	24.77	0.300	24.72	0.296	24.67	0.293
			36	43	23.81	0.240	23.68	0.233	23.68	0.233
			75	0	23.68	0.233	23.70	0.234	23.60	0.229
		DFT-S-OFDM 16QAM	1	1	23.69	0.234	**23.76**	**0.238**	23.73	0.236
		DFT-S-OFDM 64QAM	1	1	22.26	0.168	22.32	0.171	22.28	0.169
		CP-OFDM QPSK	1	1	23.15	0.207	23.16	0.207	**23.24**	**0.211**
		CP-OFDM 16QAM	1	1	22.71	0.187	**22.84**	**0.192**	22.74	0.188
		CP-OFDM 64QAM	1	1	21.13	0.130	21.31	0.135	21.28	0.134

NR Band 13										
BW (MHz)	SCS (kHz)	Modulation	RB Size	RB Offset	Conducted Output Power					
					155900 (779.5 MHz)		156400 (782 MHz)		156900 (784.5 MHz)	
					(dBm)	(W)	(dBm)	(W)	(dBm)	(W)
5	15	DFT-S-OFDM BPSK	1	1	24.41	0.276	24.49	0.281	24.45	0.279
			1	13	24.56	0.286	24.58	0.287	**24.70**	**0.295**
			1	23	24.57	0.286	24.52	0.283	24.36	0.273
			12	0	23.15	0.207	23.13	0.206	23.23	0.210
			12	7	24.01	0.252	24.06	0.255	24.07	0.255
			12	13	23.97	0.249	24.19	0.262	24.09	0.256
			25	0	24.11	0.258	24.20	0.263	24.10	0.257
		DFT-S-OFDM QPSK	1	1	24.22	0.264	24.47	0.280	24.42	0.277
			1	13	24.40	0.275	24.46	0.279	24.37	0.274
			1	23	**24.65**	**0.292**	24.39	0.275	24.27	0.267
			12	0	23.59	0.229	23.57	0.228	23.64	0.231
			12	7	24.63	0.290	24.51	0.282	24.54	0.284
			12	13	23.65	0.232	23.58	0.228	23.60	0.229
			25	0	23.61	0.230	23.70	0.234	23.60	0.229
		DFT-S-OFDM 16QAM	1	1	23.02	0.200	22.97	0.198	**23.56**	**0.227**
		DFT-S-OFDM 64QAM	1	1	21.91	0.155	21.97	0.157	21.95	0.157
		CP-OFDM QPSK	1	1	22.86	0.193	**23.01**	**0.200**	23.00	0.200
		CP-OFDM 16QAM	1	1	**22.44**	**0.175**	22.28	0.169	22.39	0.173
		CP-OFDM 64QAM	1	1	20.96	0.125	20.83	0.121	20.83	0.121

NR Band 13										
BW (MHz)	SCS (kHz)	Modulation	RB Size	RB Offset	Conducted Output Power					
							156400 (782 MHz)			
							(dBm)	(W)		
10	15	DFT-S-OFDM BPSK	1	1	-	-	24.49	0.281	-	-
			1	26	-	-	**24.76**	**0.299**	-	-
			1	50	-	-	24.40	0.275	-	-
			25	0	-	-	20.43	0.110	-	-
			25	14	-	-	24.62	0.290	-	-
			25	27	-	-	24.11	0.258	-	-
			50	0	-	-	24.08	0.256	-	-
		DFT-S-OFDM QPSK	1	1	-	-	24.34	0.272	-	-
			1	26	-	-	**24.78**	**0.301**	-	-
			1	50	-	-	24.33	0.271	-	-
			25	0	-	-	23.71	0.235	-	-
			25	14	-	-	24.77	0.300	-	-
			25	27	-	-	23.68	0.233	-	-
			50	0	-	-	23.70	0.234	-	-
		DFT-S-OFDM 16QAM	1	1	-	-	**23.16**	**0.207**	-	-
		DFT-S-OFDM 64QAM	1	1	-	-	21.98	0.158	-	-
		CP-OFDM QPSK	1	1	-	-	**22.92**	**0.196**	-	-
		CP-OFDM 16QAM	1	1	-	-	**22.44**	**0.175**	-	-
		CP-OFDM 64QAM	1	1	-	-	20.94	0.124	-	-

NR Band 14										
BW (MHz)	SCS (kHz)	Modulation	RB Size	RB Offset	Conducted Output Power					
					158100 (790.5 MHz)		158600 (793 MHz)		159100 (795.5 MHz)	
					(dBm)	(W)	(dBm)	(W)	(dBm)	(W)
5	15	DFT-S-OFDM BPSK	1	1	24.40	0.275	24.43	0.277	**24.61**	**0.289**
			1	13	24.33	0.271	24.35	0.272	24.53	0.284
			1	23	24.31	0.270	24.36	0.273	24.56	0.286
			12	0	23.91	0.246	23.98	0.250	24.05	0.254
			12	7	24.39	0.275	24.33	0.271	24.52	0.283
			12	13	23.82	0.241	23.91	0.246	24.06	0.255
			25	0	23.88	0.244	23.83	0.242	24.07	0.255
		DFT-S-OFDM QPSK	1	1	24.42	0.277	24.49	0.281	**24.73**	**0.297**
			1	13	24.41	0.276	24.45	0.279	24.64	0.291
			1	23	24.37	0.274	24.48	0.281	24.64	0.291
			12	0	23.38	0.218	23.43	0.220	23.66	0.232
			12	7	24.36	0.273	24.40	0.275	24.64	0.291
			12	13	23.57	0.228	23.47	0.222	23.81	0.240
			25	0	23.57	0.228	23.47	0.222	23.65	0.232
		DFT-S-OFDM 16QAM	1	1	23.48	0.223	23.53	0.225	**23.63**	**0.231**
		DFT-S-OFDM 64QAM	1	1	21.97	0.157	21.93	0.156	22.10	0.162
		CP-OFDM QPSK	1	1	22.91	0.195	23.03	0.201	**23.18**	**0.208**
		CP-OFDM 16QAM	1	1	22.43	0.175	22.39	0.173	**22.69**	**0.186**
		CP-OFDM 64QAM	1	1	21.09	0.129	20.94	0.124	21.14	0.130

NR Band 14										
BW (MHz)	SCS (kHz)	Modulation	RB Size	RB Offset	Conducted Output Power					
							158600 (793 MHz)			
							(dBm)	(W)		
10	15	DFT-S-OFDM BPSK	1	1	-	-	24.51	0.282	-	-
			1	26	-	-	**24.55**	**0.285**	-	-
			1	50	-	-	24.44	0.278	-	-
			25	0	-	-	24.19	0.262	-	-
			25	14	-	-	24.54	0.284	-	-
			25	27	-	-	23.97	0.249	-	-
			50	0	-	-	24.12	0.258	-	-
		DFT-S-OFDM QPSK	1	1	-	-	24.70	0.295	-	-
			1	26	-	-	**24.90**	**0.309**	-	-
			1	50	-	-	24.82	0.303	-	-
			25	0	-	-	23.68	0.233	-	-
			25	14	-	-	24.61	0.289	-	-
			25	27	-	-	23.58	0.228	-	-
			50	0	-	-	23.71	0.235	-	-
		DFT-S-OFDM 16QAM	1	1	-	-	**24.08**	**0.256**	-	-
		DFT-S-OFDM 64QAM	1	1	-	-	22.00	0.158	-	-
		CP-OFDM QPSK	1	1	-	-	**23.03**	**0.201**	-	-
		CP-OFDM 16QAM	1	1	-	-	**22.54**	**0.179**	-	-
		CP-OFDM 64QAM	1	1	-	-	20.91	0.123	-	-

NR Band 25/2										
BW (MHz)	SCS (kHz)	Modulation	RB Size	RB Offset	Conducted Output Power					
					370500 (1 852.5 MHz)		376500 (1 882.5 MHz)		382500 (1 912.5 MHz)	
					(dBm)	(W)	(dBm)	(W)	(dBm)	(W)
5	15	DFT-S-OFDM BPSK	1	1	23.41	0.219	23.42	0.220	23.46	0.222
			1	13	23.45	0.221	23.41	0.219	23.45	0.221
			1	23	**23.47**	**0.222**	23.46	0.222	23.44	0.221
			12	0	22.95	0.197	22.91	0.195	22.93	0.196
			12	7	23.43	0.220	23.45	0.221	23.41	0.219
			12	13	22.94	0.197	22.96	0.198	22.92	0.196
			25	0	22.95	0.197	22.98	0.199	22.97	0.198
		DFT-S-OFDM QPSK	1	1	23.42	0.220	23.43	0.220	**23.49**	**0.223**
			1	13	23.45	0.221	23.43	0.220	23.46	0.222
			1	23	23.41	0.219	23.44	0.221	23.46	0.222
			12	0	22.47	0.177	22.42	0.175	22.43	0.175
			12	7	23.45	0.221	23.40	0.219	23.42	0.220
			12	13	22.46	0.176	22.41	0.174	22.35	0.172
			25	0	22.43	0.175	22.47	0.177	22.48	0.177
		DFT-S-OFDM 16QAM	1	1	**22.43**	**0.175**	22.43	0.175	22.40	0.174
		DFT-S-OFDM 64QAM	1	1	21.10	0.129	21.11	0.129	21.13	0.130
		CP-OFDM QPSK	1	1	**22.01**	**0.159**	21.97	0.157	21.92	0.156
		CP-OFDM 16QAM	1	1	21.45	0.140	21.46	0.140	**21.55**	**0.143**
		CP-OFDM 64QAM	1	1	19.92	0.098	19.84	0.096	20.00	0.100

NR Band 25/2										
BW (MHz)	SCS (kHz)	Modulation	RB Size	RB Offset	Conducted Output Power					
					371000 (1 855 MHz)		376500 (1 882.5 MHz)		382000 (1 910 MHz)	
					(dBm)	(W)	(dBm)	(W)	(dBm)	(W)
10	15	DFT-S-OFDM BPSK	1	1	23.54	0.226	23.47	0.222	23.45	0.221
			1	26	23.51	0.224	23.42	0.220	23.44	0.221
			1	50	**23.60**	**0.229**	23.42	0.220	23.48	0.223
			25	0	23.09	0.204	23.08	0.203	23.13	0.206
			25	14	23.47	0.222	23.57	0.228	23.51	0.224
			25	27	23.08	0.203	23.17	0.207	23.02	0.200
			50	0	23.02	0.200	23.14	0.206	23.04	0.201
		DFT-S-OFDM QPSK	1	1	23.50	0.224	23.63	0.231	23.42	0.220
			1	26	23.45	0.221	23.54	0.226	23.47	0.222
			1	50	23.61	0.230	**23.67**	**0.233**	23.45	0.221
			25	0	22.54	0.179	22.57	0.181	22.46	0.176
			25	14	23.43	0.220	23.57	0.228	23.50	0.224
			25	27	22.53	0.179	22.63	0.183	22.66	0.185
			50	0	22.52	0.179	22.66	0.185	22.72	0.187
		DFT-S-OFDM 16QAM	1	1	22.48	0.177	22.62	0.183	**22.68**	**0.185**
		DFT-S-OFDM 64QAM	1	1	21.25	0.133	21.08	0.128	20.92	0.124
		CP-OFDM QPSK	1	1	**22.10**	**0.162**	21.96	0.157	21.86	0.153
		CP-OFDM 16QAM	1	1	21.49	0.141	**21.57**	**0.144**	21.44	0.139
		CP-OFDM 64QAM	1	1	20.04	0.101	20.05	0.101	19.90	0.098

NR Band 25/2										
BW (MHz)	SCS (kHz)	Modulation	RB Size	RB Offset	Conducted Output Power					
					371500 (1 857.5 MHz)		376500 (1 882.5 MHz)		381500 (1 907.5 MHz)	
					(dBm)	(W)	(dBm)	(W)	(dBm)	(W)
15	15	DFT-S-OFDM BPSK	1	1	23.57	0.228	23.53	0.225	**23.66**	**0.232**
			1	40	23.53	0.225	23.52	0.225	23.60	0.229
			1	77	23.53	0.225	23.55	0.226	23.57	0.228
			36	0	23.03	0.201	22.96	0.198	23.09	0.204
			36	22	23.46	0.222	23.41	0.219	23.53	0.225
			36	43	23.07	0.203	23.06	0.202	23.04	0.201
			75	0	23.06	0.202	23.04	0.201	23.04	0.201
		DFT-S-OFDM QPSK	1	1	23.49	0.223	23.45	0.221	**23.61**	**0.230**
			1	40	23.45	0.221	23.49	0.223	23.46	0.222
			1	77	23.35	0.216	23.48	0.223	23.55	0.226
			36	0	22.43	0.175	22.51	0.178	22.60	0.182
			36	22	23.46	0.222	23.54	0.226	23.56	0.227
			36	43	22.35	0.172	22.51	0.178	22.79	0.190
			75	0	22.47	0.177	22.59	0.182	22.80	0.191
		DFT-S-OFDM 16QAM	1	1	22.59	0.182	22.44	0.175	**22.63**	**0.183**
		DFT-S-OFDM 64QAM	1	1	21.06	0.128	21.08	0.128	21.26	0.134
		CP-OFDM QPSK	1	1	22.08	0.161	22.02	0.159	**22.21**	**0.166**
		CP-OFDM 16QAM	1	1	21.63	0.146	21.51	0.142	**21.70**	**0.148**
		CP-OFDM 64QAM	1	1	20.10	0.102	20.07	0.102	20.10	0.102

NR Band 25/2										
BW (MHz)	SCS (kHz)	Modulation	RB Size	RB Offset	Conducted Output Power					
					372000 (1 860 MHz)		376500 (1 882.5 MHz)		381000 (1 905 MHz)	
					(dBm)	(W)	(dBm)	(W)	(dBm)	(W)
20	15	DFT-S-OFDM BPSK	1	1	23.55	0.226	**23.60**	**0.229**	23.57	0.228
			1	53	23.48	0.223	23.50	0.224	23.53	0.225
			1	104	23.45	0.221	23.59	0.229	23.49	0.223
			50	0	23.15	0.207	23.10	0.204	23.02	0.200
			50	28	23.45	0.221	23.55	0.226	23.53	0.225
			50	56	22.99	0.199	23.10	0.204	23.11	0.205
			100	0	22.96	0.198	23.13	0.206	23.12	0.205
		DFT-S-OFDM QPSK	1	1	23.49	0.223	**23.59**	**0.229**	23.47	0.222
			1	53	23.43	0.220	23.52	0.225	23.47	0.222
			1	104	23.42	0.220	23.54	0.226	23.38	0.218
			50	0	22.57	0.181	22.52	0.179	22.51	0.178
			50	28	23.39	0.218	23.58	0.228	23.39	0.218
			50	56	22.47	0.177	22.45	0.176	22.60	0.182
			100	0	22.53	0.179	22.47	0.177	22.57	0.181
		DFT-S-OFDM 16QAM	1	1	22.50	0.178	22.51	0.178	**22.59**	**0.182**
		DFT-S-OFDM 64QAM	1	1	21.12	0.129	21.19	0.132	20.96	0.125
		CP-OFDM QPSK	1	1	**22.10**	**0.162**	22.03	0.160	22.02	0.159
		CP-OFDM 16QAM	1	1	21.49	0.141	**21.66**	**0.147**	21.62	0.145
		CP-OFDM 64QAM	1	1	20.06	0.101	20.00	0.100	20.08	0.102

NR Band 26/5_Part 22										
BW (MHz)	SCS (kHz)	Modulation	RB Size	RB Offset	Conducted Output Power					
					165300 (826.5 MHz)		167300 (836.5 MHz)		169300 (846.5 MHz)	
					(dBm)	(W)	(dBm)	(W)	(dBm)	(W)
5	15	DFT-S-OFDM BPSK	1	1	24.23	0.265	24.25	0.266	**24.29**	**0.269**
			1	13	24.18	0.262	24.22	0.264	24.24	0.265
			1	23	24.14	0.259	24.23	0.265	24.22	0.264
			12	0	23.77	0.238	23.81	0.240	23.86	0.243
			12	7	24.20	0.263	24.20	0.263	24.22	0.264
			12	13	23.67	0.233	23.77	0.238	23.86	0.243
			25	0	23.64	0.231	23.65	0.232	23.83	0.242
		DFT-S-OFDM QPSK	1	1	24.14	0.259	**24.32**	**0.270**	24.30	0.269
			1	13	24.05	0.254	24.26	0.267	24.28	0.268
			1	23	24.08	0.256	24.31	0.270	24.21	0.264
			12	0	23.26	0.212	23.23	0.210	23.31	0.214
			12	7	24.14	0.259	24.23	0.265	24.24	0.265
			12	13	23.19	0.208	23.25	0.211	23.16	0.207
			25	0	23.24	0.211	23.35	0.216	23.40	0.219
		DFT-S-OFDM 16QAM	1	1	23.17	0.207	**23.35**	**0.216**	23.19	0.208
		DFT-S-OFDM 64QAM	1	1	21.69	0.148	21.78	0.151	21.71	0.148
		CP-OFDM QPSK	1	1	22.67	0.185	22.68	0.185	**22.89**	**0.195**
		CP-OFDM 16QAM	1	1	22.23	0.167	22.16	0.164	**22.38**	**0.173**
		CP-OFDM 64QAM	1	1	20.78	0.120	20.74	0.119	20.82	0.121

NR Band 26/5_Part 22										
BW (MHz)	SCS (kHz)	Modulation	RB Size	RB Offset	Conducted Output Power					
					165800 (829 MHz)		167300 (836.5 MHz)		168800 (844 MHz)	
					(dBm)	(W)	(dBm)	(W)	(dBm)	(W)
10	15	DFT-S-OFDM BPSK	1	1	24.34	0.272	24.39	0.275	**24.46**	**0.279**
			1	26	24.18	0.262	24.33	0.271	24.37	0.274
			1	50	24.24	0.265	24.29	0.269	24.34	0.272
			25	0	23.83	0.242	23.79	0.239	23.99	0.251
			25	14	24.33	0.271	24.41	0.276	24.38	0.274
			25	27	23.77	0.238	23.92	0.247	23.87	0.244
			50	0	23.66	0.232	23.95	0.248	23.95	0.248
		DFT-S-OFDM QPSK	1	1	24.19	0.262	24.48	0.281	**24.55**	**0.285**
			1	26	24.25	0.266	24.42	0.277	24.45	0.279
			1	50	24.14	0.259	24.36	0.273	24.33	0.271
			25	0	23.27	0.212	23.48	0.223	23.56	0.227
			25	14	24.18	0.262	24.34	0.272	24.38	0.274
			25	27	23.29	0.213	23.29	0.213	23.32	0.215
			50	0	23.29	0.213	23.24	0.211	23.56	0.227
		DFT-S-OFDM 16QAM	1	1	23.16	0.207	23.44	0.221	**23.50**	**0.224**
		DFT-S-OFDM 64QAM	1	1	21.72	0.149	21.94	0.156	21.87	0.154
		CP-OFDM QPSK	1	1	22.65	0.184	22.88	0.194	**22.94**	**0.197**
		CP-OFDM 16QAM	1	1	22.26	0.168	22.32	0.171	**22.45**	**0.176**
		CP-OFDM 64QAM	1	1	20.74	0.119	20.84	0.121	20.87	0.122

NR Band 26/5_Part 22										
BW (㎒)	SCS (㎑)	Modulation	RB Size	RB Offset	Conducted Output Power					
					166300 (831.5 ㎒)		167300 (836.5 ㎒)		168300 (841.5 ㎒)	
					(dB m)	(W)	(dB m)	(W)	(dB m)	(W)
15	15	DFT-S-OFDM BPSK	1	1	24.19	0.262	24.29	0.269	24.44	0.278
			1	40	24.13	0.259	24.29	0.269	24.48	0.281
			1	77	24.14	0.259	24.20	0.263	**24.51**	**0.282**
			36	0	23.69	0.234	23.71	0.235	23.99	0.251
			36	22	24.10	0.257	24.36	0.273	24.48	0.281
			36	43	23.79	0.239	23.81	0.240	24.04	0.254
			75	0	23.73	0.236	23.89	0.245	23.88	0.244
		DFT-S-OFDM QPSK	1	1	24.29	0.269	24.21	0.264	24.39	0.275
			1	40	24.11	0.258	24.39	0.275	**24.54**	**0.284**
			1	77	24.14	0.259	24.38	0.274	24.36	0.273
			36	0	23.25	0.211	23.39	0.218	23.49	0.223
			36	22	24.15	0.260	24.33	0.271	24.45	0.279
			36	43	23.17	0.207	23.19	0.208	23.30	0.214
			75	0	23.07	0.203	23.33	0.215	23.35	0.216
		DFT-S-OFDM 16QAM	1	1	23.21	0.209	23.23	0.210	**23.37**	**0.217**
		DFT-S-OFDM 64QAM	1	1	21.60	0.145	21.69	0.148	21.86	0.153
		CP-OFDM QPSK	1	1	22.79	0.190	22.69	0.186	**22.99**	**0.199**
		CP-OFDM 16QAM	1	1	22.28	0.169	22.25	0.168	**22.46**	**0.176**
		CP-OFDM 64QAM	1	1	20.76	0.119	20.70	0.117	20.92	0.124

NR Band 26/5_Part 22										
BW (㎒)	SCS (㎑)	Modulation	RB Size	RB Offset	Conducted Output Power					
					166800 (834 ㎒)		167300 (836.5 ㎒)		167800 (839 ㎒)	
					(dB m)	(W)	(dB m)	(W)	(dB m)	(W)
20	15	DFT-S-OFDM BPSK	1	1	24.24	0.265	24.30	0.269	24.35	0.272
			1	53	24.07	0.255	**24.46**	**0.279**	24.24	0.265
			1	104	24.06	0.255	24.30	0.269	24.35	0.272
			50	0	23.65	0.232	23.89	0.245	23.92	0.247
			50	28	24.22	0.264	24.10	0.257	24.35	0.272
			50	56	23.68	0.233	23.84	0.242	23.84	0.242
			100	0	23.66	0.232	23.84	0.242	23.90	0.245
		DFT-S-OFDM QPSK	1	1	24.30	0.269	24.11	0.258	24.32	0.270
			1	53	24.36	0.273	24.26	0.267	24.30	0.269
			1	104	24.27	0.267	24.43	0.277	24.17	0.261
			50	0	23.37	0.217	23.24	0.211	23.50	0.224
			50	28	24.07	0.255	24.34	0.272	**24.45**	**0.279**
			50	56	23.16	0.207	23.40	0.219	23.41	0.219
			100	0	23.27	0.212	23.34	0.216	23.27	0.212
		DFT-S-OFDM 16QAM	1	1	23.18	0.208	**23.34**	**0.216**	23.31	0.214
		DFT-S-OFDM 64QAM	1	1	21.58	0.144	21.95	0.157	21.82	0.152
		CP-OFDM QPSK	1	1	22.75	0.188	22.94	0.197	**22.98**	**0.199**
		CP-OFDM 16QAM	1	1	**22.37**	**0.173**	22.32	0.171	22.29	0.169
		CP-OFDM 64QAM	1	1	20.66	0.116	20.80	0.120	20.76	0.119

NR Band 26_Part 90										
BW (㎒)	SCS (㎑)	Modulation	RB Size	RB Offset	Conducted Output Power					
					163300 (816.5 ㎒)		163800 (819 ㎒)		164300 (821.5 ㎒)	
					(dB m)	(W)	(dB m)	(W)	(dB m)	(W)
5	15	DFT-S-OFDM BPSK	1	1	24.23	0.265	**24.43**	**0.277**	24.40	0.275
			1	13	24.16	0.261	24.41	0.276	24.36	0.273
			1	23	24.15	0.260	24.40	0.275	24.38	0.274
			12	0	23.72	0.236	23.94	0.248	23.94	0.248
			12	7	24.22	0.264	24.36	0.273	24.35	0.272
			12	13	23.71	0.235	24.03	0.253	23.97	0.249
			25	0	23.78	0.239	23.91	0.246	23.96	0.249
		DFT-S-OFDM QPSK	1	1	24.30	0.269	**24.37**	**0.274**	24.17	0.261
			1	13	24.21	0.264	24.30	0.269	24.15	0.260
			1	23	24.22	0.264	24.30	0.269	24.17	0.261
			12	0	23.34	0.216	23.23	0.210	23.15	0.207
			12	7	24.25	0.266	24.30	0.269	24.15	0.260
			12	13	23.33	0.215	23.25	0.211	23.31	0.214
			25	0	23.40	0.219	23.35	0.216	23.31	0.214
		DFT-S-OFDM 16QAM	1	1	23.18	0.208	**23.51**	**0.224**	23.44	0.221
		DFT-S-OFDM 64QAM	1	1	21.70	0.148	21.99	0.158	21.85	0.153
		CP-OFDM QPSK	1	1	22.79	0.190	**22.97**	**0.198**	22.81	0.191
		CP-OFDM 16QAM	1	1	22.25	0.168	22.34	0.171	**22.42**	**0.175**
		CP-OFDM 64QAM	1	1	20.82	0.121	20.98	0.125	20.99	0.126

NR Band 26_Part 90										
BW (㎒)	SCS (㎑)	Modulation	RB Size	RB Offset	Conducted Output Power					
							163800 (819 ㎒)			
							(dB m)	(W)		
10	15	DFT-S-OFDM BPSK	1	1	-	-	24.43	0.277	-	-
			1	26	-	-	24.37	0.274	-	-
			1	50	-	-	**24.46**	**0.279**	-	-
			25	0	-	-	24.00	0.251	-	-
			25	14	-	-	24.41	0.276	-	-
			25	27	-	-	23.99	0.251	-	-
			50	0	-	-	23.91	0.246	-	-
		DFT-S-OFDM QPSK	1	1	-	-	**24.47**	**0.280**	-	-
			1	26	-	-	24.42	0.277	-	-
			1	50	-	-	24.36	0.273	-	-
			25	0	-	-	23.58	0.228	-	-
			25	14	-	-	24.41	0.276	-	-
			25	27	-	-	23.35	0.216	-	-
			50	0	-	-	23.42	0.220	-	-
		DFT-S-OFDM 16QAM	1	1	-	-	**23.44**	**0.221**	-	-
		DFT-S-OFDM 64QAM	1	1	-	-	22.06	0.161	-	-
		CP-OFDM QPSK	1	1	-	-	**22.93**	**0.196**	-	-
		CP-OFDM 16QAM	1	1	-	-	**22.54**	**0.179**	-	-
		CP-OFDM 64QAM	1	1	-	-	20.92	0.124	-	-

NR Band 66										
BW (MHz)	SCS (kHz)	Modulation	RB Size	RB Offset	Conducted Output Power					
					342500 (1 712.5 MHz)		349000 (1 745.0 MHz)		355500 (1 777.5 MHz)	
					(dBm)	(W)	(dBm)	(W)	(dBm)	(W)
5	15	DFT-S-OFDM BPSK	1	1	22.74	0.188	22.64	0.184	22.68	0.185
			1	13	**22.82**	**0.191**	22.58	0.181	22.71	0.187
			1	23	22.69	0.186	22.71	0.187	22.72	0.187
			12	0	22.14	0.164	22.10	0.162	22.26	0.168
			12	7	22.74	0.188	22.71	0.187	22.65	0.184
			12	13	22.14	0.164	22.13	0.163	22.18	0.165
			25	0	22.32	0.171	22.08	0.161	22.23	0.167
		DFT-S-OFDM QPSK	1	1	**22.95**	**0.197**	22.56	0.180	22.78	0.190
			1	13	22.70	0.186	22.59	0.182	22.76	0.189
			1	23	22.78	0.190	22.62	0.183	22.66	0.185
			12	0	21.75	0.150	21.66	0.147	21.64	0.146
			12	7	22.66	0.185	22.60	0.182	22.64	0.184
			12	13	21.84	0.153	21.78	0.151	21.69	0.148
			25	0	21.88	0.154	21.71	0.148	21.83	0.152
		DFT-S-OFDM 16QAM	1	1	21.69	0.148	21.63	0.146	**21.72**	**0.149**
		DFT-S-OFDM 64QAM	1	1	20.25	0.106	20.11	0.103	20.10	0.102
		CP-OFDM QPSK	1	1	**21.14**	**0.130**	21.07	0.128	21.12	0.129
		CP-OFDM 16QAM	1	1	**20.71**	**0.118**	20.59	0.115	20.65	0.116
		CP-OFDM 64QAM	1	1	19.32	0.086	19.10	0.081	19.09	0.081

NR Band 66										
BW (MHz)	SCS (kHz)	Modulation	RB Size	RB Offset	Conducted Output Power					
					343000 (1 715.0 MHz)		349000 (1 745.0 MHz)		355000 (1 775.0 MHz)	
					(dBm)	(W)	(dBm)	(W)	(dBm)	(W)
10	15	DFT-S-OFDM BPSK	1	1	22.76	0.189	22.70	0.186	22.77	0.189
			1	26	**22.79**	**0.190**	22.61	0.182	22.73	0.187
			1	50	22.71	0.187	22.76	0.189	22.75	0.188
			25	0	22.29	0.169	22.14	0.164	22.17	0.165
			25	14	22.70	0.186	22.72	0.187	22.73	0.187
			25	27	22.30	0.170	22.24	0.167	22.29	0.169
			50	0	22.34	0.171	22.23	0.167	22.33	0.171
		DFT-S-OFDM QPSK	1	1	22.77	0.189	22.67	0.185	22.67	0.185
			1	26	22.81	0.191	22.77	0.189	22.71	0.187
			1	50	22.71	0.187	22.69	0.186	**22.82**	**0.191**
			25	0	21.69	0.148	21.59	0.144	21.90	0.155
			25	14	21.70	0.148	21.75	0.150	21.75	0.150
			25	27	21.62	0.145	21.76	0.150	21.64	0.146
			50	0	21.82	0.152	21.78	0.151	21.68	0.147
		DFT-S-OFDM 16QAM	1	1	**21.73**	**0.149**	21.63	0.146	21.68	0.147
		DFT-S-OFDM 64QAM	1	1	20.16	0.104	20.19	0.104	20.28	0.107
		CP-OFDM QPSK	1	1	21.21	0.132	21.21	0.132	**21.24**	**0.133**
		CP-OFDM 16QAM	1	1	20.79	0.120	20.75	0.119	**20.81**	**0.121**
		CP-OFDM 64QAM	1	1	19.22	0.084	19.28	0.085	19.37	0.086

NR Band 66										
BW (MHz)	SCS (kHz)	Modulation	RB Size	RB Offset	Conducted Output Power					
					343500 (1 717.5 MHz)		349000 (1 745.0 MHz)		354500 (1 772.5 MHz)	
					(dBm)	(W)	(dBm)	(W)	(dBm)	(W)
15	15	DFT-S-OFDM BPSK	1	1	22.81	0.191	22.82	0.191	22.70	0.186
			1	40	22.85	0.193	22.83	0.192	22.76	0.189
			1	77	**22.90**	**0.195**	22.80	0.191	22.60	0.182
			36	0	22.31	0.170	22.26	0.168	22.16	0.164
			36	22	22.88	0.194	22.79	0.190	22.78	0.190
			36	43	22.22	0.167	22.33	0.171	22.22	0.167
			75	0	22.31	0.170	22.41	0.174	22.15	0.164
		DFT-S-OFDM QPSK	1	1	22.80	0.191	**22.92**	**0.196**	22.69	0.186
			1	40	22.75	0.188	22.79	0.190	22.79	0.190
			1	77	22.85	0.193	22.72	0.187	22.76	0.189
			36	0	21.68	0.147	21.71	0.148	21.64	0.146
			36	22	22.72	0.187	22.86	0.193	22.64	0.184
			36	43	21.81	0.152	21.93	0.156	21.74	0.149
			75	0	21.95	0.157	21.92	0.156	21.62	0.145
		DFT-S-OFDM 16QAM	1	1	**21.82**	**0.152**	21.76	0.150	21.74	0.149
		DFT-S-OFDM 64QAM	1	1	20.24	0.106	20.34	0.108	20.27	0.106
		CP-OFDM QPSK	1	1	21.27	0.134	21.24	0.133	**21.30**	**0.135**
		CP-OFDM 16QAM	1	1	20.77	0.119	**20.91**	**0.123**	20.71	0.118
		CP-OFDM 64QAM	1	1	19.39	0.087	19.33	0.086	19.12	0.082

NR Band 66										
BW (MHz)	SCS (kHz)	Modulation	RB Size	RB Offset	Conducted Output Power					
					344000 (1 720.0 MHz)		349000 (1 745.0 MHz)		354000 (1 770.0 MHz)	
					(dBm)	(W)	(dBm)	(W)	(dBm)	(W)
20	15	DFT-S-OFDM BPSK	1	1	22.84	0.192	22.91	0.195	22.82	0.191
			1	53	22.86	0.193	22.81	0.191	22.91	0.195
			1	104	**22.94**	**0.197**	22.92	0.196	22.89	0.195
			50	0	22.44	0.175	22.36	0.172	22.29	0.169
			50	28	22.86	0.193	22.92	0.196	22.89	0.195
			50	56	22.34	0.171	22.31	0.170	22.37	0.173
			100	0	22.39	0.173	22.32	0.171	22.28	0.169
		DFT-S-OFDM QPSK	1	1	22.90	0.195	22.83	0.192	22.91	0.195
			1	53	22.80	0.191	**22.95**	**0.197**	22.89	0.195
			1	104	22.77	0.189	22.81	0.191	22.85	0.193
			50	0	21.94	0.156	21.76	0.150	21.74	0.149
			50	28	22.86	0.193	22.81	0.191	22.86	0.193
			50	56	21.85	0.153	21.99	0.158	21.71	0.148
			100	0	21.85	0.153	21.95	0.157	21.69	0.148
		DFT-S-OFDM 16QAM	1	1	21.74	0.149	**21.94**	**0.156**	21.86	0.153
		DFT-S-OFDM 64QAM	1	1	20.39	0.109	20.50	0.112	20.25	0.106
		CP-OFDM QPSK	1	1	21.44	0.139	**21.44**	**0.139**	21.29	0.135
		CP-OFDM 16QAM	1	1	**20.91**	**0.123**	20.83	0.121	20.80	0.120
		CP-OFDM 64QAM	1	1	19.43	0.088	19.37	0.086	19.29	0.085

NR Band 66										
BW (㎒)	SCS (㎑)	Modulation	RB Size	RB Offset	Conducted Output Power					
							349000 (1 745.0 ㎒)			
							(dB m)	(W)		
40	15	DFT-S-OFDM BPSK	1	1	-	-	**22.94**	**0.197**	-	-
			1	108	-	-	22.89	0.195	-	-
			1	214	-	-	22.91	0.195	-	-
			108	0	-	-	22.34	0.171	-	-
			108	54	-	-	22.91	0.195	-	-
			108	108	-	-	22.42	0.175	-	-
			216	0	-	-	22.37	0.173	-	-
		DFT-S-OFDM QPSK	1	1	-	-	**22.92**	**0.196**	-	-
			1	108	-	-	22.86	0.193	-	-
			1	214	-	-	22.89	0.195	-	-
			108	0	-	-	22.03	0.160	-	-
			108	54	-	-	22.89	0.195	-	-
			108	108	-	-	21.82	0.152	-	-
			216	0	-	-	22.02	0.159	-	-
		DFT-S-OFDM 16QAM	1	1	-	-	**21.94**	**0.156**	-	-
		DFT-S-OFDM 64QAM	1	1	-	-	20.49	0.112	-	-
		CP-OFDM QPSK	1	1	-	-	**21.48**	**0.141**	-	-
		CP-OFDM 16QAM	1	1	-	-	**20.90**	**0.123**	-	-
		CP-OFDM 64QAM	1	1	-	-	19.31	0.085	-	-

NR Band 71										
BW (MHz)	SCS (kHz)	Modulation	RB Size	RB Offset	Conducted Output Power					
					133100 (665.5 MHz)		136100 (680.5 MHz)		139100 (695.5 MHz)	
					(dBm)	(W)	(dBm)	(W)	(dBm)	(W)
5	15	DFT-S-OFDM BPSK	1	1	24.29	0.269	24.29	0.269	**24.46**	**0.279**
			1	13	24.29	0.269	24.29	0.269	24.40	0.275
			1	23	24.33	0.271	24.21	0.264	24.25	0.266
			12	0	23.88	0.244	23.73	0.236	24.00	0.251
			12	7	24.31	0.270	24.28	0.268	24.45	0.279
			12	13	23.81	0.240	23.82	0.241	23.98	0.250
			25	0	23.84	0.242	23.78	0.239	23.83	0.242
		DFT-S-OFDM QPSK	1	1	24.28	0.268	24.31	0.270	**24.44**	**0.278**
			1	13	24.32	0.270	24.31	0.270	24.44	0.278
			1	23	24.31	0.270	24.25	0.266	24.22	0.264
			12	0	23.29	0.213	23.27	0.212	23.26	0.212
			12	7	24.31	0.270	24.30	0.269	24.41	0.276
			12	13	23.29	0.213	23.31	0.214	23.44	0.221
			25	0	23.22	0.210	23.18	0.208	23.26	0.212
		DFT-S-OFDM 16QAM	1	1	23.20	0.209	23.35	0.216	**23.39**	**0.218**
		DFT-S-OFDM 64QAM	1	1	21.72	0.149	21.78	0.151	21.94	0.156
		CP-OFDM QPSK	1	1	22.78	0.190	22.74	0.188	**22.98**	**0.199**
		CP-OFDM 16QAM	1	1	22.35	0.172	22.21	0.166	**22.37**	**0.173**
		CP-OFDM 64QAM	1	1	20.70	0.117	20.72	0.118	20.82	0.121

NR Band 71										
BW (MHz)	SCS (kHz)	Modulation	RB Size	RB Offset	Conducted Output Power					
					133600 (668.0 MHz)		136100 (680.5 MHz)		138600 (693.0 MHz)	
					(dBm)	(W)	(dBm)	(W)	(dBm)	(W)
10	15	DFT-S-OFDM BPSK	1	1	**24.34**	**0.272**	24.10	0.257	24.23	0.265
			1	26	24.33	0.271	24.10	0.257	24.21	0.264
			1	50	24.29	0.269	24.28	0.268	24.26	0.267
			25	0	23.77	0.238	23.63	0.231	23.64	0.231
			25	14	24.33	0.271	24.08	0.256	24.18	0.262
			25	27	23.75	0.237	23.51	0.224	23.64	0.231
			50	0	23.82	0.241	23.60	0.229	23.79	0.239
		DFT-S-OFDM QPSK	1	1	**24.33**	**0.271**	24.25	0.266	24.32	0.270
			1	26	24.32	0.270	24.02	0.252	24.26	0.267
			1	50	24.25	0.266	24.33	0.271	24.25	0.266
			25	0	23.20	0.209	23.12	0.205	23.33	0.215
			25	14	24.31	0.270	24.02	0.252	24.32	0.270
			25	27	23.43	0.220	23.18	0.208	23.13	0.206
			50	0	23.21	0.209	22.99	0.199	23.12	0.205
		DFT-S-OFDM 16QAM	1	1	23.30	0.214	23.06	0.202	**23.33**	**0.215**
		DFT-S-OFDM 64QAM	1	1	21.84	0.153	21.60	0.145	21.74	0.149
		CP-OFDM QPSK	1	1	**22.94**	**0.197**	22.64	0.184	22.79	0.190
		CP-OFDM 16QAM	1	1	**22.29**	**0.169**	22.13	0.163	22.29	0.169
		CP-OFDM 64QAM	1	1	20.88	0.122	20.65	0.116	20.73	0.118

NR Band 71										
BW (MHz)	SCS (kHz)	Modulation	RB Size	RB Offset	Conducted Output Power					
					134100 (670.5 MHz)		136100 (680.5 MHz)		138100 (690.5 MHz)	
					(dBm)	(W)	(dBm)	(W)	(dBm)	(W)
15	15	DFT-S-OFDM BPSK	1	1	24.41	0.276	24.40	0.275	24.32	0.270
			1	40	24.48	0.281	24.33	0.271	24.34	0.272
			1	77	**24.49**	**0.281**	24.31	0.270	24.29	0.269
			36	0	23.84	0.242	23.87	0.244	23.88	0.244
			36	22	24.37	0.274	24.39	0.275	24.37	0.274
			36	43	23.89	0.245	23.86	0.243	23.72	0.236
			75	0	23.97	0.249	23.84	0.242	23.78	0.239
		DFT-S-OFDM QPSK	1	1	24.31	0.270	24.45	0.279	24.22	0.264
			1	40	24.35	0.272	**24.51**	**0.282**	24.29	0.269
			1	77	24.39	0.275	24.50	0.282	24.23	0.265
			36	0	23.42	0.220	23.35	0.216	23.19	0.208
			36	22	24.37	0.274	24.40	0.275	24.33	0.271
			36	43	23.39	0.218	23.36	0.217	23.25	0.211
			75	0	23.48	0.223	23.44	0.221	23.31	0.214
		DFT-S-OFDM 16QAM	1	1	**23.49**	**0.223**	23.30	0.214	23.36	0.217
		DFT-S-OFDM 64QAM	1	1	22.00	0.158	21.82	0.152	21.92	0.156
		CP-OFDM QPSK	1	1	22.95	0.197	**22.97**	**0.198**	22.72	0.187
		CP-OFDM 16QAM	1	1	22.34	0.171	22.39	0.173	**22.40**	**0.174**
		CP-OFDM 64QAM	1	1	20.83	0.121	20.82	0.121	20.91	0.123

NR Band 71										
BW (MHz)	SCS (kHz)	Modulation	RB Size	RB Offset	Conducted Output Power					
					134600 (673.0 MHz)		136100 (680.5 MHz)		137600 (688.0 MHz)	
					(dBm)	(W)	(dBm)	(W)	(dBm)	(W)
20	15	DFT-S-OFDM BPSK	1	1	24.37	0.274	24.32	0.270	24.42	0.277
			1	53	24.30	0.269	24.22	0.264	**24.47**	**0.280**
			1	104	24.29	0.269	24.34	0.272	24.32	0.270
			50	0	23.80	0.240	23.88	0.244	23.96	0.249
			50	28	24.45	0.279	24.37	0.274	24.34	0.272
			50	56	23.88	0.244	23.77	0.238	23.99	0.251
			100	0	23.79	0.239	23.81	0.240	23.89	0.245
		DFT-S-OFDM QPSK	1	1	24.27	0.267	24.27	0.267	24.41	0.276
			1	53	24.29	0.269	24.28	0.268	24.43	0.277
			1	104	**24.46**	**0.279**	24.31	0.270	24.39	0.275
			50	0	23.51	0.224	23.45	0.221	23.34	0.216
			50	28	24.27	0.267	24.42	0.277	24.40	0.275
			50	56	23.39	0.218	23.28	0.213	23.56	0.227
			100	0	23.25	0.211	23.46	0.222	23.31	0.214
		DFT-S-OFDM 16QAM	1	1	23.32	0.215	23.36	0.217	**23.47**	**0.222**
		DFT-S-OFDM 64QAM	1	1	21.85	0.153	21.88	0.154	21.82	0.152
		CP-OFDM QPSK	1	1	**22.86**	**0.193**	22.82	0.191	22.85	0.193
		CP-OFDM 16QAM	1	1	**22.40**	**0.174**	22.28	0.169	22.37	0.173
		CP-OFDM 64QAM	1	1	20.77	0.119	20.74	0.119	20.85	0.122

ENDC

5A-n2A										
BW (MHz)	SCS (kHz)	Modulation	RB Size	RB Offset	Conducted Output Power					
					370500 (1 852.5 MHz)		376000 (1 880.0 MHz)		381500 (1 907.5 MHz)	
					(dBm)	(W)	(dBm)	(W)	(dBm)	(W)
5	15	DFT-S-OFDM BPSK	1	1	23.19	0.208	23.26	0.212	23.28	0.213
			1	13	23.39	0.218	23.41	0.219	23.31	0.214
			1	23	23.30	0.214	23.31	0.214	23.24	0.211
		DFT-S-OFDM QPSK	1	1	23.13	0.206	23.14	0.206	23.21	0.209
			1	13	23.30	0.214	23.26	0.212	23.20	0.209
			1	23	23.23	0.210	23.24	0.211	23.09	0.204

5A-n2A										
BW (MHz)	SCS (kHz)	Modulation	RB Size	RB Offset	Conducted Output Power					
					371000 (1 855.0 MHz)		376000 (1 880.0 MHz)		381000 (1 905.0 MHz)	
					(dBm)	(W)	(dBm)	(W)	(dBm)	(W)
10	15	DFT-S-OFDM BPSK	1	1	23.31	0.214	23.27	0.212	23.43	0.220
			1	26	23.46	0.222	23.27	0.212	23.45	0.221
			1	50	23.35	0.216	23.28	0.213	23.23	0.210
		DFT-S-OFDM QPSK	1	1	23.21	0.209	23.11	0.205	23.37	0.217
			1	26	23.29	0.213	23.19	0.208	23.35	0.216
			1	50	23.30	0.214	23.20	0.209	23.15	0.207

5A-n2A										
BW (MHz)	SCS (kHz)	Modulation	RB Size	RB Offset	Conducted Output Power					
					371500 (1 857.5 MHz)		376000 (1 880.0 MHz)		380500 (1 902.5 MHz)	
					(dBm)	(W)	(dBm)	(W)	(dBm)	(W)
15	15	DFT-S-OFDM BPSK	1	1	23.45	0.221	23.37	0.217	23.48	0.223
			1	40	**23.56**	**0.227**	23.32	0.215	23.37	0.217
			1	77	23.46	0.222	23.29	0.213	23.30	0.214
		DFT-S-OFDM QPSK	1	1	23.41	0.219	23.30	0.214	23.35	0.216
			1	40	23.38	0.218	23.25	0.211	23.23	0.210
			1	77	23.36	0.217	23.23	0.210	23.24	0.211

5A-n2A										
BW (MHz)	SCS (kHz)	Modulation	RB Size	RB Offset	Conducted Output Power					
					372000 (1 860.0 MHz)		376000 (1 880.0 MHz)		380000 (1 900.0 MHz)	
					(dBm)	(W)	(dBm)	(W)	(dBm)	(W)
20	15	DFT-S-OFDM BPSK	1	1	23.41	0.219	23.42	0.220	23.47	0.222
			1	53	23.46	0.222	23.33	0.215	23.37	0.217
			1	104	23.45	0.221	23.34	0.216	23.16	0.207
		DFT-S-OFDM QPSK	1	1	23.29	0.213	23.31	0.214	23.38	0.218
			1	53	23.38	0.218	23.25	0.211	23.32	0.215
			1	104	23.34	0.216	23.27	0.212	23.08	0.203