FCC ID : BEJTLAHW3IU-N
IC : 2703H-TLAHW3IUN

Product name : Telematics
TLAHW3IU-N
(Online Connectivity Unit)

25, August, 2019

LG Electronics Inc.

What is the OCU(Online Connectivity Unit)

- The OCU stands for Online Connectivity Unit
- It's a telematics device that LGE is developing for the Volkswagen vehicles.
- It is a small box installed deep inside passenger cars, and in charge of wireless communications in GSM, WCDMA and LTE network
- It provides voice and data call functions and various online services requested by VW

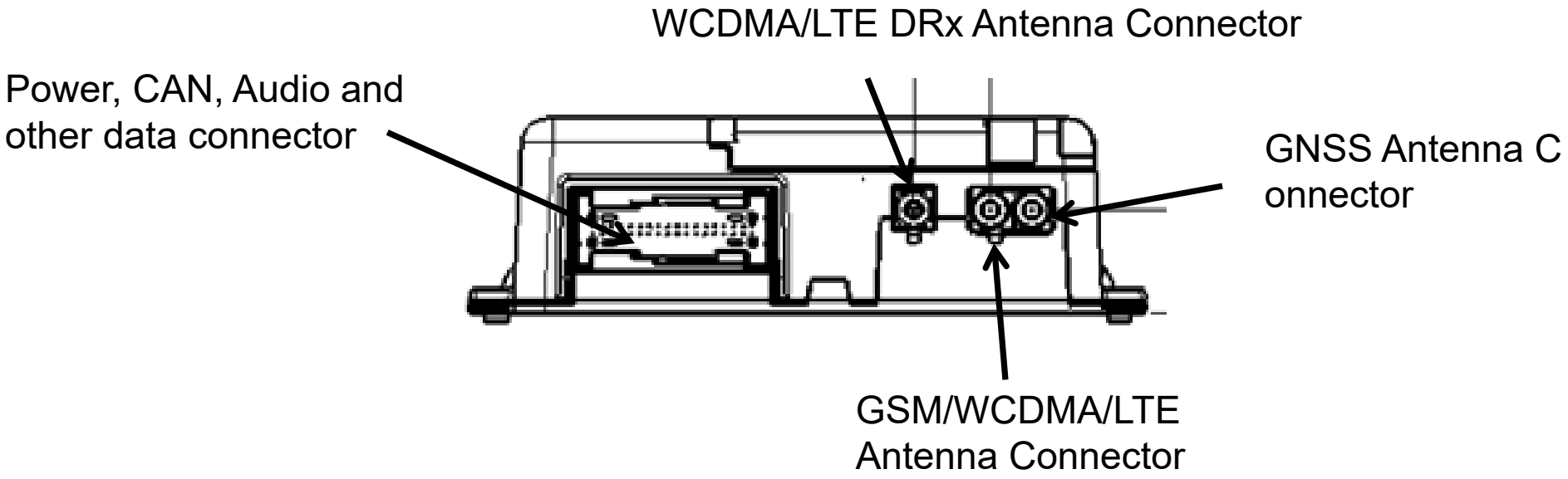

Product Image/ Function

Product Image

Telematics product supporting Emergency Call/LTE service

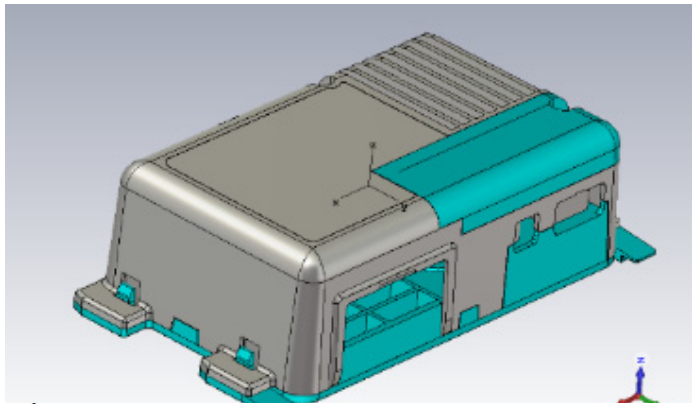

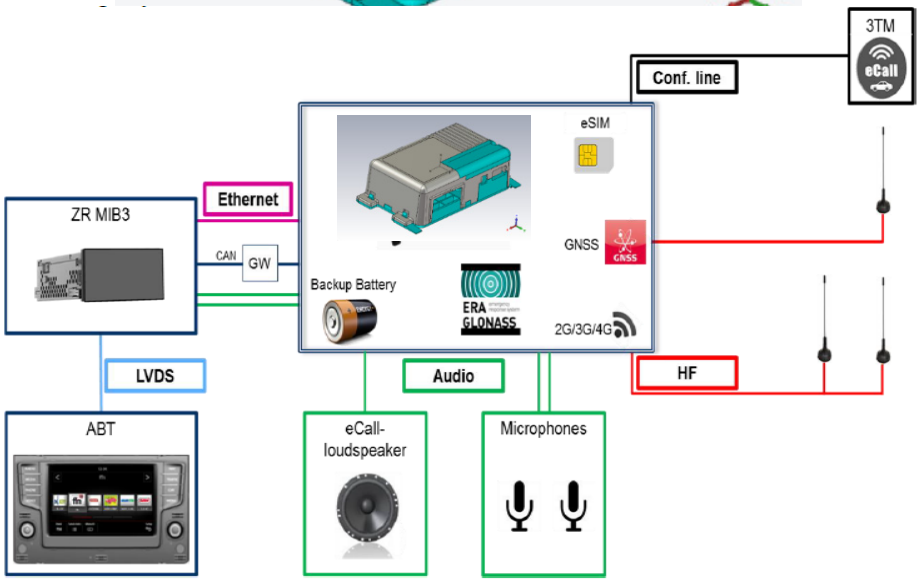

Function

- **Emergency Call**
- **Mobile Online Services**
- **Positioning/Dead Reckoning**
  -GPS/GNSS/Beidu/Galileo

Specification

Specification

Supporting Bands	GSM 850/1900 UMTS B2/B4/B5 LTE FDD B2/B4/B5/B12/B17
Modem Chip	Qualcomm MDM9240
GNSS	GPS/Glonass/Beidou
Bluetooth	No
WiFi	No
Size	130mm x 70.14mm x 37.5mm
Weight	300g
Power	DC 12V , 2A

Dimension

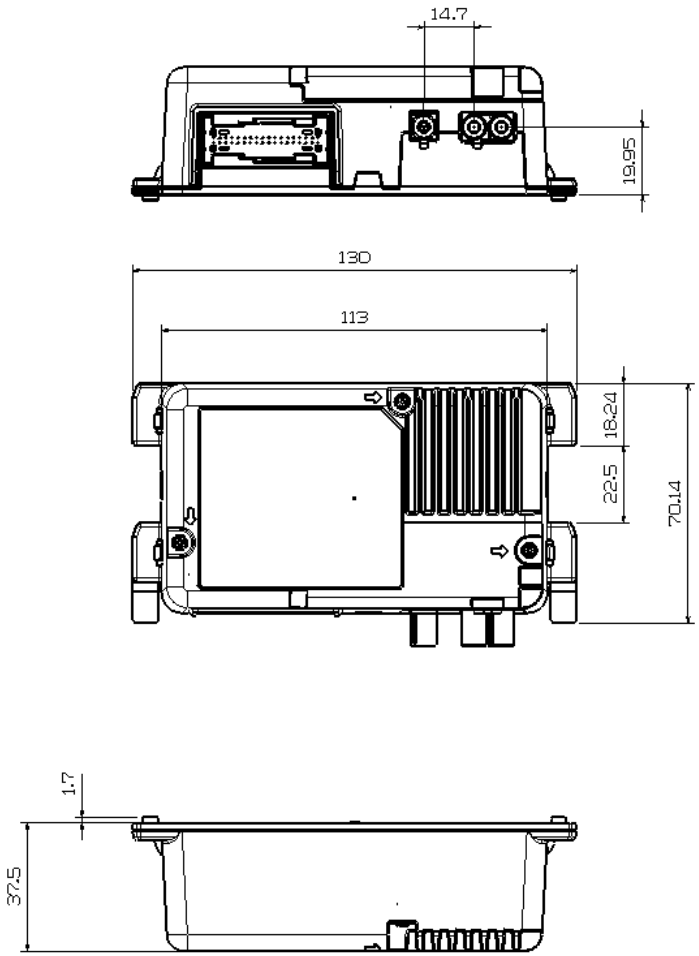

The OCU3 Features

Concept

Safety & Security Services Oriented

Telematics Terminal

Major Services

- **Call Services**
  - Emergency Call
  - Automatic Collision Notification Call
  - Information Call
  - Road Side Assistance Call
- **Remote Function Services**
  - Honking And Flashing
  - Speed Alert
  - Vehicle Disabling
  - Battery Charge Management
  - Departure Time Programming
  - Door Lock / Unlock
  - Pre-Trip Climatisation
  - Trip Statistics
  - Vehicle Status
- **Geo-Fencing**
- **POI Address Import**
- **Vehicle Health Report**
- **Vehicle Tracking**

OCU3 High Block Diagram

Confidential

Notice

FCC

Changes or modifications not expressly approved by the party responsible for compliance could void the user's authority to operate the equipment.

This device complies with part 15 of the FCC Rules. Operation is subject to the following two conditions: (1) This device may not cause harmful interference, and (2) this device must accept any interference received, including interference that may cause undesired operation.

This equipment has been tested and found to comply with the limits for a Class B digital device, pursuant to part 15 of the FCC Rules. These limits are designed to provide reasonable protection against harmful interference in a residential installation. This equipment generates uses and can radiate radio frequency energy and, if not installed and used in accordance with the instructions, may cause harmful interference to radio communications. However, there is no guarantee that interference will not occur in a particular installation. If this equipment does cause harmful interference to radio or television reception, which can be determined by turning the equipment off and on, the user is encouraged to try to correct the interference by one or more of the following measures:

-Reorient or relocate the receiving antenna.
-Increase the separation between the equipment and receiver.
-Connect the equipment into an outlet on a circuit different from that to which the receiver is connected.
-Consult the dealer or an experienced radio/TV technician for help.

This device complies with FCC radiation exposure limits set forth for an uncontrolled environment. This device should be installed and operated with minimum distance 20cm between the radiating element of this device and the user.

IC

This device complies with Industry Canada license-exempt RSS standard(s). Operation is subject to the following two conditions: (1) this device may not cause interference, and (2) this device must accept any interference, including interference that may cause undesired operation of the device.

Le présent appareil est conforme aux CNR d'Industrie Canada applicables aux appareils radio exempts de licence. L'exploitation est autorisée aux deux conditions suivantes : (1)l'appareil ne doit pas produire de brouillage, et (2) l'utilisateur de l'appareil doit accepter tout brouillage radioélectrique subi, même si le brouillage est susceptible d'en compromettre le fonctionnement.

This radio transmitter has been approved by Industry Canada to operate with the antenna types listed below with the maximum permissible gain and required antenna impedance for each antenna type indicated. Antenna types not included in this list, having a gain greater than the maximum gain indicated for that type, are strictly prohibited for use with this device. Under Industry Canada regulations, this radio transmitter may only operate using an antenna of a type and maximum (or lesser) gain approved for the transmitter by Industry Canada. To reduce potential radio interference to other users, the antenna type and its gain should be so chosen that the equivalent isotropically radiated power (e.i.r.p) is not more than that necessary for successful communication.

Le présent émetteur radio a été approuvé par Industrie Canada pour fonctionner avec les types d'antenne énumérés ci-dessous et ayant un gain admissible maximal et l'impédance requise pour chaque type d'antenne. Les types d'antenne non inclus dans cette liste, ou dont le gain est supérieur au gain maximal indiqué, sont strictement interdits pour l'exploitation de l'émetteur. Conformément à la réglementation d'Industrie Canada, le présent émetteur radio peut fonctionner avec une antenne d'un type et d'un gain maximal (ou inférieur) approuvé pour l'émetteur par Industrie Canada. Dans le but de réduire les risques de brouillage radioélectrique à l'intention des autres utilisateurs, il faut choisir le type d'antenne et son gain de sorte que la puissance isotrope rayonnée équivalente (p.i.r.e.) ne dépasse pas l'intensité nécessaire à l'établissement d'une communication satisfaisante.

This device should be installed and operated with minimum distance 20cm between the radiating element of this device and the user.
Cet appareil doit être installé et utilisé avec une distance minimale de 20 cm entre l'élément rayonnant de cet appareil et l'utilisateur.

The maximum antenna gain including cable loss must not exceed the table below;

Band	Frequency Range[MHz]	Maximum antenna gain (including cable loss)[dBi]	
		Main antenna including cable	-
B2	1850 ~ 1910	-3.87	-
B4	1710 ~ 1755	-3.74	-
B5	824 ~ 849	-3.07	-
B12(17)	699 ~ 716	-3.53	-

(Impedance: 50Ω)