SGS Korea Co., Ltd.
4, LS-ro 182beon-gil, Gunpo-si, Gyeonggi-do, Korea, 15807
Tel. +82 31 428 5700 / Fax. +82 31 427 2370
http://www.sgsgroup.kr

TEST REPORT

of

FCC Part 2 Subpart J and Part 27 Subpart C
IC RSS-192 Issue 5, RSS-198 Issue 1,
RSS-199 Issue 4 and RSS-Gen Issue 5

FCC ID: BEJTM05FNNAGM0
IC Certification: 2703H-TM05FNNAGM0

Equipment Under Test	:	Telematics Module
Model Name	:	TM05FNNAGM0
Variant Model Name(s)	:	TM05FNNAGM1
Applicant	:	FCC: LG Electronics USA IC: LG ELECTRONICS INC.
Manufacturer	:	LG Electronics Inc.
Date of Receipt	:	2024.05.08
Date of Test(s)	:	2024.05.15 ~ 2024.06.25
Date of Issue	:	2024.07.03

In the configuration tested, the EUT complied with the standards specified above. This test report does not assure KOLAS accreditation.

1) The results of this test report are effective only to the items tested.
2) The SGS Korea is not responsible for the sampling, the results of this test report apply to the sample as received.
3) This test report cannot be reproduced, except in full, without prior written permission of the Company.
4) The data marked ※ in this report was provided by the customer and may affect the validity of the test results.
We are responsible for all the information of this test report except for the data(※) provided by the customer.

Tested by: **Youngbin Kim**

Technical Manager: **Jinhyoung Cho**

SGS Korea Co., Ltd. Gunpo Laboratory

INDEX

Table of Contents Page

1. General Information ---------- 3

2. Conducted Output Power ---------- 8

3. Peak-Average Ratio ---------- 71

1. General Information

1.1. Testing Laboratory

SGS Korea Co., Ltd. (Gunpo Laboratory)
- 10-2, LS-ro 182beon-gil, Gunpo-si, Gyeonggi-do, Korea, 15807
- 4, LS-ro 182beon-gil, Gunpo-si, Gyeonggi-do, Korea, 15807
- Designation number: KR0150

All SGS services are rendered in accordance with the applicable SGS conditions of service available on request and accessible at http://www.sgs.com/en/Terms-and-Conditions.aspx.

Phone No. : +82 31 688 0901
Fax No. : +82 31 688 0921

1.2. Details of Applicant

FCC Applicant : LG Electronics USA
FCC Address : 111 Sylvan Avenue, North Building, Englewood Cliffs, New Jersey, United States, 07632
IC Applicant : LG ELECTRONICS INC.
IC Address : 222, LG-ro, Jinwi-myeon, Pyeongtaek-si, Gyeonggi-do, Korea (Republic of), 451-713
Contact Person : Kim, David
Phone No. : +1 201 470 2696

1.3. Details of Manufacturer

Company : LG Electronics Inc.
Address : 128, Yeoui-daero, Yeongdeungpo-gu, Seoul, Republic of Korea, 07336

1.4. Description of EUT

Kind of Product	Telematics Module	
Model Name	TM05FNNAGM0	
Variant Model Name	TM05FNNAGM1	
Serial Number	Conducted: 351015130056680 Radiated: 351015130065751	
Power Supply	DC 3.90 V	
Rated Power	NR Band 41, 77 ,78: 25 dBm	
Frequency Range	Port 1	Port 2
	NR Band 41(FCC): 2 496 MHz ~ 2 690 MHz NR Band 41(IC): 2 500 MHz ~ 2 690 MHz NR Band 77(FCC): 3 450 MHz ~ 3 550 MHz NR Band 77(FCC): 3 700 MHz ~ 3 980 MHz NR Band 78(FCC): 3 450 MHz ~ 3 550 MHz NR Band 78(FCC): 3 700 MHz ~ 3 800 MHz NR Band 77(IC): 3 450 MHz ~ 3 900 MHz NR Band 77(IC): 3 900 MHz ~ 3 980 MHz NR Band 78(IC): 3 450 MHz ~ 3 800 MHz	NR Band 41(FCC): 2 496 MHz ~ 2 690 MHz NR Band 41(IC): 2 500 MHz ~ 2 690 MHz NR Band 77(FCC): 3 450 MHz ~ 3 550 MHz NR Band 77(FCC): 3 700 MHz ~ 3 980 MHz NR Band 78(FCC): 3 450 MHz ~ 3 550 MHz NR Band 78(FCC): 3 700 MHz ~ 3 800 MHz NR Band 77(IC): 3 450 MHz ~ 3 900 MHz NR Band 77(IC): 3 900 MHz ~ 3 980 MHz NR Band 78(IC): 3 450 MHz ~ 3 800 MHz
Modulation Technique	BPSK, QPSK, 16QAM, 64QAM, 256QAM	
Antenna Type	Metal Antenna	
Antenna Gain※	Refer to the clause 1.12	
H/W Version	Rev.D	
S/W Version	SW175	
FVIN	SW175	

1.5. Test Equipment List

Equipment	Manufacturer	Model	S/N	Cal. Date	Cal. Interval	Cal. Due
Spectrum Analyzer	R&S	FSV30	100955	Mar. 08, 2024	Annual	Mar. 08, 2025
Signal Generator	R&S	SMA100B	106887	Oct. 06, 2023	Annual	Oct. 06, 2024
DC Power Supply	R&S	HMP2020	102133	Apr. 23, 2024	Annual	Apr. 23, 2025
Power Meter	Anritsu	ML2495A	1223004	May 29, 2024	Annual	May 29, 2025
Power Sensor	Anritsu	MA2411B	1207272	May 29, 2024	Annual	May 29, 2025
Communication Analyzer	Anritsu	MT8821C	6262094325	Mar. 05, 2024	Annual	Mar 05, 2025
Communication Analyzer	Anritsu	MT8000A	6261867312	Apr. 08, 2024	Annual	Apr. 05, 2025
Power Divider	KRYTAR	6005265	158078	May 23, 2024	Annual	May 23, 2025
Directional Coupler	KRYTAR	152613	140972	Jul. 04, 2023	Annual	Jul. 04, 2024
Spectrum Analyzer	R&S	FSW43	100637	Apr. 08, 2024	Annual	Apr. 08, 2025
Coaxial Cable	RADIALL	TESTPRO 3	182287	Apr. 12, 2024	Semi-Annual	Oct. 12, 2024
Coaxial Cable	RADIALL	TESTPRO 3	182288	Apr. 12, 2024	Semi-Annual	Oct. 12, 2024
Coaxial Cable	RADIALL	TESTPRO 3	182291	Apr. 12, 2024	Semi-Annual	Oct. 12, 2024

1.6. Summary of Test Results

The EUT has been tested according to the following specifications:

APPLIED STANDARD: FCC Part 2 and 27 IC RSS-Gen Issue 5, RSS-192 Issue 5, RSS-198 Issue 1 and RSS-199 Issue 4			
Section(s) in FCC	**Section(s) in IC**	**Test Item**	**Result**
§2.1046 §27.50(h)(2) §27.50(j)(3) §27.50(k)(3)	RSS-192 Issue 5 5.5 RSS-198 Issue 1 5.5 RSS-199 Issue 4 5.5	E.R.P. / E.I.R.P.	N/A[2)]
§27.53(l)(2) §27.53(m)(4) §27.53(n)(2)	RSS-192 Issue 5 5.6 RSS-198 Issue 1 5.6 RSS-199 Issue 4 5.6	Spurious Radiated Emission	N/A[2)]
§2.1046	RSS-Gen Issue 5 6.12	Conducted Output Power	Complied
§2.1049	RSS-Gen Issue 5 6.7	Occupied Bandwidth	N/A[2)]
§27.50(d)(5) §27.53(j)(4) §27.53(k)(4)	RSS-192 issue 5 5.5 RSS-198 issue 1 5.5 RSS-199 Issue 4 5.5	Peak-Average Ratio	Complied
§27.53(l)(2) §27.53(m)(4) §27.53(n)(2)	RSS-192 Issue 5 5.6 RSS-198 Issue 1 5.6 RSS-199 Issue 4 5.6	Spurious Emission at Antenna Terminal	N/A[2)]
§27.53(l)(2) §27.53(m)(4) §27.53(n)(2)	RSS-192 Issue 5 5.6 RSS-198 Issue 1 5.6 RSS-199 Issue 4 5.6	Band Edge	N/A[2)]
§2.1055 §27.54	RSS-Gen Issue 5 6.11 RSS-192 Issue 5 5.4 RSS-198 Issue 1 5.4 RSS-199 Issue 4 5.4	Frequency Stability	N/A[2)]

Note;

1) This product is C2PC case due to the addition of 256QAM modulation and ENDC combination for all 5G NR Bands.
2) All the bands of conducted output power with 256QAM modulation were lower than other modulation, so only Conducted output power and Peak-Average Ratio were tested.

1.7. Sample Calculation for Offset

Where relevant, the following sample calculation is provided:

1.7.1. Conducted Test

Offset value (dB) = Directional Coupler (dB) + Cable loss (dB)

1.8. ENDC Configuration

NR Band	SCS (㎑)	Bandwidth (㎒)	Waveform	Modulation	ENDC LTE Band
n41	30	20, 30, 40, 50, 60, 80, 90, 100	DFT-S OFDM, CP OFDM	BPSK, QPSK, 16QAM, 64QAM, 256QAM	26
n77	30	20, 30, 40, 50, 60, 70, 80, 90, 100			2, 5, 12, 13, 14, 66
n78	30	20, 30, 40, 50, 60, 70, 80, 90, 100			26

1.9. Manufacturer Declaration

The EUT supports two ports and LTE, WCDMA and 5G NR FDD bands support only port 1. The 5G NR TDD (n41, n77, n78) band supports both port 1 and port 2

1.10. Measurement Uncertainty

Where relevant, the following measurement uncertainty levels have been estimated for tests performed on the apparatus:

Parameter	Uncertainty
Conducted Output Power	0.33 dB
Peak to Average Ratio	0.66 dB

All measurement uncertainty values are shown with a coverage factor of *k*=2 to indicate a 95 % level of confidence.

1.11. Test Report Revision

Revision	Report Number	Date of Issue	Description
0	F690501-RF-RTL005228	2024.07.03	Initial

1.12. Antenna Information

FCC

Band	Operating Frequency (㎒)	Antenna Peak Gain (㏈i)		
		Ant. Gain		
		Port 1	Port 2	Port 1 + port 2[1)]
NR 41	2 496 ~ 2 690	0.09	5.99	6.54
NR 77 - Low	3 450 ~ 3 550	3.24	6.29	7.91
NR 77- High	3 700 ~ 3 980	3.24	6.29	7.91
NR 78 - Low	3 450 ~ 3 550	3.24	6.29	7.91
NR 78- High	3 700 ~ 3 800	3.24	6.29	7.91

IC

Band	Operating Frequency (㎒)	Antenna Peak Gain (㏈i)		
		Ant. Gain		
		Port 1	Port 2	Port 1 + Port 2
NR 41	2 496 ~ 2 690	0.09	5.99	6.54
NR 77 - Low	3 450 ~ 3 900	3.24	6.29	7.91
NR 77- High	3 900 ~ 3 980	3.24	6.29	7.91
NR 78 - Low	3 450 ~ 3 800	3.24	6.29	7.91

Remark;
- Port 1 means secondary cell and Port 2 means primary cell.

1) According to KDB 662911 D01 Multiple Transmitter Output v02r01 F)2)d)(i),
Port 1 + Port 2 Antenna Gain = $10 * \log[(10^{G_1/20} + 10^{G_2/20})^2 / N_{ANT}]$

Where,
G_1 = antenna gain of port 1,
G_2 = antenna gain of port 2,
N_{ANT} = the number of antennas

2. Conducted Output Power

2.1. Limit

CFR 47, Section FCC §2.1046 and IC RSS-Gen Issue 5 6.12.

2.2. Test Procedure

Output power shall be measured at the RF output terminals for all configurations.

1. The RF output of the transmitter was connected to the input of the mobile test unit in order to establish communication with the EUT.
2. The EUT was set up for the max. output power with pseudo random data modulation by using mobile test unit parameters.
3. The measurement performed using a wideband RF power meter.
4. This EUT was tested under all configurations and the highest power was investigated and reported.

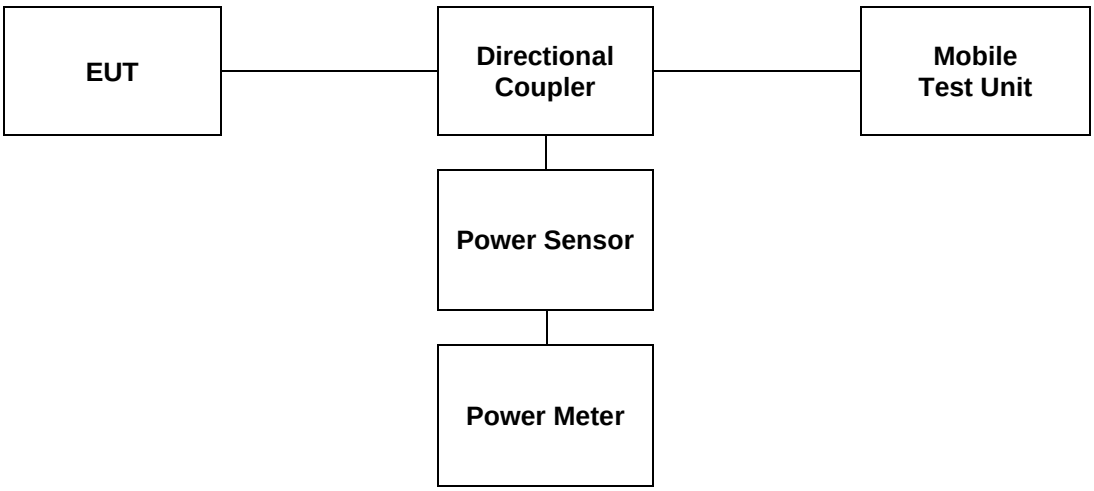

2.3. Test Result

Ambient temperature : (23 ± 1) ℃

Relative humidity : 47 % R.H.

SISO

NR Band 41 (FCC)													
SCS (㎑)	**BW (㎒)**	**Modulation**		**RB allocation**	**RB Size**	**RB Offset**	**501204 (2 506.02 ㎒)**		**518598 (2 592.99 ㎒)**		**535998 (2 679.99 ㎒)**		
							(dB m)	**(W)**	**(dB m)**	**(W)**	**(dB m)**	**(W)**	
30	20	DFT-s-OFDM	256QAM	Inner_1RB Left	1	1	**22.13**	**0.163**	21.88	0.154	21.75	0.150	
			256QAM	Inner_1RB Right	1	49	22.05	0.160	21.85	0.153	20.55	0.114	
			256QAM	Inner_Full	25	12	21.92	0.156	21.00	0.126	20.27	0.106	
			256QAM	Outer_Full	50	0	21.53	0.142	21.10	0.129	20.35	0.108	
			256QAM	Edge_1RB Left	1	0	21.45	0.140	21.39	0.138	20.28	0.107	
			256QAM	Edge_Full Left	2	0	21.78	0.151	21.47	0.140	21.30	0.135	
			256QAM	Edge_1RB Right	1	50	21.69	0.148	21.35	0.136	20.58	0.114	
			256QAM	Edge_Full Right	2	49	21.96	0.157	21.43	0.139	20.08	0.102	
		CP-OFDM	256QAM	Inner_1RB Left	1	1	20.24	0.106	19.83	0.096	19.74	0.094	
			256QAM	Inner_1RB Right	1	49	**20.27**	**0.106**	19.87	0.097	18.57	0.072	
			256QAM	Inner_Full	25	12	19.94	0.099	18.99	0.079	18.25	0.067	
			256QAM	Outer_Full	51	0	19.94	0.099	19.43	0.088	18.90	0.078	
			256QAM	Edge_1RB Left	1	0	19.97	0.099	19.87	0.097	19.80	0.095	
			256QAM	Edge_Full Left	2	0	19.76	0.095	19.94	0.099	19.86	0.097	
			256QAM	Edge_1RB Right	1	50	19.85	0.097	19.93	0.098	18.63	0.073	
			256QAM	Edge_Full Right	2	49	19.92	0.098	19.93	0.098	18.68	0.074	

NR Band 41 (FCC)													
SCS (㎑)	BW (㎒)	Modulation		RB allocation	RB Size	RB Offset	502200 (2 511.00 ㎒)		518598 (2 592.99 ㎒)		534996 (2 674.98 ㎒)	
							(dB m)	(W)	(dB m)	(W)	(dB m)	(W)
30	30	DFT-s-OFDM	256QAM	Inner_1RB Left	1	1	22.05	0.160	21.46	0.140	21.98	0.158
			256QAM	Inner_1RB Right	1	76	22.01	0.159	21.50	0.141	21.43	0.139
			256QAM	Inner_Full	36	18	22.10	0.162	21.04	0.127	20.87	0.122
			256QAM	Outer_Full	75	0	22.11	0.163	21.24	0.133	21.01	0.126
			256QAM	Edge_1RB Left	1	0	21.98	0.158	22.03	0.160	21.23	0.133
			256QAM	Edge_Full Left	2	0	22.05	0.160	22.11	0.163	**22.26**	**0.168**
			256QAM	Edge_1RB Right	1	77	21.85	0.153	21.96	0.157	21.88	0.154
			256QAM	Edge_Full Right	2	76	22.18	0.165	22.07	0.161	20.70	0.117
		CP-OFDM	256QAM	Inner_1RB Left	1	1	20.25	0.106	20.02	0.100	**20.27**	**0.106**
			256QAM	Inner_1RB Right	1	76	20.01	0.100	19.94	0.099	18.56	0.072
			256QAM	Inner_Full	39	19	20.12	0.103	18.95	0.079	18.78	0.076
			256QAM	Outer_Full	78	0	19.98	0.100	19.61	0.091	19.36	0.086
			256QAM	Edge_1RB Left	1	0	20.15	0.104	20.06	0.101	20.06	0.101
			256QAM	Edge_Full Left	2	0	20.11	0.103	20.10	0.102	20.09	0.102
			256QAM	Edge_1RB Right	1	77	20.11	0.103	20.15	0.104	18.36	0.069
			256QAM	Edge_Full Right	2	76	20.13	0.103	20.17	0.104	18.40	0.069

NR Band 41 (FCC)													
SCS (㎑)	BW (㎒)	Modulation		RB allocation	RB Size	RB Offset	503202 (2 516.01 ㎒)		518598 (2 592.99 ㎒)		534000 (2 670.00 ㎒)	
							(dB m)	(W)	(dB m)	(W)	(dB m)	(W)
30	40	DFT-s-OFDM	256QAM	Inner_1RB Left	1	1	22.13	0.163	21.53	0.142	22.12	0.163
			256QAM	Inner_1RB Right	1	104	22.01	0.159	21.47	0.140	20.02	0.100
			256QAM	Inner_Full	50	25	22.03	0.160	21.06	0.128	21.17	0.131
			256QAM	Outer_Full	100	0	22.04	0.160	21.42	0.139	21.19	0.132
			256QAM	Edge_1RB Left	1	0	**22.25**	**0.168**	21.61	0.145	22.13	0.163
			256QAM	Edge_Full Left	2	0	21.97	0.157	21.69	0.148	22.22	0.167
			256QAM	Edge_1RB Right	1	105	21.49	0.141	21.57	0.144	19.95	0.099
			256QAM	Edge_Full Right	2	104	22.05	0.160	21.64	0.146	20.08	0.102
		CP-OFDM	256QAM	Inner_1RB Left	1	1	**20.35**	**0.108**	20.02	0.100	20.35	0.108
			256QAM	Inner_1RB Right	1	104	20.31	0.107	20.05	0.101	20.33	0.108
			256QAM	Inner_Full	53	26	20.05	0.101	19.00	0.079	20.09	0.102
			256QAM	Outer_Full	106	0	20.01	0.100	19.67	0.093	19.89	0.097
			256QAM	Edge_1RB Left	1	0	20.25	0.106	20.09	0.102	20.16	0.104
			256QAM	Edge_Full Left	2	0	20.06	0.101	20.16	0.104	20.18	0.104
			256QAM	Edge_1RB Right	1	105	20.12	0.103	20.11	0.103	18.75	0.075
			256QAM	Edge_Full Right	2	104	20.09	0.102	20.19	0.104	18.68	0.074

NR Band 41 (FCC)													
SCS (㎑)	BW (㎒)	Modulation		RB allocation	RB Size	RB Offset	504204 (2 521.02 ㎒)		518598 (2 592.99 ㎒)		532998 (2 664.99 ㎒)	
							(dB m)	(W)	(dB m)	(W)	(dB m)	(W)
30	50	DFT-s-OFDM	256QAM	Inner_1RB Left	1	1	22.12	0.163	21.94	0.156	22.13	0.163
			256QAM	Inner_1RB Right	1	131	**22.15**	**0.164**	22.04	0.160	20.66	0.116
			256QAM	Inner_Full	64	32	21.92	0.156	21.93	0.156	21.92	0.156
			256QAM	Outer_Full	128	0	21.65	0.146	21.54	0.143	20.85	0.122
			256QAM	Edge_1RB Left	1	0	21.59	0.144	21.37	0.137	18.05	0.064
			256QAM	Edge_Full Left	2	0	21.58	0.144	21.41	0.138	22.07	0.161
			256QAM	Edge_1RB Right	1	132	21.49	0.141	21.44	0.139	20.97	0.125
			256QAM	Edge_Full Right	2	131	21.64	0.146	21.53	0.142	19.70	0.093
		CP-OFDM	256QAM	Inner_1RB Left	1	1	**20.35**	**0.108**	19.98	0.100	20.19	0.104
			256QAM	Inner_1RB Right	1	131	20.15	0.104	20.09	0.102	19.24	0.084
			256QAM	Inner_Full	67	33	20.04	0.101	19.97	0.099	19.87	0.097
			256QAM	Outer_Full	133	0	19.92	0.098	19.95	0.099	19.90	0.098
			256QAM	Edge_1RB Left	1	0	20.19	0.104	20.00	0.100	20.14	0.103
			256QAM	Edge_Full Left	2	0	20.21	0.105	19.98	0.100	20.19	0.104
			256QAM	Edge_1RB Right	1	132	20.01	0.100	20.09	0.102	19.23	0.084
			256QAM	Edge_Full Right	2	131	20.18	0.104	20.09	0.102	19.28	0.085

NR Band 41 (FCC)													
SCS (㎑)	BW (㎒)	Modulation		RB allocation	RB Size	RB Offset	505200 (2 526.00 ㎒)		518598 (2 592.99 ㎒)		531996 (2 659.98 ㎒)	
							(dB m)	(W)	(dB m)	(W)	(dB m)	(W)
30	60	DFT-s-OFDM	256QAM	Inner_1RB Left	1	1	**22.28**	**0.169**	21.45	0.140	21.94	0.156
			256QAM	Inner_1RB Right	1	160	21.98	0.158	21.37	0.137	20.12	0.103
			256QAM	Inner_Full	81	40	21.80	0.151	21.75	0.150	21.62	0.145
			256QAM	Outer_Full	162	0	21.80	0.151	21.73	0.149	21.64	0.146
			256QAM	Edge_1RB Left	1	0	22.15	0.164	21.90	0.155	21.93	0.156
			256QAM	Edge_Full Left	2	0	21.80	0.151	21.97	0.157	22.02	0.159
			256QAM	Edge_1RB Right	1	161	22.10	0.162	22.02	0.159	20.04	0.101
			256QAM	Edge_Full Right	2	160	21.72	0.149	22.11	0.163	20.11	0.103
		CP-OFDM	256QAM	Inner_1RB Left	1	1	20.23	0.105	19.99	0.100	19.98	0.100
			256QAM	Inner_1RB Right	1	160	20.18	0.104	20.11	0.103	18.63	0.073
			256QAM	Inner_Full	81	40	19.82	0.096	19.06	0.081	19.61	0.091
			256QAM	Outer_Full	162	0	19.95	0.099	19.85	0.097	19.82	0.096
			256QAM	Edge_1RB Left	1	0	18.45	0.070	19.92	0.098	19.95	0.099
			256QAM	Edge_Full Left	2	0	**21.68**	**0.147**	19.93	0.098	19.96	0.099
			256QAM	Edge_1RB Right	1	161	20.15	0.104	20.05	0.101	18.70	0.074
			256QAM	Edge_Full Right	2	160	19.42	0.087	20.07	0.102	18.73	0.075

NR Band 41 (FCC)													
SCS (㎑)	BW (㎒)	Modulation		RB allocation	RB Size	RB Offset	507204 (2 536.02 ㎒)		518598 (2 592.99 ㎒)		529998 (2 649.99 ㎒)		
							(dB m)	(W)	(dB m)	(W)	(dB m)	(W)	
30	80	DFT-s-OFDM	256QAM	Inner_1RB Left	1	1	21.98	0.158	21.68	0.147	21.88	0.154	
			256QAM	Inner_1RB Right	1	215	22.15	0.164	22.01	0.159	20.16	0.104	
			256QAM	Inner_Full	108	54	21.75	0.150	21.19	0.132	22.00	0.158	
			256QAM	Outer_Full	216	0	21.74	0.149	21.87	0.154	21.79	0.151	
			256QAM	Edge_1RB Left	1	0	21.99	0.158	21.94	0.156	21.86	0.153	
			256QAM	Edge_Full Left	2	0	21.87	0.154	22.02	0.159	21.92	0.156	
			256QAM	Edge_1RB Right	1	216	**22.16**	**0.164**	22.03	0.160	20.18	0.104	
			256QAM	Edge_Full Right	2	215	21.55	0.143	22.09	0.162	20.25	0.106	
		CP-OFDM	256QAM	Inner_1RB Left	1	1	20.31	0.107	20.03	0.101	20.10	0.102	
			256QAM	Inner_1RB Right	1	215	20.25	0.106	20.02	0.100	18.72	0.074	
			256QAM	Inner_Full	109	54	19.84	0.096	19.12	0.082	19.98	0.100	
			256QAM	Outer_Full	217	0	19.86	0.097	19.92	0.098	20.03	0.101	
			256QAM	Edge_1RB Left	1	0	20.18	0.104	19.97	0.099	20.02	0.100	
			256QAM	Edge_Full Left	2	0	**21.86**	**0.153**	20.02	0.100	20.04	0.101	
			256QAM	Edge_1RB Right	1	216	20.21	0.105	20.08	0.102	18.77	0.075	
			256QAM	Edge_Full Right	2	215	19.62	0.092	20.10	0.102	18.83	0.076	

NR Band 41 (FCC)													
SCS (㎑)	BW (㎒)	Modulation		RB allocation	RB Size	RB Offset	508200 (2 541.00 ㎒)		518598 (2 592.99 ㎒)		528996 (2 644.98 ㎒)		
							(dB m)	(W)	(dB m)	(W)	(dB m)	(W)	
30	90	DFT-s-OFDM	256QAM	Inner_1RB Left	1	1	**22.15**	**0.164**	20.84	0.121	20.32	0.108	
			256QAM	Inner_1RB Right	1	243	22.01	0.159	21.18	0.131	19.07	0.081	
			256QAM	Inner_Full	243	0	22.02	0.159	21.11	0.129	20.22	0.105	
			256QAM	Outer_Full	1	0	21.99	0.158	21.03	0.127	21.17	0.131	
			256QAM	Edge_1RB Left	2	0	21.35	0.136	20.83	0.121	20.32	0.108	
			256QAM	Edge_Full Left	1	244	21.57	0.144	20.92	0.124	20.42	0.110	
			256QAM	Edge_1RB Right	2	243	21.49	0.141	21.19	0.132	19.04	0.080	
			256QAM	Edge_Full Right	1	1	21.12	0.129	21.29	0.135	19.11	0.081	
		CP-OFDM	256QAM	Inner_1RB Left	1	243	**20.12**	**0.103**	19.13	0.082	18.61	0.073	
			256QAM	Inner_1RB Right	123	61	20.05	0.101	19.27	0.085	17.13	0.052	
			256QAM	Inner_Full	245	0	20.09	0.102	18.92	0.078	19.72	0.094	
			256QAM	Outer_Full	1	0	20.02	0.100	19.08	0.081	19.21	0.083	
			256QAM	Edge_1RB Left	2	0	19.46	0.088	18.90	0.078	18.37	0.069	
			256QAM	Edge_Full Left	1	244	19.86	0.097	18.92	0.078	18.41	0.069	
			256QAM	Edge_1RB Right	2	243	19.39	0.087	19.23	0.084	17.10	0.051	
			256QAM	Edge_Full Right	1	1	19.36	0.086	19.31	0.085	17.15	0.052	

NR Band 41 (FCC)													
SCS (㎑)	BW (㎒)	Modulation		RB allocation	RB Size	RB Offset	509202 (2 546.01 ㎒)		518598 (2 592.99 ㎒)		528000 (2 640.00 ㎒)		
							(dB m)	(W)	(dB m)	(W)	(dB m)	(W)	
30	100	DFT-s-OFDM	256QAM	Inner_1RB Left	1	1	22.26	0.168	21.00	0.126	20.43	0.110	
			256QAM	Inner_1RB Right	1	271	21.95	0.157	21.09	0.129	18.96	0.079	
			256QAM	Inner_Full	135	67	21.15	0.130	20.90	0.123	21.55	0.143	
			256QAM	Outer_Full	270	0	21.70	0.148	21.01	0.126	21.01	0.126	
			256QAM	Edge_1RB Left	1	0	22.05	0.160	21.01	0.126	20.45	0.111	
			256QAM	Edge_Full Left	2	0	**22.31**	**0.170**	21.07	0.128	20.51	0.112	
			256QAM	Edge_1RB Right	1	272	21.89	0.155	20.96	0.125	18.95	0.079	
			256QAM	Edge_Full Right	2	271	21.76	0.150	21.18	0.131	19.05	0.080	
		CP-OFDM	256QAM	Inner_1RB Left	1	1	20.21	0.105	19.10	0.081	18.53	0.071	
			256QAM	Inner_1RB Right	1	271	20.19	0.104	19.23	0.084	17.09	0.051	
			256QAM	Inner_Full	137	68	19.15	0.082	18.93	0.078	19.61	0.091	
			256QAM	Outer_Full	273	0	19.87	0.097	19.06	0.081	19.07	0.081	
			256QAM	Edge_1RB Left	1	0	19.66	0.092	19.02	0.080	18.44	0.070	
			256QAM	Edge_Full Left	2	0	**20.81**	**0.121**	19.08	0.081	18.51	0.071	
			256QAM	Edge_1RB Right	1	272	20.53	0.113	19.09	0.081	17.06	0.051	
			256QAM	Edge_Full Right	2	271	20.31	0.107	19.23	0.084	17.10	0.051	

NR Band 41 (IC)													
SCS (㎑)	BW (㎒)	Modulation		RB allocation	RB Size	RB Offset	502002 (2 510.01 ㎒)		519000 (2 595.00 ㎒)		535998 (2 679.99 ㎒)		
							(dB m)	(W)	(dB m)	(W)	(dB m)	(W)	
30	20	DFT-s-OFDM	256QAM	Inner_1RB Left	1	1	21.31	0.135	20.67	0.117	**21.35**	**0.136**	
			256QAM	Inner_1RB Right	1	49	20.98	0.125	20.71	0.118	20.11	0.103	
			256QAM	Inner_Full	25	12	20.68	0.117	20.58	0.114	20.06	0.101	
			256QAM	Outer_Full	50	0	20.66	0.116	20.54	0.113	20.02	0.100	
			256QAM	Edge_1RB Left	1	0	20.57	0.114	20.67	0.117	20.93	0.124	
			256QAM	Edge_Full Left	2	0	20.81	0.121	20.74	0.119	21.03	0.127	
			256QAM	Edge_1RB Right	1	50	20.80	0.120	20.70	0.117	19.74	0.094	
			256QAM	Edge_Full Right	2	49	20.69	0.117	20.75	0.119	19.84	0.096	
		CP-OFDM	256QAM	Inner_1RB Left	1	1	19.23	0.084	18.72	0.074	18.89	0.077	
			256QAM	Inner_1RB Right	1	49	19.11	0.081	18.77	0.075	18.82	0.076	
			256QAM	Inner_Full	25	12	**19.52**	**0.090**	18.63	0.073	18.10	0.065	
			256QAM	Outer_Full	51	0	19.01	0.080	18.58	0.072	18.05	0.064	
			256QAM	Edge_1RB Left	1	0	18.98	0.079	18.67	0.074	19.40	0.087	
			256QAM	Edge_Full Left	2	0	18.88	0.077	18.73	0.075	19.45	0.088	
			256QAM	Edge_1RB Right	1	50	19.01	0.080	18.78	0.076	18.33	0.068	
			256QAM	Edge_Full Right	2	49	19.13	0.082	18.78	0.076	18.42	0.070	

NR Band 41 (IC)													
SCS (㎑)	BW (㎒)	Modulation		RB allocation	RB Size	RB Offset	503004 (2 515.02 ㎒)		519000 (2 595.00 ㎒)		534996 (2 674.98 ㎒)		
							(dB m)	(W)	(dB m)	(W)	(dB m)	(W)	
30	30	DFT-s-OFDM	256QAM	Inner_1RB Left	1	1	21.45	0.140	20.91	0.123	21.44	0.139	
			256QAM	Inner_1RB Right	1	76	21.23	0.133	20.74	0.119	19.71	0.094	
			256QAM	Inner_Full	36	18	**21.81**	**0.152**	20.50	0.112	20.52	0.113	
			256QAM	Outer_Full	75	0	21.81	0.152	20.48	0.112	20.40	0.110	
			256QAM	Edge_1RB Left	1	0	21.40	0.138	20.91	0.123	20.95	0.124	
			256QAM	Edge_Full Left	2	0	21.53	0.142	20.97	0.125	21.74	0.149	
			256QAM	Edge_1RB Right	1	77	21.47	0.140	20.71	0.118	20.84	0.121	
			256QAM	Edge_Full Right	2	76	21.56	0.143	20.80	0.120	20.01	0.100	
		CP-OFDM	256QAM	Inner_1RB Left	1	1	19.47	0.089	18.87	0.077	19.74	0.094	
			256QAM	Inner_1RB Right	1	76	19.01	0.080	18.78	0.076	18.00	0.063	
			256QAM	Inner_Full	39	19	**19.80**	**0.095**	18.45	0.070	18.50	0.071	
			256QAM	Outer_Full	78	0	18.76	0.075	18.42	0.070	18.40	0.069	
			256QAM	Edge_1RB Left	1	0	18.95	0.079	18.80	0.076	19.69	0.093	
			256QAM	Edge_Full Left	2	0	19.44	0.088	18.87	0.077	19.73	0.094	
			256QAM	Edge_1RB Right	1	77	18.85	0.077	18.73	0.075	17.98	0.063	
			256QAM	Edge_Full Right	2	76	19.51	0.089	18.76	0.075	18.01	0.063	

NR Band 41 (IC)													
SCS (㎑)	BW (㎒)	Modulation		RB allocation	RB Size	RB Offset	504000 (2 520.00 ㎒)		519000 (2 595.00 ㎒)		534000 (2 670.00 ㎒)	
							(dB m)	(W)	(dB m)	(W)	(dB m)	(W)
30	40	DFT-s-OFDM	256QAM	Inner_1RB Left	1	1	21.31	0.135	20.83	0.121	21.41	0.138
			256QAM	Inner_1RB Right	1	104	21.19	0.132	20.64	0.116	19.46	0.088
			256QAM	Inner_Full	50	25	**21.89**	**0.155**	20.48	0.112	20.67	0.117
			256QAM	Outer_Full	100	0	21.76	0.150	20.44	0.111	20.50	0.112
			256QAM	Edge_1RB Left	1	0	21.31	0.135	20.82	0.121	21.46	0.140
			256QAM	Edge_Full Left	2	0	21.41	0.138	20.92	0.124	21.55	0.143
			256QAM	Edge_1RB Right	1	105	21.23	0.133	20.61	0.115	19.43	0.088
			256QAM	Edge_Full Right	2	104	21.28	0.134	20.70	0.117	19.52	0.090
		CP-OFDM	256QAM	Inner_1RB Left	1	1	19.27	0.085	18.77	0.075	19.48	0.089
			256QAM	Inner_1RB Right	1	104	19.18	0.083	18.69	0.074	17.77	0.060
			256QAM	Inner_Full	53	26	**19.84**	**0.096**	18.42	0.070	18.66	0.073
			256QAM	Outer_Full	106	0	19.69	0.093	18.37	0.069	18.47	0.070
			256QAM	Edge_1RB Left	1	0	19.25	0.084	18.73	0.075	19.48	0.089
			256QAM	Edge_Full Left	2	0	19.31	0.085	18.78	0.076	19.51	0.089
			256QAM	Edge_1RB Right	1	105	19.15	0.082	18.68	0.074	17.75	0.060
			256QAM	Edge_Full Right	2	104	19.22	0.084	18.73	0.075	17.83	0.061

NR Band 41 (IC)													
SCS (㎑)	BW (㎒)	Modulation		RB allocation	RB Size	RB Offset	505002 (2 525.01 ㎒)		519000 (2 595.00 ㎒)		532998 (2 664.99 ㎒)	
							(dBm)	(W)	(dBm)	(W)	(dBm)	(W)
30	50	DFT-s-OFDM	256QAM	Inner_1RB Left	1	1	21.36	0.137	20.98	0.125	21.69	0.148
			256QAM	Inner_1RB Right	1	131	21.16	0.131	20.97	0.125	19.79	0.095
			256QAM	Inner_Full	64	32	21.57	0.144	20.78	0.120	21.62	0.145
			256QAM	Outer_Full	128	0	21.55	0.143	20.65	0.116	20.98	0.125
			256QAM	Edge_1RB Left	1	0	20.85	0.122	20.67	0.117	21.62	0.145
			256QAM	Edge_Full Left	2	0	21.43	0.139	20.72	0.118	**21.70**	**0.148**
			256QAM	Edge_1RB Right	1	132	20.95	0.124	20.86	0.122	19.28	0.085
			256QAM	Edge_Full Right	2	131	21.33	0.136	20.96	0.125	19.37	0.086
		CP-OFDM	256QAM	Inner_1RB Left	1	1	18.32	0.068	19.09	0.081	**19.79**	**0.095**
			256QAM	Inner_1RB Right	1	131	19.23	0.084	19.01	0.080	17.93	0.062
			256QAM	Inner_Full	67	33	19.46	0.088	18.83	0.076	19.70	0.093
			256QAM	Outer_Full	133	0	19.41	0.087	18.89	0.077	19.44	0.088
			256QAM	Edge_1RB Left	1	0	19.22	0.084	19.02	0.080	19.75	0.094
			256QAM	Edge_Full Left	2	0	19.28	0.085	19.07	0.081	19.78	0.095
			256QAM	Edge_1RB Right	1	132	19.12	0.082	19.02	0.080	17.94	0.062
			256QAM	Edge_Full Right	2	131	19.15	0.082	19.01	0.080	17.98	0.063

NR Band 41 (IC)													
SCS (㎑)	BW (㎒)	Modulation		RB allocation	RB Size	RB Offset	506004 (2 530.02 ㎒)		519000 (2 595.00 ㎒)		531996 (2 659.98 ㎒)	
							(dB m)	(W)	(dB m)	(W)	(dB m)	(W)
30	60	DFT-s-OFDM	256QAM	Inner_1RB Left	1	1	21.75	0.150	21.61	0.145	20.40	0.110
			256QAM	Inner_1RB Right	1	160	22.15	0.164	21.93	0.156	21.23	0.133
			256QAM	Inner_Full	81	40	22.07	0.161	20.99	0.126	21.57	0.144
			256QAM	Outer_Full	162	0	22.30	0.170	21.50	0.141	21.68	0.147
			256QAM	Edge_1RB Left	1	0	22.16	0.164	21.72	0.149	21.91	0.155
			256QAM	Edge_Full Left	2	0	**22.72**	**0.187**	21.81	0.152	21.98	0.158
			256QAM	Edge_1RB Right	1	161	22.23	0.167	22.02	0.159	20.00	0.100
			256QAM	Edge_Full Right	2	160	22.35	0.172	22.12	0.163	20.12	0.103
		CP-OFDM	256QAM	Inner_1RB Left	1	1	20.03	0.101	19.83	0.096	20.00	0.100
			256QAM	Inner_1RB Right	1	160	19.72	0.094	20.09	0.102	18.63	0.073
			256QAM	Inner_Full	81	40	19.83	0.096	18.92	0.078	19.58	0.091
			256QAM	Outer_Full	162	0	19.88	0.097	19.70	0.093	19.76	0.095
			256QAM	Edge_1RB Left	1	0	**20.52**	**0.113**	19.78	0.095	19.93	0.098
			256QAM	Edge_Full Left	2	0	20.39	0.109	19.77	0.095	19.94	0.099
			256QAM	Edge_1RB Right	1	161	20.19	0.104	20.05	0.101	17.96	0.063
			256QAM	Edge_Full Right	2	160	20.88	0.122	20.10	0.102	18.05	0.064

NR Band 41 (IC)													
SCS (㎑)	BW (㎒)	Modulation		RB allocation	RB Size	RB Offset	508002 (2 540.01 ㎒)		519000 (2 595.00 ㎒)		529998 (2 649.99 ㎒)		
							(dB m)	(W)	(dB m)	(W)	(dB m)	(W)	
30	80	DFT-s-OFDM	256QAM	Inner_1RB Left	1	1	21.85	0.153	20.91	0.123	20.79	0.120	
			256QAM	Inner_1RB Right	1	215	21.79	0.151	21.21	0.132	19.11	0.081	
			256QAM	Inner_Full	108	54	21.75	0.150	20.62	0.115	21.45	0.140	
			256QAM	Outer_Full	216	0	21.72	0.149	20.66	0.116	20.92	0.124	
			256QAM	Edge_1RB Left	1	0	21.32	0.136	20.93	0.124	20.77	0.119	
			256QAM	Edge_Full Left	2	0	**21.99**	**0.158**	20.97	0.125	20.85	0.122	
			256QAM	Edge_1RB Right	1	216	21.25	0.133	21.19	0.132	19.09	0.081	
			256QAM	Edge_Full Right	2	215	21.42	0.139	21.32	0.136	19.19	0.083	
		CP-OFDM	256QAM	Inner_1RB Left	1	1	19.95	0.099	18.97	0.079	18.88	0.077	
			256QAM	Inner_1RB Right	1	215	19.88	0.097	19.29	0.085	17.17	0.052	
			256QAM	Inner_Full	109	54	19.77	0.095	18.65	0.073	19.51	0.089	
			256QAM	Outer_Full	217	0	19.43	0.088	18.73	0.075	18.99	0.079	
			256QAM	Edge_1RB Left	1	0	19.35	0.086	18.91	0.078	18.81	0.076	
			256QAM	Edge_Full Left	2	0	**20.00**	**0.100**	18.97	0.079	18.87	0.077	
			256QAM	Edge_1RB Right	1	216	19.56	0.090	19.29	0.085	17.17	0.052	
			256QAM	Edge_Full Right	2	215	19.42	0.087	19.33	0.086	17.21	0.053	

NR Band 41 (IC)												
SCS (㎑)	BW (㎒)	Modulation		RB allocation	RB Size	RB Offset	509004 (2 545.02 ㎒)		519000 (2 595.00 ㎒)		528996 (2 644.98 ㎒)	
							(dBm)	(W)	(dBm)	(W)	(dBm)	(W)
30	90	DFT-s-OFDM	256QAM	Inner_1RB Left	1	1	22.05	0.160	21.31	0.135	21.06	0.128
			256QAM	Inner_1RB Right	1	243	**22.35**	**0.172**	22.14	0.164	19.57	0.091
			256QAM	Inner_Full	120	60	22.15	0.164	21.55	0.143	20.22	0.105
			256QAM	Outer_Full	243	0	21.85	0.153	21.78	0.151	21.99	0.158
			256QAM	Edge_1RB Left	1	0	21.87	0.154	21.35	0.136	21.05	0.127
			256QAM	Edge_Full Left	2	0	22.08	0.161	21.43	0.139	21.10	0.129
			256QAM	Edge_1RB Right	1	244	21.86	0.153	22.13	0.163	19.52	0.090
			256QAM	Edge_Full Right	2	243	21.29	0.135	22.19	0.166	19.60	0.091
		CP-OFDM	256QAM	Inner_1RB Left	1	1	20.53	0.113	19.96	0.099	19.88	0.097
			256QAM	Inner_1RB Right	1	243	20.36	0.109	20.20	0.105	18.60	0.072
			256QAM	Inner_Full	123	61	19.62	0.092	19.03	0.080	20.04	0.101
			256QAM	Outer_Full	245	0	19.69	0.093	19.87	0.097	20.07	0.102
			256QAM	Edge_1RB Left	1	0	19.89	0.097	19.25	0.084	18.88	0.077
			256QAM	Edge_Full Left	2	0	**21.26**	**0.134**	19.30	0.085	18.92	0.078
			256QAM	Edge_1RB Right	1	244	20.53	0.113	19.94	0.099	17.68	0.059
			256QAM	Edge_Full Right	2	243	19.27	0.085	19.97	0.099	17.74	0.059

NR Band 41 (IC)													
SCS (㎑)	BW (㎒)	Modulation		RB allocation	RB Size	RB Offset	510000 (2 550.00 ㎒)		519000 (2 595.00 ㎒)		528000 (2 640.00 ㎒)	
							(dB m)	(W)	(dB m)	(W)	(dB m)	(W)
30	100	DFT-s-OFDM	256QAM	Inner_1RB Left	1	1	22.03	0.160	21.63	0.146	21.40	0.138
			256QAM	Inner_1RB Right	1	271	21.87	0.154	21.98	0.158	20.06	0.101
			256QAM	Inner_Full	135	67	21.71	0.148	21.23	0.133	21.98	0.158
			256QAM	Outer_Full	270	0	21.30	0.135	21.87	0.154	20.10	0.102
			256QAM	Edge_1RB Left	1	0	21.95	0.157	21.85	0.153	20.80	0.120
			256QAM	Edge_Full Left	2	0	22.00	0.158	21.93	0.156	20.87	0.122
			256QAM	Edge_1RB Right	1	272	22.13	0.163	22.20	0.166	19.52	0.090
			256QAM	Edge_Full Right	2	271	21.38	0.137	**22.33**	**0.171**	19.62	0.092
		CP-OFDM	256QAM	Inner_1RB Left	1	1	19.93	0.098	20.04	0.101	19.86	0.097
			256QAM	Inner_1RB Right	1	271	19.38	0.087	20.33	0.108	18.68	0.074
			256QAM	Inner_Full	137	68	19.70	0.093	19.10	0.081	19.96	0.099
			256QAM	Outer_Full	273	0	20.37	0.109	19.92	0.098	19.93	0.098
			256QAM	Edge_1RB Left	1	0	19.92	0.098	19.80	0.095	19.75	0.094
			256QAM	Edge_Full Left	2	0	19.95	0.099	19.84	0.096	19.80	0.095
			256QAM	Edge_1RB Right	1	272	**20.54**	**0.113**	20.25	0.106	18.59	0.072
			256QAM	Edge_Full Right	2	271	19.38	0.087	20.30	0.107	18.68	0.074

SISO

Low Band (3 450 ~ 3 550 ㎒)_FCC

NR Band 77/78-Low Band												
SCS (㎑)	BW (㎒)	Modulation		RB allocation	RB Size	RB Offset	630668 (3 460.02 ㎒)		633334 (3 500.01 ㎒)		636000 (3 540.00 ㎒)	
							(dB m)	(W)	(dB m)	(W)	(dB m)	(W)
30	20	DFT-s-OFDM	256QAM	Inner_1RB Left	1	1	21.07	0.128	20.82	0.121	21.54	0.143
			256QAM	Inner_1RB Right	1	49	20.86	0.122	21.15	0.130	21.32	0.136
			256QAM	Inner_Full	25	12	20.08	0.102	20.81	0.121	21.16	0.131
			256QAM	Outer_Full	50	0	20.17	0.104	20.87	0.122	21.28	0.134
			256QAM	Edge_1RB Left	1	0	19.71	0.094	20.85	0.122	21.56	0.143
			256QAM	Edge_Full Left	2	0	19.77	0.095	20.89	0.123	**21.61**	**0.145**
			256QAM	Edge_1RB Right	1	50	19.72	0.094	21.13	0.130	21.30	0.135
			256QAM	Edge_Full Right	2	49	19.76	0.095	21.23	0.133	21.38	0.137
		CP-OFDM	256QAM	Inner_1RB Left	1	1	19.15	0.082	18.96	0.079	19.59	0.091
			256QAM	Inner_1RB Right	1	49	18.91	0.078	19.23	0.084	19.36	0.086
			256QAM	Inner_Full	25	12	18.10	0.065	18.86	0.077	19.23	0.084
			256QAM	Outer_Full	51	0	18.55	0.072	18.98	0.079	19.45	0.088
			256QAM	Edge_1RB Left	1	0	19.02	0.080	18.85	0.077	19.56	0.090
			256QAM	Edge_Full Left	2	0	19.08	0.081	18.88	0.077	**19.60**	**0.091**
			256QAM	Edge_1RB Right	1	50	18.89	0.077	19.21	0.083	19.38	0.087
			256QAM	Edge_Full Right	2	49	18.91	0.078	19.19	0.083	19.38	0.087

NR Band 77/78-Low Band													
SCS (㎑)	BW (㎒)	Modulation		RB allocation	RB Size	RB Offset	631000 (3 465.00 ㎒)		633334 (3 500.01 ㎒)		635666 (3 534.99 ㎒)	
							(dBm)	(W)	(dBm)	(W)	(dBm)	(W)
30	30	DFT-s-OFDM	256QAM	Inner_1RB Left	1	1	20.51	0.112	20.69	0.117	21.44	0.139
			256QAM	Inner_1RB Right	1	76	20.70	0.117	21.30	0.135	21.36	0.137
			256QAM	Inner_Full	36	18	20.15	0.104	20.83	0.121	21.30	0.135
			256QAM	Outer_Full	75	0	20.28	0.107	20.85	0.122	21.39	0.138
			256QAM	Edge_1RB Left	1	0	21.00	0.126	20.68	0.117	21.42	0.139
			256QAM	Edge_Full Left	2	0	21.10	0.129	20.73	0.118	**21.50**	**0.141**
			256QAM	Edge_1RB Right	1	77	20.72	0.118	21.26	0.134	21.37	0.137
			256QAM	Edge_Full Right	2	76	20.77	0.119	21.38	0.137	21.41	0.138
		CP-OFDM	256QAM	Inner_1RB Left	1	1	19.12	0.082	18.77	0.075	**19.57**	**0.091**
			256QAM	Inner_1RB Right	1	76	18.71	0.074	19.31	0.085	19.41	0.087
			256QAM	Inner_Full	39	19	18.19	0.066	18.92	0.078	19.29	0.085
			256QAM	Outer_Full	78	0	18.70	0.074	18.96	0.079	19.49	0.089
			256QAM	Edge_1RB Left	1	0	19.06	0.081	18.69	0.074	19.47	0.089
			256QAM	Edge_Full Left	2	0	19.11	0.081	18.75	0.075	19.48	0.089
			256QAM	Edge_1RB Right	1	77	18.77	0.075	19.35	0.086	19.45	0.088
			256QAM	Edge_Full Right	2	76	18.73	0.075	19.31	0.085	19.39	0.087

NR Band 77/78-Low Band													
SCS (㎑)	BW (㎒)	Modulation		RB allocation	RB Size	RB Offset	631334 (3 470.01 ㎒)		633334 (3 500.01 ㎒)		635332 (3 529.98 ㎒)	
							(dB m)	(W)	(dB m)	(W)	(dB m)	(W)
30	40	DFT-s-OFDM	256QAM	Inner_1RB Left	1	1	20.59	0.115	20.72	0.118	21.24	0.133
			256QAM	Inner_1RB Right	1	104	20.86	0.122	21.47	0.140	21.45	0.140
			256QAM	Inner_Full	50	25	20.29	0.107	20.89	0.123	21.15	0.130
			256QAM	Outer_Full	100	0	20.51	0.112	20.94	0.124	21.16	0.131
			256QAM	Edge_1RB Left	1	0	20.57	0.114	20.77	0.119	21.21	0.132
			256QAM	Edge_Full Left	2	0	20.63	0.116	20.84	0.121	21.30	0.135
			256QAM	Edge_1RB Right	1	105	20.90	0.123	21.51	0.142	21.42	0.139
			256QAM	Edge_Full Right	2	104	20.97	0.125	**21.56**	**0.143**	21.50	0.141
		CP-OFDM	256QAM	Inner_1RB Left	1	1	19.26	0.084	18.82	0.076	19.26	0.084
			256QAM	Inner_1RB Right	1	104	18.99	0.079	19.57	0.091	19.50	0.089
			256QAM	Inner_Full	53	26	18.33	0.068	18.93	0.078	19.20	0.083
			256QAM	Outer_Full	106	0	18.74	0.075	19.03	0.080	19.43	0.088
			256QAM	Edge_1RB Left	1	0	19.10	0.081	18.78	0.076	19.26	0.084
			256QAM	Edge_Full Left	2	0	19.18	0.083	18.81	0.076	19.26	0.084
			256QAM	Edge_1RB Right	1	105	18.96	0.079	19.57	0.091	19.54	0.090
			256QAM	Edge_Full Right	2	104	19.01	0.080	19.58	0.091	**19.55**	**0.090**

NR Band 77/78-Low Band													
SCS (㎑)	BW (㎒)	Modulation		RB allocation	RB Size	RB Offset	631668 (3 475.02 ㎒)		633334 (3 500.01 ㎒)		635000 (3 525.00 ㎒)	
							(dB m)	(W)	(dB m)	(W)	(dB m)	(W)
30	50	DFT-s-OFDM	256QAM	Inner_1RB Left	1	1	20.63	0.116	20.66	0.116	20.82	0.121
			256QAM	Inner_1RB Right	1	131	20.85	0.122	21.39	0.138	21.30	0.135
			256QAM	Inner_Full	64	32	20.26	0.106	20.78	0.120	20.96	0.125
			256QAM	Outer_Full	128	0	20.46	0.111	20.88	0.122	21.10	0.129
			256QAM	Edge_1RB Left	1	0	20.59	0.115	20.69	0.117	20.79	0.120
			256QAM	Edge_Full Left	2	0	20.69	0.117	20.73	0.118	20.86	0.122
			256QAM	Edge_1RB Right	1	132	20.81	0.121	21.39	0.138	21.31	0.135
			256QAM	Edge_Full Right	2	131	20.92	0.124	**21.47**	**0.140**	21.37	0.137
		CP-OFDM	256QAM	Inner_1RB Left	1	1	19.21	0.083	18.74	0.075	18.88	0.077
			256QAM	Inner_1RB Right	1	131	18.90	0.078	19.44	0.088	19.35	0.086
			256QAM	Inner_Full	67	33	18.31	0.068	18.91	0.078	19.07	0.081
			256QAM	Outer_Full	133	0	18.74	0.075	18.98	0.079	19.27	0.085
			256QAM	Edge_1RB Left	1	0	19.19	0.083	18.71	0.074	18.84	0.077
			256QAM	Edge_Full Left	2	0	19.21	0.083	18.73	0.075	18.85	0.077
			256QAM	Edge_1RB Right	1	132	18.91	0.078	19.44	0.088	19.29	0.085
			256QAM	Edge_Full Right	2	131	18.88	0.077	**19.45**	**0.088**	19.31	0.085

NR Band 77/78-Low Band													
SCS (㎑)	BW (㎒)	Modulation		RB allocation	RB Size	RB Offset	632000 (3 480.00 ㎒)		633334 (3 500.01 ㎒)		634666 (3 519.99 ㎒)	
							(dB m)	(W)	(dB m)	(W)	(dB m)	(W)
30	60	DFT-s-OFDM	256QAM	Inner_1RB Left	1	1	20.73	0.118	20.70	0.117	20.71	0.118
			256QAM	Inner_1RB Right	1	160	21.14	0.130	21.41	0.138	21.31	0.135
			256QAM	Inner_Full	81	40	20.46	0.111	20.87	0.122	21.20	0.132
			256QAM	Outer_Full	162	0	20.64	0.116	20.98	0.125	21.23	0.133
			256QAM	Edge_1RB Left	1	0	20.72	0.118	20.70	0.117	20.71	0.118
			256QAM	Edge_Full Left	2	0	20.80	0.120	20.82	0.121	20.78	0.120
			256QAM	Edge_1RB Right	1	161	21.14	0.130	21.47	0.140	21.31	0.135
			256QAM	Edge_Full Right	2	160	21.20	0.132	**21.50**	**0.141**	21.39	0.138
		CP-OFDM	256QAM	Inner_1RB Left	1	1	19.31	0.085	18.82	0.076	18.80	0.076
			256QAM	Inner_1RB Right	1	160	19.20	0.083	**19.55**	**0.090**	19.40	0.087
			256QAM	Inner_Full	81	40	18.46	0.070	18.89	0.077	19.23	0.084
			256QAM	Outer_Full	162	0	18.90	0.078	19.08	0.081	19.28	0.085
			256QAM	Edge_1RB Left	1	0	19.27	0.085	18.82	0.076	18.74	0.075
			256QAM	Edge_Full Left	2	0	19.28	0.085	18.82	0.076	18.77	0.075
			256QAM	Edge_1RB Right	1	161	19.20	0.083	19.54	0.090	19.36	0.086
			256QAM	Edge_Full Right	2	160	19.22	0.084	19.52	0.090	19.36	0.086

NR Band 77/78-Low Band													
SCS (㎑)	BW (㎒)	Modulation		RB allocation	RB Size	RB Offset	632334 (3 485.01 ㎒)		633334 (3 500.01 ㎒)		634332 (3 514.98 ㎒)	
							(dB m)	(W)	(dB m)	(W)	(dB m)	(W)
30	70	DFT-s-OFDM	256QAM	Inner_1RB Left	1	1	20.68	0.117	20.64	0.116	20.76	0.119
			256QAM	Inner_1RB Right	1	187	21.34	0.136	21.45	0.140	21.25	0.133
			256QAM	Inner_Full	90	45	20.39	0.109	20.77	0.119	21.06	0.128
			256QAM	Outer_Full	180	0	20.67	0.117	20.94	0.124	21.15	0.130
			256QAM	Edge_1RB Left	1	0	20.66	0.116	20.62	0.115	20.72	0.118
			256QAM	Edge_Full Left	2	0	20.75	0.119	20.70	0.117	20.79	0.120
			256QAM	Edge_1RB Right	1	188	21.34	0.136	21.41	0.138	21.20	0.132
			256QAM	Edge_Full Right	2	187	21.41	0.138	**21.48**	**0.141**	21.25	0.133
		CP-OFDM	256QAM	Inner_1RB Left	1	1	19.25	0.084	18.97	0.079	18.84	0.077
			256QAM	Inner_1RB Right	1	187	19.40	0.087	**19.47**	**0.089**	19.29	0.085
			256QAM	Inner_Full	95	47	18.52	0.071	18.85	0.077	19.14	0.082
			256QAM	Outer_Full	189	0	18.90	0.078	19.05	0.080	19.28	0.085
			256QAM	Edge_1RB Left	1	0	19.22	0.084	18.93	0.078	18.78	0.076
			256QAM	Edge_Full Left	2	0	19.26	0.084	18.93	0.078	18.79	0.076
			256QAM	Edge_1RB Right	1	188	19.38	0.087	19.47	0.089	19.28	0.085
			256QAM	Edge_Full Right	2	187	19.39	0.087	19.47	0.089	19.29	0.085

NR Band 77/78-Low Band													
SCS (㎑)	BW (㎒)	Modulation		RB allocation	RB Size	RB Offset	632668 (3 490.02 ㎒)		633334 (3 500.01 ㎒)		634000 (3 510.00 ㎒)	
							(dB m)	(W)	(dB m)	(W)	(dB m)	(W)
30	80	DFT-s-OFDM	256QAM	Inner_1RB Left	1	1	20.71	0.118	20.72	0.118	20.72	0.118
			256QAM	Inner_1RB Right	1	215	21.40	0.138	21.28	0.134	21.28	0.134
			256QAM	Inner_Full	108	54	20.64	0.116	21.03	0.127	21.03	0.127
			256QAM	Outer_Full	216	0	20.94	0.124	21.10	0.129	21.10	0.129
			256QAM	Edge_1RB Left	1	0	20.66	0.116	20.65	0.116	20.65	0.116
			256QAM	Edge_Full Left	2	0	20.76	0.119	20.74	0.119	20.74	0.119
			256QAM	Edge_1RB Right	1	216	21.40	0.138	21.24	0.133	21.24	0.133
			256QAM	Edge_Full Right	2	215	**21.49**	**0.141**	21.31	0.135	21.31	0.135
		CP-OFDM	256QAM	Inner_1RB Left	1	1	19.38	0.087	18.89	0.077	18.89	0.077
			256QAM	Inner_1RB Right	1	215	19.43	0.088	19.27	0.085	19.27	0.085
			256QAM	Inner_Full	109	54	18.68	0.074	19.11	0.081	19.11	0.081
			256QAM	Outer_Full	217	0	19.04	0.080	19.17	0.083	19.17	0.083
			256QAM	Edge_1RB Left	1	0	19.24	0.084	18.85	0.077	18.85	0.077
			256QAM	Edge_Full Left	2	0	19.28	0.085	18.84	0.077	18.84	0.077
			256QAM	Edge_1RB Right	1	216	**19.45**	**0.088**	19.30	0.085	19.30	0.085
			256QAM	Edge_Full Right	2	215	19.44	0.088	19.32	0.086	19.32	0.086

NR Band 77/78-Low Band													
SCS (㎑)	BW (㎒)	Modulation		RB allocation	RB Size	RB Offset	633000 (3 495.00 ㎒)		633334 (3 500.01 ㎒)		633666 (3 504.99 ㎒)	
							(dB m)	(W)	(dB m)	(W)	(dB m)	(W)
30	90	DFT-s-OFDM	256QAM	Inner_1RB Left	1	1	20.21	0.105	20.19	0.104	20.18	0.104
			256QAM	Inner_1RB Right	1	243	21.24	0.133	21.27	0.134	21.12	0.129
			256QAM	Inner_Full	120	60	21.05	0.127	21.07	0.128	21.09	0.129
			256QAM	Outer_Full	243	0	20.89	0.123	21.11	0.129	21.10	0.129
			256QAM	Edge_1RB Left	1	0	20.14	0.103	20.16	0.104	20.15	0.104
			256QAM	Edge_Full Left	2	0	20.22	0.105	20.25	0.106	20.21	0.105
			256QAM	Edge_1RB Right	1	244	21.14	0.130	21.22	0.132	21.09	0.129
			256QAM	Edge_Full Right	2	243	21.22	0.132	**21.29**	**0.135**	21.16	0.131
		CP-OFDM	256QAM	Inner_1RB Left	1	1	19.34	0.086	19.25	0.084	19.22	0.084
			256QAM	Inner_1RB Right	1	243	**19.57**	**0.091**	19.47	0.089	19.32	0.086
			256QAM	Inner_Full	123	61	18.72	0.074	18.92	0.078	19.06	0.081
			256QAM	Outer_Full	245	0	19.06	0.081	19.16	0.082	19.20	0.083
			256QAM	Edge_1RB Left	1	0	18.19	0.066	18.25	0.067	18.19	0.066
			256QAM	Edge_Full Left	2	0	18.23	0.067	18.27	0.067	18.23	0.067
			256QAM	Edge_1RB Right	1	244	19.20	0.083	19.27	0.085	19.12	0.082
			256QAM	Edge_Full Right	2	243	19.23	0.084	19.32	0.086	19.15	0.082

NR Band 77/78-Low Band												
SCS (㎑)	BW (㎒)	Modulation		RB allocation	RB Size	RB Offset	-		633334 (3 500.01 ㎒)		-	
							(dB m)	(W)	(dB m)	(W)	(dB m)	(W)
30	100	DFT-s-OFDM	256QAM	Inner_1RB Left	1	1	-	-	20.83	0.121	-	-
			256QAM	Inner_1RB Right	1	271	-	-	21.37	0.137	-	-
			256QAM	Inner_Full	135	67	-	-	20.91	0.123	-	-
			256QAM	Outer_Full	270	0	-	-	21.10	0.129	-	-
			256QAM	Edge_1RB Left	1	0	-	-	20.86	0.122	-	-
			256QAM	Edge_Full Left	2	0	-	-	20.93	0.124	-	-
			256QAM	Edge_1RB Right	1	272	-	-	21.33	0.136	-	-
			256QAM	Edge_Full Right	2	271	-	-	**21.42**	**0.139**	-	-
		CP-OFDM	256QAM	Inner_1RB Left	1	1	-	-	19.43	0.088	-	-
			256QAM	Inner_1RB Right	1	271	-	-	**19.48**	**0.089**	-	-
			256QAM	Inner_Full	137	68	-	-	18.97	0.079	-	-
			256QAM	Outer_Full	273	0	-	-	19.18	0.083	-	-
			256QAM	Edge_1RB Left	1	0	-	-	19.24	0.084	-	-
			256QAM	Edge_Full Left	2	0	-	-	19.30	0.085	-	-
			256QAM	Edge_1RB Right	1	272	-	-	19.41	0.087	-	-
			256QAM	Edge_Full Right	2	271	-	-	19.45	0.088	-	-

High Band (3 700 ~ 3 980 ㎒)_FCC

NR Band 77/78-High Band												
SCS (㎑)	BW (㎒)	Modulation		RB allocation	RB Size	RB Offset	647334 (3 710.01 ㎒)		656000 (3 840.00 ㎒)		664666 (3 969.99 ㎒)	
							(dB m)	(W)	(dB m)	(W)	(dB m)	(W)
30	20	DFT-s-OFDM	256QAM	Inner_1RB Left	1	1	21.07	0.128	20.42	0.110	20.62	0.115
			256QAM	Inner_1RB Right	1	49	21.07	0.128	20.65	0.116	20.61	0.115
			256QAM	Inner_Full	25	12	21.06	0.128	19.48	0.089	19.59	0.091
			256QAM	Outer_Full	50	0	21.08	0.128	19.65	0.092	19.76	0.095
			256QAM	Edge_1RB Left	1	0	21.09	0.129	20.00	0.100	20.00	0.100
			256QAM	Edge_Full Left	2	0	21.14	0.130	20.07	0.102	20.10	0.102
			256QAM	Edge_1RB Right	1	50	21.09	0.129	20.13	0.103	20.03	0.101
			256QAM	Edge_Full Right	2	49	**21.14**	**0.130**	20.17	0.104	20.08	0.102
		CP-OFDM	256QAM	Inner_1RB Left	1	1	**19.16**	**0.082**	18.49	0.071	18.54	0.071
			256QAM	Inner_1RB Right	1	49	19.06	0.081	18.60	0.072	18.53	0.071
			256QAM	Inner_Full	25	12	19.04	0.080	17.45	0.056	17.57	0.057
			256QAM	Outer_Full	51	0	19.10	0.081	18.00	0.063	17.96	0.063
			256QAM	Edge_1RB Left	1	0	19.09	0.081	18.44	0.070	18.48	0.070
			256QAM	Edge_Full Left	2	0	19.14	0.082	18.48	0.070	18.55	0.072
			256QAM	Edge_1RB Right	1	50	19.13	0.082	18.64	0.073	18.52	0.071
			256QAM	Edge_Full Right	2	49	19.12	0.082	18.64	0.073	18.58	0.072

NR Band 77/78-High Band													
SCS (㎑)	BW (㎒)	Modulation		RB allocation	RB Size	RB Offset	647668 (3 715.02 ㎒)		656000 (3 840.00 ㎒)		664332 (3 964.98 ㎒)	
							(dB m)	(W)	(dB m)	(W)	(dB m)	(W)
30	30	DFT-s-OFDM	256QAM	Inner_1RB Left	1	1	20.87	0.122	20.14	0.103	19.77	0.095
			256QAM	Inner_1RB Right	1	76	21.09	0.129	20.26	0.106	20.04	0.101
			256QAM	Inner_Full	36	18	20.95	0.124	19.52	0.090	19.58	0.091
			256QAM	Outer_Full	75	0	21.07	0.128	19.75	0.094	19.76	0.095
			256QAM	Edge_1RB Left	1	0	20.86	0.122	20.38	0.109	20.28	0.107
			256QAM	Edge_Full Left	2	0	21.03	0.127	20.41	0.110	20.37	0.109
			256QAM	Edge_1RB Right	1	77	21.06	0.128	20.82	0.121	20.56	0.114
			256QAM	Edge_Full Right	2	76	**21.24**	**0.133**	20.89	0.123	20.65	0.116
		CP-OFDM	256QAM	Inner_1RB Left	1	1	19.05	0.080	18.43	0.070	18.27	0.067
			256QAM	Inner_1RB Right	1	76	19.12	0.082	18.79	0.076	18.51	0.071
			256QAM	Inner_Full	39	19	18.96	0.079	17.51	0.056	17.57	0.057
			256QAM	Outer_Full	78	0	18.99	0.079	18.09	0.064	18.01	0.063
			256QAM	Edge_1RB Left	1	0	18.88	0.077	18.36	0.069	18.21	0.066
			256QAM	Edge_Full Left	2	0	18.90	0.078	18.44	0.070	18.25	0.067
			256QAM	Edge_1RB Right	1	77	**19.16**	**0.082**	18.80	0.076	18.51	0.071
			256QAM	Edge_Full Right	2	76	19.10	0.081	18.80	0.076	18.52	0.071

NR Band 77/78-High Band													
SCS (㎑)	BW (㎒)	Modulation		RB allocation	RB Size	RB Offset	648000 (3 720.00 ㎒)		656000 (3 840.00 ㎒)		664000 (3 960.00 ㎒)	
							(dBm)	(W)	(dBm)	(W)	(dBm)	(W)
30	40	DFT-s-OFDM	256QAM	Inner_1RB Left	1	1	21.01	0.126	20.23	0.105	19.16	0.082
			256QAM	Inner_1RB Right	1	104	21.28	0.134	20.36	0.109	20.05	0.101
			256QAM	Inner_Full	50	25	21.03	0.127	19.55	0.090	19.49	0.089
			256QAM	Outer_Full	100	0	21.04	0.127	19.79	0.095	19.53	0.090
			256QAM	Edge_1RB Left	1	0	20.99	0.126	20.23	0.105	19.07	0.081
			256QAM	Edge_Full Left	2	0	21.16	0.131	20.27	0.106	19.18	0.083
			256QAM	Edge_1RB Right	1	105	21.24	0.133	20.36	0.109	20.00	0.100
			256QAM	Edge_Full Right	2	104	**21.33**	**0.136**	20.39	0.109	20.07	0.102
		CP-OFDM	256QAM	Inner_1RB Left	1	1	19.06	0.081	18.50	0.071	17.66	0.058
			256QAM	Inner_1RB Right	1	104	19.33	0.086	18.91	0.078	18.56	0.072
			256QAM	Inner_Full	53	26	19.02	0.080	17.55	0.057	17.48	0.056
			256QAM	Outer_Full	106	0	19.05	0.080	18.02	0.063	17.80	0.060
			256QAM	Edge_1RB Left	1	0	19.02	0.080	18.43	0.070	17.62	0.058
			256QAM	Edge_Full Left	2	0	19.05	0.080	18.45	0.070	17.68	0.059
			256QAM	Edge_1RB Right	1	105	19.33	0.086	18.89	0.077	18.53	0.071
			256QAM	Edge_Full Right	2	104	**19.37**	**0.086**	18.93	0.078	18.59	0.072

NR Band 77/78-High Band													
SCS (㎑)	BW (㎒)	Modulation		RB allocation	RB Size	RB Offset	648334 (3 725.01 ㎒)		656000 (3 840.00 ㎒)		663666 (3 954.99 ㎒)	
							(dB m)	(W)	(dB m)	(W)	(dB m)	(W)
30	50	DFT-s-OFDM	256QAM	Inner_1RB Left	1	1	20.79	0.120	20.06	0.101	19.15	0.082
			256QAM	Inner_1RB Right	1	131	21.23	0.133	20.52	0.113	20.33	0.108
			256QAM	Inner_Full	64	32	20.97	0.125	19.57	0.091	19.69	0.093
			256QAM	Outer_Full	128	0	20.99	0.126	19.97	0.099	19.70	0.093
			256QAM	Edge_1RB Left	1	0	20.78	0.120	20.05	0.101	19.09	0.081
			256QAM	Edge_Full Left	2	0	20.84	0.121	20.16	0.104	19.16	0.082
			256QAM	Edge_1RB Right	1	132	21.24	0.133	20.52	0.113	20.28	0.107
			256QAM	Edge_Full Right	2	131	**21.33**	**0.136**	20.59	0.115	20.34	0.108
		CP-OFDM	256QAM	Inner_1RB Left	1	1	18.86	0.077	18.10	0.065	17.65	0.058
			256QAM	Inner_1RB Right	1	131	**19.30**	**0.085**	19.02	0.080	18.79	0.076
			256QAM	Inner_Full	67	33	19.01	0.080	17.60	0.058	17.72	0.059
			256QAM	Outer_Full	133	0	19.00	0.079	18.27	0.067	18.16	0.065
			256QAM	Edge_1RB Left	1	0	18.79	0.076	18.07	0.064	17.63	0.058
			256QAM	Edge_Full Left	2	0	18.83	0.076	18.07	0.064	17.69	0.059
			256QAM	Edge_1RB Right	1	132	19.29	0.085	19.07	0.081	18.82	0.076
			256QAM	Edge_Full Right	2	131	19.30	0.085	19.10	0.081	18.86	0.077

NR Band 77/78-High Band												
SCS (㎑)	BW (㎒)	Modulation		RB allocation	RB Size	RB Offset	648668 (3 730.02 ㎒)		656000 (3 840.00 ㎒)		663332 (3 949.98 ㎒)	
							(dB m)	(W)	(dB m)	(W)	(dB m)	(W)
30	60	DFT-s-OFDM	256QAM	Inner_1RB Left	1	1	20.86	0.122	20.19	0.104	19.24	0.084
			256QAM	Inner_1RB Right	1	160	21.29	0.135	20.63	0.116	20.81	0.121
			256QAM	Inner_Full	81	40	21.07	0.128	19.65	0.092	19.92	0.098
			256QAM	Outer_Full	162	0	21.04	0.127	20.07	0.102	20.00	0.100
			256QAM	Edge_1RB Left	1	0	20.84	0.121	20.18	0.104	19.28	0.085
			256QAM	Edge_Full Left	2	0	20.93	0.124	20.26	0.106	19.33	0.086
			256QAM	Edge_1RB Right	1	161	21.22	0.132	20.63	0.116	20.80	0.120
			256QAM	Edge_Full Right	2	160	**21.31**	**0.135**	20.72	0.118	20.87	0.122
		CP-OFDM	256QAM	Inner_1RB Left	1	1	18.95	0.079	18.26	0.067	17.82	0.061
			256QAM	Inner_1RB Right	1	160	**19.36**	**0.086**	19.13	0.082	19.30	0.085
			256QAM	Inner_Full	81	40	19.10	0.081	17.63	0.058	17.89	0.062
			256QAM	Outer_Full	162	0	19.10	0.081	18.23	0.067	18.46	0.070
			256QAM	Edge_1RB Left	1	0	18.88	0.077	18.20	0.066	17.78	0.060
			256QAM	Edge_Full Left	2	0	18.93	0.078	18.21	0.066	17.78	0.060
			256QAM	Edge_1RB Right	1	161	19.35	0.086	19.12	0.082	19.27	0.085
			256QAM	Edge_Full Right	2	160	19.35	0.086	19.14	0.082	19.28	0.085

NR Band 77/78-High Band												
SCS (㎑)	BW (㎒)	Modulation		RB allocation	RB Size	RB Offset	649000 (3 735.00 ㎒)		656000 (3 840.00 ㎒)		663000 (3 945.00 ㎒)	
							(dB m)	(W)	(dB m)	(W)	(dB m)	(W)
30	70	DFT-s-OFDM	256QAM	Inner_1RB Left	1	1	20.81	0.121	20.25	0.106	19.24	0.084
			256QAM	Inner_1RB Right	1	187	21.31	0.135	20.61	0.115	20.95	0.124
			256QAM	Inner_Full	90	45	21.02	0.126	19.66	0.092	19.64	0.092
			256QAM	Outer_Full	180	0	21.07	0.128	20.11	0.103	19.94	0.099
			256QAM	Edge_1RB Left	1	0	20.81	0.121	20.29	0.107	19.24	0.084
			256QAM	Edge_Full Left	2	0	20.89	0.123	20.33	0.108	19.32	0.086
			256QAM	Edge_1RB Right	1	188	21.35	0.136	20.66	0.116	20.96	0.125
			256QAM	Edge_Full Right	2	187	**21.42**	**0.139**	20.72	0.118	21.01	0.126
		CP-OFDM	256QAM	Inner_1RB Left	1	1	18.87	0.077	18.35	0.068	17.78	0.060
			256QAM	Inner_1RB Right	1	187	**19.44**	**0.088**	19.13	0.082	19.37	0.086
			256QAM	Inner_Full	95	47	19.06	0.081	17.68	0.059	17.70	0.059
			256QAM	Outer_Full	189	0	19.13	0.082	18.39	0.069	18.33	0.068
			256QAM	Edge_1RB Left	1	0	18.85	0.077	18.32	0.068	17.70	0.059
			256QAM	Edge_Full Left	2	0	18.88	0.077	18.35	0.068	17.76	0.060
			256QAM	Edge_1RB Right	1	188	19.41	0.087	19.16	0.082	19.34	0.086
			256QAM	Edge_Full Right	2	187	19.39	0.087	19.15	0.082	19.35	0.086

NR Band 77/78-High Band												
SCS (㎑)	BW (㎒)	Modulation		RB allocation	RB Size	RB Offset	649334 (3 740.01 ㎒)		656000 (3 840.00 ㎒)		662666 (3 939.99 ㎒)	
							(dB m)	(W)	(dB m)	(W)	(dB m)	(W)
30	80	DFT-s-OFDM	256QAM	Inner_1RB Left	1	1	20.93	0.124	20.42	0.110	19.59	0.091
			256QAM	Inner_1RB Right	1	215	21.07	0.128	20.53	0.113	20.81	0.121
			256QAM	Inner_Full	108	54	21.02	0.126	19.68	0.093	19.50	0.089
			256QAM	Outer_Full	216	0	21.12	0.129	20.28	0.107	19.89	0.097
			256QAM	Edge_1RB Left	1	0	20.91	0.123	20.45	0.111	19.59	0.091
			256QAM	Edge_Full Left	2	0	20.98	0.125	20.51	0.112	19.68	0.093
			256QAM	Edge_1RB Right	1	216	21.05	0.127	20.58	0.114	20.84	0.121
			256QAM	Edge_Full Right	2	215	**21.15**	**0.130**	20.63	0.116	20.92	0.124
		CP-OFDM	256QAM	Inner_1RB Left	1	1	19.02	0.080	18.51	0.071	18.18	0.066
			256QAM	Inner_1RB Right	1	215	19.12	0.082	19.11	0.081	19.24	0.084
			256QAM	Inner_Full	109	54	19.02	0.080	17.73	0.059	17.53	0.057
			256QAM	Outer_Full	217	0	19.14	0.082	18.54	0.071	18.19	0.066
			256QAM	Edge_1RB Left	1	0	18.95	0.079	18.46	0.070	18.16	0.065
			256QAM	Edge_Full Left	2	0	18.97	0.079	18.50	0.071	18.17	0.066
			256QAM	Edge_1RB Right	1	216	19.14	0.082	19.05	0.080	**19.25**	**0.084**
			256QAM	Edge_Full Right	2	215	19.18	0.083	19.11	0.081	19.23	0.084

NR Band 77/78-High Band													
SCS (㎑)	BW (㎒)	Modulation		RB allocation	RB Size	RB Offset	649668 (3 745.02 ㎒)		656000 (3 840.00 ㎒)		662332 (3 934.98 ㎒)	
							(dB m)	(W)	(dB m)	(W)	(dB m)	(W)
30	90	DFT-s-OFDM	256QAM	Inner_1RB Left	1	1	20.87	0.122	20.55	0.114	19.72	0.094
			256QAM	Inner_1RB Right	1	243	20.50	0.112	19.93	0.098	20.22	0.105
			256QAM	Inner_Full	120	60	20.61	0.115	20.01	0.100	20.11	0.103
			256QAM	Outer_Full	243	0	**21.13**	**0.130**	20.29	0.107	19.92	0.098
			256QAM	Edge_1RB Left	1	0	20.88	0.122	20.54	0.113	19.74	0.094
			256QAM	Edge_Full Left	2	0	20.93	0.124	20.62	0.115	19.78	0.095
			256QAM	Edge_1RB Right	1	244	20.51	0.112	19.92	0.098	20.27	0.106
			256QAM	Edge_Full Right	2	243	20.59	0.115	20.01	0.100	20.30	0.107
		CP-OFDM	256QAM	Inner_1RB Left	1	1	18.93	0.078	18.60	0.072	18.68	0.074
			256QAM	Inner_1RB Right	1	243	**19.17**	**0.083**	18.95	0.079	19.16	0.082
			256QAM	Inner_Full	123	61	19.03	0.080	17.75	0.060	17.34	0.054
			256QAM	Outer_Full	245	0	19.14	0.082	18.56	0.072	18.29	0.067
			256QAM	Edge_1RB Left	1	0	18.92	0.078	18.58	0.072	17.75	0.060
			256QAM	Edge_Full Left	2	0	18.93	0.078	18.60	0.072	17.76	0.060
			256QAM	Edge_1RB Right	1	244	18.55	0.072	17.99	0.063	18.20	0.066
			256QAM	Edge_Full Right	2	243	18.58	0.072	18.04	0.064	18.24	0.067

NR Band 77/78-High Band													
SCS (㎑)	BW (㎒)	Modulation		RB allocation	RB Size	RB Offset	650000 (3 750.00 ㎒)		656000 (3 840.00 ㎒)		662000 (3 930.00 ㎒)	
							(dB m)	(W)	(dB m)	(W)	(dB m)	(W)
30	100	DFT-s-OFDM	256QAM	Inner_1RB Left	1	1	20.94	0.124	20.64	0.116	20.54	0.113
			256QAM	Inner_1RB Right	1	271	20.56	0.114	20.28	0.107	20.83	0.121
			256QAM	Inner_Full	135	67	21.02	0.126	19.78	0.095	19.31	0.085
			256QAM	Outer_Full	270	0	**21.09**	**0.129**	20.34	0.108	20.07	0.102
			256QAM	Edge_1RB Left	1	0	20.94	0.124	20.64	0.116	20.56	0.114
			256QAM	Edge_Full Left	2	0	20.98	0.125	20.71	0.118	20.64	0.116
			256QAM	Edge_1RB Right	1	272	20.58	0.114	20.25	0.106	20.87	0.122
			256QAM	Edge_Full Right	2	271	20.68	0.117	20.33	0.108	20.94	0.124
		CP-OFDM	256QAM	Inner_1RB Left	1	1	19.00	0.079	18.70	0.074	19.09	0.081
			256QAM	Inner_1RB Right	1	271	18.85	0.077	18.78	0.076	19.31	0.085
			256QAM	Inner_Full	137	68	19.02	0.080	17.80	0.060	17.27	0.053
			256QAM	Outer_Full	273	0	19.12	0.082	18.57	0.072	18.22	0.066
			256QAM	Edge_1RB Left	1	0	18.95	0.079	18.68	0.074	19.03	0.080
			256QAM	Edge_Full Left	2	0	18.97	0.079	18.70	0.074	19.05	0.080
			256QAM	Edge_1RB Right	1	272	18.80	0.076	18.81	0.076	19.29	0.085
			256QAM	Edge_Full Right	2	271	18.87	0.077	18.84	0.077	**19.34**	**0.086**

Low Band (3 450 ~ 3 900 ㎒)_IC

NR Band 77/78-Low Band												
SCS (㎑)	BW (㎒)	Modulation		RB allocation	RB Size	RB Offset	630668 (3 460.02 ㎒)		645000 (3 675.00 ㎒)		659332 (3 889.98 ㎒)	
							(dB m)	(W)	(dB m)	(W)	(dB m)	(W)
30	20	DFT-s-OFDM	256QAM	Inner_1RB Left	1	1	21.46	0.140	21.41	0.138	21.22	0.132
			256QAM	Inner_1RB Right	1	49	21.06	0.128	21.29	0.135	20.42	0.110
			256QAM	Inner_Full	25	12	20.44	0.111	21.21	0.132	19.86	0.097
			256QAM	Outer_Full	50	0	20.58	0.114	21.32	0.136	20.00	0.100
			256QAM	Edge_1RB Left	1	0	20.88	0.122	21.42	0.139	20.70	0.117
			256QAM	Edge_Full Left	2	0	21.25	0.133	**21.48**	**0.141**	20.77	0.119
			256QAM	Edge_1RB Right	1	50	20.91	0.123	21.26	0.134	19.88	0.097
			256QAM	Edge_Full Right	2	49	21.28	0.134	21.33	0.136	19.96	0.099
		CP-OFDM	256QAM	Inner_1RB Left	1	1	**19.50**	**0.089**	19.50	0.089	19.19	0.083
			256QAM	Inner_1RB Right	1	49	19.08	0.081	19.27	0.085	18.44	0.070
			256QAM	Inner_Full	25	12	18.47	0.070	19.22	0.084	17.83	0.061
			256QAM	Outer_Full	51	0	18.90	0.078	19.36	0.086	18.12	0.065
			256QAM	Edge_1RB Left	1	0	19.40	0.087	19.43	0.088	19.15	0.082
			256QAM	Edge_Full Left	2	0	19.48	0.089	19.47	0.089	19.15	0.082
			256QAM	Edge_1RB Right	1	50	19.14	0.082	19.32	0.086	18.38	0.069
			256QAM	Edge_Full Right	2	49	19.11	0.081	19.29	0.085	18.41	0.069

NR Band 77/78-Low Band													
SCS (㎑)	BW (㎒)	Modulation		RB allocation	RB Size	RB Offset	631000 (3 465.00 ㎒)		645000 (3 675.00 ㎒)		659000 (3 885.00 ㎒)	
							(dB m)	(W)	(dB m)	(W)	(dB m)	(W)
30	30	DFT-s-OFDM	256QAM	Inner_1RB Left	1	1	20.84	0.121	21.46	0.140	20.73	0.118
			256QAM	Inner_1RB Right	1	76	20.96	0.125	21.29	0.135	19.96	0.099
			256QAM	Inner_Full	36	18	20.43	0.110	21.23	0.133	20.04	0.101
			256QAM	Outer_Full	75	0	20.57	0.114	21.35	0.136	20.16	0.104
			256QAM	Edge_1RB Left	1	0	21.32	0.136	21.43	0.139	21.26	0.134
			256QAM	Edge_Full Left	2	0	21.39	0.138	**21.49**	**0.141**	21.34	0.136
			256QAM	Edge_1RB Right	1	77	21.01	0.126	21.29	0.135	20.43	0.110
			256QAM	Edge_Full Right	2	76	21.02	0.126	21.33	0.136	20.50	0.112
		CP-OFDM	256QAM	Inner_1RB Left	1	1	19.42	0.087	**19.50**	**0.089**	19.26	0.084
			256QAM	Inner_1RB Right	1	76	18.98	0.079	19.28	0.085	18.47	0.070
			256QAM	Inner_Full	39	19	18.47	0.070	19.21	0.083	18.01	0.063
			256QAM	Outer_Full	78	0	18.76	0.075	19.38	0.087	18.34	0.068
			256QAM	Edge_1RB Left	1	0	19.39	0.087	19.45	0.088	19.22	0.084
			256QAM	Edge_Full Left	2	0	19.44	0.088	19.48	0.089	19.25	0.084
			256QAM	Edge_1RB Right	1	77	19.02	0.080	19.33	0.086	18.43	0.070
			256QAM	Edge_Full Right	2	76	18.98	0.079	19.30	0.085	18.43	0.070

NR Band 77/78-Low Band													
SCS (㎑)	BW (㎒)	Modulation		RB allocation	RB Size	RB Offset	631334 (3 470.01 ㎒)		645000 (3 675.00 ㎒)		658666 (3 879.99 ㎒)	
							(dB m)	(W)	(dB m)	(W)	(dB m)	(W)
30	40	DFT-s-OFDM	256QAM	Inner_1RB Left	1	1	20.86	0.122	21.54	0.143	20.56	0.114
			256QAM	Inner_1RB Right	1	104	21.03	0.127	21.36	0.137	19.82	0.096
			256QAM	Inner_Full	50	25	20.49	0.112	21.23	0.133	20.13	0.103
			256QAM	Outer_Full	100	0	20.66	0.116	21.34	0.136	20.21	0.105
			256QAM	Edge_1RB Left	1	0	20.84	0.121	21.53	0.142	20.53	0.113
			256QAM	Edge_Full Left	2	0	20.92	0.124	**21.60**	**0.145**	20.59	0.115
			256QAM	Edge_1RB Right	1	105	21.05	0.127	21.37	0.137	19.81	0.096
			256QAM	Edge_Full Right	2	104	21.12	0.129	21.42	0.139	19.88	0.097
		CP-OFDM	256QAM	Inner_1RB Left	1	1	19.42	0.087	**19.60**	**0.091**	19.06	0.081
			256QAM	Inner_1RB Right	1	104	19.13	0.082	19.43	0.088	18.34	0.068
			256QAM	Inner_Full	53	26	18.56	0.072	19.22	0.084	18.10	0.065
			256QAM	Outer_Full	106	0	19.07	0.081	19.40	0.087	18.45	0.070
			256QAM	Edge_1RB Left	1	0	19.34	0.086	19.56	0.090	19.03	0.080
			256QAM	Edge_Full Left	2	0	19.36	0.086	19.59	0.091	19.07	0.081
			256QAM	Edge_1RB Right	1	105	19.17	0.083	19.42	0.087	18.32	0.068
			256QAM	Edge_Full Right	2	104	19.16	0.082	19.42	0.087	18.39	0.069

NR Band 77/78-Low Band													
SCS (㎑)	BW (㎒)	Modulation		RB allocation	RB Size	RB Offset	631668 (3 475.02 ㎒)		645000 (3 675.00 ㎒)		658332 (3 874.98 ㎒)	
							(dB m)	(W)	(dB m)	(W)	(dB m)	(W)
30	50	DFT-s-OFDM	256QAM	Inner_1RB Left	1	1	20.83	0.121	21.34	0.136	20.37	0.109
			256QAM	Inner_1RB Right	1	131	21.01	0.126	21.04	0.127	19.78	0.095
			256QAM	Inner_Full	64	32	20.41	0.110	21.24	0.133	20.16	0.104
			256QAM	Outer_Full	128	0	20.67	0.117	21.23	0.133	20.28	0.107
			256QAM	Edge_1RB Left	1	0	20.79	0.120	21.39	0.138	20.35	0.108
			256QAM	Edge_Full Left	2	0	20.88	0.122	**21.45**	**0.140**	20.46	0.111
			256QAM	Edge_1RB Right	1	132	21.03	0.127	21.04	0.127	19.72	0.094
			256QAM	Edge_Full Right	2	131	21.09	0.129	21.10	0.129	19.79	0.095
		CP-OFDM	256QAM	Inner_1RB Left	1	1	**19.42**	**0.087**	19.41	0.087	18.88	0.077
			256QAM	Inner_1RB Right	1	131	18.96	0.079	19.11	0.081	18.24	0.067
			256QAM	Inner_Full	67	33	18.49	0.071	19.26	0.084	18.20	0.066
			256QAM	Outer_Full	133	0	18.89	0.077	19.22	0.084	18.48	0.070
			256QAM	Edge_1RB Left	1	0	19.33	0.086	19.37	0.086	18.86	0.077
			256QAM	Edge_Full Left	2	0	19.42	0.087	19.37	0.086	18.90	0.078
			256QAM	Edge_1RB Right	1	132	19.02	0.080	19.08	0.081	18.30	0.068
			256QAM	Edge_Full Right	2	131	19.06	0.081	19.10	0.081	18.32	0.068

NR Band 77/78-Low Band													
SCS (㎑)	BW (㎒)	Modulation		RB allocation	RB Size	RB Offset	632000 (3 480.00 ㎒)		645000 (3 675.00 ㎒)		658000 (3 870.00 ㎒)	
							(dB m)	(W)	(dB m)	(W)	(dB m)	(W)
30	60	DFT-s-OFDM	256QAM	Inner_1RB Left	1	1	20.93	0.124	**21.32**	**0.136**	20.17	0.104
			256QAM	Inner_1RB Right	1	160	21.18	0.131	21.05	0.127	19.79	0.095
			256QAM	Inner_Full	81	40	20.66	0.116	21.18	0.131	20.14	0.103
			256QAM	Outer_Full	162	0	20.81	0.121	21.20	0.132	20.28	0.107
			256QAM	Edge_1RB Left	1	0	20.94	0.124	21.32	0.136	20.16	0.104
			256QAM	Edge_Full Left	2	0	21.01	0.126	21.39	0.138	20.23	0.105
			256QAM	Edge_1RB Right	1	161	21.18	0.131	21.07	0.128	19.82	0.096
			256QAM	Edge_Full Right	2	160	21.24	0.133	21.12	0.129	19.90	0.098
		CP-OFDM	256QAM	Inner_1RB Left	1	1	19.40	0.087	**19.41**	**0.087**	18.62	0.073
			256QAM	Inner_1RB Right	1	160	19.28	0.085	19.12	0.082	18.38	0.069
			256QAM	Inner_Full	81	40	18.70	0.074	19.19	0.083	18.19	0.066
			256QAM	Outer_Full	162	0	18.97	0.079	19.23	0.084	18.49	0.071
			256QAM	Edge_1RB Left	1	0	19.37	0.086	19.36	0.086	18.62	0.073
			256QAM	Edge_Full Left	2	0	19.37	0.086	19.36	0.086	18.68	0.074
			256QAM	Edge_1RB Right	1	161	19.24	0.084	19.11	0.081	18.34	0.068
			256QAM	Edge_Full Right	2	160	19.24	0.084	19.15	0.082	18.38	0.069

NR Band 77/78-Low Band													
SCS (㎑)	BW (㎒)	Modulation		RB allocation	RB Size	RB Offset	632334 (3 485.01 ㎒)		645000 (3 675.00 ㎒)		657666 (3 864.99 ㎒)	
							(dB m)	(W)	(dB m)	(W)	(dB m)	(W)
30	70	DFT-s-OFDM	256QAM	Inner_1RB Left	1	1	20.90	0.123	21.35	0.136	20.26	0.106
			256QAM	Inner_1RB Right	1	187	21.39	0.138	21.05	0.127	19.72	0.094
			256QAM	Inner_Full	90	45	20.60	0.115	21.20	0.132	20.14	0.103
			256QAM	Outer_Full	180	0	19.67	0.093	21.22	0.132	20.25	0.106
			256QAM	Edge_1RB Left	1	0	20.87	0.122	21.33	0.136	20.26	0.106
			256QAM	Edge_Full Left	2	0	20.94	0.124	21.37	0.137	20.31	0.107
			256QAM	Edge_1RB Right	1	188	21.42	0.139	21.04	0.127	19.75	0.094
			256QAM	Edge_Full Right	2	187	**21.44**	**0.139**	21.10	0.129	19.84	0.096
		CP-OFDM	256QAM	Inner_1RB Left	1	1	19.37	0.086	19.46	0.088	18.61	0.073
			256QAM	Inner_1RB Right	1	187	19.44	0.088	19.14	0.082	18.25	0.067
			256QAM	Inner_Full	95	47	18.64	0.073	19.25	0.084	18.12	0.065
			256QAM	Outer_Full	189	0	19.00	0.079	19.24	0.084	18.58	0.072
			256QAM	Edge_1RB Left	1	0	19.33	0.086	19.40	0.087	18.57	0.072
			256QAM	Edge_Full Left	2	0	19.33	0.086	19.42	0.087	18.58	0.072
			256QAM	Edge_1RB Right	1	188	19.46	0.088	19.11	0.081	18.25	0.067
			256QAM	Edge_Full Right	2	187	**19.47**	**0.089**	19.09	0.081	18.27	0.067

NR Band 77/78-Low Band													
SCS (㎑)	BW (㎒)	Modulation		RB allocation	RB Size	RB Offset	632668 (3 490.02 ㎒)		645000 (3 675.00 ㎒)		657332 (3 859.98 ㎒)	
							(dB m)	(W)	(dB m)	(W)	(dB m)	(W)
30	80	DFT-s-OFDM	256QAM	Inner_1RB Left	1	1	20.86	0.122	21.39	0.138	20.35	0.108
			256QAM	Inner_1RB Right	1	215	21.48	0.141	21.06	0.128	19.87	0.097
			256QAM	Inner_Full	108	54	20.76	0.119	21.21	0.132	20.10	0.102
			256QAM	Outer_Full	216	0	21.05	0.127	21.24	0.133	20.26	0.106
			256QAM	Edge_1RB Left	1	0	20.82	0.121	21.43	0.139	20.33	0.108
			256QAM	Edge_Full Left	2	0	20.90	0.123	21.46	0.140	20.38	0.109
			256QAM	Edge_1RB Right	1	216	21.47	0.140	21.05	0.127	19.89	0.097
			256QAM	Edge_Full Right	2	215	**21.53**	**0.142**	21.16	0.131	19.98	0.100
		CP-OFDM	256QAM	Inner_1RB Left	1	1	19.43	0.088	19.49	0.089	18.40	0.069
			256QAM	Inner_1RB Right	1	215	19.49	0.089	19.12	0.082	18.35	0.068
			256QAM	Inner_Full	109	54	18.79	0.076	19.25	0.084	18.07	0.064
			256QAM	Outer_Full	217	0	19.12	0.082	19.25	0.084	18.60	0.072
			256QAM	Edge_1RB Left	1	0	19.37	0.086	19.44	0.088	18.37	0.069
			256QAM	Edge_Full Left	2	0	19.41	0.087	19.47	0.089	18.39	0.069
			256QAM	Edge_1RB Right	1	216	19.53	0.090	19.10	0.081	18.45	0.070
			256QAM	Edge_Full Right	2	215	**19.53**	**0.090**	19.09	0.081	18.46	0.070

NR Band 77/78-Low Band													
SCS (㎑)	BW (㎒)	Modulation		RB allocation	RB Size	RB Offset	633000 (3 495.00 ㎒)		645000 (3 675.00 ㎒)		657000 (3 855.00 ㎒)	
							(dB m)	(W)	(dB m)	(W)	(dB m)	(W)
30	90	DFT-s-OFDM	256QAM	Inner_1RB Left	1	1	20.41	0.110	21.41	0.138	20.19	0.104
			256QAM	Inner_1RB Right	1	243	21.49	0.141	21.13	0.130	19.48	0.089
			256QAM	Inner_Full	120	60	21.02	0.126	21.08	0.128	20.01	0.100
			256QAM	Outer_Full	243	0	21.10	0.129	21.28	0.134	20.25	0.106
			256QAM	Edge_1RB Left	1	0	20.45	0.111	21.40	0.138	20.19	0.104
			256QAM	Edge_Full Left	2	0	20.51	0.112	21.50	0.141	20.25	0.106
			256QAM	Edge_1RB Right	1	244	21.51	0.142	21.15	0.130	19.46	0.088
			256QAM	Edge_Full Right	2	243	**21.58**	**0.144**	21.22	0.132	19.55	0.090
		CP-OFDM	256QAM	Inner_1RB Left	1	1	19.45	0.088	19.50	0.089	18.43	0.070
			256QAM	Inner_1RB Right	1	243	**19.64**	**0.092**	19.21	0.083	18.57	0.072
			256QAM	Inner_Full	123	61	18.84	0.077	19.28	0.085	18.00	0.063
			256QAM	Outer_Full	245	0	19.15	0.082	19.28	0.085	18.66	0.073
			256QAM	Edge_1RB Left	1	0	18.34	0.068	19.42	0.087	18.25	0.067
			256QAM	Edge_Full Left	2	0	18.36	0.069	19.45	0.088	18.29	0.067
			256QAM	Edge_1RB Right	1	244	19.36	0.086	19.19	0.083	17.50	0.056
			256QAM	Edge_Full Right	2	243	19.40	0.087	19.22	0.084	17.55	0.057

NR Band 77/78-Low Band													
SCS (㎑)	BW (㎒)	Modulation		RB allocation	RB Size	RB Offset	633334 (3 500.01 ㎒)		645000 (3 675.00 ㎒)		6566666 (3 849.99 ㎒)		
							(dB m)	(W)	(dB m)	(W)	(dB m)	(W)
30	100	DFT-s-OFDM	256QAM	Inner_1RB Left	1	1	20.89	0.123	21.38	0.137	20.55	0.114
			256QAM	Inner_1RB Right	1	271	21.45	0.140	21.25	0.133	19.79	0.095
			256QAM	Inner_Full	135	67	20.94	0.124	21.26	0.134	19.53	0.090
			256QAM	Outer_Full	270	0	21.15	0.130	21.27	0.134	18.68	0.074
			256QAM	Edge_1RB Left	1	0	20.89	0.123	21.37	0.137	20.57	0.114
			256QAM	Edge_Full Left	2	0	20.98	0.125	21.44	0.139	20.64	0.116
			256QAM	Edge_1RB Right	1	272	21.46	0.140	21.25	0.133	19.81	0.096
			256QAM	Edge_Full Right	2	271	**21.51**	**0.142**	21.34	0.136	19.86	0.097
		CP-OFDM	256QAM	Inner_1RB Left	1	1	19.48	0.089	19.45	0.088	18.65	0.073
			256QAM	Inner_1RB Right	1	271	19.51	0.089	19.30	0.085	18.40	0.069
			256QAM	Inner_Full	137	68	19.03	0.080	19.26	0.084	17.92	0.062
			256QAM	Outer_Full	273	0	19.24	0.084	19.31	0.085	18.63	0.073
			256QAM	Edge_1RB Left	1	0	19.41	0.087	19.41	0.087	18.60	0.072
			256QAM	Edge_Full Left	2	0	19.46	0.088	19.42	0.087	18.63	0.073
			256QAM	Edge_1RB Right	1	272	19.48	0.089	19.27	0.085	18.37	0.069
			256QAM	Edge_Full Right	2	271	**19.52**	**0.090**	19.32	0.086	18.44	0.070

High Band (3 900 ~ 3 980 ㎒)_IC

NR Band 77-High Band												
SCS (㎑)	BW (㎒)	Modulation		RB allocation	RB Size	RB Offset	660668 (3 910.02 ㎒)		662666 (3 939.99 ㎒)		664666 (3 969.99 ㎒)	
							(dB m)	(W)	(dB m)	(W)	(dB m)	(W)
30	20	DFT-s-OFDM	256QAM	Inner_1RB Left	1	1	20.09	0.102	20.08	0.102	20.65	0.116
			256QAM	Inner_1RB Right	1	49	19.75	0.094	**20.95**	**0.124**	20.67	0.117
			256QAM	Inner_Full	25	12	18.81	0.076	19.41	0.087	19.66	0.092
			256QAM	Outer_Full	50	0	19.05	0.080	19.60	0.091	19.80	0.095
			256QAM	Edge_1RB Left	1	0	19.60	0.091	19.52	0.090	20.08	0.102
			256QAM	Edge_Full Left	2	0	19.65	0.092	19.59	0.091	20.15	0.104
			256QAM	Edge_1RB Right	1	50	19.21	0.083	20.41	0.110	20.06	0.101
			256QAM	Edge_Full Right	2	49	19.28	0.085	20.49	0.112	20.16	0.104
		CP-OFDM	256QAM	Inner_1RB Left	1	1	18.10	0.065	18.06	0.064	18.59	0.072
			256QAM	Inner_1RB Right	1	49	17.73	0.059	**18.92**	**0.078**	18.60	0.072
			256QAM	Inner_Full	25	12	16.79	0.048	17.39	0.055	17.65	0.058
			256QAM	Outer_Full	51	0	17.35	0.054	17.82	0.061	17.98	0.063
			256QAM	Edge_1RB Left	1	0	18.09	0.064	18.03	0.064	18.61	0.073
			256QAM	Edge_Full Left	2	0	18.15	0.065	18.06	0.064	18.66	0.073
			256QAM	Edge_1RB Right	1	50	17.71	0.059	18.88	0.077	18.63	0.073
			256QAM	Edge_Full Right	2	49	17.73	0.059	18.93	0.078	18.67	0.074