**ULCA_12A-66A_Ant. 3_Below 3 ㎓**

| Frequency (㎒) | Measured Level (dBμV) | Ant. Pol. | AF (dB/m) | AMP+CL (dB) | E (dBμV/m) | CF (dB) | E.R.P. / E.I.R.P. (dB m) | Limit (dB m) | Margin (dB) |
|---|---|---|---|---|---|---|---|---|---|
| LTE B12 10 ㎒ Low channel 1RB, QPSK | | | | | | | | | |
| 3 135.15 | 49.11 | H | 30.27 | -32.30 | 47.08 | -97.41 | -50.33 | -13 | 37.33 |
| 3 135.22 | 51.46 | V | 30.27 | -32.31 | 49.42 | -97.41 | -47.99 | -13 | 34.99 |
| Above 3 200.00 | Not detected | – | – | – | – | – | – | – | – |
| LTE B66 20 ㎒ Low channel 1RB, QPSK | | | | | | | | | |
| Below 1 000.00 | Not detected | – | – | – | – | – | – | – | – |
| Above 1 000.00 | Not detected | – | – | – | – | – | – | – | – |
| LTE B12 10 ㎒ Middle channel 1RB, QPSK | | | | | | | | | |
| 3 160.01 | 49.01 | H | 30.36 | -32.27 | 47.10 | -97.41 | -50.31 | -13 | 37.31 |
| 3 160.01 | 49.01 | V | 30.36 | -32.27 | 47.10 | -97.41 | -50.31 | -13 | 37.31 |
| Above 3 200.00 | Not detected | – | – | – | – | – | – | – | – |
| LTE B66 20 ㎒ Middle channel 1RB, QPSK | | | | | | | | | |
| Below 1 000.00 | Not detected | – | – | – | – | – | – | – | – |
| Above 1 000.00 | Not detected | – | – | – | – | – | – | – | – |
| **Frequency (㎒)** | **Measured Level (dBμV)** | **Ant. Pol.** | **AF (dB/m)** | **AMP+CL (dB)** | **E (dBμV/m)** | **CF (dB)** | **E.R.P. / E.I.R.P. (dB m)** | **Limit (dB m)** | **Margin (dB)** |
| LTE B12 10 ㎒ High channel 1RB, QPSK | | | | | | | | | |
| 3 160.15 | 51.29 | H | 30.36 | -32.26 | 49.39 | -97.41 | -48.02 | -13 | 35.02 |
| 3 185.12 | 49.27 | V | 30.51 | -31.71 | 48.07 | -97.41 | -49.34 | -13 | 36.34 |
| Above 3 200.00 | Not detected | – | – | – | – | – | – | – | – |
| LTE B66 20 ㎒ High channel 1RB, QPSK | | | | | | | | | |
| Below 1 000.00 | Not detected | – | – | – | – | – | – | – | – |
| Above 1 000.00 | Not detected | – | – | – | – | – | – | – | – |

**Remark;**

1. AF = Antenna Factor, CL = Cable Loss, CF = Conversion Factor.
2. E (dBμV/m) = Measured Level (dBμV) + Antenna Factor (dB/m) + AMP (dB) + Cable Loss (dB).
3. E.I.R.P. (dB m) = E (dBμV/m) + CF (dB).
4. E.R.P. (dB m) = E (dBμV/m) + CF (dB) - 2.15 (dB); where E.R.P. and E.I.R.P. are expressed in consistent units.
5. CF (dB) = 20 log D - 104.8; where D is the measurement distance in meters, According to KDB 971168 D01 v03r01 5.8.4.
6. The frequency spectrum is examined from 9 ㎑ to the 10th harmonic of the fundamental frequency of the transmitter. No other spurious and harmonic emissions were reported greater than listed emissions above table.

# 3. Conducted Output Power

## 3.1. Limit

CFR 47, Section FCC §2.1046 and IC RSS-Gen Issue 5 6.12.

## 3.2. Test Procedure

Output power shall be measured at the RF output terminals for all configurations.

1. The RF output of the transmitter was connected to the input of the mobile test unit in order to establish communication with the EUT.
2. The EUT was set up for the max. output power with pseudo random data modulation by using mobile test unit parameters.
3. The measurement performed using a wideband RF power meter.
4. This EUT was tested under all configurations and the highest power was investigated and reported.

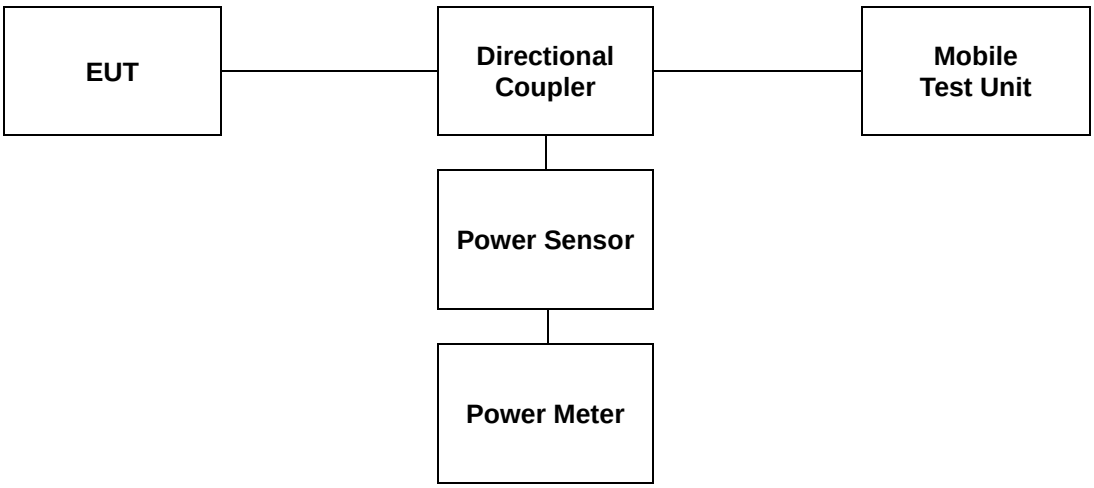

## 3.3. Test Result

Ambient temperature : (23 ± 1) ℃
Relative humidity : 47 % R.H.

| WCDMA Ⅱ | | | | | | | |
|---|---|---|---|---|---|---|---|
| Mode | 3GPP 34.121 Subtest | Conducted Output Power | | | | | |
| | | 9262 (1 852.4 ㎒) | | 9400 (1 880.0 ㎒) | | 9538 (1 907.6 ㎒) | |
| | | (dB m) | (W) | (dB m) | (W) | (dB m) | (W) |
| Release 99 | 12.2 Kbps RMC | 23.22 | 0.210 | 23.27 | 0.212 | **23.47** | **0.222** |
| HSDPA | Subtest 1 | 22.24 | 0.167 | 22.30 | 0.170 | **22.55** | **0.180** |
| | Subtest 2 | 21.64 | 0.146 | 22.33 | 0.171 | 22.44 | 0.175 |
| | Subtest 3 | 21.69 | 0.148 | 21.97 | 0.157 | 22.05 | 0.160 |
| | Subtest 4 | 21.60 | 0.145 | 21.81 | 0.152 | 22.02 | 0.159 |
| HSUPA | Subtest 1 | 21.40 | 0.138 | 22.48 | 0.177 | 22.54 | 0.179 |
| | Subtest 2 | 20.45 | 0.111 | 20.45 | 0.111 | 20.50 | 0.113 |
| | Subtest 3 | 20.84 | 0.121 | 21.53 | 0.142 | 21.41 | 0.138 |
| | Subtest 4 | 19.19 | 0.083 | 20.17 | 0.104 | 20.18 | 0.104 |
| | Subtest 5 | 21.49 | 0.141 | 21.54 | 0.143 | 21.58 | 0.144 |
| DC-HSDPA | Subtest 1 | 22.30 | 0.170 | 22.27 | 0.169 | 22.51 | 0.178 |
| | Subtest 2 | 21.50 | 0.141 | 22.26 | 0.168 | 22.43 | 0.175 |
| | Subtest 3 | 21.06 | 0.128 | 21.93 | 0.156 | 22.03 | 0.160 |
| | Subtest 4 | 21.19 | 0.132 | 21.86 | 0.153 | 22.03 | 0.160 |
| HSPA+ | | 22.42 | 0.175 | 22.34 | 0.171 | 22.55 | 0.180 |

| WCDMA Ⅴ | | | | | | | |
|---|---|---|---|---|---|---|---|
| Mode | 3GPP 34.121 Subtest | Conducted Output Power | | | | | |
| | | 4132 (826.4 ㎒) | | 4183 (836.6 ㎒) | | 4233 (846.6 ㎒) | |
| | | (dB m) | (W) | (dB m) | (W) | (dB m) | (W) |
| Release 99 | 12.2 Kbps RMC | **23.85** | **0.243** | 23.84 | 0.242 | 22.98 | 0.199 |
| HSDPA | Subtest 1 | **22.83** | **0.192** | 22.60 | 0.182 | 21.73 | 0.149 |
| | Subtest 2 | 22.55 | 0.180 | 22.76 | 0.189 | 21.78 | 0.151 |
| | Subtest 3 | 22.22 | 0.167 | 22.20 | 0.166 | 21.40 | 0.138 |
| | Subtest 4 | 22.18 | 0.165 | 22.21 | 0.166 | 21.22 | 0.132 |
| HSUPA | Subtest 1 | 22.77 | 0.189 | 22.80 | 0.191 | 21.78 | 0.151 |
| | Subtest 2 | 20.78 | 0.120 | 20.75 | 0.119 | 19.78 | 0.095 |
| | Subtest 3 | 21.80 | 0.151 | 21.78 | 0.151 | 20.84 | 0.121 |
| | Subtest 4 | 21.20 | 0.132 | 21.19 | 0.132 | 20.21 | 0.105 |
| | Subtest 5 | 22.80 | 0.191 | 22.79 | 0.190 | 22.77 | 0.189 |
| DC-HSDPA | Subtest 1 | 22.80 | 0.191 | 22.72 | 0.187 | 21.83 | 0.152 |
| | Subtest 2 | 22.76 | 0.189 | 22.75 | 0.188 | 21.81 | 0.152 |
| | Subtest 3 | 22.24 | 0.167 | 22.21 | 0.166 | 21.24 | 0.133 |
| | Subtest 4 | 22.72 | 0.187 | 22.67 | 0.185 | 21.80 | 0.151 |
| HSPA+ | | 22.34 | 0.171 | 22.58 | 0.181 | 22.26 | 0.168 |

| LTE Band 25/2 | | | | | | | | | |
|---|---|---|---|---|---|---|---|---|---|
| Bandwidth (MHz) | Modulation | RB Size | RB Offset | Conducted Output Power | | | | | |
| | | | | 26047 (1 850.7 MHz) | | 26365 (1 882.5 MHz) | | 26683 (1 914.3 MHz) | |
| | | | | (dBm) | (W) | (dBm) | (W) | (dBm) | (W) |
| 1.4 | QPSK | 1 | 0 | 23.06 | 0.202 | 22.92 | 0.196 | **23.29** | **0.213** |
| | | 1 | 3 | 22.97 | 0.198 | 23.08 | 0.203 | 23.13 | 0.206 |
| | | 1 | 5 | 23.00 | 0.200 | 22.94 | 0.197 | 23.24 | 0.211 |
| | | 3 | 0 | 22.96 | 0.198 | 23.07 | 0.203 | 23.18 | 0.208 |
| | | 3 | 2 | 23.01 | 0.200 | 23.02 | 0.200 | 23.26 | 0.212 |
| | | 3 | 3 | 23.00 | 0.200 | 22.98 | 0.199 | 23.19 | 0.208 |
| | | 6 | 0 | 22.01 | 0.159 | 23.09 | 0.204 | 23.24 | 0.211 |
| | 16QAM | 1 | 0 | 22.25 | 0.168 | 22.54 | 0.179 | 22.57 | 0.181 |
| | | 1 | 3 | 22.40 | 0.174 | 22.26 | 0.168 | 22.43 | 0.175 |
| | | 1 | 5 | 22.34 | 0.171 | 22.24 | 0.167 | 22.47 | 0.177 |
| | | 3 | 0 | 22.24 | 0.167 | 22.23 | 0.167 | 22.79 | 0.190 |
| | | 3 | 2 | 22.15 | 0.164 | 22.34 | 0.171 | 22.68 | 0.185 |
| | | 3 | 3 | 22.11 | 0.163 | 22.24 | 0.167 | **22.83** | **0.192** |
| | | 6 | 0 | 21.08 | 0.128 | 21.13 | 0.130 | 21.29 | 0.135 |
| | 64QAM | 1 | 0 | 21.22 | 0.132 | 21.37 | 0.137 | 21.57 | 0.144 |
| | | 1 | 3 | 21.33 | 0.136 | 21.12 | 0.129 | 21.60 | 0.145 |
| | | 1 | 5 | 21.05 | 0.127 | 21.27 | 0.134 | 21.55 | 0.143 |
| | | 3 | 0 | 21.16 | 0.131 | 21.09 | 0.129 | 21.16 | 0.131 |
| | | 3 | 2 | 21.01 | 0.126 | 21.20 | 0.132 | **21.67** | **0.147** |
| | | 3 | 3 | 21.12 | 0.129 | 21.27 | 0.134 | 21.57 | 0.144 |
| | | 6 | 0 | 20.10 | 0.102 | 20.26 | 0.106 | 20.13 | 0.103 |
| | 256QAM | 1 | 0 | 18.13 | 0.065 | 18.09 | 0.064 | 18.28 | 0.067 |
| | | 1 | 3 | 18.15 | 0.065 | 18.10 | 0.065 | 18.28 | 0.067 |
| | | 1 | 5 | 18.11 | 0.065 | 18.03 | 0.064 | 18.32 | 0.068 |
| | | 3 | 0 | 18.12 | 0.065 | 18.04 | 0.064 | 18.16 | 0.065 |
| | | 3 | 2 | 18.14 | 0.065 | 17.90 | 0.062 | 18.16 | 0.065 |
| | | 3 | 3 | 18.09 | 0.064 | 17.93 | 0.062 | 18.18 | 0.066 |
| | | 6 | 0 | 18.13 | 0.065 | 17.91 | 0.062 | **18.34** | **0.068** |

| LTE Band 25/2 | | | | | | | | | |
|---|---|---|---|---|---|---|---|---|---|
| Bandwidth (MHz) | Modulation | RB Size | RB Offset | Conducted Output Power | | | | | |
| | | | | 26047 (1 851.5 MHz) | | 26365 (1 882.5 MHz) | | 26683 (1 913.5 MHz) | |
| | | | | (dBm) | (W) | (dBm) | (W) | (dBm) | (W) |
| 3 | QPSK | 1 | 0 | 22.99 | 0.199 | 23.03 | 0.201 | 23.22 | 0.210 |
| | | 1 | 7 | 23.25 | 0.211 | 22.92 | 0.196 | **23.48** | **0.223** |
| | | 1 | 14 | 23.17 | 0.207 | 23.02 | 0.200 | 23.29 | 0.213 |
| | | 8 | 0 | 21.98 | 0.158 | 22.08 | 0.161 | 22.21 | 0.166 |
| | | 8 | 4 | 22.05 | 0.160 | 22.04 | 0.160 | 22.23 | 0.167 |
| | | 8 | 7 | 22.01 | 0.159 | 22.01 | 0.159 | 22.30 | 0.170 |
| | | 15 | 0 | 22.06 | 0.161 | 22.06 | 0.161 | 22.26 | 0.168 |
| | 16QAM | 1 | 0 | 22.26 | 0.168 | 22.39 | 0.173 | 22.54 | 0.179 |
| | | 1 | 7 | 22.38 | 0.173 | 22.41 | 0.174 | 22.72 | 0.187 |
| | | 1 | 14 | 22.34 | 0.171 | 22.27 | 0.169 | **22.83** | **0.192** |
| | | 8 | 0 | 21.19 | 0.132 | 21.15 | 0.130 | 21.32 | 0.136 |
| | | 8 | 4 | 21.28 | 0.134 | 21.19 | 0.132 | 21.35 | 0.136 |
| | | 8 | 7 | 21.19 | 0.132 | 21.20 | 0.132 | 21.28 | 0.134 |
| | | 15 | 0 | 21.08 | 0.128 | 21.03 | 0.127 | 21.30 | 0.135 |
| | 64QAM | 1 | 0 | 21.37 | 0.137 | 21.07 | 0.128 | 21.58 | 0.144 |
| | | 1 | 7 | 21.32 | 0.136 | 21.31 | 0.135 | **21.70** | **0.148** |
| | | 1 | 14 | 21.54 | 0.143 | 21.00 | 0.126 | 21.35 | 0.136 |
| | | 8 | 0 | 20.17 | 0.104 | 20.08 | 0.102 | 20.27 | 0.106 |
| | | 8 | 4 | 20.19 | 0.104 | 20.14 | 0.103 | 20.30 | 0.107 |
| | | 8 | 7 | 20.16 | 0.104 | 20.09 | 0.102 | 20.35 | 0.108 |
| | | 15 | 0 | 20.18 | 0.104 | 20.09 | 0.102 | 20.28 | 0.107 |
| | 256QAM | 1 | 0 | 18.06 | 0.064 | 18.05 | 0.064 | 18.21 | 0.066 |
| | | 1 | 7 | 18.02 | 0.063 | 18.07 | 0.064 | 18.35 | 0.068 |
| | | 1 | 14 | 17.77 | 0.060 | 18.20 | 0.066 | **18.36** | **0.069** |
| | | 8 | 0 | 17.92 | 0.062 | 17.91 | 0.062 | 18.01 | 0.063 |
| | | 8 | 4 | 18.06 | 0.064 | 17.94 | 0.062 | 18.09 | 0.064 |
| | | 8 | 7 | 17.87 | 0.061 | 17.87 | 0.061 | 18.19 | 0.066 |
| | | 15 | 0 | 17.93 | 0.062 | 17.92 | 0.062 | 18.09 | 0.064 |

| LTE Band 25/2 | | | | | | | | | |
|---|---|---|---|---|---|---|---|---|---|
| Bandwidth (MHz) | Modulation | RB Size | RB Offset | Conducted Output Power | | | | | |
| | | | | 26065 (1 852.5 MHz) | | 26365 (1 882.5 MHz) | | 26665 (1 912.5 MHz) | |
| | | | | (dBm) | (W) | (dBm) | (W) | (dBm) | (W) |
| 5 | QPSK | 1 | 0 | 23.11 | 0.205 | 23.13 | 0.206 | 23.04 | 0.201 |
| | | 1 | 12 | 23.22 | 0.210 | 23.06 | 0.202 | 23.33 | 0.215 |
| | | 1 | 24 | **23.35** | **0.216** | 23.13 | 0.206 | 23.33 | 0.215 |
| | | 12 | 0 | 22.06 | 0.161 | 22.07 | 0.161 | 22.21 | 0.166 |
| | | 12 | 6 | 22.03 | 0.160 | 22.04 | 0.160 | 22.32 | 0.171 |
| | | 12 | 13 | 22.14 | 0.164 | 22.17 | 0.165 | 22.29 | 0.169 |
| | | 25 | 0 | 22.15 | 0.164 | 22.00 | 0.158 | 22.24 | 0.167 |
| | 16QAM | 1 | 0 | 22.57 | 0.181 | 22.28 | 0.169 | 22.68 | 0.185 |
| | | 1 | 12 | 22.60 | 0.182 | 22.64 | 0.184 | **22.75** | **0.188** |
| | | 1 | 24 | 22.65 | 0.184 | 22.46 | 0.176 | 22.75 | 0.188 |
| | | 12 | 0 | 21.21 | 0.132 | 21.12 | 0.129 | 21.25 | 0.133 |
| | | 12 | 6 | 21.23 | 0.133 | 21.18 | 0.131 | 21.30 | 0.135 |
| | | 12 | 13 | 21.22 | 0.132 | 21.14 | 0.130 | 21.34 | 0.136 |
| | | 25 | 0 | 21.17 | 0.131 | 21.08 | 0.128 | 21.32 | 0.136 |
| | 64QAM | 1 | 0 | 21.42 | 0.139 | 21.23 | 0.133 | 21.47 | 0.140 |
| | | 1 | 12 | 21.38 | 0.137 | 21.40 | 0.138 | 21.32 | 0.136 |
| | | 1 | 24 | 21.66 | 0.147 | 21.36 | 0.137 | **21.66** | **0.147** |
| | | 12 | 0 | 20.17 | 0.104 | 20.08 | 0.102 | 20.33 | 0.108 |
| | | 12 | 6 | 20.21 | 0.105 | 20.15 | 0.104 | 20.32 | 0.108 |
| | | 12 | 13 | 20.13 | 0.103 | 20.14 | 0.103 | 20.22 | 0.105 |
| | | 25 | 0 | 20.19 | 0.104 | 20.06 | 0.101 | 20.40 | 0.110 |
| | 256QAM | 1 | 0 | 17.94 | 0.062 | 17.78 | 0.060 | 17.99 | 0.063 |
| | | 1 | 12 | 17.94 | 0.062 | 18.10 | 0.065 | **18.23** | **0.067** |
| | | 1 | 24 | 18.05 | 0.064 | 18.00 | 0.063 | 17.85 | 0.061 |
| | | 12 | 0 | 17.84 | 0.061 | 17.87 | 0.061 | 18.08 | 0.064 |
| | | 12 | 6 | 17.81 | 0.060 | 17.92 | 0.062 | 18.11 | 0.065 |
| | | 12 | 13 | 17.89 | 0.062 | 17.92 | 0.062 | 18.07 | 0.064 |
| | | 25 | 0 | 17.85 | 0.061 | 17.82 | 0.061 | 18.11 | 0.065 |

| LTE Band 25/2 | | | | | | | | | |
|---|---|---|---|---|---|---|---|---|---|
| Bandwidth (MHz) | Modulation | RB Size | RB Offset | Conducted Output Power | | | | | |
| | | | | 26090 (1 855.0 MHz) | | 26365 (1 882.5 MHz) | | 26640 (1 910.0 MHz) | |
| | | | | (dBm) | (W) | (dBm) | (W) | (dBm) | (W) |
| 10 | QPSK | 1 | 0 | 23.29 | 0.213 | 23.14 | 0.206 | 23.22 | 0.210 |
| | | 1 | 25 | 23.20 | 0.209 | 23.11 | 0.205 | 23.30 | 0.214 |
| | | 1 | 49 | 23.18 | 0.208 | **23.35** | **0.216** | 23.32 | 0.215 |
| | | 25 | 0 | 22.15 | 0.164 | 22.22 | 0.167 | 22.13 | 0.163 |
| | | 25 | 12 | 22.23 | 0.167 | 22.19 | 0.166 | 22.16 | 0.164 |
| | | 25 | 25 | 22.17 | 0.165 | 22.23 | 0.167 | 22.10 | 0.162 |
| | | 50 | 0 | 22.26 | 0.168 | 22.07 | 0.161 | 22.08 | 0.161 |
| | 16QAM | 1 | 0 | 22.73 | 0.187 | 22.53 | 0.179 | 22.60 | 0.182 |
| | | 1 | 25 | 22.76 | 0.189 | 22.58 | 0.181 | **22.78** | **0.190** |
| | | 1 | 49 | 22.73 | 0.187 | 22.52 | 0.179 | 22.70 | 0.186 |
| | | 25 | 0 | 21.16 | 0.131 | 21.16 | 0.131 | 21.15 | 0.130 |
| | | 25 | 12 | 21.24 | 0.133 | 21.23 | 0.133 | 21.21 | 0.132 |
| | | 25 | 25 | 21.18 | 0.131 | 21.28 | 0.134 | 21.08 | 0.128 |
| | | 50 | 0 | 21.33 | 0.136 | 21.14 | 0.130 | 21.06 | 0.128 |
| | 64QAM | 1 | 0 | 21.33 | 0.136 | 21.59 | 0.144 | 21.44 | 0.139 |
| | | 1 | 25 | 21.52 | 0.142 | 21.20 | 0.132 | 21.36 | 0.137 |
| | | 1 | 49 | **21.64** | **0.146** | 21.50 | 0.141 | 21.30 | 0.135 |
| | | 25 | 0 | 20.19 | 0.104 | 20.21 | 0.105 | 20.12 | 0.103 |
| | | 25 | 12 | 20.27 | 0.106 | 20.16 | 0.104 | 20.17 | 0.104 |
| | | 25 | 25 | 20.23 | 0.105 | 20.18 | 0.104 | 20.15 | 0.104 |
| | | 50 | 0 | 20.21 | 0.105 | 20.14 | 0.103 | 20.29 | 0.107 |
| | 256QAM | 1 | 0 | 17.96 | 0.063 | 17.89 | 0.062 | 18.13 | 0.065 |
| | | 1 | 25 | 17.90 | 0.062 | 18.02 | 0.063 | **18.16** | **0.065** |
| | | 1 | 49 | 18.07 | 0.064 | 18.04 | 0.064 | 18.12 | 0.065 |
| | | 25 | 0 | 18.04 | 0.064 | 17.89 | 0.062 | 18.04 | 0.064 |
| | | 25 | 12 | 17.82 | 0.061 | 17.91 | 0.062 | 18.04 | 0.064 |
| | | 25 | 25 | 17.93 | 0.062 | 17.90 | 0.062 | 18.08 | 0.064 |
| | | 50 | 0 | 17.83 | 0.061 | 17.83 | 0.061 | 18.09 | 0.064 |

| LTE Band 25/2 | | | | | | | | | |
|---|---|---|---|---|---|---|---|---|---|
| Bandwidth (MHz) | Modulation | RB Size | RB Offset | Conducted Output Power | | | | | |
| | | | | 26115 (1 857.5 MHz) | | 26365 (1 882.5 MHz) | | 26615 (1 907.5 MHz) | |
| | | | | (dBm) | (W) | (dBm) | (W) | (dBm) | (W) |
| 15 | QPSK | 1 | 0 | 23.38 | 0.218 | 23.01 | 0.200 | 23.16 | 0.207 |
| | | 1 | 36 | 23.20 | 0.209 | 23.08 | 0.203 | 23.25 | 0.211 |
| | | 1 | 74 | 23.16 | 0.207 | 23.08 | 0.203 | **23.42** | **0.220** |
| | | 36 | 0 | 22.20 | 0.166 | 22.03 | 0.160 | 22.09 | 0.162 |
| | | 36 | 18 | 22.22 | 0.167 | 21.99 | 0.158 | 22.07 | 0.161 |
| | | 36 | 37 | 22.23 | 0.167 | 22.02 | 0.159 | 22.02 | 0.159 |
| | | 75 | 0 | 22.19 | 0.166 | 21.95 | 0.157 | 22.04 | 0.160 |
| | 16QAM | 1 | 0 | 22.23 | 0.167 | 22.05 | 0.160 | 22.05 | 0.160 |
| | | 1 | 36 | 22.21 | 0.166 | 21.96 | 0.157 | **22.29** | **0.169** |
| | | 1 | 74 | 22.19 | 0.166 | 21.98 | 0.158 | 22.18 | 0.165 |
| | | 36 | 0 | 21.22 | 0.132 | 20.97 | 0.125 | 21.11 | 0.129 |
| | | 36 | 18 | 21.30 | 0.135 | 20.94 | 0.124 | 21.06 | 0.128 |
| | | 36 | 37 | 21.14 | 0.130 | 21.05 | 0.127 | 21.04 | 0.127 |
| | | 75 | 0 | 21.21 | 0.132 | 20.96 | 0.125 | 21.08 | 0.128 |
| | 64QAM | 1 | 0 | 21.18 | 0.131 | 21.13 | 0.130 | 21.11 | 0.129 |
| | | 1 | 36 | 21.15 | 0.130 | 21.18 | 0.131 | 21.13 | 0.130 |
| | | 1 | 74 | **21.19** | **0.132** | 21.16 | 0.131 | 21.08 | 0.128 |
| | | 36 | 0 | 20.20 | 0.105 | 20.02 | 0.100 | 20.11 | 0.103 |
| | | 36 | 18 | 20.23 | 0.105 | 19.98 | 0.100 | 20.13 | 0.103 |
| | | 36 | 37 | 20.28 | 0.107 | 20.02 | 0.100 | 20.03 | 0.101 |
| | | 75 | 0 | 20.36 | 0.109 | 19.93 | 0.098 | 20.01 | 0.100 |
| | 256QAM | 1 | 0 | 18.04 | 0.064 | 17.82 | 0.061 | 18.11 | 0.065 |
| | | 1 | 36 | 17.93 | 0.062 | 17.97 | 0.063 | 18.09 | 0.064 |
| | | 1 | 74 | 18.00 | 0.063 | 17.99 | 0.063 | **18.21** | **0.066** |
| | | 36 | 0 | 17.93 | 0.062 | 17.91 | 0.062 | 18.00 | 0.063 |
| | | 36 | 18 | 17.89 | 0.062 | 17.88 | 0.061 | 18.08 | 0.064 |
| | | 36 | 37 | 18.00 | 0.063 | 17.87 | 0.061 | 18.00 | 0.063 |
| | | 75 | 0 | 17.78 | 0.060 | 17.88 | 0.061 | 17.96 | 0.063 |

| LTE Band 25/2 | | | | | | | | | |
|---|---|---|---|---|---|---|---|---|---|
| Bandwidth (MHz) | Modulation | RB Size | RB Offset | Conducted Output Power | | | | | |
| | | | | 26140 (1 860.0 MHz) | | 26365 (1 882.5 MHz) | | 26590 (1 905.0 MHz) | |
| | | | | (dBm) | (W) | (dBm) | (W) | (dBm) | (W) |
| 20 | QPSK | 1 | 0 | 23.25 | 0.211 | **23.49** | **0.223** | 23.28 | 0.213 |
| | | 1 | 50 | 23.12 | 0.205 | 23.11 | 0.205 | 23.16 | 0.207 |
| | | 1 | 99 | 23.15 | 0.207 | 23.02 | 0.200 | 23.17 | 0.207 |
| | | 50 | 0 | 22.11 | 0.163 | 22.06 | 0.161 | 22.04 | 0.160 |
| | | 50 | 25 | 22.21 | 0.166 | 22.13 | 0.163 | 22.13 | 0.163 |
| | | 50 | 50 | 22.16 | 0.164 | 22.22 | 0.167 | 22.05 | 0.160 |
| | | 100 | 0 | 22.19 | 0.166 | 22.05 | 0.160 | 22.13 | 0.163 |
| | 16QAM | 1 | 0 | 22.36 | 0.172 | 22.45 | 0.176 | 22.38 | 0.173 |
| | | 1 | 50 | 22.39 | 0.173 | 22.31 | 0.170 | 22.45 | 0.176 |
| | | 1 | 99 | 22.46 | 0.176 | 22.42 | 0.175 | **22.74** | **0.188** |
| | | 50 | 0 | 21.10 | 0.129 | 21.08 | 0.128 | 21.12 | 0.129 |
| | | 50 | 25 | 21.22 | 0.132 | 21.11 | 0.129 | 21.19 | 0.132 |
| | | 50 | 50 | 21.12 | 0.129 | 21.21 | 0.132 | 21.12 | 0.129 |
| | | 100 | 0 | 21.17 | 0.131 | 21.16 | 0.131 | 21.20 | 0.132 |
| | 64QAM | 1 | 0 | 21.54 | 0.143 | 21.38 | 0.137 | 21.05 | 0.127 |
| | | 1 | 50 | **21.66** | **0.147** | 21.25 | 0.133 | 21.28 | 0.134 |
| | | 1 | 99 | 21.49 | 0.141 | 21.31 | 0.135 | 21.49 | 0.141 |
| | | 50 | 0 | 20.17 | 0.104 | 20.05 | 0.101 | 20.05 | 0.101 |
| | | 50 | 25 | 20.13 | 0.103 | 20.08 | 0.102 | 20.15 | 0.104 |
| | | 50 | 50 | 20.06 | 0.101 | 20.19 | 0.104 | 20.13 | 0.103 |
| | | 100 | 0 | 20.15 | 0.104 | 20.10 | 0.102 | 20.15 | 0.104 |
| | 256QAM | 1 | 0 | 18.02 | 0.063 | 18.14 | 0.065 | 18.12 | 0.065 |
| | | 1 | 50 | 18.15 | 0.065 | 18.06 | 0.064 | **18.24** | **0.067** |
| | | 1 | 99 | 18.13 | 0.065 | 17.89 | 0.062 | 18.15 | 0.065 |
| | | 50 | 0 | 17.99 | 0.063 | 17.89 | 0.062 | 18.05 | 0.064 |
| | | 50 | 25 | 17.84 | 0.061 | 17.89 | 0.062 | 18.08 | 0.064 |
| | | 50 | 50 | 17.79 | 0.060 | 17.85 | 0.061 | 17.99 | 0.063 |
| | | 100 | 0 | 17.78 | 0.060 | 17.89 | 0.062 | 17.99 | 0.063 |

| LTE Band 66/4 | | | | | | | | | |
|---|---|---|---|---|---|---|---|---|---|
| Bandwidth (MHz) | Modulation | RB Size | RB Offset | Conducted Output Power | | | | | |
| | | | | 131979 (1 710.7 MHz) | | 132322 (1 745.0 MHz) | | 132665 (1 779.3 MHz) | |
| | | | | (dBm) | (W) | (dBm) | (W) | (dBm) | (W) |
| 1.4 | QPSK | 1 | 0 | 22.59 | 0.182 | **23.03** | **0.201** | 22.77 | 0.189 |
| | | 1 | 3 | 22.71 | 0.187 | 22.68 | 0.185 | 22.65 | 0.184 |
| | | 1 | 5 | 22.85 | 0.193 | 22.69 | 0.186 | 22.69 | 0.186 |
| | | 3 | 0 | 22.66 | 0.185 | 22.67 | 0.185 | 23.00 | 0.200 |
| | | 3 | 2 | 22.67 | 0.185 | 22.67 | 0.185 | 22.76 | 0.189 |
| | | 3 | 3 | 22.83 | 0.192 | 23.03 | 0.201 | 22.67 | 0.185 |
| | | 6 | 0 | 21.78 | 0.151 | 22.66 | 0.185 | 22.79 | 0.190 |
| | 16QAM | 1 | 0 | 21.95 | 0.157 | 22.11 | 0.163 | 21.96 | 0.157 |
| | | 1 | 3 | 21.90 | 0.155 | 22.03 | 0.160 | **22.27** | **0.169** |
| | | 1 | 5 | 21.95 | 0.157 | 21.86 | 0.153 | 22.04 | 0.160 |
| | | 3 | 0 | 21.76 | 0.150 | 22.10 | 0.162 | 22.09 | 0.162 |
| | | 3 | 2 | 21.75 | 0.150 | 21.94 | 0.156 | 22.22 | 0.167 |
| | | 3 | 3 | 21.81 | 0.152 | 22.08 | 0.161 | 21.93 | 0.156 |
| | | 6 | 0 | 20.85 | 0.122 | 20.93 | 0.124 | 20.90 | 0.123 |
| | 64QAM | 1 | 0 | 20.88 | 0.122 | 20.79 | 0.120 | 20.92 | 0.124 |
| | | 1 | 3 | 20.90 | 0.123 | 21.02 | 0.126 | 20.95 | 0.124 |
| | | 1 | 5 | 20.93 | 0.124 | 20.96 | 0.125 | 20.95 | 0.124 |
| | | 3 | 0 | 20.80 | 0.120 | **21.09** | **0.129** | 20.76 | 0.119 |
| | | 3 | 2 | 20.78 | 0.120 | 20.88 | 0.122 | 20.98 | 0.125 |
| | | 3 | 3 | 20.85 | 0.122 | 21.00 | 0.126 | 21.03 | 0.127 |
| | | 6 | 0 | 19.82 | 0.096 | 19.87 | 0.097 | 19.89 | 0.097 |
| | 256QAM | 1 | 0 | 17.86 | 0.061 | 17.91 | 0.062 | 17.87 | 0.061 |
| | | 1 | 3 | **18.03** | **0.064** | 17.80 | 0.060 | 17.88 | 0.061 |
| | | 1 | 5 | 17.88 | 0.061 | 17.72 | 0.059 | 17.86 | 0.061 |
| | | 3 | 0 | 17.83 | 0.061 | 17.73 | 0.059 | 17.96 | 0.063 |
| | | 3 | 2 | 17.82 | 0.061 | 17.89 | 0.062 | 18.01 | 0.063 |
| | | 3 | 3 | 17.31 | 0.054 | 17.95 | 0.062 | 17.99 | 0.063 |
| | | 6 | 0 | 17.81 | 0.060 | 17.66 | 0.058 | 17.77 | 0.060 |

| LTE Band 66/4 | | | | | | | | | |
|---|---|---|---|---|---|---|---|---|---|
| Bandwidth (MHz) | Modulation | RB Size | RB Offset | Conducted Output Power | | | | | |
| | | | | 131987 (1 711.5 MHz) | | 132322 (1 745.0 MHz) | | 132657 (1 778.5 MHz) | |
| | | | | (dBm) | (W) | (dBm) | (W) | (dBm) | (W) |
| 3 | QPSK | 1 | 0 | 22.77 | 0.189 | 22.72 | 0.187 | 22.75 | 0.188 |
| | | 1 | 7 | 22.78 | 0.190 | 22.74 | 0.188 | **22.93** | **0.196** |
| | | 1 | 14 | 22.66 | 0.185 | 22.69 | 0.186 | 22.82 | 0.191 |
| | | 8 | 0 | 21.80 | 0.151 | 21.72 | 0.149 | 21.81 | 0.152 |
| | | 8 | 4 | 21.84 | 0.153 | 21.73 | 0.149 | 21.78 | 0.151 |
| | | 8 | 7 | 21.81 | 0.152 | 21.79 | 0.151 | 21.83 | 0.152 |
| | | 15 | 0 | 21.82 | 0.152 | 21.75 | 0.150 | 21.74 | 0.149 |
| | 16QAM | 1 | 0 | 22.13 | 0.163 | 21.95 | 0.157 | 22.06 | 0.161 |
| | | 1 | 7 | **22.25** | **0.168** | 22.20 | 0.166 | 22.02 | 0.159 |
| | | 1 | 14 | 22.13 | 0.163 | 22.09 | 0.162 | 22.15 | 0.164 |
| | | 8 | 0 | 20.95 | 0.124 | 20.79 | 0.120 | 20.89 | 0.123 |
| | | 8 | 4 | 20.89 | 0.123 | 20.84 | 0.121 | 20.83 | 0.121 |
| | | 8 | 7 | 20.87 | 0.122 | 20.89 | 0.123 | 20.89 | 0.123 |
| | | 15 | 0 | 20.83 | 0.121 | 20.81 | 0.121 | 20.90 | 0.123 |
| | 64QAM | 1 | 0 | 21.05 | 0.127 | 20.99 | 0.126 | 20.97 | 0.125 |
| | | 1 | 7 | 21.00 | 0.126 | 20.94 | 0.124 | 20.98 | 0.125 |
| | | 1 | 14 | 20.85 | 0.122 | 20.95 | 0.124 | **21.09** | **0.129** |
| | | 8 | 0 | 19.92 | 0.098 | 19.80 | 0.095 | 19.84 | 0.096 |
| | | 8 | 4 | 19.86 | 0.097 | 19.72 | 0.094 | 19.88 | 0.097 |
| | | 8 | 7 | 19.88 | 0.097 | 19.96 | 0.099 | 19.82 | 0.096 |
| | | 15 | 0 | 19.80 | 0.095 | 19.80 | 0.095 | 19.80 | 0.095 |
| | 256QAM | 1 | 0 | 17.89 | 0.062 | 17.97 | 0.063 | 17.95 | 0.062 |
| | | 1 | 7 | 17.91 | 0.062 | 18.06 | 0.064 | 17.88 | 0.061 |
| | | 1 | 14 | 17.95 | 0.062 | 17.92 | 0.062 | **18.13** | **0.065** |
| | | 8 | 0 | 17.82 | 0.061 | 17.80 | 0.060 | 17.88 | 0.061 |
| | | 8 | 4 | 17.94 | 0.062 | 17.83 | 0.061 | 17.80 | 0.060 |
| | | 8 | 7 | 17.91 | 0.062 | 17.89 | 0.062 | 17.82 | 0.061 |
| | | 15 | 0 | 17.78 | 0.060 | 17.80 | 0.060 | 17.79 | 0.060 |

| LTE Band 66/4 | | | | | | | | | |
|---|---|---|---|---|---|---|---|---|---|
| Bandwidth (MHz) | Modulation | RB Size | RB Offset | Conducted Output Power | | | | | |
| | | | | 131997 (1 712.5 MHz) | | 132322 (1 745.0 MHz) | | 132647 (1 777.5 MHz) | |
| | | | | (dBm) | (W) | (dBm) | (W) | (dBm) | (W) |
| 5 | QPSK | 1 | 0 | 22.87 | 0.194 | 22.76 | 0.189 | 22.72 | 0.187 |
| | | 1 | 12 | 22.63 | 0.183 | 22.88 | 0.194 | 22.73 | 0.187 |
| | | 1 | 24 | 22.87 | 0.194 | 22.71 | 0.187 | **22.89** | **0.195** |
| | | 12 | 0 | 21.74 | 0.149 | 21.78 | 0.151 | 21.80 | 0.151 |
| | | 12 | 6 | 21.78 | 0.151 | 21.77 | 0.150 | 21.86 | 0.153 |
| | | 12 | 13 | 21.69 | 0.148 | 21.81 | 0.152 | 21.78 | 0.151 |
| | | 25 | 0 | 21.72 | 0.149 | 21.75 | 0.150 | 21.76 | 0.150 |
| | 16QAM | 1 | 0 | 21.76 | 0.150 | 21.98 | 0.158 | 21.96 | 0.157 |
| | | 1 | 12 | 21.97 | 0.157 | 22.05 | 0.160 | 22.09 | 0.162 |
| | | 1 | 24 | 21.98 | 0.158 | 22.08 | 0.161 | **22.27** | **0.169** |
| | | 12 | 0 | 20.83 | 0.121 | 20.84 | 0.121 | 20.80 | 0.120 |
| | | 12 | 6 | 20.76 | 0.119 | 20.86 | 0.122 | 20.95 | 0.124 |
| | | 12 | 13 | 20.74 | 0.119 | 20.87 | 0.122 | 20.88 | 0.122 |
| | | 25 | 0 | 20.78 | 0.120 | 20.72 | 0.118 | 20.81 | 0.121 |
| | 64QAM | 1 | 0 | 21.14 | 0.130 | 21.14 | 0.130 | 20.93 | 0.124 |
| | | 1 | 12 | **21.25** | **0.133** | 21.07 | 0.128 | 20.90 | 0.123 |
| | | 1 | 24 | 21.03 | 0.127 | 21.08 | 0.128 | 20.96 | 0.125 |
| | | 12 | 0 | 19.83 | 0.096 | 19.82 | 0.096 | 19.75 | 0.094 |
| | | 12 | 6 | 19.79 | 0.095 | 19.84 | 0.096 | 19.91 | 0.098 |
| | | 12 | 13 | 19.74 | 0.094 | 19.85 | 0.097 | 19.80 | 0.095 |
| | | 25 | 0 | 19.76 | 0.095 | 19.85 | 0.097 | 19.77 | 0.095 |
| | 256QAM | 1 | 0 | 17.84 | 0.061 | 18.00 | 0.063 | 17.89 | 0.062 |
| | | 1 | 12 | 17.92 | 0.062 | 17.81 | 0.060 | **18.08** | **0.064** |
| | | 1 | 24 | 17.74 | 0.059 | 17.98 | 0.063 | 17.79 | 0.060 |
| | | 12 | 0 | 17.84 | 0.061 | 17.75 | 0.060 | 17.82 | 0.061 |
| | | 12 | 6 | 17.93 | 0.062 | 17.89 | 0.062 | 17.86 | 0.061 |
| | | 12 | 13 | 17.83 | 0.061 | 17.87 | 0.061 | 17.72 | 0.059 |
| | | 25 | 0 | 17.78 | 0.060 | 17.86 | 0.061 | 17.74 | 0.059 |

| LTE Band 66/4 | | | | | | | | | |
|---|---|---|---|---|---|---|---|---|---|
| Bandwidth (MHz) | Modulation | RB Size | RB Offset | Conducted Output Power | | | | | |
| | | | | 132022 (1 715.0 MHz) | | 132322 (1 745.0 MHz) | | 132622 (1 775.0 MHz) | |
| | | | | (dBm) | (W) | (dBm) | (W) | (dBm) | (W) |
| 10 | QPSK | 1 | 0 | 22.81 | 0.191 | 22.74 | 0.188 | 22.68 | 0.185 |
| | | 1 | 25 | 22.72 | 0.187 | 22.82 | 0.191 | **22.90** | **0.195** |
| | | 1 | 49 | 22.71 | 0.187 | 22.78 | 0.190 | 22.80 | 0.191 |
| | | 25 | 0 | 21.69 | 0.148 | 21.83 | 0.152 | 21.76 | 0.150 |
| | | 25 | 12 | 21.77 | 0.150 | 21.81 | 0.152 | 21.78 | 0.151 |
| | | 25 | 25 | 21.68 | 0.147 | 21.82 | 0.152 | 21.75 | 0.150 |
| | | 50 | 0 | 21.79 | 0.151 | 21.73 | 0.149 | 21.79 | 0.151 |
| | 16QAM | 1 | 0 | 22.13 | 0.163 | 22.25 | 0.168 | 22.11 | 0.163 |
| | | 1 | 25 | 22.06 | 0.161 | 22.14 | 0.164 | 22.06 | 0.161 |
| | | 1 | 49 | 22.07 | 0.161 | 22.17 | 0.165 | **22.35** | **0.172** |
| | | 25 | 0 | 20.75 | 0.119 | 20.87 | 0.122 | 20.81 | 0.121 |
| | | 25 | 12 | 20.82 | 0.121 | 20.89 | 0.123 | 20.85 | 0.122 |
| | | 25 | 25 | 20.79 | 0.120 | 20.88 | 0.122 | 20.84 | 0.121 |
| | | 50 | 0 | 20.82 | 0.121 | 20.87 | 0.122 | 20.94 | 0.124 |
| | 64QAM | 1 | 0 | 20.96 | 0.125 | 20.99 | 0.126 | 21.05 | 0.127 |
| | | 1 | 25 | 21.32 | 0.136 | 21.04 | 0.127 | 21.17 | 0.131 |
| | | 1 | 49 | 21.08 | 0.128 | 21.10 | 0.129 | **21.57** | **0.144** |
| | | 25 | 0 | 19.71 | 0.094 | 19.82 | 0.096 | 19.83 | 0.096 |
| | | 25 | 12 | 19.84 | 0.096 | 19.84 | 0.096 | 19.81 | 0.096 |
| | | 25 | 25 | 19.78 | 0.095 | 19.87 | 0.097 | 19.9 | 0.098 |
| | | 50 | 0 | 19.82 | 0.096 | 19.87 | 0.097 | 19.96 | 0.099 |
| | 256QAM | 1 | 0 | 17.93 | 0.062 | 18.00 | 0.063 | **18.06** | **0.064** |
| | | 1 | 25 | 17.98 | 0.063 | 17.92 | 0.062 | 17.94 | 0.062 |
| | | 1 | 49 | 18.00 | 0.063 | 18.04 | 0.064 | 18.03 | 0.064 |
| | | 25 | 0 | 17.95 | 0.062 | 17.95 | 0.062 | 17.88 | 0.061 |
| | | 25 | 12 | 17.93 | 0.062 | 17.84 | 0.061 | 17.95 | 0.062 |
| | | 25 | 25 | 17.93 | 0.062 | 17.91 | 0.062 | 17.97 | 0.063 |
| | | 50 | 0 | 17.94 | 0.062 | 17.83 | 0.061 | 17.92 | 0.062 |

| LTE Band 66/4 | | | | | | | | | |
|---|---|---|---|---|---|---|---|---|---|
| Bandwidth (MHz) | Modulation | RB Size | RB Offset | Conducted Output Power | | | | | |
| | | | | 132047 (1 717.5 MHz) | | 132322 (1 745.0 MHz) | | 132597 (1 772.5 MHz) | |
| | | | | (dBm) | (W) | (dBm) | (W) | (dBm) | (W) |
| 15 | QPSK | 1 | 0 | **22.90** | **0.195** | 22.81 | 0.191 | 22.72 | 0.187 |
| | | 1 | 36 | 22.78 | 0.190 | 22.73 | 0.187 | 22.77 | 0.189 |
| | | 1 | 74 | 22.69 | 0.186 | 22.85 | 0.193 | 22.89 | 0.195 |
| | | 36 | 0 | 21.62 | 0.145 | 21.82 | 0.152 | 21.78 | 0.151 |
| | | 36 | 18 | 21.75 | 0.150 | 21.80 | 0.151 | 21.86 | 0.153 |
| | | 36 | 37 | 21.76 | 0.150 | 21.78 | 0.151 | 21.85 | 0.153 |
| | | 75 | 0 | 21.72 | 0.149 | 21.79 | 0.151 | 21.92 | 0.156 |
| | 16QAM | 1 | 0 | 22.01 | 0.159 | 21.93 | 0.156 | 22.23 | 0.167 |
| | | 1 | 36 | 21.99 | 0.158 | 21.80 | 0.151 | **22.35** | **0.172** |
| | | 1 | 74 | 22.09 | 0.162 | 22.00 | 0.158 | 22.08 | 0.161 |
| | | 36 | 0 | 20.68 | 0.117 | 20.96 | 0.125 | 20.86 | 0.122 |
| | | 36 | 18 | 20.77 | 0.119 | 20.81 | 0.121 | 20.91 | 0.123 |
| | | 36 | 37 | 20.80 | 0.120 | 20.8 | 0.120 | 20.83 | 0.121 |
| | | 75 | 0 | 20.72 | 0.118 | 20.76 | 0.119 | 20.84 | 0.121 |
| | 64QAM | 1 | 0 | 21.02 | 0.126 | 20.92 | 0.124 | 21.10 | 0.129 |
| | | 1 | 36 | 21.07 | 0.128 | 20.99 | 0.126 | 21.05 | 0.127 |
| | | 1 | 74 | **21.21** | **0.132** | 20.96 | 0.125 | 21.09 | 0.129 |
| | | 36 | 0 | 19.71 | 0.094 | 19.878 | 0.097 | 19.84 | 0.096 |
| | | 36 | 18 | 19.72 | 0.094 | 19.91 | 0.098 | 19.92 | 0.098 |
| | | 36 | 37 | 19.74 | 0.094 | 19.81 | 0.096 | 19.82 | 0.096 |
| | | 75 | 0 | 19.75 | 0.094 | 19.83 | 0.096 | 19.82 | 0.096 |
| | 256QAM | 1 | 0 | 17.84 | 0.061 | 17.87 | 0.061 | 17.93 | 0.062 |
| | | 1 | 36 | 17.72 | 0.059 | 17.89 | 0.062 | 17.92 | 0.062 |
| | | 1 | 74 | 17.91 | 0.062 | 17.89 | 0.062 | 17.91 | 0.062 |
| | | 36 | 0 | **18.00** | **0.063** | 17.94 | 0.062 | 17.79 | 0.060 |
| | | 36 | 18 | 17.90 | 0.062 | 17.88 | 0.061 | 17.87 | 0.061 |
| | | 36 | 37 | 17.92 | 0.062 | 17.91 | 0.062 | 17.81 | 0.060 |
| | | 75 | 0 | 17.81 | 0.060 | 17.84 | 0.061 | 17.79 | 0.060 |

| LTE Band 66/4 | | | | | | | | | |
|---|---|---|---|---|---|---|---|---|---|
| Bandwidth (MHz) | Modulation | RB Size | RB Offset | Conducted Output Power | | | | | |
| | | | | 132072 (1 720.0 MHz) | | 132322 (1 745.0 MHz) | | 132572 (1 777.0 MHz) | |
| | | | | (dBm) | (W) | (dBm) | (W) | (dBm) | (W) |
| 20 | QPSK | 1 | 0 | 22.60 | 0.182 | 22.59 | 0.182 | 22.72 | 0.187 |
| | | 1 | 50 | 22.89 | 0.195 | 22.73 | 0.187 | 22.82 | 0.191 |
| | | 1 | 99 | 23.00 | 0.200 | **23.12** | **0.205** | 23.04 | 0.201 |
| | | 50 | 0 | 21.75 | 0.150 | 21.87 | 0.154 | 21.84 | 0.153 |
| | | 50 | 25 | 21.78 | 0.151 | 21.83 | 0.152 | 21.86 | 0.153 |
| | | 50 | 50 | 21.72 | 0.149 | 21.85 | 0.153 | 21.82 | 0.152 |
| | | 100 | 0 | 21.85 | 0.153 | 21.78 | 0.151 | 21.78 | 0.151 |
| | 16QAM | 1 | 0 | 22.02 | 0.159 | 22.03 | 0.160 | 22.01 | 0.159 |
| | | 1 | 50 | 21.92 | 0.156 | 22.05 | 0.160 | **22.10** | **0.162** |
| | | 1 | 99 | 22.04 | 0.160 | 22.00 | 0.158 | 22.03 | 0.160 |
| | | 50 | 0 | 20.74 | 0.119 | 20.86 | 0.122 | 20.86 | 0.122 |
| | | 50 | 25 | 20.73 | 0.118 | 20.88 | 0.122 | 20.84 | 0.121 |
| | | 50 | 50 | 20.75 | 0.119 | 20.79 | 0.120 | 20.81 | 0.121 |
| | | 100 | 0 | 20.87 | 0.122 | 20.73 | 0.118 | 20.88 | 0.122 |
| | 64QAM | 1 | 0 | 20.95 | 0.124 | 21.05 | 0.127 | 21.00 | 0.126 |
| | | 1 | 50 | 21.01 | 0.126 | 20.95 | 0.124 | **21.08** | **0.128** |
| | | 1 | 99 | 20.96 | 0.125 | 20.95 | 0.124 | 20.94 | 0.124 |
| | | 50 | 0 | 19.69 | 0.093 | 19.93 | 0.098 | 19.85 | 0.097 |
| | | 50 | 25 | 19.77 | 0.095 | 19.95 | 0.099 | 19.87 | 0.097 |
| | | 50 | 50 | 19.71 | 0.094 | 19.92 | 0.098 | 19.82 | 0.096 |
| | | 100 | 0 | 19.88 | 0.097 | 19.98 | 0.100 | 19.92 | 0.098 |
| | 256QAM | 1 | 0 | 18.01 | 0.063 | 17.99 | 0.063 | 17.86 | 0.061 |
| | | 1 | 50 | 18.13 | 0.065 | 18.22 | 0.066 | **18.23** | **0.067** |
| | | 1 | 99 | 17.98 | 0.063 | 17.98 | 0.063 | 18.00 | 0.063 |
| | | 50 | 0 | 17.85 | 0.061 | 17.87 | 0.061 | 17.90 | 0.062 |
| | | 50 | 25 | 17.83 | 0.061 | 17.85 | 0.061 | 17.88 | 0.061 |
| | | 50 | 50 | 17.47 | 0.056 | 17.31 | 0.054 | 17.46 | 0.056 |
| | | 100 | 0 | 18.00 | 0.063 | 17.82 | 0.061 | 17.82 | 0.061 |

| LTE Band 26/5_part 22 | | | | | | | | | |
|---|---|---|---|---|---|---|---|---|---|
| Bandwidth (MHz) | Modulation | RB Size | RB Offset | Conducted Output Power | | | | | |
| | | | | 26805 (824.7 MHz) | | 26915 (836.5 MHz) | | 27033 (848.3 MHz) | |
| | | | | (dBm) | (W) | (dBm) | (W) | (dBm) | (W) |
| 1.4 | QPSK | 1 | 0 | 23.22 | 0.210 | **23.38** | **0.218** | 23.19 | 0.208 |
| | | 1 | 3 | 23.31 | 0.214 | 23.31 | 0.214 | 23.23 | 0.210 |
| | | 1 | 5 | 23.26 | 0.212 | 23.28 | 0.213 | 23.19 | 0.208 |
| | | 3 | 0 | 23.33 | 0.215 | 23.28 | 0.213 | 23.26 | 0.212 |
| | | 3 | 2 | 23.31 | 0.214 | 23.26 | 0.212 | 23.25 | 0.211 |
| | | 3 | 3 | 23.30 | 0.214 | 23.29 | 0.213 | 23.24 | 0.211 |
| | | 6 | 0 | 22.32 | 0.171 | 22.31 | 0.170 | 23.24 | 0.211 |
| | 16QAM | 1 | 0 | 22.47 | 0.177 | 22.41 | 0.174 | 22.52 | 0.179 |
| | | 1 | 3 | 22.51 | 0.178 | 22.47 | 0.177 | 22.53 | 0.179 |
| | | 1 | 5 | 22.53 | 0.179 | 22.43 | 0.175 | 22.53 | 0.179 |
| | | 3 | 0 | 22.43 | 0.175 | 22.48 | 0.177 | **22.58** | **0.181** |
| | | 3 | 2 | 22.48 | 0.177 | 22.42 | 0.175 | 22.56 | 0.180 |
| | | 3 | 3 | 22.45 | 0.176 | 22.46 | 0.176 | 22.45 | 0.176 |
| | | 6 | 0 | 21.37 | 0.137 | 21.38 | 0.137 | 22.54 | 0.179 |
| | 64QAM | 1 | 0 | 21.41 | 0.138 | 21.43 | 0.139 | **21.48** | **0.141** |
| | | 1 | 3 | 21.47 | 0.140 | 21.46 | 0.140 | 21.40 | 0.138 |
| | | 1 | 5 | 21.46 | 0.140 | 21.39 | 0.138 | 21.39 | 0.138 |
| | | 3 | 0 | 21.43 | 0.139 | 21.36 | 0.137 | 21.29 | 0.135 |
| | | 3 | 2 | 21.39 | 0.138 | 21.38 | 0.137 | 21.37 | 0.137 |
| | | 3 | 3 | 21.42 | 0.139 | 21.37 | 0.137 | 21.51 | 0.142 |
| | | 6 | 0 | 20.38 | 0.109 | 20.32 | 0.108 | 21.38 | 0.137 |
| | 256QAM | 1 | 0 | 18.49 | 0.071 | 18.41 | 0.069 | 18.56 | 0.072 |
| | | 1 | 3 | 18.46 | 0.070 | 18.43 | 0.070 | 18.42 | 0.070 |
| | | 1 | 5 | 18.44 | 0.070 | 18.41 | 0.069 | 18.49 | 0.071 |
| | | 3 | 0 | 18.44 | 0.070 | 18.38 | 0.069 | 18.37 | 0.069 |
| | | 3 | 2 | 18.40 | 0.069 | 18.37 | 0.069 | 18.45 | 0.070 |
| | | 3 | 3 | 18.46 | 0.070 | 18.37 | 0.069 | **18.62** | **0.073** |
| | | 6 | 0 | 18.37 | 0.069 | 18.31 | 0.068 | 18.54 | 0.071 |

| LTE Band 26/5_part 22 | | | | | | | | | |
|---|---|---|---|---|---|---|---|---|---|
| Bandwidth (MHz) | Modulation | RB Size | RB Offset | Conducted Output Power | | | | | |
| | | | | 26805 (825.5 MHz) | | 26915 (836.5 MHz) | | 27025 (847.5 MHz) | |
| | | | | (dBm) | (W) | (dBm) | (W) | (dBm) | (W) |
| 3 | QPSK | 1 | 0 | 23.36 | 0.217 | 23.34 | 0.216 | 23.16 | 0.207 |
| | | 1 | 7 | **23.43** | **0.220** | 23.42 | 0.220 | 23.25 | 0.211 |
| | | 1 | 14 | 23.37 | 0.217 | 23.34 | 0.216 | 23.22 | 0.210 |
| | | 8 | 0 | 22.49 | 0.177 | 22.45 | 0.176 | 22.10 | 0.162 |
| | | 8 | 4 | 22.56 | 0.180 | 22.42 | 0.175 | 22.11 | 0.163 |
| | | 8 | 7 | 22.50 | 0.178 | 22.45 | 0.176 | 22.11 | 0.163 |
| | | 15 | 0 | 22.47 | 0.177 | 22.36 | 0.172 | 22.13 | 0.163 |
| | 16QAM | 1 | 0 | 22.68 | 0.185 | 22.71 | 0.187 | 22.41 | 0.174 |
| | | 1 | 7 | **22.72** | **0.187** | 22.68 | 0.185 | 22.54 | 0.179 |
| | | 1 | 14 | 22.64 | 0.184 | 22.67 | 0.185 | 22.61 | 0.182 |
| | | 8 | 0 | 21.49 | 0.141 | 21.42 | 0.139 | 21.12 | 0.129 |
| | | 8 | 4 | 21.52 | 0.142 | 21.43 | 0.139 | 21.17 | 0.131 |
| | | 8 | 7 | 21.54 | 0.143 | 21.50 | 0.141 | 21.14 | 0.130 |
| | | 15 | 0 | 21.51 | 0.142 | 21.49 | 0.141 | 21.19 | 0.132 |
| | 64QAM | 1 | 0 | 21.46 | 0.140 | 21.52 | 0.142 | 21.38 | 0.137 |
| | | 1 | 7 | **21.71** | **0.148** | 21.56 | 0.143 | 21.32 | 0.136 |
| | | 1 | 14 | 21.57 | 0.144 | 21.48 | 0.141 | 21.41 | 0.138 |
| | | 8 | 0 | 20.45 | 0.111 | 20.38 | 0.109 | 20.12 | 0.103 |
| | | 8 | 4 | 20.52 | 0.113 | 20.30 | 0.107 | 20.06 | 0.101 |
| | | 8 | 7 | 20.43 | 0.110 | 20.34 | 0.108 | 20.12 | 0.103 |
| | | 15 | 0 | 20.46 | 0.111 | 20.32 | 0.108 | 20.17 | 0.104 |
| | 256QAM | 1 | 0 | 18.44 | 0.070 | 18.44 | 0.070 | 18.97 | 0.079 |
| | | 1 | 7 | 18.52 | 0.071 | 18.53 | 0.071 | 18.94 | 0.078 |
| | | 1 | 14 | 18.54 | 0.071 | 18.40 | 0.069 | **19.30** | **0.085** |
| | | 8 | 0 | 18.43 | 0.070 | 18.35 | 0.068 | 18.96 | 0.079 |
| | | 8 | 4 | 18.52 | 0.071 | 18.36 | 0.069 | 18.96 | 0.079 |
| | | 8 | 7 | 18.42 | 0.070 | 18.38 | 0.069 | 18.91 | 0.078 |
| | | 15 | 0 | 18.51 | 0.071 | 18.34 | 0.068 | 18.92 | 0.078 |

| LTE Band 26/5_part 22 | | | | | | | | | |
|---|---|---|---|---|---|---|---|---|---|
| Bandwidth (㎒) | Modulation | RB Size | RB Offset | Conducted Output Power | | | | | |
| | | | | 26815 (826.5 ㎒) | | 26915 (836.5 ㎒) | | 27015 (846.5 ㎒) | |
| | | | | (dBm) | (W) | (dBm) | (W) | (dBm) | (W) |
| 5 | QPSK | 1 | 0 | 23.31 | 0.214 | 23.32 | 0.215 | 23.12 | 0.205 |
| | | 1 | 12 | **23.36** | **0.217** | 23.35 | 0.216 | 23.13 | 0.206 |
| | | 1 | 24 | 23.32 | 0.215 | 23.31 | 0.214 | 23.13 | 0.206 |
| | | 12 | 0 | 22.37 | 0.173 | 22.37 | 0.173 | 22.13 | 0.163 |
| | | 12 | 6 | 22.46 | 0.176 | 22.42 | 0.175 | 22.16 | 0.164 |
| | | 12 | 13 | 22.31 | 0.170 | 22.34 | 0.171 | 22.18 | 0.165 |
| | | 25 | 0 | 22.36 | 0.172 | 22.35 | 0.172 | 22.10 | 0.162 |
| | 16QAM | 1 | 0 | 22.34 | 0.171 | 22.56 | 0.180 | 22.59 | 0.182 |
| | | 1 | 12 | 22.52 | 0.179 | **22.81** | **0.191** | 22.71 | 0.187 |
| | | 1 | 24 | 22.34 | 0.171 | 22.55 | 0.180 | 22.56 | 0.180 |
| | | 12 | 0 | 21.32 | 0.136 | 21.41 | 0.138 | 21.20 | 0.132 |
| | | 12 | 6 | 21.44 | 0.139 | 21.46 | 0.140 | 21.18 | 0.131 |
| | | 12 | 13 | 21.36 | 0.137 | 21.38 | 0.137 | 21.24 | 0.133 |
| | | 25 | 0 | 21.39 | 0.138 | 21.33 | 0.136 | 21.15 | 0.130 |
| | 64QAM | 1 | 0 | 21.46 | 0.140 | 21.51 | 0.142 | 21.46 | 0.140 |
| | | 1 | 12 | 21.55 | 0.143 | **21.56** | **0.143** | 21.33 | 0.136 |
| | | 1 | 24 | 21.43 | 0.139 | 21.46 | 0.140 | 21.18 | 0.131 |
| | | 12 | 0 | 20.36 | 0.109 | 20.41 | 0.110 | 20.17 | 0.104 |
| | | 12 | 6 | 20.47 | 0.111 | 20.49 | 0.112 | 20.26 | 0.106 |
| | | 12 | 13 | 20.40 | 0.110 | 20.38 | 0.109 | 20.21 | 0.105 |
| | | 25 | 0 | 20.41 | 0.110 | 20.34 | 0.108 | 20.15 | 0.104 |
| | 256QAM | 1 | 0 | 18.31 | 0.068 | 18.38 | 0.069 | 18.75 | 0.075 |
| | | 1 | 12 | 18.38 | 0.069 | 18.35 | 0.068 | **19.01** | **0.080** |
| | | 1 | 24 | 18.35 | 0.068 | 18.29 | 0.067 | 18.88 | 0.077 |
| | | 12 | 0 | 18.34 | 0.068 | 18.37 | 0.069 | 18.90 | 0.078 |
| | | 12 | 6 | 18.37 | 0.069 | 18.33 | 0.068 | 18.94 | 0.078 |
| | | 12 | 13 | 18.29 | 0.067 | 18.31 | 0.068 | 18.91 | 0.078 |
| | | 25 | 0 | 18.38 | 0.069 | 18.39 | 0.069 | 18.91 | 0.078 |

| LTE Band 26/5_part 22 | | | | | | | | | |
|---|---|---|---|---|---|---|---|---|---|
| Bandwidth (㎒) | Modulation | RB Size | RB Offset | Conducted Output Power | | | | | |
| | | | | 26840 (829.0 ㎒) | | 26915 (836.5 ㎒) | | 26990 (844.0 ㎒) | |
| | | | | (dBm) | (W) | (dBm) | (W) | (dBm) | (W) |
| 10 | QPSK | 1 | 0 | 23.33 | 0.215 | **23.41** | **0.219** | 23.26 | 0.212 |
| | | 1 | 25 | 23.34 | 0.216 | 23.38 | 0.218 | 23.23 | 0.210 |
| | | 1 | 49 | 23.30 | 0.214 | 23.31 | 0.214 | 23.22 | 0.210 |
| | | 25 | 0 | 22.36 | 0.172 | 22.51 | 0.178 | 23.23 | 0.210 |
| | | 25 | 12 | 22.31 | 0.170 | 22.41 | 0.174 | 23.26 | 0.212 |
| | | 25 | 25 | 22.39 | 0.173 | 22.42 | 0.175 | 23.27 | 0.212 |
| | | 50 | 0 | 22.38 | 0.173 | 22.38 | 0.173 | 22.24 | 0.167 |
| | 16QAM | 1 | 0 | 22.48 | 0.177 | 22.58 | 0.181 | 22.47 | 0.177 |
| | | 1 | 25 | 22.51 | 0.178 | **22.62** | **0.183** | 22.43 | 0.175 |
| | | 1 | 49 | 22.46 | 0.176 | 22.57 | 0.181 | 22.54 | 0.179 |
| | | 25 | 0 | 21.41 | 0.138 | 21.46 | 0.140 | 22.32 | 0.171 |
| | | 25 | 12 | 21.43 | 0.139 | 21.43 | 0.139 | 22.34 | 0.171 |
| | | 25 | 25 | 21.39 | 0.138 | 21.49 | 0.141 | 22.28 | 0.169 |
| | | 50 | 0 | 21.37 | 0.137 | 21.43 | 0.139 | 21.26 | 0.134 |
| | 64QAM | 1 | 0 | 21.52 | 0.142 | 21.52 | 0.142 | 21.43 | 0.139 |
| | | 1 | 25 | 21.54 | 0.143 | **21.58** | **0.144** | 21.52 | 0.142 |
| | | 1 | 49 | 21.49 | 0.141 | 21.49 | 0.141 | 21.25 | 0.133 |
| | | 25 | 0 | 20.47 | 0.111 | 20.46 | 0.111 | 21.34 | 0.136 |
| | | 25 | 12 | 20.45 | 0.111 | 20.42 | 0.110 | 21.25 | 0.133 |
| | | 25 | 25 | 20.46 | 0.111 | 20.34 | 0.108 | 21.26 | 0.134 |
| | | 50 | 0 | 20.41 | 0.110 | 20.38 | 0.109 | 20.22 | 0.105 |
| | 256QAM | 1 | 0 | 18.51 | 0.071 | 18.51 | 0.071 | **18.96** | **0.079** |
| | | 1 | 25 | 18.43 | 0.070 | 18.48 | 0.070 | 18.80 | 0.076 |
| | | 1 | 49 | 18.46 | 0.070 | 18.46 | 0.070 | 18.77 | 0.075 |
| | | 25 | 0 | 18.38 | 0.069 | 18.45 | 0.070 | 18.76 | 0.075 |
| | | 25 | 12 | 18.39 | 0.069 | 18.47 | 0.070 | 18.85 | 0.077 |
| | | 25 | 25 | 18.40 | 0.069 | 18.41 | 0.069 | 18.79 | 0.076 |
| | | 50 | 0 | 18.41 | 0.069 | 18.43 | 0.070 | 17.87 | 0.061 |

| LTE Band 26_part 22 | | | | | | | | | |
|---|---|---|---|---|---|---|---|---|---|
| Bandwidth (㎒) | Modulation | RB Size | RB Offset | Conducted Output Power | | | | | |
| | | | | 26865 (831.5 ㎒) | | | | 26965 (841.5 ㎒) | |
| | | | | (dBm) | (W) | | | (W) | (W) |
| 15 | QPSK | 1 | 0 | 23.35 | 0.216 | - | - | 23.10 | 0.204 |
| | | 1 | 36 | **23.54** | **0.226** | - | - | 23.17 | 0.207 |
| | | 1 | 74 | 23.32 | 0.215 | - | - | 23.14 | 0.206 |
| | | 36 | 0 | 22.38 | 0.173 | - | - | 22.38 | 0.173 |
| | | 36 | 18 | 22.35 | 0.172 | - | - | 22.36 | 0.172 |
| | | 36 | 37 | 22.37 | 0.173 | - | - | 22.41 | 0.174 |
| | | 75 | 0 | 22.34 | 0.171 | - | - | 22.23 | 0.167 |
| | 16QAM | 1 | 0 | **22.58** | **0.181** | - | - | 22.39 | 0.173 |
| | | 1 | 36 | 22.54 | 0.179 | - | - | 22.38 | 0.173 |
| | | 1 | 74 | 22.51 | 0.178 | - | - | 22.54 | 0.179 |
| | | 36 | 0 | 21.43 | 0.139 | - | - | 21.42 | 0.139 |
| | | 36 | 18 | 21.35 | 0.136 | - | - | 21.38 | 0.137 |
| | | 36 | 37 | 21.39 | 0.138 | - | - | 21.34 | 0.136 |
| | | 75 | 0 | 21.33 | 0.136 | - | - | 21.43 | 0.139 |
| | 64QAM | 1 | 0 | 21.48 | 0.141 | - | - | 21.49 | 0.141 |
| | | 1 | 36 | **21.59** | **0.144** | - | - | 21.35 | 0.136 |
| | | 1 | 74 | 21.54 | 0.143 | - | - | 21.40 | 0.138 |
| | | 36 | 0 | 20.39 | 0.109 | - | - | 20.42 | 0.110 |
| | | 36 | 18 | 20.36 | 0.109 | - | - | 20.35 | 0.108 |
| | | 36 | 37 | 20.34 | 0.108 | - | - | 20.41 | 0.110 |
| | | 75 | 0 | 20.33 | 0.108 | - | - | 20.45 | 0.111 |
| | 256QAM | 1 | 0 | 18.44 | 0.070 | - | - | 18.79 | 0.076 |
| | | 1 | 36 | 18.47 | 0.070 | - | - | **18.87** | **0.077** |
| | | 1 | 74 | 18.43 | 0.070 | - | - | 18.78 | 0.076 |
| | | 36 | 0 | 18.46 | 0.070 | - | - | 18.77 | 0.075 |
| | | 36 | 18 | 18.41 | 0.069 | - | - | 18.83 | 0.076 |
| | | 36 | 37 | 18.43 | 0.070 | - | - | 18.83 | 0.076 |
| | | 75 | 0 | 18.42 | 0.070 | - | - | 18.43 | 0.070 |

| LTE Band 7 | | | | | | | | | |
|---|---|---|---|---|---|---|---|---|---|
| Bandwidth (㎒) | Modulation | RB Size | RB Offset | Conducted Output Power | | | | | |
| | | | | 20775 (2 502.5 ㎒) | | 21100 (2 535.0 ㎒) | | 21425 (2 567.5 ㎒) | |
| | | | | (dBm) | (W) | (dBm) | (W) | (dBm) | (W) |
| 5 | QPSK | 1 | 0 | 22.58 | 0.181 | 22.70 | 0.186 | 23.20 | 0.209 |
| | | 1 | 12 | 22.59 | 0.182 | 22.66 | 0.185 | **23.29** | **0.213** |
| | | 1 | 24 | 22.68 | 0.185 | 22.67 | 0.185 | 22.87 | 0.194 |
| | | 12 | 0 | 21.89 | 0.155 | 21.78 | 0.151 | 22.45 | 0.176 |
| | | 12 | 6 | 21.73 | 0.149 | 21.76 | 0.150 | 22.43 | 0.175 |
| | | 12 | 13 | 21.72 | 0.149 | 21.78 | 0.151 | 22.21 | 0.166 |
| | | 25 | 0 | 21.82 | 0.152 | 21.82 | 0.152 | 22.11 | 0.163 |
| | 16QAM | 1 | 0 | 22.03 | 0.160 | 22.02 | 0.159 | 22.00 | 0.158 |
| | | 1 | 12 | 21.75 | 0.150 | **22.27** | **0.169** | 22.18 | 0.165 |
| | | 1 | 24 | 21.74 | 0.149 | 22.07 | 0.161 | 22.00 | 0.158 |
| | | 12 | 0 | 20.83 | 0.121 | 20.77 | 0.119 | 21.94 | 0.156 |
| | | 12 | 6 | 20.84 | 0.121 | 20.83 | 0.121 | 22.10 | 0.162 |
| | | 12 | 13 | 20.74 | 0.119 | 20.84 | 0.121 | 22.09 | 0.162 |
| | | 25 | 0 | 20.84 | 0.121 | 20.82 | 0.121 | 21.89 | 0.155 |
| | 64QAM | 1 | 0 | 20.44 | 0.111 | 20.66 | 0.116 | **21.16** | **0.131** |
| | | 1 | 12 | 20.81 | 0.121 | 21.07 | 0.128 | 21.11 | 0.129 |
| | | 1 | 24 | 21.03 | 0.127 | 20.92 | 0.124 | 21.10 | 0.129 |
| | | 12 | 0 | 19.92 | 0.098 | 19.81 | 0.096 | 20.91 | 0.123 |
| | | 12 | 6 | 19.84 | 0.096 | 19.74 | 0.094 | 21.04 | 0.127 |
| | | 12 | 13 | 19.78 | 0.095 | 19.87 | 0.097 | 21.10 | 0.129 |
| | | 25 | 0 | 19.84 | 0.096 | 19.84 | 0.096 | 20.01 | 0.100 |
| | 256QAM | 1 | 0 | 17.70 | 0.059 | 18.13 | 0.065 | 18.16 | 0.065 |
| | | 1 | 12 | 17.91 | 0.062 | 17.78 | 0.060 | 17.81 | 0.060 |
| | | 1 | 24 | 17.87 | 0.061 | 17.86 | 0.061 | 17.85 | 0.061 |
| | | 12 | 0 | 17.80 | 0.060 | 17.85 | 0.061 | 17.92 | 0.062 |
| | | 12 | 6 | 17.96 | 0.063 | 18.00 | 0.063 | 18.10 | 0.065 |
| | | 12 | 13 | 17.86 | 0.061 | 17.88 | 0.061 | 18.12 | 0.065 |
| | | 25 | 0 | 17.77 | 0.060 | 17.74 | 0.059 | **18.51** | **0.071** |

| LTE Band 7 | | | | | | | | | |
|---|---|---|---|---|---|---|---|---|---|
| Bandwidth (㎒) | Modulation | RB Size | RB Offset | Conducted Output Power | | | | | |
| | | | | 20800 (2 505.0 ㎒) | | 21100 (2 535.0 ㎒) | | 21400 (2 565.0 ㎒) | |
| | | | | (dBm) | (W) | (dBm) | (W) | (dBm) | (W) |
| 10 | QPSK | 1 | 0 | 23.29 | 0.213 | 22.66 | 0.185 | 23.26 | 0.212 |
| | | 1 | 25 | 23.17 | 0.207 | 22.72 | 0.187 | 22.94 | 0.197 |
| | | 1 | 49 | 22.70 | 0.186 | 23.10 | 0.204 | **23.32** | **0.215** |
| | | 25 | 0 | 22.59 | 0.182 | 21.85 | 0.153 | 22.06 | 0.161 |
| | | 25 | 12 | 22.59 | 0.182 | 21.85 | 0.153 | 22.03 | 0.160 |
| | | 25 | 25 | 22.49 | 0.177 | 22.05 | 0.160 | 22.03 | 0.160 |
| | | 50 | 0 | 22.04 | 0.160 | 21.77 | 0.150 | 22.12 | 0.163 |
| | 16QAM | 1 | 0 | 22.09 | 0.162 | 21.76 | 0.150 | 22.18 | 0.165 |
| | | 1 | 25 | 22.16 | 0.164 | 21.93 | 0.156 | 22.11 | 0.163 |
| | | 1 | 49 | **22.25** | **0.168** | 22.05 | 0.160 | 22.14 | 0.164 |
| | | 25 | 0 | 21.54 | 0.143 | 20.92 | 0.124 | 21.13 | 0.130 |
| | | 25 | 12 | 21.64 | 0.146 | 20.91 | 0.123 | 21.20 | 0.132 |
| | | 25 | 25 | 21.68 | 0.147 | 20.97 | 0.125 | 21.10 | 0.129 |
| | | 50 | 0 | 20.77 | 0.119 | 20.89 | 0.123 | 21.09 | 0.129 |
| | 64QAM | 1 | 0 | 20.97 | 0.125 | 21.06 | 0.128 | 21.31 | 0.135 |
| | | 1 | 25 | 20.88 | 0.122 | 21.08 | 0.128 | **21.43** | **0.139** |
| | | 1 | 49 | 21.15 | 0.130 | 20.95 | 0.124 | 21.06 | 0.128 |
| | | 25 | 0 | 20.77 | 0.119 | 19.97 | 0.099 | 20.19 | 0.104 |
| | | 25 | 12 | 20.82 | 0.121 | 19.89 | 0.097 | 20.17 | 0.104 |
| | | 25 | 25 | 20.92 | 0.124 | 19.91 | 0.098 | 20.14 | 0.103 |
| | | 50 | 0 | 19.84 | 0.096 | 19.88 | 0.097 | 20.15 | 0.104 |
| | 256QAM | 1 | 0 | 17.99 | 0.063 | **18.17** | **0.066** | 18.14 | 0.065 |
| | | 1 | 25 | 17.83 | 0.061 | 17.78 | 0.060 | 18.15 | 0.065 |
| | | 1 | 49 | 18.13 | 0.065 | 17.62 | 0.058 | 18.15 | 0.065 |
| | | 25 | 0 | 17.85 | 0.061 | 17.95 | 0.062 | 18.12 | 0.065 |
| | | 25 | 12 | 17.92 | 0.062 | 17.90 | 0.062 | 18.12 | 0.065 |
| | | 25 | 25 | 17.95 | 0.062 | 17.83 | 0.061 | 18.11 | 0.065 |
| | | 50 | 0 | 17.85 | 0.061 | 17.84 | 0.061 | 18.11 | 0.065 |

| LTE Band 7 | | | | | | | | | |
|---|---|---|---|---|---|---|---|---|---|
| Bandwidth (MHz) | Modulation | RB Size | RB Offset | Conducted Output Power | | | | | |
| | | | | 20825 (2 507.5 MHz) | | 21100 (2 535.0 MHz) | | 21375 (2 562.5 MHz) | |
| | | | | (dBm) | (W) | (dBm) | (W) | (dBm) | (W) |
| 15 | QPSK | 1 | 0 | **23.36** | **0.217** | 23.10 | 0.204 | 23.02 | 0.200 |
| | | 1 | 36 | 22.78 | 0.190 | 22.75 | 0.188 | 22.93 | 0.196 |
| | | 1 | 74 | 22.63 | 0.183 | 22.77 | 0.189 | 22.89 | 0.195 |
| | | 36 | 0 | 21.65 | 0.146 | 21.81 | 0.152 | 21.95 | 0.157 |
| | | 36 | 18 | 21.68 | 0.147 | 21.83 | 0.152 | 21.93 | 0.156 |
| | | 36 | 37 | 21.88 | 0.154 | 21.86 | 0.153 | 21.81 | 0.152 |
| | | 75 | 0 | 21.76 | 0.150 | 21.75 | 0.150 | 21.96 | 0.157 |
| | 16QAM | 1 | 0 | 21.89 | 0.155 | **22.33** | **0.171** | 21.97 | 0.157 |
| | | 1 | 36 | 21.83 | 0.152 | 21.87 | 0.154 | 22.13 | 0.163 |
| | | 1 | 74 | 21.93 | 0.156 | 22.06 | 0.161 | 22.00 | 0.158 |
| | | 36 | 0 | 20.83 | 0.121 | 20.82 | 0.121 | 21.02 | 0.126 |
| | | 36 | 18 | 20.66 | 0.116 | 20.84 | 0.121 | 21.05 | 0.127 |
| | | 36 | 37 | 20.75 | 0.119 | 20.80 | 0.120 | 21.08 | 0.128 |
| | | 75 | 0 | 20.82 | 0.121 | 20.81 | 0.121 | 21.03 | 0.127 |
| | 64QAM | 1 | 0 | 20.89 | 0.123 | 20.96 | 0.125 | 21.01 | 0.126 |
| | | 1 | 36 | 20.97 | 0.125 | 20.85 | 0.122 | 20.84 | 0.121 |
| | | 1 | 74 | 20.88 | 0.122 | **21.06** | **0.128** | 20.90 | 0.123 |
| | | 36 | 0 | 19.76 | 0.095 | 19.80 | 0.095 | 20.00 | 0.100 |
| | | 36 | 18 | 19.78 | 0.095 | 19.91 | 0.098 | 20.02 | 0.100 |
| | | 36 | 37 | 19.80 | 0.095 | 19.83 | 0.096 | 19.93 | 0.098 |
| | | 75 | 0 | 19.75 | 0.094 | 19.75 | 0.094 | 20.00 | 0.100 |
| | 256QAM | 1 | 0 | 18.16 | 0.065 | 18.13 | 0.065 | 17.91 | 0.062 |
| | | 1 | 36 | 17.91 | 0.062 | 18.13 | 0.065 | **18.41** | **0.069** |
| | | 1 | 74 | 18.04 | 0.064 | 17.88 | 0.061 | 18.39 | 0.069 |
| | | 36 | 0 | 18.09 | 0.064 | 17.81 | 0.060 | 18.06 | 0.064 |
| | | 36 | 18 | 17.79 | 0.060 | 17.95 | 0.062 | 18.04 | 0.064 |
| | | 36 | 37 | 17.93 | 0.062 | 17.87 | 0.061 | 17.94 | 0.062 |
| | | 75 | 0 | 17.83 | 0.061 | 17.83 | 0.061 | 17.95 | 0.062 |

| LTE Band 7 | | | | | | | | | |
|---|---|---|---|---|---|---|---|---|---|
| Bandwidth (MHz) | Modulation | RB Size | RB Offset | Conducted Output Power | | | | | |
| | | | | 20850 (2 510.0 MHz) | | 21100 (2 535.0 MHz) | | 21350 (2 560.0 MHz) | |
| | | | | (dBm) | (W) | (dBm) | (W) | (dBm) | (W) |
| 20 | QPSK | 1 | 0 | 22.79 | 0.190 | 23.15 | 0.207 | 23.05 | 0.202 |
| | | 1 | 50 | 22.93 | 0.196 | **23.41** | **0.219** | 23.13 | 0.206 |
| | | 1 | 99 | 22.70 | 0.186 | 22.81 | 0.191 | 22.97 | 0.198 |
| | | 50 | 0 | 21.99 | 0.158 | 21.81 | 0.152 | 21.89 | 0.155 |
| | | 50 | 25 | 22.08 | 0.161 | 22.09 | 0.162 | 22.01 | 0.159 |
| | | 50 | 50 | 22.05 | 0.160 | 21.81 | 0.152 | 21.96 | 0.157 |
| | | 100 | 0 | 21.88 | 0.154 | 21.77 | 0.150 | 21.92 | 0.156 |
| | 16QAM | 1 | 0 | 22.06 | 0.161 | 21.68 | 0.147 | 22.05 | 0.160 |
| | | 1 | 50 | 22.02 | 0.159 | 22.01 | 0.159 | **22.12** | **0.163** |
| | | 1 | 99 | 21.94 | 0.156 | 21.79 | 0.151 | 21.96 | 0.157 |
| | | 50 | 0 | 20.85 | 0.122 | 20.97 | 0.125 | 20.90 | 0.123 |
| | | 50 | 25 | 20.83 | 0.121 | 20.85 | 0.122 | 20.96 | 0.125 |
| | | 50 | 50 | 20.81 | 0.121 | 20.82 | 0.121 | 21.16 | 0.131 |
| | | 100 | 0 | 20.73 | 0.118 | 20.80 | 0.120 | 21.06 | 0.128 |
| | 64QAM | 1 | 0 | 20.87 | 0.122 | 20.81 | 0.121 | **21.12** | **0.129** |
| | | 1 | 50 | 20.90 | 0.123 | 20.84 | 0.121 | 21.12 | 0.129 |
| | | 1 | 99 | 20.95 | 0.124 | 20.92 | 0.124 | 21.04 | 0.127 |
| | | 50 | 0 | 19.78 | 0.095 | 19.86 | 0.097 | 19.97 | 0.099 |
| | | 50 | 25 | 19.80 | 0.095 | 19.85 | 0.097 | 20.04 | 0.101 |
| | | 50 | 50 | 19.76 | 0.095 | 20.00 | 0.100 | 20.11 | 0.103 |
| | | 100 | 0 | 19.80 | 0.095 | 19.79 | 0.095 | 20.13 | 0.103 |
| | 256QAM | 1 | 0 | 18.00 | 0.063 | 17.98 | 0.063 | 18.28 | 0.067 |
| | | 1 | 50 | 18.01 | 0.063 | 17.97 | 0.063 | **18.63** | **0.073** |
| | | 1 | 99 | 17.96 | 0.063 | 18.24 | 0.067 | 18.31 | 0.068 |
| | | 50 | 0 | 18.11 | 0.065 | 17.95 | 0.062 | 18.03 | 0.064 |
| | | 50 | 25 | 17.96 | 0.063 | 17.94 | 0.062 | 18.09 | 0.064 |
| | | 50 | 50 | 17.83 | 0.061 | 17.79 | 0.060 | 18.07 | 0.064 |
| | | 100 | 0 | 17.91 | 0.062 | 17.95 | 0.062 | 18.16 | 0.065 |

| LTE Band 12 | | | | | | | | | |
|---|---|---|---|---|---|---|---|---|---|
| Bandwidth (㎒) | Modulation | RB Size | RB Offset | Conducted Output Power | | | | | |
| | | | | 23017 (699.7 ㎒) | | 23095 (707.5 ㎒) | | 23173 (715.3 ㎒) | |
| | | | | (dB m) | (W) | (dB m) | (W) | (dB m) | (W) |
| 1.4 | QPSK | 1 | 0 | 23.38 | 0.218 | 23.37 | 0.217 | 23.35 | 0.216 |
| | | 1 | 3 | 23.41 | 0.219 | 23.11 | 0.205 | 23.33 | 0.215 |
| | | 1 | 5 | **23.51** | **0.224** | 23.46 | 0.222 | 23.28 | 0.213 |
| | | 3 | 0 | 23.37 | 0.217 | 23.40 | 0.219 | 23.24 | 0.211 |
| | | 3 | 2 | 23.33 | 0.215 | 23.41 | 0.219 | 23.46 | 0.222 |
| | | 3 | 3 | 23.33 | 0.215 | 23.36 | 0.217 | 23.44 | 0.221 |
| | | 6 | 0 | 22.43 | 0.175 | 23.33 | 0.215 | 23.31 | 0.214 |
| | 16QAM | 1 | 0 | 22.72 | 0.187 | 22.75 | 0.188 | 22.61 | 0.182 |
| | | 1 | 3 | 22.64 | 0.184 | **22.86** | **0.193** | 22.52 | 0.179 |
| | | 1 | 5 | 22.72 | 0.187 | 22.83 | 0.192 | 22.63 | 0.183 |
| | | 3 | 0 | 22.55 | 0.180 | 22.86 | 0.193 | 22.57 | 0.181 |
| | | 3 | 2 | 22.46 | 0.176 | 22.86 | 0.193 | 22.54 | 0.179 |
| | | 3 | 3 | 22.59 | 0.182 | 22.68 | 0.185 | 22.62 | 0.183 |
| | | 6 | 0 | 21.56 | 0.143 | 21.58 | 0.144 | 21.59 | 0.144 |
| | 64QAM | 1 | 0 | 21.62 | 0.145 | **21.90** | **0.155** | 21.46 | 0.140 |
| | | 1 | 3 | 21.78 | 0.151 | 21.65 | 0.146 | 21.59 | 0.144 |
| | | 1 | 5 | 21.73 | 0.149 | 21.81 | 0.152 | 21.79 | 0.151 |
| | | 3 | 0 | 21.58 | 0.144 | 21.74 | 0.149 | 21.77 | 0.150 |
| | | 3 | 2 | 21.60 | 0.145 | 21.54 | 0.143 | 21.68 | 0.147 |
| | | 3 | 3 | 21.54 | 0.143 | 21.71 | 0.148 | 21.56 | 0.143 |
| | | 6 | 0 | 20.45 | 0.111 | 20.52 | 0.113 | 20.49 | 0.112 |
| | 256QAM | 1 | 0 | 18.57 | 0.072 | 18.77 | 0.075 | 18.68 | 0.074 |
| | | 1 | 3 | 18.69 | 0.074 | 18.74 | 0.075 | **18.87** | **0.077** |
| | | 1 | 5 | 18.60 | 0.072 | 18.62 | 0.073 | 18.79 | 0.076 |
| | | 3 | 0 | 18.49 | 0.071 | 18.67 | 0.074 | 18.84 | 0.077 |
| | | 3 | 2 | 18.56 | 0.072 | 18.67 | 0.074 | 18.81 | 0.076 |
| | | 3 | 3 | 18.51 | 0.071 | 18.71 | 0.074 | 18.75 | 0.075 |
| | | 6 | 0 | 18.48 | 0.070 | 18.73 | 0.075 | 18.82 | 0.076 |

| LTE Band 12 | | | | | | | | | |
|---|---|---|---|---|---|---|---|---|---|
| Bandwidth (㎒) | Modulation | RB Size | RB Offset | Conducted Output Power | | | | | |
| | | | | 23025 (700.5 ㎒) | | 23095 (707.5 ㎒) | | 23165 (714.5 ㎒) | |
| | | | | (dB m) | (W) | (dB m) | (W) | (dB m) | (W) |
| 3 | QPSK | 1 | 0 | 23.19 | 0.208 | 23.22 | 0.210 | 23.22 | 0.210 |
| | | 1 | 7 | **23.40** | **0.219** | 23.19 | 0.208 | 23.22 | 0.210 |
| | | 1 | 14 | 23.23 | 0.210 | 23.20 | 0.209 | 23.31 | 0.214 |
| | | 8 | 0 | 22.22 | 0.167 | 22.16 | 0.164 | 22.19 | 0.166 |
| | | 8 | 4 | 22.19 | 0.166 | 22.18 | 0.165 | 22.14 | 0.164 |
| | | 8 | 7 | 22.20 | 0.166 | 22.21 | 0.166 | 22.18 | 0.165 |
| | | 15 | 0 | 22.22 | 0.167 | 22.14 | 0.164 | 22.13 | 0.163 |
| | 16QAM | 1 | 0 | 22.58 | 0.181 | 22.55 | 0.180 | 22.52 | 0.179 |
| | | 1 | 7 | 22.50 | 0.178 | 22.56 | 0.180 | 22.75 | 0.188 |
| | | 1 | 14 | 22.48 | 0.177 | 22.39 | 0.173 | **22.79** | **0.190** |
| | | 8 | 0 | 21.28 | 0.134 | 21.19 | 0.132 | 21.18 | 0.131 |
| | | 8 | 4 | 21.31 | 0.135 | 21.21 | 0.132 | 21.20 | 0.132 |
| | | 8 | 7 | 21.27 | 0.134 | 21.33 | 0.136 | 21.19 | 0.132 |
| | | 15 | 0 | 21.28 | 0.134 | 21.24 | 0.133 | 21.18 | 0.131 |
| | 64QAM | 1 | 0 | 21.50 | 0.141 | 21.52 | 0.142 | 21.32 | 0.136 |
| | | 1 | 7 | 21.50 | 0.141 | **21.67** | **0.147** | 21.27 | 0.134 |
| | | 1 | 14 | 21.54 | 0.143 | 21.31 | 0.135 | 21.59 | 0.144 |
| | | 8 | 0 | 20.32 | 0.108 | 20.26 | 0.106 | 20.17 | 0.104 |
| | | 8 | 4 | 20.27 | 0.106 | 20.22 | 0.105 | 20.14 | 0.103 |
| | | 8 | 7 | 20.21 | 0.105 | 20.32 | 0.108 | 20.22 | 0.105 |
| | | 15 | 0 | 20.12 | 0.103 | 20.20 | 0.105 | 20.26 | 0.106 |
| | 256QAM | 1 | 0 | 18.11 | 0.065 | 18.31 | 0.068 | **18.41** | **0.069** |
| | | 1 | 7 | 18.15 | 0.065 | 18.17 | 0.066 | 18.14 | 0.065 |
| | | 1 | 14 | 18.38 | 0.069 | 18.13 | 0.065 | 18.15 | 0.065 |
| | | 8 | 0 | 18.20 | 0.066 | 17.96 | 0.063 | 17.94 | 0.062 |
| | | 8 | 4 | 18.06 | 0.064 | 18.29 | 0.067 | 18.18 | 0.066 |
| | | 8 | 7 | 18.26 | 0.067 | 17.89 | 0.062 | 17.99 | 0.063 |
| | | 15 | 0 | 18.21 | 0.066 | 18.04 | 0.064 | 18.01 | 0.063 |

| LTE Band 12/17 | | | | | | | | | |
|---|---|---|---|---|---|---|---|---|---|
| Bandwidth (MHz) | Modulation | RB Size | RB Offset | Conducted Output Power | | | | | |
| | | | | 23035 (701.5 MHz) | | 23095 (707.5 MHz) | | 23155 (713.5 MHz) | |
| | | | | (dBm) | (W) | (dBm) | (W) | (dBm) | (W) |
| 5 | QPSK | 1 | 0 | 23.28 | 0.213 | 23.48 | 0.223 | 23.44 | 0.221 |
| | | 1 | 12 | 23.38 | 0.218 | 23.43 | 0.220 | **23.50** | **0.224** |
| | | 1 | 24 | 23.37 | 0.217 | 23.42 | 0.220 | 23.45 | 0.221 |
| | | 12 | 0 | 22.39 | 0.173 | 22.36 | 0.172 | 22.41 | 0.174 |
| | | 12 | 6 | 22.42 | 0.175 | 22.34 | 0.171 | 22.41 | 0.174 |
| | | 12 | 13 | 22.38 | 0.173 | 22.35 | 0.172 | 22.45 | 0.176 |
| | | 25 | 0 | 22.37 | 0.173 | 22.46 | 0.176 | 22.40 | 0.174 |
| | 16QAM | 1 | 0 | 22.71 | 0.187 | 22.66 | 0.185 | 22.69 | 0.186 |
| | | 1 | 12 | 22.77 | 0.189 | 22.78 | 0.190 | **22.84** | **0.192** |
| | | 1 | 24 | 22.76 | 0.189 | 22.75 | 0.188 | 22.56 | 0.180 |
| | | 12 | 0 | 21.41 | 0.138 | 21.44 | 0.139 | 21.43 | 0.139 |
| | | 12 | 6 | 21.43 | 0.139 | 21.39 | 0.138 | 21.44 | 0.139 |
| | | 12 | 13 | 21.46 | 0.140 | 21.36 | 0.137 | 21.44 | 0.139 |
| | | 25 | 0 | 21.74 | 0.149 | 21.53 | 0.142 | 21.44 | 0.139 |
| | 64QAM | 1 | 0 | 21.82 | 0.152 | 21.74 | 0.149 | 21.71 | 0.148 |
| | | 1 | 12 | 21.75 | 0.150 | 21.76 | 0.150 | 21.62 | 0.145 |
| | | 1 | 24 | **21.97** | **0.157** | 21.59 | 0.144 | 21.52 | 0.142 |
| | | 12 | 0 | 20.39 | 0.109 | 20.37 | 0.109 | 20.46 | 0.111 |
| | | 12 | 6 | 20.41 | 0.110 | 20.38 | 0.109 | 20.46 | 0.111 |
| | | 12 | 13 | 20.38 | 0.109 | 20.33 | 0.108 | 20.42 | 0.110 |
| | | 25 | 0 | 20.36 | 0.109 | 20.53 | 0.113 | 20.43 | 0.110 |
| | 256QAM | 1 | 0 | 18.61 | 0.073 | 18.50 | 0.071 | 18.55 | 0.072 |
| | | 1 | 12 | 18.54 | 0.071 | **18.64** | **0.073** | 18.61 | 0.073 |
| | | 1 | 24 | 18.57 | 0.072 | 18.63 | 0.073 | 18.29 | 0.067 |
| | | 12 | 0 | 18.47 | 0.070 | 18.51 | 0.071 | 18.43 | 0.070 |
| | | 12 | 6 | 18.50 | 0.071 | 18.56 | 0.072 | 18.49 | 0.071 |
| | | 12 | 13 | 18.61 | 0.073 | 18.54 | 0.071 | 18.49 | 0.071 |
| | | 25 | 0 | 18.38 | 0.069 | 18.54 | 0.071 | 18.34 | 0.068 |

| LTE Band 12/17 | | | | | | | | | |
|---|---|---|---|---|---|---|---|---|---|
| Bandwidth (MHz) | Modulation | RB Size | RB Offset | Conducted Output Power | | | | | |
| | | | | 23060 (704.0 MHz) | | 23095 (707.5 MHz) | | 23130 (711.0 MHz) | |
| | | | | (dBm) | (W) | (dBm) | (W) | (dBm) | (W) |
| 10 | QPSK | 1 | 0 | 23.49 | 0.223 | **23.54** | **0.226** | 23.52 | 0.225 |
| | | 1 | 25 | 23.43 | 0.220 | 23.47 | 0.222 | 23.51 | 0.224 |
| | | 1 | 49 | 23.51 | 0.224 | 23.46 | 0.222 | 23.50 | 0.224 |
| | | 25 | 0 | 22.44 | 0.175 | 22.39 | 0.173 | 22.34 | 0.171 |
| | | 25 | 12 | 22.42 | 0.175 | 22.36 | 0.172 | 22.38 | 0.173 |
| | | 25 | 25 | 22.46 | 0.176 | 22.32 | 0.171 | 22.31 | 0.170 |
| | | 50 | 0 | 22.45 | 0.176 | 22.31 | 0.170 | 22.34 | 0.171 |
| | 16QAM | 1 | 0 | 22.64 | 0.184 | 22.86 | 0.193 | 22.78 | 0.190 |
| | | 1 | 25 | 22.51 | 0.178 | 22.84 | 0.192 | 22.27 | 0.169 |
| | | 1 | 49 | 22.48 | 0.177 | **22.88** | **0.194** | 22.83 | 0.192 |
| | | 25 | 0 | 21.41 | 0.138 | 21.38 | 0.137 | 21.34 | 0.136 |
| | | 25 | 12 | 21.43 | 0.139 | 21.41 | 0.138 | 21.35 | 0.136 |
| | | 25 | 25 | 21.42 | 0.139 | 21.35 | 0.136 | 21.35 | 0.136 |
| | | 50 | 0 | 21.38 | 0.137 | 21.31 | 0.135 | 21.33 | 0.136 |
| | 64QAM | 1 | 0 | 21.83 | 0.152 | 21.89 | 0.155 | 21.89 | 0.155 |
| | | 1 | 25 | 21.97 | 0.157 | 21.84 | 0.153 | 21.87 | 0.154 |
| | | 1 | 49 | 21.98 | 0.158 | **21.98** | **0.158** | 21.76 | 0.150 |
| | | 25 | 0 | 20.40 | 0.110 | 20.37 | 0.109 | 20.37 | 0.109 |
| | | 25 | 12 | 20.42 | 0.110 | 20.39 | 0.109 | 20.35 | 0.108 |
| | | 25 | 25 | 20.37 | 0.109 | 20.33 | 0.108 | 20.36 | 0.109 |
| | | 50 | 0 | 20.45 | 0.111 | 20.34 | 0.108 | 20.39 | 0.109 |
| | 256QAM | 1 | 0 | 18.75 | 0.075 | 18.81 | 0.076 | 18.71 | 0.074 |
| | | 1 | 25 | 18.76 | 0.075 | 18.76 | 0.075 | 18.63 | 0.073 |
| | | 1 | 49 | **18.92** | **0.078** | 18.79 | 0.076 | 18.77 | 0.075 |
| | | 25 | 0 | 18.88 | 0.077 | 18.68 | 0.074 | 18.63 | 0.073 |
| | | 25 | 12 | 18.73 | 0.075 | 18.68 | 0.074 | 18.62 | 0.073 |
| | | 25 | 25 | 18.72 | 0.074 | 18.59 | 0.072 | 18.54 | 0.071 |
| | | 50 | 0 | 18.76 | 0.075 | 18.67 | 0.074 | 18.59 | 0.072 |

| LTE Band 13 | | | | | | | | | |
|---|---|---|---|---|---|---|---|---|---|
| Bandwidth (㎒) | Modulation | RB Size | RB Offset | Conducted Output Power | | | | | |
| | | | | 23205 (779.5 ㎒) | | 23230 (782.0 ㎒) | | 23255 (784.5 ㎒) | |
| | | | | (dBm) | (W) | (dBm) | (W) | (dBm) | (W) |
| 5 | QPSK | 1 | 0 | **23.43** | **0.220** | 23.20 | 0.209 | 23.25 | 0.211 |
| | | 1 | 12 | 23.24 | 0.211 | 23.23 | 0.210 | 23.10 | 0.204 |
| | | 1 | 24 | 23.43 | 0.220 | 23.27 | 0.212 | 23.09 | 0.204 |
| | | 12 | 0 | 22.26 | 0.168 | 22.32 | 0.171 | 22.22 | 0.167 |
| | | 12 | 6 | 22.36 | 0.172 | 22.28 | 0.169 | 22.19 | 0.166 |
| | | 12 | 13 | 22.36 | 0.172 | 22.30 | 0.170 | 22.22 | 0.167 |
| | | 25 | 0 | 22.35 | 0.172 | 22.34 | 0.171 | 22.14 | 0.164 |
| | 16QAM | 1 | 0 | 22.65 | 0.184 | 22.66 | 0.185 | 22.46 | 0.176 |
| | | 1 | 12 | 22.71 | 0.187 | **22.76** | **0.189** | 22.45 | 0.176 |
| | | 1 | 24 | 22.40 | 0.174 | 22.67 | 0.185 | 22.37 | 0.173 |
| | | 12 | 0 | 21.33 | 0.136 | 21.36 | 0.137 | 21.50 | 0.141 |
| | | 12 | 6 | 21.41 | 0.138 | 21.32 | 0.136 | 21.49 | 0.141 |
| | | 12 | 13 | 21.39 | 0.138 | 21.34 | 0.136 | 21.48 | 0.141 |
| | | 25 | 0 | 21.44 | 0.139 | 21.29 | 0.135 | 21.46 | 0.140 |
| | 64QAM | 1 | 0 | 21.59 | 0.144 | 21.64 | 0.146 | 21.46 | 0.140 |
| | | 1 | 12 | 21.35 | 0.136 | **21.68** | **0.147** | 21.28 | 0.134 |
| | | 1 | 24 | 21.23 | 0.133 | 21.31 | 0.135 | 21.11 | 0.129 |
| | | 12 | 0 | 20.35 | 0.108 | 20.39 | 0.109 | 20.12 | 0.103 |
| | | 12 | 6 | 20.43 | 0.110 | 20.31 | 0.107 | 20.14 | 0.103 |
| | | 12 | 13 | 20.39 | 0.109 | 20.28 | 0.107 | 20.14 | 0.103 |
| | | 25 | 0 | 20.33 | 0.108 | 20.27 | 0.106 | 20.46 | 0.111 |
| | 256QAM | 1 | 0 | 18.13 | 0.065 | 18.20 | 0.066 | 18.60 | 0.072 |
| | | 1 | 12 | 18.43 | 0.070 | 18.20 | 0.066 | 18.61 | 0.073 |
| | | 1 | 24 | 18.30 | 0.068 | 18.09 | 0.064 | 18.66 | 0.073 |
| | | 12 | 0 | 18.17 | 0.066 | 18.20 | 0.066 | 18.64 | 0.073 |
| | | 12 | 6 | 18.23 | 0.067 | 18.06 | 0.064 | 18.60 | 0.072 |
| | | 12 | 13 | 18.09 | 0.064 | 18.10 | 0.065 | **18.70** | **0.074** |
| | | 25 | 0 | 18.13 | 0.065 | 18.19 | 0.066 | 18.64 | 0.073 |

| LTE Band 13 | | | | | | | | | |
|---|---|---|---|---|---|---|---|---|---|
| Bandwidth (㎒) | Modulation | RB Size | RB Offset | Conducted Output Power | | | | | |
| | | | | | | 23230 (782.0 ㎒) | | | |
| | | | | | | (dBm) | (W) | | |
| 10 | QPSK | 1 | 0 | - | - | 23.16 | 0.207 | - | - |
| | | 1 | 25 | - | - | 23.41 | 0.219 | - | - |
| | | 1 | 49 | - | - | **23.52** | **0.225** | - | - |
| | | 25 | 0 | - | - | 22.35 | 0.172 | - | - |
| | | 25 | 12 | - | - | 22.39 | 0.173 | - | - |
| | | 25 | 25 | - | - | 22.44 | 0.175 | - | - |
| | | 50 | 0 | - | - | 22.36 | 0.172 | - | - |
| | 16QAM | 1 | 0 | - | - | 22.34 | 0.171 | - | - |
| | | 1 | 25 | - | - | **22.69** | **0.186** | - | - |
| | | 1 | 49 | - | - | 22.59 | 0.182 | - | - |
| | | 25 | 0 | - | - | 21.40 | 0.138 | - | - |
| | | 25 | 12 | - | - | 21.36 | 0.137 | - | - |
| | | 25 | 25 | - | - | 21.42 | 0.139 | - | - |
| | | 50 | 0 | - | - | 21.33 | 0.136 | - | - |
| | 64QAM | 1 | 0 | - | - | 21.59 | 0.144 | - | - |
| | | 1 | 25 | - | - | 21.57 | 0.144 | - | - |
| | | 1 | 49 | - | - | **21.64** | **0.146** | - | - |
| | | 25 | 0 | - | - | 20.33 | 0.108 | - | - |
| | | 25 | 12 | - | - | 20.32 | 0.108 | - | - |
| | | 25 | 25 | - | - | 20.34 | 0.108 | - | - |
| | | 50 | 0 | - | - | 20.43 | 0.110 | - | - |
| | 256QAM | 1 | 0 | - | - | 18.28 | 0.067 | - | - |
| | | 1 | 25 | - | - | 18.26 | 0.067 | - | - |
| | | 1 | 49 | - | - | **18.29** | **0.067** | - | - |
| | | 25 | 0 | - | - | 18.26 | 0.067 | - | - |
| | | 25 | 12 | - | - | 18.21 | 0.066 | - | - |
| | | 25 | 25 | - | - | 18.23 | 0.067 | - | - |
| | | 50 | 0 | - | - | 18.20 | 0.066 | - | - |

| LTE Band 26_part 90 | | | | | | | | | |
|---|---|---|---|---|---|---|---|---|---|
| Bandwidth (㎒) | Modulation | RB Size | RB Offset | Conducted Output Power | | | | | |
| | | | | 26697 (814.7 ㎒) | | 26740 (819.0 ㎒) | | 26783 (823.3 ㎒) | |
| | | | | (dBm) | (W) | (dBm) | (W) | (dBm) | (W) |
| 1.4 | QPSK | 1 | 0 | 23.19 | 0.208 | 22.96 | 0.198 | 23.27 | 0.212 |
| | | 1 | 3 | 23.22 | 0.210 | 23.01 | 0.200 | 23.28 | 0.213 |
| | | 1 | 5 | 23.27 | 0.212 | 23.03 | 0.201 | **23.30** | **0.214** |
| | | 3 | 0 | 23.21 | 0.209 | 23.04 | 0.201 | 23.22 | 0.210 |
| | | 3 | 2 | 23.22 | 0.210 | 23.10 | 0.204 | 23.29 | 0.213 |
| | | 3 | 3 | 23.22 | 0.210 | 23.15 | 0.207 | 23.29 | 0.213 |
| | | 6 | 0 | 22.26 | 0.168 | 22.08 | 0.161 | 22.31 | 0.170 |
| | 16QAM | 1 | 0 | 22.35 | 0.172 | 22.15 | 0.164 | 22.38 | 0.173 |
| | | 1 | 3 | **22.67** | **0.185** | 22.23 | 0.167 | 22.52 | 0.179 |
| | | 1 | 5 | 22.49 | 0.177 | 22.32 | 0.171 | 22.53 | 0.179 |
| | | 3 | 0 | 22.36 | 0.172 | 22.18 | 0.165 | 22.33 | 0.171 |
| | | 3 | 2 | 22.36 | 0.172 | 22.24 | 0.167 | 22.41 | 0.174 |
| | | 3 | 3 | 22.31 | 0.170 | 22.25 | 0.168 | 22.35 | 0.172 |
| | | 6 | 0 | 21.35 | 0.136 | 21.18 | 0.131 | 21.36 | 0.137 |
| | 64QAM | 1 | 0 | 21.37 | 0.137 | 21.19 | 0.132 | 21.43 | 0.139 |
| | | 1 | 3 | 21.31 | 0.135 | 21.32 | 0.136 | 21.44 | 0.139 |
| | | 1 | 5 | **21.54** | **0.143** | 21.28 | 0.134 | 21.42 | 0.139 |
| | | 3 | 0 | 21.43 | 0.139 | 21.16 | 0.131 | 21.33 | 0.136 |
| | | 3 | 2 | 21.37 | 0.137 | 21.20 | 0.132 | 21.39 | 0.138 |
| | | 3 | 3 | 21.36 | 0.137 | 21.18 | 0.131 | 21.41 | 0.138 |
| | | 6 | 0 | 20.30 | 0.107 | 20.14 | 0.103 | 20.31 | 0.107 |
| | 256QAM | 1 | 0 | 18.62 | 0.073 | 18.22 | 0.066 | 18.41 | 0.069 |
| | | 1 | 3 | 18.62 | 0.073 | 18.25 | 0.067 | 18.43 | 0.070 |
| | | 1 | 5 | 18.64 | 0.073 | 18.34 | 0.068 | 18.37 | 0.069 |
| | | 3 | 0 | **18.97** | **0.079** | 18.07 | 0.064 | 18.35 | 0.068 |
| | | 3 | 2 | 18.96 | 0.079 | 18.13 | 0.065 | 18.41 | 0.069 |
| | | 3 | 3 | 18.66 | 0.073 | 18.20 | 0.066 | 18.38 | 0.069 |
| | | 6 | 0 | 18.67 | 0.074 | 18.14 | 0.065 | 18.35 | 0.068 |

| LTE Band 26_part 90 | | | | | | | | | |
|---|---|---|---|---|---|---|---|---|---|
| Bandwidth (㎒) | Modulation | RB Size | RB Offset | Conducted Output Power | | | | | |
| | | | | 26705 (815.5 ㎒) | | 26740 (819.0 ㎒) | | 26775 (822.5 ㎒) | |
| | | | | (dBm) | (W) | (dBm) | (W) | (dBm) | (W) |
| 3 | QPSK | 1 | 0 | 23.23 | 0.210 | 23.23 | 0.210 | 23.27 | 0.212 |
| | | 1 | 7 | 23.25 | 0.211 | 23.22 | 0.210 | 23.28 | 0.213 |
| | | 1 | 14 | **23.28** | **0.213** | 23.15 | 0.207 | 23.17 | 0.207 |
| | | 8 | 0 | 22.21 | 0.166 | 22.21 | 0.166 | 22.26 | 0.168 |
| | | 8 | 4 | 22.19 | 0.166 | 22.26 | 0.168 | 22.34 | 0.171 |
| | | 8 | 7 | 22.18 | 0.165 | 22.29 | 0.169 | 22.26 | 0.168 |
| | | 15 | 0 | 22.14 | 0.164 | 22.30 | 0.170 | 22.32 | 0.171 |
| | 16QAM | 1 | 0 | 22.52 | 0.179 | 22.40 | 0.174 | 22.33 | 0.171 |
| | | 1 | 7 | **22.70** | **0.186** | 22.56 | 0.180 | 22.61 | 0.182 |
| | | 1 | 14 | 22.55 | 0.180 | 22.35 | 0.172 | 22.36 | 0.172 |
| | | 8 | 0 | 21.28 | 0.134 | 21.28 | 0.134 | 21.35 | 0.136 |
| | | 8 | 4 | 21.32 | 0.136 | 21.33 | 0.136 | 21.37 | 0.137 |
| | | 8 | 7 | 21.25 | 0.133 | 21.32 | 0.136 | 21.31 | 0.135 |
| | | 15 | 0 | 21.27 | 0.134 | 21.31 | 0.135 | 21.33 | 0.136 |
| | 64QAM | 1 | 0 | 21.27 | 0.134 | 21.37 | 0.137 | 21.29 | 0.135 |
| | | 1 | 7 | 21.44 | 0.139 | 21.43 | 0.139 | 21.44 | 0.139 |
| | | 1 | 14 | **21.48** | **0.141** | 21.34 | 0.136 | 21.43 | 0.139 |
| | | 8 | 0 | 20.26 | 0.106 | 20.21 | 0.105 | 20.26 | 0.106 |
| | | 8 | 4 | 20.17 | 0.104 | 20.28 | 0.107 | 20.31 | 0.107 |
| | | 8 | 7 | 20.18 | 0.104 | 20.33 | 0.108 | 20.29 | 0.107 |
| | | 15 | 0 | 20.28 | 0.107 | 20.30 | 0.107 | 20.36 | 0.109 |
| | 256QAM | 1 | 0 | 18.70 | 0.074 | 18.32 | 0.068 | 18.27 | 0.067 |
| | | 1 | 7 | 18.58 | 0.072 | 18.38 | 0.069 | 18.38 | 0.069 |
| | | 1 | 14 | 18.81 | 0.076 | 18.26 | 0.067 | 18.34 | 0.068 |
| | | 8 | 0 | 18.94 | 0.078 | 18.32 | 0.068 | 18.21 | 0.066 |
| | | 8 | 4 | **19.01** | **0.080** | 18.36 | 0.069 | 18.32 | 0.068 |
| | | 8 | 7 | 18.95 | 0.079 | 18.23 | 0.067 | 18.30 | 0.068 |
| | | 15 | 0 | 18.92 | 0.078 | 18.30 | 0.068 | 18.33 | 0.068 |

| LTE Band 26_part 90 | | | | | | | | | |
|---|---|---|---|---|---|---|---|---|---|
| Bandwidth (㎒) | Modulation | RB Size | RB Offset | Conducted Output Power | | | | | |
| | | | | 26715 (816.5 ㎒) | | 26740 (819.0 ㎒) | | 26765 (821.5 ㎒) | |
| | | | | (dBm) | (W) | (dBm) | (W) | (dBm) | (W) |
| 5 | QPSK | 1 | 0 | 23.18 | 0.208 | 22.87 | 0.194 | 23.14 | 0.206 |
| | | 1 | 12 | **23.28** | **0.213** | 23.15 | 0.207 | 23.12 | 0.205 |
| | | 1 | 24 | 23.23 | 0.210 | 23.06 | 0.202 | 23.08 | 0.203 |
| | | 12 | 0 | 22.21 | 0.166 | 22.16 | 0.164 | 22.28 | 0.169 |
| | | 12 | 6 | 22.29 | 0.169 | 22.19 | 0.166 | 22.31 | 0.170 |
| | | 12 | 13 | 22.23 | 0.167 | 22.15 | 0.164 | 22.27 | 0.169 |
| | | 25 | 0 | 22.24 | 0.167 | 22.22 | 0.167 | 22.29 | 0.169 |
| | 16QAM | 1 | 0 | 22.58 | 0.181 | 22.38 | 0.173 | 22.34 | 0.171 |
| | | 1 | 12 | **22.66** | **0.185** | 22.39 | 0.173 | 22.31 | 0.170 |
| | | 1 | 24 | 22.60 | 0.182 | 22.34 | 0.171 | 22.28 | 0.169 |
| | | 12 | 0 | 21.23 | 0.133 | 21.17 | 0.131 | 21.30 | 0.135 |
| | | 12 | 6 | 21.36 | 0.137 | 21.19 | 0.132 | 21.24 | 0.133 |
| | | 12 | 13 | 21.27 | 0.134 | 21.15 | 0.130 | 21.27 | 0.134 |
| | | 25 | 0 | 21.26 | 0.134 | 21.21 | 0.132 | 21.26 | 0.134 |
| | 64QAM | 1 | 0 | 21.42 | 0.139 | 21.31 | 0.135 | 21.41 | 0.138 |
| | | 1 | 12 | 21.32 | 0.136 | 21.27 | 0.134 | 21.46 | 0.140 |
| | | 1 | 24 | **21.49** | **0.141** | 21.25 | 0.133 | 21.42 | 0.139 |
| | | 12 | 0 | 20.24 | 0.106 | 20.28 | 0.107 | 20.23 | 0.105 |
| | | 12 | 6 | 20.26 | 0.106 | 20.26 | 0.106 | 20.35 | 0.108 |
| | | 12 | 13 | 20.15 | 0.104 | 20.24 | 0.106 | 20.31 | 0.107 |
| | | 25 | 0 | 20.16 | 0.104 | 20.22 | 0.105 | 20.32 | 0.108 |
| | 256QAM | 1 | 0 | 18.83 | 0.076 | 18.25 | 0.067 | 18.22 | 0.066 |
| | | 1 | 12 | 18.83 | 0.076 | 18.27 | 0.067 | 18.25 | 0.067 |
| | | 1 | 24 | **19.06** | **0.081** | 18.24 | 0.067 | 18.22 | 0.066 |
| | | 12 | 0 | 18.79 | 0.076 | 18.22 | 0.066 | 18.27 | 0.067 |
| | | 12 | 6 | 18.78 | 0.076 | 18.25 | 0.067 | 18.23 | 0.067 |
| | | 12 | 13 | 18.95 | 0.079 | 18.21 | 0.066 | 18.25 | 0.067 |
| | | 25 | 0 | 18.78 | 0.076 | 18.17 | 0.066 | 18.31 | 0.068 |

| LTE Band 26_part 90 | | | | | | | | | |
|---|---|---|---|---|---|---|---|---|---|
| Bandwidth (㎒) | Modulation | RB Size | RB Offset | Conducted Output Power | | | | | |
| | | | | | | 26740 (819.0 ㎒) | | | |
| | | | | | | (dBm) | (W) | | |
| 10 | QPSK | 1 | 0 | - | - | **23.31** | **0.214** | - | - |
| | | 1 | 25 | - | - | 23.28 | 0.213 | - | - |
| | | 1 | 49 | - | - | 23.23 | 0.210 | - | - |
| | | 25 | 0 | - | - | 22.26 | 0.168 | - | - |
| | | 25 | 12 | - | - | 22.27 | 0.169 | - | - |
| | | 25 | 25 | - | - | 22.21 | 0.166 | - | - |
| | | 50 | 0 | - | - | 22.27 | 0.169 | - | - |
| | 16QAM | 1 | 0 | - | - | 22.41 | 0.174 | - | - |
| | | 1 | 25 | - | - | 22.40 | 0.174 | - | - |
| | | 1 | 49 | - | - | **22.59** | **0.182** | - | - |
| | | 25 | 0 | - | - | 21.30 | 0.135 | - | - |
| | | 25 | 12 | - | - | 21.32 | 0.136 | - | - |
| | | 25 | 25 | - | - | 21.27 | 0.134 | - | - |
| | | 50 | 0 | - | - | 21.31 | 0.135 | - | - |
| | 64QAM | 1 | 0 | - | - | 21.37 | 0.137 | - | - |
| | | 1 | 25 | - | - | **21.50** | **0.141** | - | - |
| | | 1 | 49 | - | - | 21.42 | 0.139 | - | - |
| | | 25 | 0 | - | - | 20.26 | 0.106 | - | - |
| | | 25 | 12 | - | - | 20.33 | 0.108 | - | - |
| | | 25 | 25 | - | - | 20.29 | 0.107 | - | - |
| | | 50 | 0 | - | - | 20.28 | 0.107 | - | - |
| | 256QAM | 1 | 0 | - | - | 18.37 | 0.069 | - | - |
| | | 1 | 25 | - | - | **18.40** | **0.069** | - | - |
| | | 1 | 49 | - | - | 18.35 | 0.068 | - | - |
| | | 25 | 0 | - | - | 18.26 | 0.067 | - | - |
| | | 25 | 12 | - | - | 18.29 | 0.067 | - | - |
| | | 25 | 25 | - | - | 18.32 | 0.068 | - | - |
| | | 50 | 0 | - | - | 18.37 | 0.069 | - | - |

| LTE Band 26_part 90 | | | | | | | | | |
|---|---|---|---|---|---|---|---|---|---|
| Bandwidth (㎒) | Modulation | RB Size | RB Offset | Conducted Output Power | | | | | |
| | | | | | | 26765 (821.5 ㎒) | | | |
| | | | | | | (dBm) | (W) | | |
| 15 | QPSK | 1 | 0 | - | - | 23.01 | 0.200 | - | - |
| | | 1 | 36 | - | - | 22.97 | 0.198 | - | - |
| | | 1 | 74 | - | - | **23.06** | **0.202** | - | - |
| | | 36 | 0 | - | - | 22.25 | 0.168 | - | - |
| | | 36 | 18 | - | - | 22.30 | 0.170 | - | - |
| | | 36 | 37 | - | - | 22.16 | 0.164 | - | - |
| | | 75 | 0 | - | - | 22.12 | 0.163 | - | - |
| | 16QAM | 1 | 0 | - | - | 22.42 | 0.175 | - | - |
| | | 1 | 36 | - | - | 22.41 | 0.174 | - | - |
| | | 1 | 74 | - | - | **22.49** | **0.177** | - | - |
| | | 36 | 0 | - | - | 21.25 | 0.133 | - | - |
| | | 36 | 18 | - | - | 21.12 | 0.129 | - | - |
| | | 36 | 37 | - | - | 21.14 | 0.130 | - | - |
| | | 75 | 0 | - | - | 21.18 | 0.131 | - | - |
| | 64QAM | 1 | 0 | - | - | 21.22 | 0.132 | - | - |
| | | 1 | 36 | - | - | 21.24 | 0.133 | - | - |
| | | 1 | 74 | - | - | **21.26** | **0.134** | - | - |
| | | 36 | 0 | - | - | 20.25 | 0.106 | - | - |
| | | 36 | 18 | - | - | 20.30 | 0.107 | - | - |
| | | 36 | 37 | - | - | 20.21 | 0.105 | - | - |
| | | 75 | 0 | - | - | 20.56 | 0.114 | - | - |
| | 256QAM | 1 | 0 | - | - | **18.41** | **0.069** | - | - |
| | | 1 | 36 | - | - | 18.37 | 0.069 | - | - |
| | | 1 | 74 | - | - | 18.35 | 0.068 | - | - |
| | | 36 | 0 | - | - | 18.32 | 0.068 | - | - |
| | | 36 | 18 | - | - | 18.36 | 0.069 | - | - |
| | | 36 | 37 | - | - | 18.33 | 0.068 | - | - |
| | | 75 | 0 | - | - | 18.34 | 0.068 | - | - |

| LTE Band 71 | | | | | | | | | |
|---|---|---|---|---|---|---|---|---|---|
| Bandwidth (㎒) | Modulation | RB Size | RB Offset | Conducted Output Power | | | | | |
| | | | | 133147 (665.5 ㎒) | | 133297 (680.5 ㎒) | | 133447 (695.5 ㎒) | |
| | | | | (dBm) | (W) | (dBm) | (W) | (dBm) | (W) |
| 5 | QPSK | 1 | 0 | 22.71 | 0.187 | 23.04 | 0.201 | 23.02 | 0.200 |
| | | 1 | 12 | 22.87 | 0.194 | 22.93 | 0.196 | **23.24** | **0.211** |
| | | 1 | 24 | 22.71 | 0.187 | 23.09 | 0.204 | 22.82 | 0.191 |
| | | 12 | 0 | 21.84 | 0.153 | 21.88 | 0.154 | 22.25 | 0.168 |
| | | 12 | 6 | 21.90 | 0.155 | 21.89 | 0.155 | 22.23 | 0.167 |
| | | 12 | 13 | 21.87 | 0.154 | 21.88 | 0.154 | 22.26 | 0.168 |
| | | 25 | 0 | 21.81 | 0.152 | 21.98 | 0.158 | 22.21 | 0.166 |
| | 16QAM | 1 | 0 | 21.86 | 0.153 | 21.94 | 0.156 | 22.13 | 0.163 |
| | | 1 | 12 | 21.92 | 0.156 | 21.69 | 0.148 | **22.21** | **0.166** |
| | | 1 | 24 | 22.01 | 0.159 | 22.12 | 0.163 | 22.04 | 0.160 |
| | | 12 | 0 | 20.75 | 0.119 | 21.00 | 0.126 | 21.28 | 0.134 |
| | | 12 | 6 | 20.93 | 0.124 | 20.95 | 0.124 | 21.29 | 0.135 |
| | | 12 | 13 | 20.91 | 0.123 | 20.99 | 0.126 | 21.25 | 0.133 |
| | | 25 | 0 | 20.94 | 0.124 | 21.05 | 0.127 | 21.22 | 0.132 |
| | 64QAM | 1 | 0 | 21.24 | 0.133 | 21.38 | 0.137 | 21.11 | 0.129 |
| | | 1 | 12 | 21.02 | 0.126 | 20.81 | 0.121 | 21.35 | 0.136 |
| | | 1 | 24 | 21.15 | 0.130 | 21.27 | 0.134 | **21.43** | **0.139** |
| | | 12 | 0 | 19.77 | 0.095 | 19.91 | 0.098 | 20.24 | 0.106 |
| | | 12 | 6 | 20.00 | 0.100 | 19.99 | 0.100 | 20.22 | 0.105 |
| | | 12 | 13 | 19.88 | 0.097 | 19.97 | 0.099 | 20.25 | 0.106 |
| | | 25 | 0 | 19.98 | 0.100 | 19.94 | 0.099 | 20.28 | 0.107 |
| | 256QAM | 1 | 0 | 18.13 | 0.065 | **18.43** | **0.070** | 17.88 | 0.061 |
| | | 1 | 12 | 17.94 | 0.062 | 17.96 | 0.063 | 18.16 | 0.065 |
| | | 1 | 24 | 17.69 | 0.059 | 18.08 | 0.064 | 18.00 | 0.063 |
| | | 12 | 0 | 17.80 | 0.060 | 18.00 | 0.063 | 18.22 | 0.066 |
| | | 12 | 6 | 17.89 | 0.062 | 17.96 | 0.063 | 18.04 | 0.064 |
| | | 12 | 13 | 17.89 | 0.062 | 17.88 | 0.061 | 18.32 | 0.068 |
| | | 25 | 0 | 17.92 | 0.062 | 17.98 | 0.063 | 18.33 | 0.068 |

| LTE Band 71 | | | | | | | | | |
|---|---|---|---|---|---|---|---|---|---|
| Bandwidth (㎒) | Modulation | RB Size | RB Offset | Conducted Output Power | | | | | |
| | | | | 133172 (668.0 ㎒) | | 133297 (680.5 ㎒) | | 133422 (693.0 ㎒) | |
| | | | | (dBm) | (W) | (dBm) | (W) | (dBm) | (W) |
| 10 | QPSK | 1 | 0 | 22.73 | 0.187 | 22.87 | 0.194 | 22.87 | 0.194 |
| | | 1 | 25 | 22.84 | 0.192 | 23.03 | 0.201 | 23.03 | 0.201 |
| | | 1 | 49 | 22.74 | 0.188 | **23.21** | **0.209** | 22.97 | 0.198 |
| | | 25 | 0 | 22.06 | 0.161 | 22.11 | 0.163 | 22.01 | 0.159 |
| | | 25 | 12 | 22.03 | 0.160 | 21.97 | 0.157 | 22.01 | 0.159 |
| | | 25 | 25 | 21.98 | 0.158 | 22.06 | 0.161 | 22.04 | 0.160 |
| | | 50 | 0 | 21.93 | 0.156 | 22.04 | 0.160 | 22.03 | 0.160 |
| | 16QAM | 1 | 0 | 22.37 | 0.173 | 21.98 | 0.158 | 22.36 | 0.172 |
| | | 1 | 25 | **22.76** | **0.189** | 22.36 | 0.172 | 22.37 | 0.173 |
| | | 1 | 49 | 22.20 | 0.166 | 22.26 | 0.168 | 22.35 | 0.172 |
| | | 25 | 0 | 21.08 | 0.128 | 21.04 | 0.127 | 21.08 | 0.128 |
| | | 25 | 12 | 21.11 | 0.129 | 21.02 | 0.126 | 21.03 | 0.127 |
| | | 25 | 25 | 21.12 | 0.129 | 21.15 | 0.130 | 21.01 | 0.126 |
| | | 50 | 0 | 21.08 | 0.128 | 20.99 | 0.126 | 21.08 | 0.128 |
| | 64QAM | 1 | 0 | 20.88 | 0.122 | **21.43** | **0.139** | 21.18 | 0.131 |
| | | 1 | 25 | 21.17 | 0.131 | 21.21 | 0.132 | 21.25 | 0.133 |
| | | 1 | 49 | 20.84 | 0.121 | 21.10 | 0.129 | 21.33 | 0.136 |
| | | 25 | 0 | 20.08 | 0.102 | 20.03 | 0.101 | 20.06 | 0.101 |
| | | 25 | 12 | 20.05 | 0.101 | 20.06 | 0.101 | 20.06 | 0.101 |
| | | 25 | 25 | 19.97 | 0.099 | 20.13 | 0.103 | 20.03 | 0.101 |
| | | 50 | 0 | 19.88 | 0.097 | 20.04 | 0.101 | 20.08 | 0.102 |
| | 256QAM | 1 | 0 | 18.02 | 0.063 | 17.92 | 0.062 | 17.98 | 0.063 |
| | | 1 | 25 | **18.40** | **0.069** | 18.35 | 0.068 | 18.32 | 0.068 |
| | | 1 | 49 | 18.07 | 0.064 | 18.15 | 0.065 | 18.19 | 0.066 |
| | | 25 | 0 | 17.90 | 0.062 | 18.10 | 0.065 | 18.12 | 0.065 |
| | | 25 | 12 | 18.07 | 0.064 | 18.01 | 0.063 | 18.12 | 0.065 |
| | | 25 | 25 | 17.98 | 0.063 | 18.00 | 0.063 | 18.05 | 0.064 |
| | | 50 | 0 | 18.01 | 0.063 | 18.05 | 0.064 | 18.06 | 0.064 |

| LTE Band 71 | | | | | | | | | |
|---|---|---|---|---|---|---|---|---|---|
| Bandwidth (MHz) | Modulation | RB Size | RB Offset | Conducted Output Power | | | | | |
| | | | | 133197 (670.5 MHz) | | 133297 (680.5 MHz) | | 133397 (690.5 MHz) | |
| | | | | (dBm) | (W) | (dBm) | (W) | (dBm) | (W) |
| 15 | QPSK | 1 | 0 | 23.22 | 0.210 | **23.24** | **0.211** | 22.93 | 0.196 |
| | | 1 | 36 | 22.88 | 0.194 | 23.08 | 0.203 | 22.92 | 0.196 |
| | | 1 | 74 | 22.83 | 0.192 | 22.96 | 0.198 | 22.92 | 0.196 |
| | | 36 | 0 | 22.26 | 0.168 | 21.90 | 0.155 | 22.00 | 0.158 |
| | | 36 | 18 | 22.28 | 0.169 | 21.99 | 0.158 | 21.98 | 0.158 |
| | | 36 | 37 | 22.22 | 0.167 | 22.02 | 0.159 | 22.04 | 0.160 |
| | | 75 | 0 | 22.28 | 0.169 | 21.93 | 0.156 | 22.02 | 0.159 |
| | 16QAM | 1 | 0 | 22.46 | 0.176 | 22.19 | 0.166 | 21.89 | 0.155 |
| | | 1 | 36 | 22.52 | 0.179 | 22.11 | 0.163 | **22.55** | **0.180** |
| | | 1 | 74 | 22.48 | 0.177 | 22.14 | 0.164 | 21.97 | 0.157 |
| | | 36 | 0 | 21.26 | 0.134 | 20.93 | 0.124 | 20.94 | 0.124 |
| | | 36 | 18 | 21.27 | 0.134 | 21.02 | 0.126 | 21.04 | 0.127 |
| | | 36 | 37 | 21.26 | 0.134 | 20.99 | 0.126 | 20.96 | 0.125 |
| | | 75 | 0 | 21.30 | 0.135 | 20.96 | 0.125 | 20.97 | 0.125 |
| | 64QAM | 1 | 0 | 21.45 | 0.140 | 21.34 | 0.136 | 20.95 | 0.124 |
| | | 1 | 36 | **21.52** | **0.142** | 21.13 | 0.130 | 21.24 | 0.133 |
| | | 1 | 74 | 21.39 | 0.138 | 21.19 | 0.132 | 21.11 | 0.129 |
| | | 36 | 0 | 20.21 | 0.105 | 19.99 | 0.100 | 20.00 | 0.100 |
| | | 36 | 18 | 20.23 | 0.105 | 20.02 | 0.100 | 19.97 | 0.099 |
| | | 36 | 37 | 20.34 | 0.108 | 19.99 | 0.100 | 19.93 | 0.098 |
| | | 75 | 0 | 20.32 | 0.108 | 20.05 | 0.101 | 20.02 | 0.100 |
| | 256QAM | 1 | 0 | 17.92 | 0.062 | 17.90 | 0.062 | 18.13 | 0.065 |
| | | 1 | 36 | 18.01 | 0.063 | 18.12 | 0.065 | **18.19** | **0.066** |
| | | 1 | 74 | 18.04 | 0.064 | 18.02 | 0.063 | 18.15 | 0.065 |
| | | 36 | 0 | 17.98 | 0.063 | 18.08 | 0.064 | 18.11 | 0.065 |
| | | 36 | 18 | 17.95 | 0.062 | 18.07 | 0.064 | 18.10 | 0.065 |
| | | 36 | 37 | 18.11 | 0.065 | 17.97 | 0.063 | 18.07 | 0.064 |
| | | 75 | 0 | 17.98 | 0.063 | 18.03 | 0.064 | 17.93 | 0.062 |

| LTE Band 71 | | | | | | | | | |
|---|---|---|---|---|---|---|---|---|---|
| Bandwidth (MHz) | Modulation | RB Size | RB Offset | Conducted Output Power | | | | | |
| | | | | 133222 (673.0 MHz) | | 133297 (680.5 MHz) | | 133372 (688.0 MHz) | |
| | | | | (dBm) | (W) | (dBm) | (W) | (dBm) | (W) |
| 20 | QPSK | 1 | 0 | 22.96 | 0.198 | 22.96 | 0.198 | 23.24 | 0.211 |
| | | 1 | 50 | 22.90 | 0.195 | 22.97 | 0.198 | 22.99 | 0.199 |
| | | 1 | 99 | 22.91 | 0.195 | **23.39** | **0.218** | 23.09 | 0.204 |
| | | 50 | 0 | 22.04 | 0.160 | 22.07 | 0.161 | 21.87 | 0.154 |
| | | 50 | 25 | 22.06 | 0.161 | 22.03 | 0.160 | 22.02 | 0.159 |
| | | 50 | 50 | 22.01 | 0.159 | 22.07 | 0.161 | 21.98 | 0.158 |
| | | 100 | 0 | 21.87 | 0.154 | 21.95 | 0.157 | 21.89 | 0.155 |
| | 16QAM | 1 | 0 | 22.00 | 0.158 | 22.01 | 0.159 | 22.11 | 0.163 |
| | | 1 | 50 | **22.40** | **0.174** | 22.26 | 0.168 | 22.31 | 0.170 |
| | | 1 | 99 | 22.32 | 0.171 | 22.06 | 0.161 | 22.31 | 0.170 |
| | | 50 | 0 | 21.04 | 0.127 | 20.87 | 0.122 | 21.06 | 0.128 |
| | | 50 | 25 | 21.16 | 0.131 | 20.86 | 0.122 | 21.05 | 0.127 |
| | | 50 | 50 | 21.12 | 0.129 | 20.97 | 0.125 | 21.07 | 0.128 |
| | | 100 | 0 | 21.15 | 0.130 | 20.93 | 0.124 | 20.99 | 0.126 |
| | 64QAM | 1 | 0 | 21.25 | 0.133 | 21.38 | 0.137 | 21.03 | 0.127 |
| | | 1 | 50 | 21.12 | 0.129 | 21.23 | 0.133 | 21.45 | 0.140 |
| | | 1 | 99 | 21.28 | 0.134 | 21.07 | 0.128 | **21.63** | **0.146** |
| | | 50 | 0 | 19.98 | 0.100 | 19.95 | 0.099 | 20.00 | 0.100 |
| | | 50 | 25 | 20.12 | 0.103 | 19.90 | 0.098 | 20.00 | 0.100 |
| | | 50 | 50 | 20.08 | 0.102 | 20.03 | 0.101 | 20.09 | 0.102 |
| | | 100 | 0 | 20.15 | 0.104 | 19.95 | 0.099 | 20.10 | 0.102 |
| | 256QAM | 1 | 0 | 17.94 | 0.062 | 18.20 | 0.066 | 17.83 | 0.061 |
| | | 1 | 50 | 18.34 | 0.068 | 18.08 | 0.064 | 18.10 | 0.065 |
| | | 1 | 99 | 18.27 | 0.067 | 18.15 | 0.065 | **18.35** | **0.068** |
| | | 50 | 0 | 17.99 | 0.063 | 18.04 | 0.064 | 18.06 | 0.064 |
| | | 50 | 25 | 18.02 | 0.063 | 18.01 | 0.063 | 18.09 | 0.064 |
| | | 50 | 50 | 17.99 | 0.063 | 18.08 | 0.064 | 18.13 | 0.065 |
| | | 100 | 0 | 18.02 | 0.063 | 18.10 | 0.065 | 18.11 | 0.065 |

# 4. Occupied Bandwidth

## 4.1. Limit

CFR 47, Section FCC §2.1049 and IC RSS-Gen Issue 5 6.7.

## 4.2. Test Procedure

**FCC**

The test follows section 5.4.4 of ANSI C63.26-2015.

a. The spectrum analyzer center frequency is set to the nominal EUT channel center frequency. The frequency span for the spectrum analyzer shall be set wide enough to capture all modulation. products including the emission skirts (typically a span of 1.5 × OBW is sufficient).
b. The nominal IF filter 3 dB bandwidth (RBW) shall be in the range of 1 % to 5 % of the anticipated OBW, and the VBW shall be set ≥ 3 × RBW.
c. Set the reference level of the instrument as required to prevent the signal amplitude from exceeding the maximum spectrum analyzer input mixer level for linear operation. See guidance provided in 4.2.3.
d. Set the detection mode to peak, and the trace mode to max-hold.
e. If the instrument does not have a 99 % OBW function, recover the trace data points and sum directly in linear power terms. Place the recovered amplitude data points, beginning at the lowest frequency, in a running sum until 0.5 % of the total is reached. Record that frequency as the lower OBW frequency. Repeat the process until 99.5 % of the total is reached and record that frequency as the upper OBW frequency. The 99 % power OBW can be determined by computing the difference these two frequencies.
f. The OBW shall be reported and plot(s) of the measuring instrument display shall be provided with the test report. The frequency and amplitude axis and scale shall be clearly labeled. Tabular data can be reported in addition to the plot(s).

**IC**

The test follows section 6.7 of RSS-Gen Issue 5.
The following conditions shall be observed for measuring the occupied bandwidth and x dB bandwidth:

• The transmitter shall be operated at its maximum carrier power measured under normal test conditions.
• The span of the spectrum analyzer shall be set large enough to capture all products of the modulation process, including the emission skirts, around the carrier frequency, but small enough to avoid having other emissions (e.g. on adjacent channels) within the span.
• The detector of the spectrum analyzer shall be set to “Sample”. However, a peak, or peak hold, may be used in place of the sampling detector since this usually produces a wider bandwidth than the actual bandwidth (worst-case measurement). Use of a peak hold (or “Max Hold”) may be necessary to determine the occupied / x dB bandwidth if the device is not transmitting continuously.
• The resolution bandwidth (RBW) shall be in the range of 1 % to 5 % of the actual occupied / x dB bandwidth and the video bandwidth (VBW) shall not be smaller than three times the RBW value. Video averaging is not permitted.

Note: It may be necessary to repeat the measurement a few times until the RBW and VBW are in compliance with the above requirement.

For the 99 % emission bandwidth, the trace data points are recovered and directly summed in linear power level terms. The recovered amplitude data points, beginning at the lowest frequency, are placed in a running sum until 0.5 % of the total is reached, and that frequency recorded. The process is repeated for the highest frequency data points (starting at the highest frequency, at the right side of the span, and going down in frequency). This frequency is then recorded. The difference between the two recorded frequencies is the occupied bandwidth (or the 99 % emission bandwidth).

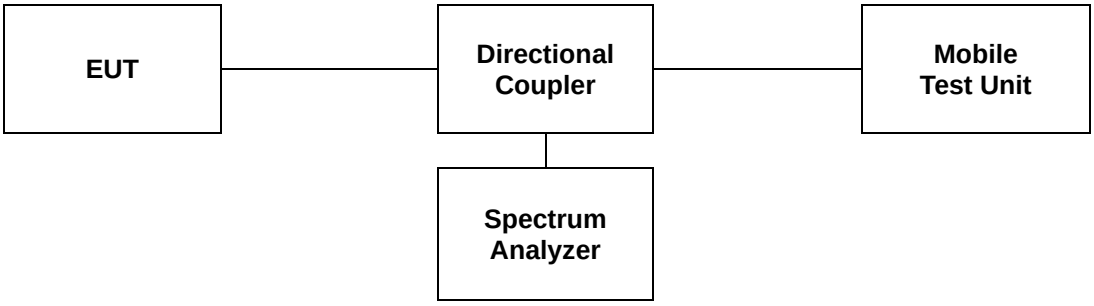

## 4.3 Test Results

Ambient temperature : (23 ± 1) ℃
Relative humidity : 47 % R.H.

**WCDMA**

| Band | Mode | Frequency (㎒) | Occupied Bandwidth (㎒) |
|---|---|---|---|
| WCDMA Ⅱ | RMC | 1 880.0 | 4.296 |
| | HSDPA | | 4.286 |
| WCDMA Ⅴ | RMC | 836.6 | 4.136 |
| | HSDPA | | 4.166 |

**LTE**

| Band | Bandwidth (㎒) | Frequency (㎒) | Occupied Bandwidth (㎒) | |
|---|---|---|---|---|
| | | | QPSK | 16QAM |
| 25/2 | 1.4 | 1 882.5 | 1.097 | 1.097 |
| | 3 | | 2.679 | 2.697 |
| | 5 | | 4.505 | 4.496 |
| | 10 | | 8.911 | 8.931 |
| | 15 | | 13.457 | 13.457 |
| | 20 | | 17.862 | 17.902 |
| 66/4 | 1.4 | 1 745 | 1.097 | 1.103 |
| | 3 | | 2.679 | 2.679 |
| | 5 | | 4.496 | 4.476 |
| | 10 | | 8.931 | 8.951 |
| | 15 | | 13.457 | 13.427 |
| | 20 | | 17.902 | 17.982 |
| 26/5 Part 22 | 1.4 | 836.5 | 1.091 | 1.097 |
| | 3 | | 2.685 | 2.679 |
| | 5 | | 4.496 | 4.496 |
| | 10 | | 8.951 | 8.931 |
| | 15 | 831.5 | 13.457 | 13.457 |
| 7 | 5 | 2 535 | 4.525 | 4.515 |
| | 10 | | 8.951 | 8.971 |
| | 15 | | 13.516 | 13.516 |
| | 20 | | 18.022 | 17.942 |
| 12 | 1.4 | 707.5 | 1.097 | 1.106 |
| | 3 | | 2.685 | 2.691 |
| 12/17 | 5 | | 4.505 | 4.515 |
| | 10 | | 8.931 | 8.951 |
| 13 | 5 | 782 | 4.476 | 4.515 |
| | 10 | | 8.931 | 8.971 |

| Band | Bandwidth (㎒) | Frequency (㎒) | Occupied Bandwidth (㎒) | |
|---|---|---|---|---|
| | | | QPSK | 16QAM |
| 26 Part 90 | 1.4 | 819 | 1.103 | 1.103 |
| | 3 | | 2.685 | 2.697 |
| | 5 | | 4.515 | 4.505 |
| | 10 | | 8.951 | 8.951 |
| | 15 | 821.5 | 13.487 | 13.516 |
| 71 | 5 | 680.5 | 4.505 | 4.515 |
| | 10 | | 8.931 | 8.931 |
| | 15 | | 13.427 | 13.487 |
| | 20 | | 17.862 | 17.862 |