LG
Life's Good

OWNER'S MANUAL

# MICROWAVE OVEN

Read this owner's manual thoroughly before operating the appliance and keep it handy for reference at all times.

**ENGLISH**

MVEF1323F

Barcode

MFL72075302
Rev.00_112923

www.lg.com

Copyright © 2023 LG Electronics Inc. All Rights Reserved.

# TABLE OF CONTENTS

## 3 IMPORTANT SAFETY INSTRUCTIONS

3 READ ALL INSTRUCTIONS BEFORE USE
3 WARNING

## 7 INSTALLATION

7 Product Overview
7 Installation Requirements

## 9 OPERATION

9 Control Panel
9 Before Use
12 Quick Start and Stop
12 Manual Cooking
12 Cooking Mode
17 Cookware Guide
18 Cooking Guide

## 21 SMART FUNCTIONS

21 LG ThinQ Application
22 Smart Diagnosis™ Feature

## 24 MAINTENANCE

24 Cleaning
25 Replacing Parts

## 26 TROUBLESHOOTING

26 FAQs
28 Before Calling for Service

## 30 LIMITED WARRANTY

30 USA

en-us_main.book.book Page 3 Wednesday, November 29, 2023 5:29 PM





# IMPORTANT SAFETY INSTRUCTIONS

## READ ALL INSTRUCTIONS BEFORE USE

### Safety Messages

**Your safety and the safety of others are very important.**

We have provided many important safety messages in this manual and on your appliance. Always read and follow all safety messages.

This is the safety alert symbol.

This symbol alerts you to potential hazards that can kill or injure you and others. All safety messages will follow the safety alert symbol and either the word WARNING or CAUTION.

These words mean:

**WARNING**

You may be killed or seriously injured if you do not follow instructions.

**CAUTION**

You may be injured or cause damage to the product if you do not follow instructions.

All safety messages will tell you what the potential hazard is, tell you how to reduce the chance of injury, and tell you what may happen if the instructions are not followed.

## WARNING

### WARNING

- To reduce the risk of explosion, fire, death, electric shock, injury or scalding to persons when using this product, follow basic precautions, including the following:

### Technical Safety

- This appliance is not intended for use by persons (including children) with reduced physical, sensory or mental capabilities, or lack of experience and knowledge, unless they have been given supervision or instruction concerning use of the appliance by a person responsible for their safety. Children should be supervised to ensure that they do not play with the appliance.
- To reduce the risk of burns, electric shock, fire, injury to persons or exposure to excessive microwave energy when using the microwave oven, read all instructions before using the appliance.
- Children must not be allowed to play with accessories or hang down from the door or any part of the oven. Doing so can cause serious injury and damage. As with any appliance, close supervision is necessary when used by children.
- This appliance must be grounded. Connect only to properly grounded outlet. See **“GROUNDING INSTRUCTIONS”** found on **Installation Requirements** section.
- Use this appliance only for its intended use as described in the manual. Do not use corrosive chemicals or vapors in this appliance. This type of oven is specifically designed to heat, cook, or dry food. It is not designed for industrial or laboratory use.
- To avoid electric shock:
  - Do not operate this appliance if it has a damaged cord or plug, if it is not working properly or if it has been damaged or dropped.
  - Do not immerse cord or plug in water. Keep cord away from heated surfaces.
  - Do not let cord hang over edge of table or counter.

en-us_main.book.book Page 4 Wednesday, November 29, 2023 5:29 PM



- To reduce the risk of fire in the oven cavity:
  - Do not overcook food. Carefully attend appliance when paper, plastic, or other combustible materials are placed inside the oven to facilitate cooking.
  - Remove wire twist-ties from paper or plastic bags before placing bag in oven.
  - If materials inside the oven ignite, keep oven door closed, turn oven off, and disconnect the power cord, or shut off power at the fuse or circuit breaker panel.
  - Do not use the cavity for storage purposes. Do not leave paper products, cooking utensils, or food in the cavity when not in use.
- Install or locate this appliance only in accordance with the provided installation instructions.
- Some products such as whole eggs and sealed containers – for example, closed glass jars – are able to explode and should not be heated in this oven.
- Liquids, such as water, coffee, or tea are able to be overheated beyond the boiling point without appearing to be boiling. Visible bubbling or boiling when the container is removed from the microwave oven is not always present.
- **THIS COULD RESULT IN VERY HOT LIQUIDS SUDDENLY BOILING OVER WHEN THE CONTAINER IS DISTURBED OR A SPOON OR OTHER UTENSIL IS INSERTED INTO THE LIQUID.**

  To reduce the risk of injury to persons:
  - Do not overheat the liquid. Stir the liquid both before and halfway through heating it.
  - Do not use straight-sided containers with narrow necks. Use extreme care when inserting a spoon or other utensil into the container.
  - After heating, allow the container to stand in the microwave oven for a short time before removing the container.
- Do not cover or block any openings on the appliance.
- Do not store this appliance outdoors. Do not use this product near water - for example, near a kitchen sink, in a wet basement, near a swimming pool, or similar locations.
- This appliance should be serviced only by qualified service personnel. Contact the nearest authorized service facility for examination, repair, or adjustment.
- When cleaning surfaces of door and oven that comes together on closing the door, use only mild, nonabrasive soaps or detergents applied with a sponge or soft cloth.

## Operation

- Do not use this oven for commercial purposes. It is made for household use only.
- Do not run the oven while it is empty.
- If your oven is dropped or damaged, have it thoroughly checked by a qualified service technician before using it again.
- Take care when the door is opened to avoid injury.
- To avoid improperly cooking some foods:
  - Do not heat any type of baby bottle or baby food. Uneven heating may occur and possibly cause personal injury.
  - Do not heat small-necked containers, such as syrup bottles.
  - Do not deep-fat fry in the microwave oven.
  - Do not attempt home canning in the microwave oven.
- Do not use the oven for the purpose of dehumidification (for example, operating the microwave oven with wet newspapers, clothes, toys, electric devices, plants, soil, pets or any other living matter inside it). The oven must only be used for heating or cooking food. The results of misuse can include safety risks such as fire, burns, or death due to electric shock.
- The appliance and its accessible parts become hot during use. Care should be taken to avoid touching heating elements inside the oven. Children must be kept away unless continuously supervised.

en-us_main.book.book Page 5 Wednesday, November 29, 2023 5:29 PM





- Do not use recycled paper products. They may contain impurities which may cause sparks and/or fires when used in cooking.
- The door or the outer surface may get hot when the appliance is operating.
- Liquids heated in certain shaped containers (especially cylindrical-shaped containers) may become overheated. The liquid may splash out with a loud noise during or after heating or when adding ingredients (instant coffee, etc.), resulting in harm to the oven and possible injury. In all containers, for best results, stir the liquid several times before heating. Always stir liquid several times between reheatings.

## Maintenance

- If the door or door seals are damaged, the oven must not be operated until it has been repaired by an authorized service person.
- The oven should be cleaned regularly and any food deposits should be removed. Failure to maintain the oven in a clean condition could lead to deterioration of the surface that could adversely affect the life of the appliance and possibly result in a hazardous situation.
- Do not rinse trays and racks by placing them in water immediately after cooking. This may cause breakage or damage. Improper use could result in damage to the oven.
- Oversized food or oversized metal utensils should not be inserted in a microwave oven as they may create a fire or risk of electric shock.
- Do not clean with metal scouring pads. Pieces can burn off the pad and touch electrical parts involving a risk of electric shock.
- Do not store any materials, other than manufacturer’s recommended accessories, in this oven when not in use.
- Do not cover racks or any other part of the oven with metal foil. This will cause overheating of the oven.

## Microwave Oven

- Must be installed following the provided installation instructions.
- Secure the cord in the cabinet above the oven.
- Do not tamper with the built-in safety switches on the oven door. The oven has several built-in safety switches to make sure the power is off when the door is open.
- Preserve the oven floor:
  - Do not heat the oven floor excessively.
  - Do not allow the gray film on special microwave-cooking packages to touch the oven floor. Put the package on a microwavable dish.
  - Do not cook anything directly on the oven floor or turntable. Use a microwavable dish.
- Keep a browning dish at least 3/16 inch above the oven floor. Carefully read and follow the instructions for the browning dish. If you use a browning dish incorrectly, you could damage the oven floor.

## Ventilation

- Burn Hazard: If a range or cooktop located below the microwave is operating, use caution when operating the microwave. **External components of the microwave may become very hot and cause burns or other injury if touched**.
- Clean Ventilating Hoods Frequently – Grease should not be allowed to accumulate on hood or filter.
- When flaming foods under the hood, turn the fan on.
- Use care when cleaning the vent-hood filter. Corrosive cleaning agents, such as lye-based oven cleaners, may damage the filter.
- Suitable for use above both gas and electric cooking equipment 36 inches wide or less.

en-us_main.book.book Page 6 Wednesday, November 29, 2023 5:29 PM



## Radio/TV/Wireless Equipment Interference

- Operating the microwave oven near equipment-such as a radio, TV, wireless LAN, Bluetooth devices, medical equipment, or wireless equipment which uses the same frequency, may cause interference. This interference is not an indication of a defect in the product or its operation. The product is safe to use.
- Do not use medical equipment near the microwave oven, as the interference could affect the medical equipment's operation.
- When there is interference, it may be reduced or eliminated by taking the following measures:
  - Clean the door and the sealing surfaces of the oven.
  - Reorient the receiving antenna of the radio, TV, Bluetooth, or other equipment.
  - Relocate the microwave oven in relation to the radio, TV, Bluetooth, or other equipment.
  - Move the microwave oven away from the receiver.
  - Plug the microwave oven into a different outlet so that the microwave oven and receiver are on different branch circuits

## FEDERAL COMMUNICATIONS COMMISSION RADIO FREQUENCY INTERFERENCE STATEMENT (U.S.A. ONLY)

- This equipment generates and uses ISM frequency energy and if not installed and used properly, that is in strict accordance with the manufacturer's instructions, may cause interference to radio and television reception. It has been type tested and found to comply with limits for ISM Equipment pursuant to part 18 of FCC Rules, which are designed to provide reasonable protection against such interference in a residential installation. However, there is no guarantee that interference will not occur in a particular installation. If this equipment does cause interference to radio or television reception, which can be determined by turning the equipment off and on, the user is encouraged to try to correct the interference by one or more of the following:
  - Reorient the receiving antenna of the radio or television.
  - Relocate the microwave oven with respect to the receiver.
  - Move the microwave oven away from the receiver.
  - Plug the microwave oven into a different outlet so that the microwave oven and the receiver are on different branch circuits.
- The manufacturer is not responsible for any radio or TV interference caused by unauthorized modification to this microwave oven. It is the responsibility of the user to correct such interference.

# SAVE THESE INSTRUCTIONS

en-us_main.book.book Page 7 Wednesday, November 29, 2023 5:29 PM





# INSTALLATION

## Product Overview

### Front View

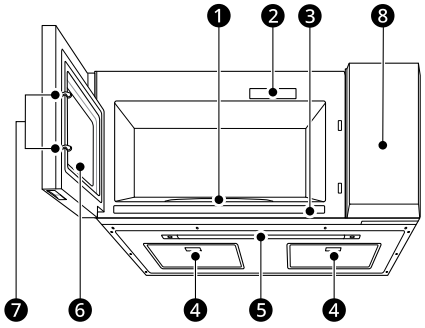


1. Glass Turntable
2. Location of Model Number
3. Cooking Guide
4. Grease Filter
5. Cooktop Light
6. Window with Metal Shield
7. Safety Door Lock System

### Accessories

Accessories will vary depending on the model purchased.

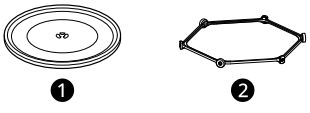


1. Glass Tray
2. Rotating Ring

**⚠ WARNING**

- Do not operate the oven when it is empty or without the glass tray. It is best to leave a glass of water in the oven when not in use. The water will safely absorb all microwave energy, if the oven is accidentally started.

**⚠ CAUTION**

- To avoid risk of personal injury or property damage, do not use stoneware, metal cookware, or metal rimmed cookware in the oven.
- Keep aluminum foil at least 1 inch from the oven walls and other pieces of foil. Foil can cause arcing if it gets too close to the oven walls during cooking.

**NOTE**

- This microwave oven is designed for household use only. It is not recommended for commercial use.
- Do not overcook food. The microwave oven can be damaged.
- A beep sounds each time you press a key. A melody signals the end of a timer or a cooking cycle.

### Specifications

**MVEF1323F Model**

- **Power Supply**: 120 V AC, 60 Hz
- **Rated Power Consumption**: 1800 W (Microwave oven with cooktop lamp and ventilation fan)
- **Microwave Output**: Max. 1000 W†
- **Rated Current**: 15 A
- **Dimensions (W x H x D)**: 29 7/8 x 11 15/16 x 19 1/8 inches
- **Dimensions of Oven Cavity (W x H x D)**: 19 13/16 x 8 3/8 x 13 1/8 inches
- **Capacity of Oven Cavity**: 1.3 cu.ft.
- **Net Weight**: 55.51 lbs

† IEC 60705 RATING STANDARD. Specifications are subject to change without prior notice.

## Installation Requirements

### Installation Location

Make sure you have enough space and support.

- Mount the oven against a flat, vertical wall, so it is supported by the wall. The wall should be constructed of a minimum of 2" x 4" wood studding and 3/8" thick drywall or plaster/lath.
- Attach the 2 lag screws supporting the oven to a vertical, 2" x 4" wall stud.
- DO NOT mount the microwave oven to an island or peninsula cabinet.

en-us_main.book.book Page 8 Wednesday, November 29, 2023 5:29 PM



- Be sure that the upper cabinet and rear wall structures can support 150 lb. plus the weight of any items you place inside the oven or upper cabinet.
- Locate the oven away from areas with strong drafts, such as near windows, doors, and large heating vents.
- Make sure that you have enough space. See the clearance diagrams in the installation manual for the minimum vertical and horizontal clearances.
- Refer to the **Installation Instructions** for details.

### Electrical Requirements

The oven is designed to operate on a standard 120 V/60 Hz household outlet. Be sure that the circuit is at least 15 A or 20 A and the microwave oven is the only appliance on the circuit. It is not designed for 50 Hz or any circuit other than a 120 V/60 Hz circuit. No other electrical appliances or lighting circuits should be on this line. If in doubt, consult a licensed electrician.

### Voltage Warning

The voltage used at the wall socket must be the same as specified on the oven name plate located on the back or on the side of the control panel of the oven. Using a higher voltage is dangerous and may result in a fire or other type of accident causing oven damage. Low voltage will cause slow cooking. If the microwave oven does not perform normally in spite of proper voltage, unplug and reconnect the power cord.

### Do Not Block Air Vents

All air vents should be kept clear during cooking. If air vents are covered during oven operation the oven may overheat. To prevent damage to the oven, a sensitive safety device detects overheating and automatically turns the oven off. The oven cannot be used until it has cooled sufficiently.

## Grounding Instructions

This appliance must be grounded. In the event of an electrical short circuit, grounding reduces the risk of electric shock by providing an escape wire for the electric current. This appliance is equipped with a cord having a grounding wire with a grounding plug. The plug must be plugged into an outlet that is properly installed and grounded.

- Consult a qualified electrician or service person if the grounding instructions are not completely understood, or if doubt exists as to whether the appliance is properly grounded.
  - Do not use an extension cord. If the power supply cord is too short, have a qualified electrician or serviceman install an outlet near the appliance.
- Ensure that the product is properly grounded before use.

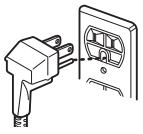

- Keep the electrical power cord dry and do not pinch or crush it in any way.
- For a permanently connected appliance:

  This appliance must be connected to a grounded, metallic, permanent wiring system, or an equipment grounding conductor should be run with the circuit conductors and connected to the equipment grounding terminal or lead on the appliance.

**⚠ WARNING**

- Improper use of the grounding can result in a risk of electric shock.
- Do not use an extension cord. If the power supply cord is too short, have a qualified electrician or service man install an outlet near the appliance.
- A short power supply cord is provided to reduce the risks resulting from becoming entangled in or tripping over a longer cord.

**NOTE**

- Because this appliance fits under the cabinet, it has a short power supply cord. See the separate installation instructions for directions on properly placing the cord.

en-us_main.book.book Page 9 Wednesday, November 29, 2023 5:29 PM





# OPERATION

## Control Panel

### Control Panel Features

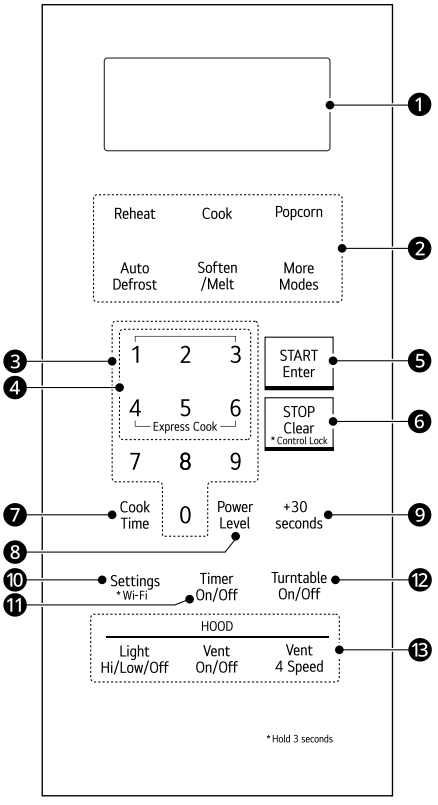


❶ **Display**

- Shows the time of day, cook time settings, and selected cooking functions.

❷ **Cooking Mode**

- Select various microwave cooking functions. See **Manual Cooking** section and **Cooking Mode** section.

❸ **Number Keys**

- Set cooking time, power level or quantity or weight.

❹ **Number Keys 1-6 (Express Cook)**

- Start the microwave function without pressing the **START/Enter** button.
- Press **3** to cook for 3 minutes at high.

❺ **START/Enter**

- Start the oven or enter amounts.

❻ **STOP/Clear**

- Stop the oven or clear all entries.

**Control Lock**

- Press and hold **STOP/Clear** for 3 seconds to lock the control panel.

❼ **Cook Time**

- Press **Cook Time** to enter the cooking time.

❽ **Power Level**

- Press **Power Level** to adjust the power level.

❾ **+30 seconds**

- Start cooking without pressing the **START/Enter** button.
- Press **+30 seconds** to cook for 30 seconds at high.
- Press **+30 seconds** during cooking to increase the cook time by 30 seconds. (Add up to 99 minutes and 59 seconds)

❿ **Settings**

- Use to change the default setting for sound, clock, scroll speed and defrost weight.

**Wi-Fi**

- Press and hold **Settings** for 3 seconds to connect to a Wi-Fi network.

⓫ **Timer On/Off**

- Use your microwave oven as a kitchen timer.

⓬ **Turntable On/Off**

- Press **Turntable On/Off** to turn or stop the turntable.

⓭ **HOOD Functions**

- To set the light, press **Light Hi/Low/Off** to adjust the cooktop light.
- To set the ventilation:
  - Press **Vent On/Off** to turn the vent fan on or off.
  - Press **Vent 4 Speed** to set the vent fan speed.

## Before Use

### Setting the Clock

Set the current time to operate the microwave oven.

**1** Press **Settings**.

en-us_main.book.book Page 10 Wednesday, November 29, 2023 5:29 PM



2 Press **1** to select **Clock Setting**.

3 Press the number keys to set the correct time of day, and press **START/Enter**.

4 Press **1** to select AM, or **2** to select PM.

5 Press **START/Enter**.

**NOTE**

- To reset the clock mode, unplug the power cord and plug it back in.

## Child Lock

Use this safety feature to lock the control panel before cleaning the oven or to prevent children from unsupervised use of the oven.

### Setting Child Lock to ON

1 Press **STOP/Clear**.

2 Press and hold **STOP/Clear** until **LOCKED** appears in the display (approximately 3 seconds).

### Canceling Child Lock

Press and hold **STOP/Clear** until **LOCKED** disappears in the display (approximately 3 seconds).

**NOTE**

- If the oven is locked, **LOCKED** appears in the display when any key is pressed.
- Unlock the oven to resume normal use.

## Kitchen Timer

The Timer function serves as an extra kitchen timer up to 99 minutes, 99 seconds. It chimes when the set time runs out. It does not start or stop cooking.

### Setting Timer for 3 Minutes

1 Press **Timer On/Off**.

2 Press the number keys to set the time (**3**, **0**, and **0**), and press **Timer On/Off**.

- The timer starts immediately and the time counts down in the display.

3 To cancel the timer, press **Timer On/Off**.

**NOTE**

- When the time is over, the oven beeps continuously until you press **Timer On/Off**.

## Setting the Cooktop Light

Use the Light settings to adjust the light for the cooktop below the microwave.

1 Press **Light Hi/Low/Off** once to set the light to high.

2 Press **Light Hi/Low/Off** again to set the light to low.

3 Press **Light Hi/Low/Off** to turn the light off.

## Setting Ventilation Functions

Use this button to set the vent fan speed. The vent removes steam and other vapors from the cooking surface.

### Turning the Vent Fan On or Off

1 Press **Vent On/Off** once to turn the vent fan on.

2 Press **Vent On/Off** again to turn the vent fan off.

### Setting the Vent Fan Speed

When the fan is on, press **Vent 4 Speed** repeatedly to change the vent fan speed.

- The fan speed will change in sequence from High to Turbo, Low, Medium and back to High.
- The vent fan maintains the last setting if turned off and on again.

en-us_main.book.book Page 11 Wednesday, November 29, 2023 5:29 PM





**NOTE**

- Turn the microwave's vent fan on whenever you use the cooktop below it. The fan captures smoke, steam, and odors and also prevents the heat from the cooktop from damaging microwave components.
- If the microwave is cooking, the vent fan turns on automatically if the sensors detect too much heat from the cooktop. This is designed to prevent microwave component damage.

## Custom Setting

Adjust the default values for beep sound, clock, scroll speed and defrost weight.

### Setting Menu

Refer to the information below to adjust the settings.

| Item | Option |
|---|---|
| **1 Clock Setting** | • **1 AM**<br>• **2 PM** |
| **2 Sound** | • **1 Sound On**<br>• **2 Sound Off** |
| **3 Clock** | • **1 Clock On**<br>• **2 Clock Off** |
| **4 Scroll Speed** | • **1 Slow**<br>• **2 Normal**<br>• **3 Fast** |
| **5 Defrost Weight** | • **1 Lbs**<br>• **2 Kg** |
| **6 Wi-Fi** | • **1 Wi-Fi On**<br>• **2 Wi-Fi Off** |

### Setting the Defrost Weight from Lbs to Kg

**1** Press **Settings**.

**2** Use the number keys to select **5** and **2**.

## Microwave Power Levels

This microwave oven is equipped with 10 power levels to give you maximum flexibility and control over cooking.

- When operating at 100% power levels for prolonged periods, the output power will be reduced gradually to help prevent the unit from electrically overheating.

| Power Level | Use |
|---|---|
| **High 10** (100 %) | • Boiling water.<br>• Browning ground beef.<br>• Making candy.<br>• Cooking poultry pieces, fish & vegetables.<br>• Cooking tender cuts of meat. |
| **9** (90%) | • Reheating rice, pasta & vegetables. |
| **8** (80%) | • Reheating prepared foods quickly.<br>• Reheating sandwiches. |
| **7** (70%) | • Cooking egg, milk and cheese dishes.<br>• Melting chocolate. |
| **6** (60%) | • Cooking veal.<br>• Cooking whole fish.<br>• Cooking puddings and custard. |
| **5** (50%) | • Cooking ham, whole poultry and lamb.<br>• Cooking rib roast and sirloin tip. |
| **4** (40%) | • Thawing meat, poultry and seafood. |
| **3** (30%) | • Cooking less tender cuts of meat.<br>• Cooking pork chops and roasts. |
| **2** (20%) | • Taking the chill out of fruit.<br>• Softening butter. |
| **1** (10%) | • Keeping casseroles and main dishes warm.<br>• Softening butter and cream cheese. |
| **0** (0%) | • Standing time |

## Wi-Fi

Connect the appliance to a home Wi-Fi network to use smart functions. See **SMART FUNCTIONS** for more details. Wi-Fi on the appliance can be turned on or off within the Settings menu.

en-us_main.book.book Page 12 Wednesday, November 29, 2023 5:29 PM



### Setting Up Wi-Fi

1 Press **Settings**.

2 Press **6** to select **Wi-Fi**.

3 Press **1** to set the **Wi-Fi ON**.

4 Press **2** to set the **Wi-Fi OFF**.

**NOTE**

- The Wi-Fi icon on the display shows the status of the appliance's network connection. If the Wi-Fi icon is not shown, use the smart phone app to select the Wi-Fi network or connect the product again.

# Quick Start and Stop

## Using Quick Start

This feature allows you to start the microwave function without pressing the **START/Enter** button.

### Cooking for 2 Minutes on High Power

Press **+30 seconds** four times.

- The oven starts immediately and the time counts down in the display.
- Press **+30 seconds** repeatedly to extend the cook time by 30 seconds every time the button is pressed (up to 99 min 59 seconds).

### Interrupting Cooking

- To stop the oven during a cycle, open the door or Press **STOP/Clear** once.
- To restart cooking, close the door and press **START/Enter**.
- To stop the oven and clear the settings during a cycle, press **STOP/Clear** twice.

# Manual Cooking

## Using Manual Cooking

Unless you are using the auto cooking functions, the cook time and power level must be set manually.

### Cooking for 5 Minutes, 30 Seconds at 80% Power

1 Press **Cook Time**.

2 Press the number keys to set the cook time (**5:30**).

3 Press **Power Level**.

4 Press **8** to select power level 8, and press **START/Enter**.

- When cooking is complete, a chime sounds and **COOK END** appears in the display window.

**NOTE**

- If a power level is not selected, the oven defaults to 100% power.

### Using Express Cook

Press the **1** through **6** number buttons to immediately start the microwave function on High for the selected number of minutes.

### Cooking for 3 Minutes at High

1 Press **3** to start cooking

- When cooking is complete, a chime sounds and **COOK END** appears in the display window.

# Cooking Mode

Cook your favorite foods without having to select cooking times and power levels.

## Reheat Mode

This feature reheats single servings of previously cooked foods or a plate of leftovers.

1 Press **Reheat**.

2 Use the number keys to enter the desired menu code from the **Reheat Menu**.

en-us_main.book.book Page 13 Wednesday, November 29, 2023 5:29 PM





**3** Use the number keys to enter the desired amounts.

**4** Press **START/Enter**.

- When the cook time ends, a melody sounds and **COOK END** appears in the display cycle.

**NOTE**

- Do not use recycled paper products in the microwave oven. They sometimes contain impurities that cause arcing and sparking.

## Reheat Menu

Refer to the information below to set the desired menu item and see the recommended amounts.

- **1 Dinner Plate** (1 - 2 servings)
  - Cookware: Microwave-safe plate
  - Food temperature: Refrigerated
  - Instructions: Cover with lid or vented plastic wrap. After cooking, let stand for 3 minutes.
- **2 Soup / Sauce** (1 - 4 cups)
  - Cookware: Microwave-safe bowl
  - Food temperature: Refrigerated
  - Instructions: Cover with vented plastic wrap. After cooking, stir and let stand for 3 minutes.
- **3 Pizza** (1 - 3 slices)
  - Cookware: Microwave-safe dish
  - Food temperature: Refrigerated
  - Instructions: Unwrap and place food on a microwave-safe dish.
- **4 Casserole** (1 - 4 cups)
  - Cookware: Microwave-safe bowl
  - Food temperature: Refrigerated
  - Instructions: Cover with vented plastic wrap. After cooking, let stand for 3 minutes.

**NOTE**

- Use to reheat lasagna or other casseroles. Cook time will vary depending on ingredients.

- **5 Beverage** (1 - 2 cups (240 ml/cup))
  - Cookware: Microwave-safe cup
  - Food temperature: Room
  - Instructions: Pour beverage into a mug or microwave-safe cup. After cooking, stir to complete reheating.

**⚠ WARNING**

- Be careful when handling the container. Microwave heating of beverages can result in delayed eruptive boiling. Therefore, care must be taken when handing the container.

- **6 Baked Goods** (1 - 4 pieces)
  - Cookware: Paper towel
  - Food temperature: Room
  - Instructions: Place on paper towel. Do not cover.

**⚠ WARNING**

- Be careful when handling containers. Microwave heating of beverages can result in delayed eruptive boiling. Therefore, care must be taken when handling containers.

## Auto Cook Mode

Cook your favorite foods automatically using preset programs.

**1** Press **Cook**.

**2** Use the number keys to enter the desired menu code from the **Cook Menu**.

**3** Use the number keys to enter the desired amounts.

**4** Press **START/Enter**.

- When the cook time ends, a melody sounds and **COOK END** appears in the display cycle.

## Auto Cook Menu

Refer to the information below to set the desired menu item and see the recommended amounts.

- **1 Potato** (1 - 4 potatoes (7 - 9 oz/ea))
  - Cookware: Paper towel
  - Food temperature: Room
  - Instructions: Pierce skin with a fork and place on paper towel. Do not cover. After cooking, let stand for 5 minutes.
- **2 Rice** (0.5 - 2 cups)
  - Cookware: Deep and large microwave-safe bowl

en-us_main.book.book Page 14 Wednesday, November 29, 2023 5:29 PM



- Food temperature: Room
- Instructions: Put the rice and water in the bowl as below.

  Rice 0.5 cup (96 g), water 1-1/3 cups (314 g)

  Rice 1 cup (192 g), water 2-1/4 cups (531 g)

  Rice 1.5 cups (288 g), water 3-1/4 cups (789 g)

  Rice 2 cups (384 g), water 4-1/2 cups (1062 g)

  Cover with vented plastic wrap. After cooking, let stand 5-10 minutes.

- **3 Frozen vegetable** (1 - 4 cups)
  - Cookware: Microwave-safe bowl
  - Food temperature: Frozen
  - Instructions: Add water (1 - 2 cups: 2 tbsp water, 3 - 4 cups: 4 tbsp water). Cover with vented plastic wrap. After cooking, let stand for 3 minutes.
- **4 Fresh vegetable (Hard)** (1 - 4 cups)
  - Cookware: Microwave-safe bowl
  - Food temperature: Refrigerated
  - Instructions: Add water (1 - 2 cups: 2 tbsp water, 3 - 4 cups: 4 tbsp water). Cover with vented plastic wrap. After cooking, let stand for 3 minutes.
- **5 Fresh vegetable (Soft)** (1 - 4 cups)
  - Cookware: Microwave-safe bowl
  - Food temperature: Refrigerated
  - Instructions: Add water (1 - 2 cups: 2 tbsp water, 3 - 4 cups: 4 tbsp water). Cover with vented plastic wrap. After cooking, let stand for 3 minutes.
- **6 Canned vegetable** (1 - 4 cups)
  - Cookware: Microwave-safe bowl
  - Food temperature: Room
  - Instructions: Cover with vented plastic wrap. After cooking, stir and let stand for 3 minutes.
- **7 Boiling Water** (1 - 2 cups (240 ml/cup))
  - Cookware: Microwave-safe cup
  - Food temperature: Room
  - Instructions: After cooking, stir to complete reheating.

**⚠ WARNING**

- Be careful when handling the container. Microwave heating of beverages can result in delayed eruptive boiling. Therefore, care must be taken when handling the container.

- **8 Chicken Pieces** (4 - 32 oz)
  - Cookware: Microwave-safe plate
  - Food temperature: Refrigerated
  - Instructions: Cover with vented plastic wrap. After cooking, let stand for 3 minutes.
- **9 Frozen Lasagna** (10 - 21 oz)
  - Food temperature: Frozen
  - Instructions: Remove outer packaging. Slit cover. If not in a microwave-safe container, transfer it to a microwave-safe plate covered with vented plastic wrap. After cooking, let stand in microwave oven for 3 minutes.
- **10 Fish Fillets** (4 - 16 oz)
  - Cookware: Microwave-safe plate
  - Food temperature: Refrigerated
  - Instructions: Cover with vented plastic wrap. After cooking, let stand for 5 minutes.
- **11 Casserole** (1 - 4 cups)
  - Cookware: Microwave-safe bowl
  - Food temperature: Room
  - Instructions: Cover with vented plastic wrap. After cooking, let stand for 3 minutes.
- **12 Shrimp** (4 - 16 oz)
  - Cookware: Microwave-safe plate
  - Food temperature: Refrigerated
  - Instructions: Cover with vented plastic wrap. After cooking, let stand for 2 minutes.

## Popcorn Mode

Prepare microwave popcorn simply and easily, one bag at a time.

**1** Press **Popcorn** repeatedly to enter the desired amount. Then press **START/Enter**.

- When the cook time ends, a melody sounds and **COOK END** appears in the display.

**⚠ CAUTION**

- Only pop popcorn in a microwavable container or in commercial packages designed for microwave ovens.
- Do not reuse popcorn bags.
- Do not leave microwave unattended while popping corn.
- Follow directions on bag.

### Popcorn Menu

Refer to the information below to set the desired menu item and see the recommended amounts.

en-us_main.book.book Page 15 Wednesday, November 29, 2023 5:29 PM





- **Popcorn** (3.0 - 3.5 oz)
  - Pop only one package at a time. For best results, use a fresh bag of popcorn. Place a bag of prepackaged microwave popcorn on the center of the glass tray.

## Auto Defrost Mode

### Using Defrost Menu

The oven has 4 preset defrost cycles. The **Defrost Menu** shows the suggested defrost cycle for various foods.

**1** Press **Auto Defrost**.

**2** Use the number keys to enter the desired menu code from the **Auto Defrost Menu**.

**3** Use the number keys to enter the desired amounts.

**4** Press **START/Enter**.

- At the chime, open the oven door and turn the food over. Remove any food that has thawed. Return the items which are still frozen to the oven, and press **START/Enter** to complete the defrost cycle.

**NOTE**

- The countdown appears in the display after **START/Enter** is pressed. The oven chimes once during the defrost cycle.
- When using Defrost, enter the net weight in pounds and tenths of pounds (the weight of the food minus the container).

### Defrost Menu

Refer to the information below to set the desired menu item and see the recommended amounts.

- **1 Meat** (0.1 - 6.0 lbs)
  - Beef: Ground beef, round steak, stew cubes, tenderloin steak, pot roast, rib roast, rump roast, chuck roast, hamburger patties
  - Lamb: Chops (1 inch thick), rolled roast
  - Pork: Chops (0.5 inch thick), hot dogs, spareribs, country-style ribs, rolled roast, sausage
  - Veal: Cutlets (1 lb, 0.5 inch thick)

  When the oven beeps, turn food over. After defrosting, let stand for 5-15 minutes.
- **2 Poultry** (0.1 - 6.0 lbs)
  - Poultry: Whole, cut-up, breast (boneless)

    Rinse chicken cavity with tap water and let stand for 60 minutes after cooking for better results.
  - Cornish hens: Whole
  - Turkey: Breast

  When the oven beeps, turn food over. After defrosting, let stand for 30 minutes.
- **3 Bread** (0.1 - 1.0 lbs)
  - Muffins, rolls, cake

  When the oven beeps, turn food over. After defrosting, let stand for 1-2 minutes.
- **4 Fish** (0.1 - 6.0 lbs)
  - Fish: Fillets, whole steaks
  - Shellfish: Crab meat, lobster tails, shrimp, scallops

  When the oven beeps, turn food over. After defrosting, let stand for 5-10 minutes.

## Soften/Melt Mode

### Soften Mode

The oven uses low power to soften foods (butter, ice cream, cream cheese, frozen juice).

**1** Press **Soften/Melt** once.

**2** Use the number keys to enter the desired menu code from the **Soften Menu**.

**3** Use the number keys to enter the desired amounts from the **Soften Menu**.

**4** Press **START/Enter**.

- When the cook time ends, a melody sounds and **COOK END** appears in the display.

### Soften Menu

Refer to the information below to set the desired menu item and see the recommended amounts.

- **1-1 Butter** (½, 1, 2 or 3 sticks (4 oz/1 stick))
  - Cookware: Microwave-safe dish
  - Food temperature: Refrigerated

en-us_main.book.book Page 16 Wednesday, November 29, 2023 5:29 PM



- Instructions: Unwrap and place food in oven. Butter will be at room temperature and ready for use in a recipe.

- **1-2 Ice Cream** (Pint, Quart, Half Gallon)
  - Food temperature: Frozen
  - Instructions: Remove lid and cover. Place food in oven. Ice cream will be soft enough to make scooping easier.
- **1-3 Cream Cheese** (3 or 8 oz)
  - Cookware: Microwave-safe dish
  - Food temperature: Refrigerated
  - Instructions: Unwrap and place food in oven. Cream cheese will be at room temperature and ready for use in a recipe.
- **1-4 Frozen Juice** (6, 12 or 16 oz)
  - Food temperature: Frozen
  - Instructions: Remove top. Frozen juice will be soft enough to mix easily with water.

## Melt Mode

The oven uses low power to melt foods (butter, chocolate, cheese, marshmallows).

1. Press **Soften/Melt** twice.
2. Use the number keys to enter the desired menu code from the **Melt Menu**.
3. Use the number keys to enter the desired amounts from the **Melt Menu**.
4. Press **START/Enter**.
   - When the cook time ends, a melody sounds and **COOK END** appears in the display.

## Melt Menu

Refer to the information below to set the desired menu item and see the recommended amounts.

- **2-1 Butter** (½, 1, 2 or 3 sticks (4 oz/1 stick))
  - Cookware: Microwave-safe bowl
  - Food temperature: Refrigerated
  - Instructions: Unwrap and place food in oven. After heating, stir to complete melting.
- **2-2 Chocolate** (4 or 8 oz)
  - Cookware: Microwave-safe bowl
  - Food temperature: Room
  - Instructions: Chocolate chips or squares of baking chocolate may be used. Unwrap and place food in oven. After heating, stir to complete melting.
- **2-3 Cheese** (8 or 16 oz)
  - Cookware: Microwave-safe bowl
  - Food temperature: Refrigerated
  - Instructions: Use processed cheese food only. Unwrap and cut into cubes. Place food in oven. Stir the food at the beep. After heating, stir to complete melting.
- **2-4 Marshmallow** (5 or 10 oz)
  - Cookware: Microwave-safe bowl
  - Food temperature: Room
  - Instructions: Unwrap and place food in oven. After heating, stir to complete melting.

# More Modes

The product firmware may be updated to include additional functions through **More Modes**.

The modes currently include the Kids Meal function.

## Kids Meal Mode

This function has preset cook settings for popular foods for kids.

1. Press **More Modes**.
2. Press **1** to select **Kids Meal** mode.
3. Use the number keys to enter the desired menu code from the **Kids Meal Menu**.
4. Use the number keys to enter the desired amounts from the **Kids Meal Menu**.
5. Press **START/Enter**.
   - At the beep, carefully remove the bowl from the oven and add the rice or pasta. Loosely cover with a lid or plastic wrap and carefully place the bowl back in the oven. Press **START/Enter**.
   - When the cook time ends, a melody sounds and **COOK END** appears in the display.

en-us_main.book.book Page 17 Wednesday, November 29, 2023 5:29 PM





### Kids Meal Menu

Refer to the information below to set the desired menu item and see the recommended amounts.

- **1-1 Mac & Cheese** (6 or 12 oz)
  - Cookware: Microwave-safe dish
  - Food temperature: Refrigerated
- **1-2 Chicken Nuggets** (4 or 8 oz)
  - Cookware: Microwave-safe dish
  - Food temperature: Frozen
- **1-3 Corn Dog** (2 or 4 ea (2 - 2.5 oz/ea))
  - Cookware: Microwave-safe dish
  - Food temperature: Refrigerated

# Cookware Guide

## Microwave-Safe Cookware

Use microwavable cookware.

- **Ovenproof Glass**
  - Ovenproof glassware that is treated for high intensity heat so it is heat-resistant is microwave-safe.
  - Use utility dishes, loaf dishes, pie plates, cake plates, liquid measuring cups, casseroles and bowls without metal rims.
  - Do not use delicate glassware, such as tumblers or wine glasses, as these might shatter when heated.
- **China**
  - Use bowls, cups, serving plates, pottery, stoneware, ceramic, and platters without metal rims or handles. Many containers made of these materials are microwave-safe, but test them before use.
- **Plastic**
  - **Plastic Storage Containers**: Use plastic dishes, cups, semi-rigid freezer containers and plastic bags only for short cooking times. Do not use them when cooking food for long periods or at high power levels, as the hot food will eventually warp or melt the plastic.
  - **Plastic wrap (as a cover)**: Lay the plastic wrap loosely over the dish and press it to the sides. Vent plastic wrap by turning back one edge slightly to allow excess steam to escape. The dish should be deep enough so that the plastic wrap will not touch the food. As the food heats it may melt the plastic wrap wherever the wrap touches the food.
  - **Plastic Cooking Bags**: Provided they are specially made for cooking, cooking bags are microwave safe. Remember to make a slit in the bag so that steam can escape. Never use ordinary plastic bags for cooking in the microwave oven, as they will melt and rupture.
  - **Plastic Microwave Cookware**: A variety of shapes and sizes of microwave cookware are available. You may be able to use items you already have on hand rather than investing in new kitchen equipment.
- **Paper**
  - Use paper towels, waxed paper, paper napkins, and paper plates with no metal rims or design. Look for the manufacturer's label for use in the microwave oven.
  - Paper plates and containers are convenient and safe to use in the microwave oven, provided that the cooking time is short and the foods to be cooked are low in fat and moisture. Paper towels are also very useful for wrapping foods and for lining baking trays in which greasy foods such as bacon are cooked.
  - Avoid colored paper products as the color may run. Do not use recycled paper products in the microwave oven. They may contain impurities which could cause arcing or fires when used in the microwave.
- **Tableware**
  - Many containers made of pottery, stoneware and ceramic are also microwave-safe. If in doubt consult the manufacturer's literature or perform the microwave test.
  - Do not put plates with painted decoration in the oven, as the paint may contain metal and cause arcing.

## Microwave-Unsafe Cookware

- **Metal Containers/Metal Decoration**
  - Never use metal or metal-rimmed cookware in the microwave oven.
  - Microwaves cannot penetrate metal. They will bounce off any metal object in the oven and cause arcing, an alarming phenomenon that resembles lightning.
  - Metal shields the food from microwave energy and produces uneven cooking. Also avoid metal skewers, thermometers, foil trays, metal-rimmed or metal-banded dinnerware, casserole dishes, etc. The metal rim interferes with normal cooking and may damage the oven.

en-us_main.book.book Page 18 Wednesday, November 29, 2023 5:29 PM



- **Aluminum Foil**
  - Avoid large sheets of aluminum foil because they hinder cooking and may cause harmful arcing.
  - Use small pieces of foil to shield poultry legs and wings.
  - Keep ALL aluminum foil at least 1 inch from the side walls and door of the oven.
- **Wood**
  - Wood bowls and boards will dry out and may split or crack when you use them in the microwave oven.
  - Baskets react in the same way.
- **Tightly Covered Cookware**
  - Be sure to leave openings for steam to escape from covered containers.
  - Pierce plastic pouches of vegetables or other food items before cooking.
  - Tightly closed pouches could explode.
- **Brown Paper**
  - Avoid using brown paper bags.
  - They absorb too much heat and could burn.
- **Flawed or Chipped Cookware**
  - Any container that is cracked, flawed, or chipped may break in the oven.
- **Metal Twist Ties**
  - Remove metal twist ties from plastic or paper bags.
  - They become hot and could cause a fire.

### Testing Cookware before Use

Most heat resistant and non-metallic cookware is safe for use in your oven. However, some cookware may contain materials that are not suitable for microwave use. Follow the steps below to find out if cookware can be used in the microwave.

**1** Place the container in question and a glass measuring cup filled with water next to each other inside the oven.

**2** Heat the container and glass measuring cup for 1 minute at HIGH power.

- If the water heats up but the container remains cool to the touch, the container is microwave-safe.
- If the temperature of the water does not change but the container becomes warm, it is not safe for use in the microwave oven.

**⚠ CAUTION**

- Some items with high lead or iron content are not suitable for microwave cooking.
- Cookware should be checked to ensure that it is suitable for use in the microwave.
- Always be careful when taking cookware out of the oven. Some dishes absorb heat from the cooked food and may be hot.

## Cooking Guide

### Cooking Tips

Carefully monitor the food in the microwave oven while it is cooking. Directions given in recipes to elevate, stir, etc., are the minimum steps recommended. If food is overcooked (dry), undercooked, or unevenly cooked, make adjustments before or during cooking to correct the problem.

- **Overcooked or Dry Food**
  - **Sprinkling**: Sprinkle low-moisture foods such as roasts and vegetables with water before cooking, or cover them to retain moisture.
  - **Density**: Light, porous food such as cakes and breads cook more quickly than heavy, dense foods such as roasts and casseroles.
  - **Shielding**: Cover the corners of square dishes with small strips of aluminum foil to prevent overcooking. Don’t use too much foil, and secure the foil to the dish. Foil can cause arcing if it gets too close to the oven walls during cooking.
  - **Bones and Fat**: Bones conduct heat, and fat cooks more quickly than meat. Take care with bony or fatty cuts of meat.
- **Undercooked Food**
  - **Covering**: Cover food with a microwave-safe lid, parchment paper (not waxed paper), or plastic wrap to trap heat and steam and cook food more quickly.
  - **Standing Time**: Let food stand for several minutes after being removed from the oven to allow it to finish cooking and help flavors blend and develop.
  - **Quantity**: The more food you place in the oven, the longer the required cooking time.

en-us_main.book.book Page 19 Wednesday, November 29, 2023 5:29 PM





- **Temperature**: Ice-cold ingredients take much longer to cook than room temperature ingredients.

- **Unevenly Cooked Food**
  - **Stirring**: Stir food from the outside toward the center during cooking, as food at the outside of the dish heats more quickly.
  - **Arranging**: Turn food over several times during cooking. The upper portion of thick foods cooks more quickly than the lower portion.
  - **Shaping**: Place the thickest portions of foods like meat, poultry or fish toward the outside of the cookware to help them cook more evenly. If possible, shape foods into thin rounds or rings.
- **Foods with Skin, Shell or Membrane**
  - **Skin or Membrane**: Pierce the outsides of foods like potatoes, sausages, or egg whites or yolks before cooking.
  - **Shell**: Pierce or remove the shells from eggs, clams, oysters, or other shelled foods before cooking.
- **Defrosting Tips**
  - Remove fish, shellfish, meat, and poultry from its original wrapping paper or plastic package. Otherwise, the wrap close to the foods will hold steam and heat, which can cause the outer surface of the foods to be cooked.
  - Remove any metal twist ties.
  - Always slit or pierce plastic pouches or packaging.
  - Open containers such as cartons before they are placed in the oven.
  - If food is foil wrapped, remove the foil and place the food in a suitable container.
  - The length of defrosting time varies depending on the shape of the food and on how solidly the food is frozen.
  - As food begins to defrost, separate the food into pieces so that they can defrost more easily.
  - Turn over food during defrosting or standing time. Separate into pieces and remove food as required.
  - Let food stand after defrosting. Food should still be somewhat icy in the center when removed from the oven.
  - When using Defrost, the weight to be entered is the net weight in pounds and tenths of pounds (the weight of the food minus the container).
  - Slit the skins of frozen foods such as sausage.
  - Bend plastic pouches of food to ensure even defrosting.
  - Place food in a shallow container or in a microwave roasting dish to catch the drippings.
  - Always underestimate defrosting time. Food should still be somewhat icy in the center when removed from the oven. If defrosted food is still frozen solid in the center, return it to the microwave oven for more defrosting.
  - Depending on the shape of the food, some areas may defrost more quickly than others.
  - The shape of the package affects how quickly food will defrost. Shallow packages will defrost more quickly than a deep block.
  - For best results, shape ground meat into the form of a doughnut before freezing. When defrosting, scrape off thawed meat when the beep sounds and continue defrosting.
  - Use small pieces of aluminum foil to shield parts of food such as chicken wings, leg tips, fish tails, or areas that start to get warm. Make sure the foil does not touch the sides, top, or bottom of the oven. The foil can damage the oven lining.

## Precautions

**⚠ WARNING**

- Do not use your microwave oven to cook eggs in the shell. Pressure can build up inside the shell, causing it to burst.
- Never operate the oven when it is empty. Food or water should always be in the oven during operation to absorb the microwave energy.

- To program the oven, press the center of each button firmly. When a button is pressed correctly, a beep sounds and the oven is activated. Do not press several buttons at once.
- Do not strike the control panel with silverware, utensils, etc. It may be damaged or broken.
- Always be careful when taking cookware out of the oven. Some dishes absorb heat from the cooked food and may be hot. See the Cookware Guide section for more information.
- To avoid breakage, allow cookware to cool before rinsing or submerging in water. Always allow the turntable to cool before removing it from the oven.
- Do not use the oven to dry newspapers or clothes. They may catch fire.

en-us_main.book.book Page 20 Wednesday, November 29, 2023 5:29 PM



- Use thermometers that have been approved for microwave oven cooking.
- The turntable must always be in place when you operate the oven.

en-us_main.book.book Page 21 Wednesday, November 29, 2023 5:29 PM





# SMART FUNCTIONS

## LG ThinQ Application

This feature is only available on models with Wi-Fi.

The **LG ThinQ** application allows you to communicate with the appliance using a smartphone.

### LG ThinQ Application Features

- **Settings**
  - Allows you to set various options on the oven and in the application.
- **Smart Diagnosis**™
  - This function provides useful information for diagnosing and solving issues with the appliance based on the pattern of use.
- **Monitoring**
  - This function helps you check the current status, remaining time, cook settings and end time in one place.
- **Product Notifications**
  - Turn on the Push Alerts to receive appliance status notifications. The notifications are triggered even if the **LG ThinQ** application is not open.
- **Timer**
  - You can set the timer from the application.
- **Firmware Update**
  - Keep the appliance updated.

**NOTE**

- If you change your wireless router, Internet service provider, or password, delete the connected appliance from the **LG ThinQ** application and connect it again.
- This information is current at the time of publication. The application is subject to change for product improvement purposes without notice to users.

### Installing LG ThinQ Application and Connecting an LG Appliance

#### Models with QR Code

Scan the QR code attached to the product using the camera or a QR code reader application on your smartphone.

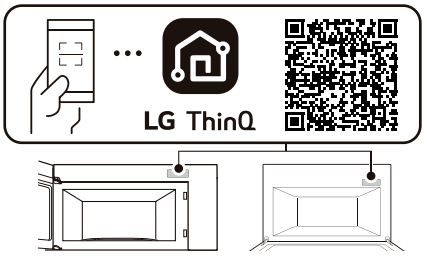


#### Models without QR Code

1. Search for and install the **LG ThinQ** application from the Google Play Store or Apple App Store on a smartphone.
2. Run the **LG ThinQ** application and sign in with your existing account or create an LG account to sign in.
3. Touch the add (+) button on the **LG ThinQ** application to connect your LG appliance. Follow the instructions in the application to complete the process.

**NOTE**

- To verify the Wi-Fi connection, check that the ᯤ icon on the control panel is lit.
- The appliance supports 2.4 GHz Wi-Fi networks only. To check your network frequency, contact your Internet service provider or refer to your wireless router manual.
- **LG ThinQ** is not responsible for any network connection problems or any faults, malfunctions, or errors caused by network connection.
- The surrounding wireless environment can make the wireless network service run slowly.
- If the distance between the appliance and the wireless router is too far, the signal becomes weak. It may take a long time to connect or fail to install the application.

en-us_main.book.book Page 22 Wednesday, November 29, 2023 5:29 PM



**NOTE**

- If the appliance is having trouble connecting to the Wi-Fi network, it may be too far from the router. Purchase a Wi-Fi repeater (range extender) to improve the Wi-Fi signal strength.
- The network connection may not work properly depending on the Internet service provider.
- The Wi-Fi may not connect or the connection may be interrupted because of the home network environment.
- If the appliance cannot be connected due to problems with the wireless signal transmission, unplug the appliance and wait about a minute before trying again.
- If the firewall on your wireless router is enabled, disable the firewall or add an exception to it.
- The wireless network name (SSID) should be a combination of English letters and numbers. (Do not use special characters.)
- Smartphone user interface (UI) may vary depending on the mobile operating system (OS) and the manufacturer.
- If the security protocol of the router is set to **WEP**, network setup may fail. Change the security protocol (**WPA2** is recommended), and connect the product again.

## Radio Equipment Specifications

| Type | Frequency Range | Output Power |
|---|---|---|
| Wi-Fi | 2412 MHz - 2462 MHz | < 30 dBm |
| Bluetooth | 2402 MHz - 2480 MHz | |

## Industry Canada Statement

This device contains licence-exempt transmitter(s)/ receiver(s) that comply with Innovation, Science and Economic Development Canada's licence-exempt RSS(s). Operation is subject to the following two conditions:

(1) This device may not cause interference.

(2) This device must accept any interference, including interference that may cause undesired operation of the device.

### IC Radiation Exposure Statement

This equipment complies with IC radiation exposure limits set forth for an uncontrolled environment.

This equipment should be installed and operated with a minimum distance of 20 cm (7.8 inches) between the antenna and your body.

**NOTE**

- THE MANUFACTURER IS NOT RESPONSIBLE FOR ANY RADIO OR TV INTERFERENCE CAUSED BY UNAUTHORIZED MODIFICATIONS TO THIS EQUIPMENT. SUCH MODIFICATIONS COULD VOID THE USER'S AUTHORITY TO OPERATE THE EQUIPMENT.

## Open Source Software Notice Information

To obtain the source code that is contained in this product, under GPL, LGPL, MPL, and other open source licenses that have the obligation to disclose source code, and to access all referred license terms, copyright notices and other relevant documents, please visit https://opensource.lge.com.

LG Electronics will also provide open source code to you on CD-ROM for a charge covering the cost of performing such distribution (such as the cost of media, shipping, and handling) upon email request to opensource@lge.com.

This offer is valid to anyone in receipt of this information for a period of three years after our last shipment of this product.

# Smart Diagnosis™ Feature

This feature is only available on models with the or logo.

Use this feature to help you diagnose and solve problems with your appliance.

**NOTE**

- For reasons not attributable to LGE's negligence, the service may not operate due to external factors such as, but not limited to, Wi-Fi unavailability, Wi-Fi disconnection, local app store policy, or app unavailability.
- The feature may be subject to change without prior notice and may have a different form depending on where you are located.

en-us_main.book.book Page 23 Wednesday, November 29, 2023 5:29 PM





## Using LG ThinQ to Diagnose Issues

If you experience a problem with your Wi-Fi equipped appliance, it can transmit troubleshooting data to a smartphone using the **LG ThinQ** application.

- Launch the **LG ThinQ** application and select the **Smart Diagnosis** feature in the menu. Follow the instructions provided in the **LG ThinQ** application.

## Using Audible Diagnosis to Diagnose Issues

Follow the instructions below to use the audible diagnosis method.

- Launch the **LG ThinQ** application and select the **Smart Diagnosis** feature in the menu. Follow the instructions for audible diagnosis provided in the **LG ThinQ** application.

**1** Press the **START/Enter** button for three seconds.

- If the display has been locked, you must deactivate the lock and then reactivate it.

**2** Hold the mouthpiece of your phone in front of the **Smart Diagnosis** logo located on the control panel.

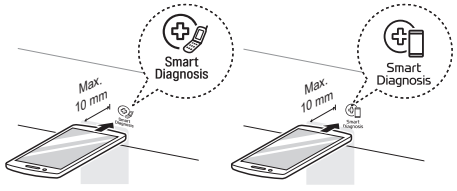


**3** Keep the phone in place until the tone transmission has finished. The display will count down the time. Once the countdown is over and the tones have stopped, the diagnosis will be displayed in the application.

**NOTE**

- For best results, do not move the phone while the tones are being transmitted.

en-us_main.book.book Page 24 Wednesday, November 29, 2023 5:29 PM



# MAINTENANCE

## Cleaning

### Cleaning the Interior

1 Use a damp cloth to clean the surfaces of the door and wipe out crumbs between the door and the frame.

2 Remove greasy spatters with a soapy cloth and then rinse and dry.

- Wipe spatters immediately with a wet paper towel, especially after cooking chicken or bacon.
- If steam accumulates inside or outside of the oven door, wipe the panels with a soft cloth.
- For stubborn soil, boil a cup of water in the oven for 2 to 3 minutes. Steam will soften the soil. To get rid of odors inside the oven, boil a cup of water with some lemon juice or vinegar in it.
- If some induction cleaners containing abrasives are used, the appearance of the product may be damaged.

### Cleaning the Exterior

1 Clean the outside of the oven with soap and water.

2 Rinse with clean water and dry with a soft cloth or paper towel.

- To prevent damage to the internal working parts of the oven, do not allow water to seep into the ventilation openings.
- The door and door seals should be kept clean. Use warm, soapy water to clean. Rinse off soap residue and dry thoroughly.
- Frequently wipe metal parts with a damp cloth.

### Cleaning the Control Panel

1 Open the door to prevent the oven from accidentally starting.

2 Wipe with a damp cloth followed immediately by a dry cloth.

3 Press **STOP/Clear** after cleaning.

### Cleaning the Accessories

Wash the glass tray and rotating ring in mild, sudsy water. For heavily soiled areas, use a mild cleanser and scouring sponge. Dry completely before use.

- The glass tray and rotating ring are dishwasher safe.

**NOTE**

- Abrasive cleansers, steel wool pads, gritty wash cloths, some paper towels, and other abrasive surfaces can damage the control panel and the interior and exterior oven surfaces.

### Cleaning the Grease Filters

Filters should be cleaned at least once a month or more often if needed.

1 To remove, push the finger groove back side and pull it downward.

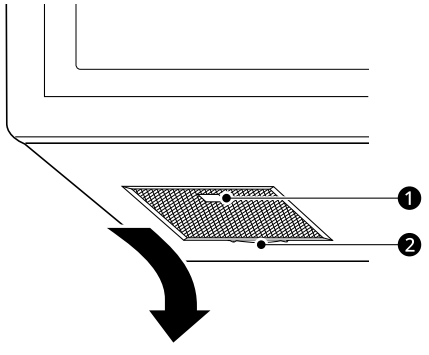


❶ Finger Groove

❷ Filter's Knob

2 Soak grease filters in hot water and a mild detergent.

en-us_main.book.book Page 25 Wednesday, November 29, 2023 5:29 PM





**3** Rinse well and shake to dry.

- Do not use ammonia or place in a dishwasher. The grease filter will be damaged.

**4** To reinstall, insert the filter's knob to the hole, then push the filter back and push it upward.

**NOTE**

- Do not operate the hood without the filters in place.

# Replacing Parts

## Replacing the Charcoal Filter

If your oven is vented inside, the charcoal filter should be replaced every 6 to 12 months, and more often if necessary. The charcoal filter cannot be cleaned. To order a new charcoal filter, contact an LG Customer Information Center or visit the lg.com website.

**1** Place your finger on the Finger Groove, push back, and pull down to remove the grease filter.

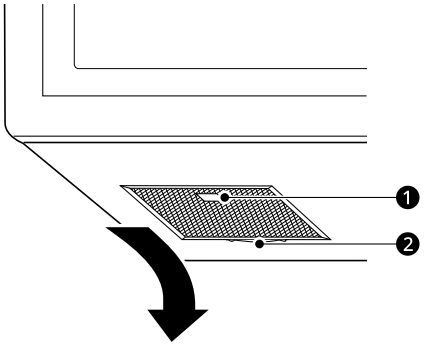


❶ Finger Groove

❷ Filter's Knob

**2** Remove the old charcoal filter.

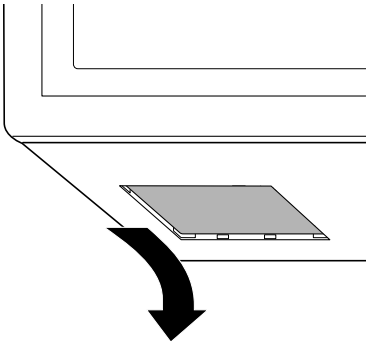

**3** Slide a new charcoal filter into place.

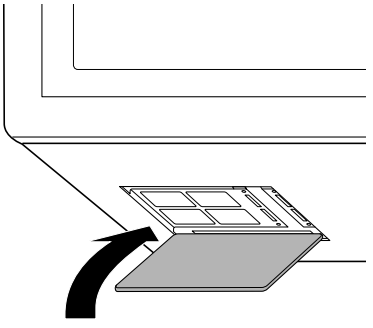

**4** Place your finger on the Finger Groove, push it back, and push it up to install the grease filter.

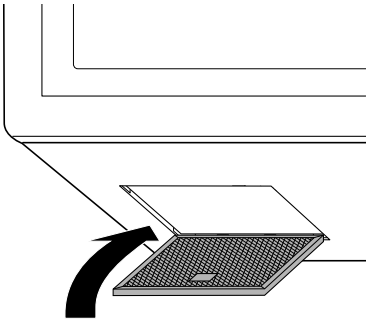

en-us_main.book.book Page 26 Wednesday, November 29, 2023 5:29 PM



# TROUBLESHOOTING

## FAQs

### Frequently Asked Questions

**Q: Will the oven be damaged if it operates while empty?**

A: Yes. Never operate the oven while it is empty or without the glass tray.

**Q: Does microwave energy pass through the viewing screen in the door?**

A: No. The metal screen bounces the energy back to the oven cavity. The holes (or ports) allow only light to pass through. They do not let microwave energy pass through.

**Q: Why do I see a light reflection around the outer case?**

A: This light is from the oven light which is located between the oven cavity and the outer wall of the oven.

**Q: What are the various sounds I hear when the oven is operating?**

A: The clicking sound is caused by a mechanical switch turning the microwave oven's magnetron ON and OFF.
The heavy hum and clunk is from the change in power the magnetron draws as it is turned ON and OFF by a mechanical switch. The change in blower speed is from the change in line voltage caused by the magnetron being turned ON and OFF.

**Q: Can my oven be damaged if food is cooked for too long?**

A: Like any other cooking appliance, it is possible to overcook food to the point that the food creates smoke and even possibly fire, and damages the inside of the oven. It is always best to be near the oven while you are cooking.

**Q: Why is a standing time recommended after microwave cooking time is over?**

A: Standing time allows foods to continue cooking evenly for a few minutes after the actual microwave oven cooking cycle. The amount of standing time depends upon the density of the foods.

**Q: Why is additional time required for cooking food stored in the refrigerator?**

A: As in conventional cooking, the initial temperature of food affects total cooking time. You need more time to cook food taken out of a refrigerator than for food at room temperature.

**Q: Sometimes the door of my oven appears wavy. Is this normal?**

A: This appearance is normal and does not affect the operation of your oven.

**Q: Why does the glass tray not move?**

A: The correct side of the tray should be facing up and the tray should sit firmly on the center hub. The support is not operating correctly. Reinstall the glass tray and restart the oven. Cooking without the glass tray can give you poor results. On some models, the turntable may be turned off. See Setting the Turntable in the Operation section.

**Q: Why does the dish become hot when I microwave food in it? I thought that this should not happen.**

A: As the food becomes hot it will conduct the heat to the dish. Use hot pads to remove food after cooking.

**Q: What does standing time mean?**

en-us_main.book.book Page 27 Wednesday, November 29, 2023 5:29 PM





A: Standing time means that food should be taken out of the oven and covered for additional time after cooking. This process allows the cooking to finish, saves energy, and frees the oven for other purposes.

**Q: Can I pop popcorn in my oven? How do I get the best results?**

A: Yes. Pop packaged microwave popcorn following manufacturer’s guidelines or use the preprogrammed Popcorn button.
Do not use regular paper bags. Use the listening test by stopping the oven as soon as the popping slows to a pop every one or two seconds. Do not try to repop unpopped kernels. You can also use special microwave poppers. When using a popper, be sure to follow manufacturer’s directions. Do not pop popcorn in glass utensils.

**Q: Why does steam come out of the air exhaust vent?**

A: Steam is normally produced during cooking. The oven has been designed to vent steam out of the vent.

**Q: Why aren't the function buttons working?**

A: Make sure that the oven is not in Control Lock mode. "LOCKED" will show in the display if Control Lock is activated. To deactivate Control Lock, press and hold **STOP/Clear** for three seconds.

en-us_main.book.book Page 28 Wednesday, November 29, 2023 5:29 PM



# Before Calling for Service

## Operation

| Problem | Possible Cause & Solution |
|---|---|
| **Microwave oven does not start** | **Power cord is unplugged, door is open, or cooking time has not been set.**<br>• Plug in power cord or check for a blown circuit fuse or a tripped main circuit breaker.<br>• Close oven door.<br>• Set cooking time. |
| | **Timer function started.**<br>• If the display shows a time counting down but the oven is not cooking, check to see if a **Timer** function has been started instead of a cooking function. |
| **Oven light does not work** | **Power cord is unplugged.**<br>• Plug in power cord. |
| **Arcing or Sparking** | **Cookware is not microwave safe, or the oven is being operated while it is empty.**<br>• Use microwave-safe cookware. When in doubt, test cookware before use.<br>• Do not operate oven while it is empty. |
| | **Wire twist-ties have not been removed from paper or plastic bags, or the metal rack was installed improperly.**<br>• Remove wire twist-ties from paper or plastic bags.<br>• Place the rack securely in the four plastic supports. |
| **Incorrect Time of Day** | **Power interruption.**<br>• Reset the time. See Setting the Clock section to reset time of day. |
| **Unevenly Cooked Foods** | **Cookware is not microwave safe, or cook settings were wrong.**<br>• Test cookware to make sure it is microwave safe.<br>• Do not cook without the glass tray.<br>• Turn or stir food while cooking.<br>• Defrost food completely before cooking.<br>• Use correct cook time and power level.<br>• Check position of aluminum strips used to prevent overcooking. |
| **Overcooked Foods** | **Cooking settings and methods are wrong.**<br>• Change cook time or power level. |
| **Undercooked Foods** | **Cookware is not microwave safe, or cook settings were wrong.**<br>• Test that cookware is microwave safe.<br>• Defrost food completely before cooking.<br>• Change cook time or power level.<br>• Make sure that ventilation ports are not blocked. |
| **Improper Defrosting** | **Cookware is not microwave safe, or cook settings were wrong.**<br>• Test that cookware is microwave safe.<br>• Change defrost time or weight.<br>• Turn or stir food during defrost cycle. |
| **Moisture collects on oven window or steam comes from oven vent** | **This happens when cooking foods high in moisture.**<br>• This is normal. |

en-us_main.book.book Page 29 Wednesday, November 29, 2023 5:29 PM





## Wi-Fi

| Problem | Possible Cause & Solution |
|---|---|
| **Trouble connecting appliance and smartphone to Wi-Fi network** | **The password for the Wi-Fi network was entered incorrectly.**<br>• Delete your home Wi-Fi network and begin the connection process again. |
| | **Mobile data for your smartphone is turned on.**<br>• Turn off the **Mobile data** on your smartphone before connecting the appliance. |
| | **The wireless network name (SSID) is set incorrectly.**<br>• The wireless network name (SSID) should be a combination of English letters and numbers. (Do not use special characters.) |
| | **The router frequency is not 2.4 GHz.**<br>• Only a 2.4 GHz router frequency is supported. Set the wireless router to 2.4 GHz and connect the appliance to the wireless router. To check the router frequency, check with your Internet service provider or the router manufacturer. |
| | **The appliance and the router are too far apart.**<br>• If the appliance is too far from the router, the signal may be weak and the connection may not be configured correctly. Move the router closer to the appliance or purchase and install a Wi-Fi repeater. |
| | **During Wi-Fi setup, the app is requesting a password to connect to the product (on certain phones).**<br>• Locate the network name which starts with "LG" under Settings > Networks. Note the last part of the network name.<br>- If the network name looks like LGE_Appliance_XX-XX-XX, enter lge12345.<br>- If the network name looks like LGE_Appliance_XXXX, enter XXXX twice as your password. For example, if the network name appears as LGE_Appliance_8b92, then you would enter 8b928b92 as your password. In this instance, the password is case sensitive and the last 4 characters are unique to your appliance. |

en-us_main.book.book Page 30 Wednesday, November 29, 2023 5:29 PM



# LIMITED WARRANTY

## USA

### TERMS AND CONDITIONS

**ARBITRATION NOTICE: THIS LIMITED WARRANTY CONTAINS AN ARBITRATION PROVISION THAT REQUIRES YOU AND LG ELECTRONICS ("LG") TO RESOLVE DISPUTES BY BINDING ARBITRATION INSTEAD OF IN COURT, UNLESS YOU CHOOSE TO OPT OUT. IN ARBITRATION, CLASS ACTIONS AND JURY TRIALS ARE NOT PERMITTED. PLEASE SEE THE SECTION TITLED "PROCEDURE FOR RESOLVING DISPUTES" BELOW.**

**Should your LG Microwave Oven ("Product") fail due to a defect in materials or workmanship under normal and proper use, during the warranty period set forth below, LG will, at its option, repair or replace the Product. This limited warranty is valid only to the original retail purchaser of the Product ("You") and applies only when purchased lawfully and used within the United States including U.S. Territories.**

| WARRANTY PERIOD | |
|---|---|
| **Microwave Oven** | **Magnetron** |
| One (1) year from the date of original retail purchase | Ten (10) years from the date of original retail purchase |
| Parts and Labor (internal/functional parts only excluding magnetron) | Parts only (You are responsible for any applicable labor cost) |

- Replacement Products and parts are warranted for the remaining portion of the original warranty period or ninety (90) days, whichever is greater.
- Replacement Products and parts may be new, reconditioned, refurbished, or otherwise factory remanufactured.
- Replaced Product or part(s) will be the property of LG.
- Proof of original retail purchase specifying the Product model and date of purchase is required to obtain warranty service under this limited warranty.

EXCEPT TO THE EXTENT PROHIBITED BY APPLICABLE LAW, ANY IMPLIED WARRANTY OF MERCHANTABILITY OR FITNESS FOR A PARTICULAR PURPOSE ON THE PRODUCT IS LIMITED IN DURATION TO THE DURATION OF THE ABOVE LIMITED WARRANTY. UNDER NO CIRCUMSTANCES SHALL LG OR ITS U.S. DISTRIBUTORS/DEALERS BE LIABLE FOR ANY INDIRECT, INCIDENTAL, CONSEQUENTIAL, SPECIAL, OR PUNITIVE DAMAGES, INCLUDING, WITHOUT LIMITATION, LOST GOODWILL, LOST REVENUES OR PROFITS, WORK STOPPAGE, IMPAIRMENT OF OTHER GOODS, COST OF REMOVAL AND REINSTALLATION OF THE PRODUCT, LOSS OF USE, OR ANY OTHER DAMAGES WHETHER BASED IN CONTRACT, TORT, OR OTHERWISE. LG'S TOTAL LIABILITY, IF ANY, SHALL NOT EXCEED THE PURCHASE PRICE PAID BY YOU FOR THE PRODUCT.

**SOME STATES DO NOT ALLOW THE EXCLUSION OR LIMITATION OF INCIDENTAL OR CONSEQUENTIAL DAMAGES OR LIMITATIONS ON HOW LONG AN IMPLIED WARRANTY LASTS, SO THE ABOVE EXCLUSIONS OR LIMITATIONS MAY NOT APPLY TO YOU. THIS LIMITED WARRANTY GIVES YOU SPECIFIC LEGAL RIGHTS AND YOU MAY ALSO HAVE OTHER RIGHTS THAT VARY FROM STATE TO STATE.**

### THIS LIMITED WARRANTY DOES NOT COVER:

- Service trips to deliver, pick up, or install, educate how to operate, correct wiring, or correct unauthorized repairs.
- Damage or failure of the Product to perform during power failures and interrupted or inadequate electrical service.

en-us_main.book.book Page 31 Wednesday, November 29, 2023 5:29 PM





- Damage or failure of the Product caused by leaky or broken water pipes, frozen water pipes, restricted drain lines, inadequate or interrupted water supply or inadequate supply of air.
- Damage or failure of the Product resulting from operating the Product in a corrosive atmosphere or contrary to the Product owner's manual.
- Damage or failure of the Product caused by accidents, pests and vermin, lightning, wind, fire, floods, acts of nature, or any other causes beyond the control of LG.
- Damage or failure of the Product caused by unauthorized modification or alteration, or if the Product is used for other than the intended purpose, or any water leakage where the Product was not properly installed.
- Damage or failure of the Product caused by incorrect electrical current, voltage, or plumbing codes.
- Damage or failure of the Product caused by transportation, storage, and/or handling, including scratches, dents, chips, and/or other damage to the finish of the Product, unless such damage is reported within one (1) week of delivery.
- Damage or failure of the Product resulting from misuse, abuse, improper installation, repair, or maintenance. Improper repair includes the use of parts not authorized by LG. Improper installation or maintenance includes installation or maintenance contrary to the Product owner's manual.
- Damage or failure of the Product caused by the use of parts, components, accessories, consumable cleaning products, or any other products or services that were not authorized by LG.
- Damage or missing items to any display or open box Product.
- Refurbished Product or any Product sold "As Is", "Where Is", "With all Faults", or similar disclaimer.
- Products with original serial numbers that have been removed, altered, or cannot be readily determined.
- Increases in utility costs and additional utility expenses.
- Any noises associated with normal operation.
- Products used for other than normal and proper household use (e.g., commercial or industrial use) or contrary to the Product owner's manual.
- Costs associated with removal and reinstallation of the Product for repairs, or the removal and reinstallation of the Product if it is installed in an inaccessible location or not installed in accordance with the Product Owner's manual.
- Accessories, removable components, or consumable parts (e.g. Shelves, door bins, drawers, water/air filters, racks, light bulbs, batteries, etc., as applicable), except for internal/functional parts covered under this limited warranty.

**The cost of repair or replacement under these excluded circumstances shall be borne by You.**

TO OBTAIN WARRANTY SERVICE AND ADDITIONAL INFORMATION

Call 1-800-243-0000 and select the appropriate option from the menu.

Or visit our website at http://www.lg.com

Or by mail: LG Electronics Customer Service P.O. Box 240007 Huntsville, AL 35813 ATTN: CIC

## NOT COVERED BY WARRANTY

| Problem | Cause | Solution |
|---|---|---|
| Unit has no power | • House power turned off (power supply)<br>• Tripped breaker.<br>• The power cord is not installed properly. | • Check house power supply.<br>• Check proper power cord connection.<br>• Check extension cord. |

en-us_main.book.book Page 32 Wednesday, November 29, 2023 5:29 PM



| Problem | Cause | Solution |
|---|---|---|
| Spark / Arcing | Aluminum foil or metal utensil used in microwave mode. | • Check user instructions.<br>• DO NOT use aluminum foil or metal utensils in microwave mode. |
| Microwave oven installation issue.<br>• Vibration noise<br>• Unit is not level<br>• Installation damage | • Mounting bracket screw not fixed completely.<br>• Mounting plate not aligned.<br>- 3/16" Hole on Studs, 5/8" Hole on Drywall Only<br> 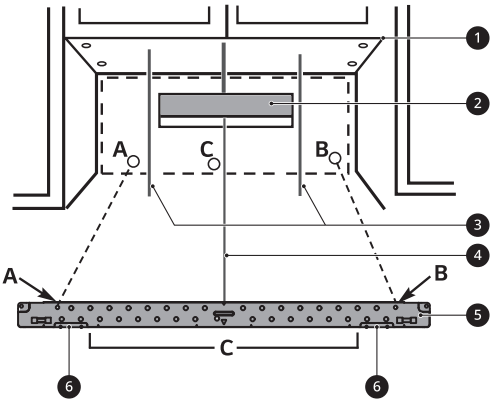 <br><br>❶ Minimum 61.7" from the floor<br>❷ For Wall Venting Only<br>❸ Draw Lines on Studs<br>❹ Draw Center Line<br>❺ Mounting Plate<br>❻ Support Tab<br> 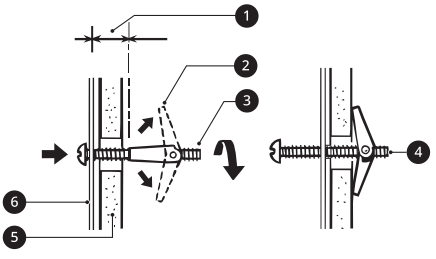 <br><br>❶ Space More Than Wall Thickness<br>❷ Toggle Wings<br>❸ Toggle Bolt<br>❹ Bolt End<br>❺ Wall<br>❻ Mounting Plate<br>• Product carried/installed improperly. | Check with installer first. |

en-us_main.book.book Page 33 Wednesday, November 29, 2023 5:29 PM





| Problem | Cause | Solution |
|---|---|---|
| Vent is not working.<br>• Weak or no ventilation.<br>• Abnormal noise during operation.<br>• Product overheating. | • Improper blower unit direction or installation.<br>• Improper ductwork or damper connection.<br> 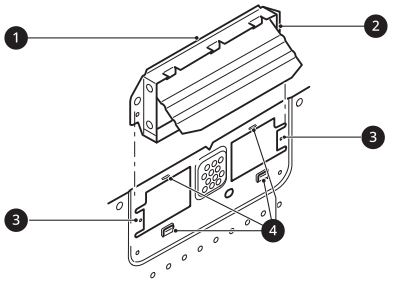 <br> 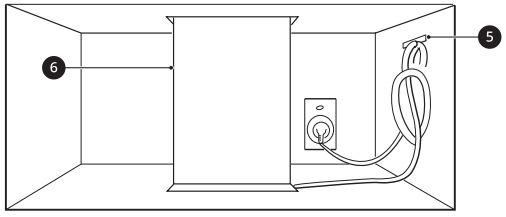 <br>❶ Exhaust Adapter<br>❷ Damper (hinge side up)<br>❸ Guides<br>❹ Locking Tabs<br>❺ Cable Clamping for Power Cord<br>❻ Duct | • Check blower unit direction and reinstall if necessary.<br>• Properly align the exhaust operation ports and blower plate opening.<br>• Blower unit exhaust ports should be completely exposed to the outside.<br>• After installation, check the air ventilation path |

## PROCEDURE FOR RESOLVING DISPUTES:

**ALL DISPUTES BETWEEN YOU AND LG ARISING OUT OF OR RELATING IN ANY WAY TO THIS LIMITED WARRANTY OR THE PRODUCT SHALL BE RESOLVED EXCLUSIVELY THROUGH BINDING ARBITRATION, AND NOT IN A COURT OF GENERAL JURISDICTION. BINDING ARBITRATION MEANS THAT YOU AND LG ARE EACH WAIVING THE RIGHT TO A JURY TRIAL AND TO BRING OR PARTICIPATE IN A CLASS ACTION.**

**Definitions.** For the purposes of this section, references to "LG" mean LG Electronics U.S.A., Inc., its parents, subsidiaries and affiliates, and each of their officers, directors, employees, agents, beneficiaries, predecessors in interest, successors, assigns and suppliers; references to "dispute" or "claim" shall include any dispute, claim or controversy of any kind whatsoever (whether based in contract, tort, statute, regulation, ordinance, fraud, misrepresentation or any other legal or equitable theory) arising out of or relating in any way to the sale, condition or performance of the product or this Limited Warranty.

**Notice of Dispute.** In the event you intend to commence an arbitration proceeding, you must first notify LG in writing at least 30 days in advance of initiating the arbitration by sending a letter to LG at LG Electronics, USA, Inc. Attn: Legal Department- Arbitration 111 Sylvan Ave, Englewood Cliffs, NJ 07632. You and LG agree to engage in good faith discussions in an attempt to amicably resolve your claim. The notice must provide your name, address, and telephone number; identify the product that is the subject of the claim; and describe the nature of the claim and the relief being sought. If you and LG are unable to resolve the dispute within 30 days, either party may proceed to file a claim for arbitration.

**Agreement to Binding Arbitration and Class Action Waiver.** Upon failure to resolve the dispute during the 30 day period after sending written notice to LG, you and LG agree to resolve any claims between us only by binding arbitration on an individual basis, unless you opt out as provided below. Any dispute between you and LG shall not be combined or consolidated with a dispute involving any other person's or entity's product or claim. More specifically, without limitation of the foregoing, any dispute between you and LG shall not under any circumstances proceed as part of a class or representative action. Instead of

en-us_main.book.book Page 34 Wednesday, November 29, 2023 5:29 PM



arbitration, either party may bring an individual action in small claims court, but that small claims court action may not be brought on a class or representative basis.

**Arbitration Rules and Procedures.** To begin arbitration of a claim, either you or LG must make a written demand for arbitration. The arbitration will be administered by the American Arbitration Association ("AAA") and will be conducted before a single arbitrator under the AAA's Consumer Arbitration Rules that are in effect at the time the arbitration is initiated (referred to as the "AAA Rules") and under the procedures set forth in this section. The AAA Rules are available online at www.adr.org/consumer. Send a copy of your written demand for arbitration, as well as a copy of this provision, to the AAA in the manner described in the AAA Rules. You must also send a copy of your written demand to LG at LG Electronics, USA, Inc. Attn: Legal Department- Arbitration 111 Sylvan Avenue, Englewood Cliffs, NJ 07632. If there is a conflict between the AAA Rules and the rules set forth in this section, the rules set forth in this section will govern. This arbitration provision is governed by the Federal Arbitration Act. Judgment may be entered on the arbitrator’s award in any court of competent jurisdiction. All issues are for the arbitrator to decide, except that issues relating to the scope and enforceability of the arbitration provision and to the arbitrability of the dispute are for the court to decide. The arbitrator is bound by the terms of this provision.

**Governing Law.** The law of the state of your residence shall govern this Limited Warranty and any disputes between us except to the extent that such law is preempted by or inconsistent with applicable federal law.

**Fees/Costs.** You do not need to pay any fee to begin an arbitration. Upon receipt of your written demand for arbitration, LG will promptly pay all arbitration filing fees to the AAA unless you seek more than $25,000 in damages, in which case the payment of these fees will be governed by the AAA Rules. Except as otherwise provided for herein, LG will pay all AAA filing, administration and arbitrator fees for any arbitration initiated in accordance with the AAA Rules and this arbitration provision. If you prevail in the arbitration, LG will pay your attorneys' fees and expenses as long as they are reasonable, by considering factors including, but not limited to, the purchase amount and claim amount. Notwithstanding the foregoing, if applicable law allows for an award of reasonable attorneys' fees and expenses, an arbitrator can award them to the same extent that a court would. If the arbitrator finds either the substance of your claim or the relief sought in the demand is frivolous or brought for an improper purpose (as measured by the standards set forth in Federal Rule of Civil Procedure 11(b)), then the payment of all arbitration fees will be governed by the AAA Rules. In such a situation, you agree to reimburse LG for all monies previously disbursed by it that are otherwise your obligation to pay under the AAA Rules. Except as otherwise provided for, LG waives any rights it may have to seek attorneys' fees and expenses from you if LG prevails in the arbitration.

**Hearings and Location.** If your claim is for $25,000 or less, you may choose to have the arbitration conducted solely on the basis of (1) documents submitted to the arbitrator, (2) through a telephonic hearing, or (3) by an in-person hearing as established by the AAA Rules. If your claim exceeds $25,000, the right to a hearing will be determined by the AAA Rules. Any in-person arbitration hearings will be held at a location within the federal judicial district in which you reside unless we both agree to another location or we agree to a telephonic arbitration.

**Opt Out.** You may opt out of this dispute resolution procedure. If you opt out, neither you nor LG can require the other to participate in an arbitration proceeding. To opt out, you must send notice to LG no later than 30 calendar days from the date of the first consumer purchaser's purchase of the product by either: (i) sending an e-mail to optout@lge.com, with the subject line: "Arbitration Opt Out" or (ii) calling 1-800-980-2973. You must include in the opt out e-mail or provide by telephone: (a) your name and address; (b) the date on which the product was purchased; (c) the product model name or model number; and (d) the serial number (the serial number can be found (i) on the product; or (ii) online by accessing https://www.lg.com/us/support/repair-service/schedule-repair continued and clicking on "Find My Model & Serial Number").

You may only opt out of the dispute resolution procedure in the manner described above (that is, by e-mail or telephone); no other form of notice will be effective to opt out of this dispute resolution procedure.

Opting out of this dispute resolution procedure will not affect the coverage of the Limited Warranty in any way, and you will continue to enjoy the full benefits of the Limited Warranty. If you keep this product and do not opt out, then you accept all terms and conditions of the arbitration provision described above.

LG
Life's Good

**LG Customer Information Center**

For inquiries or comments,
visit **www.lg.com** or call:

1-800-2 dummy U.S.A.
1-888-542-2623 CANADA

**Register your product Online!**

www.lg.com