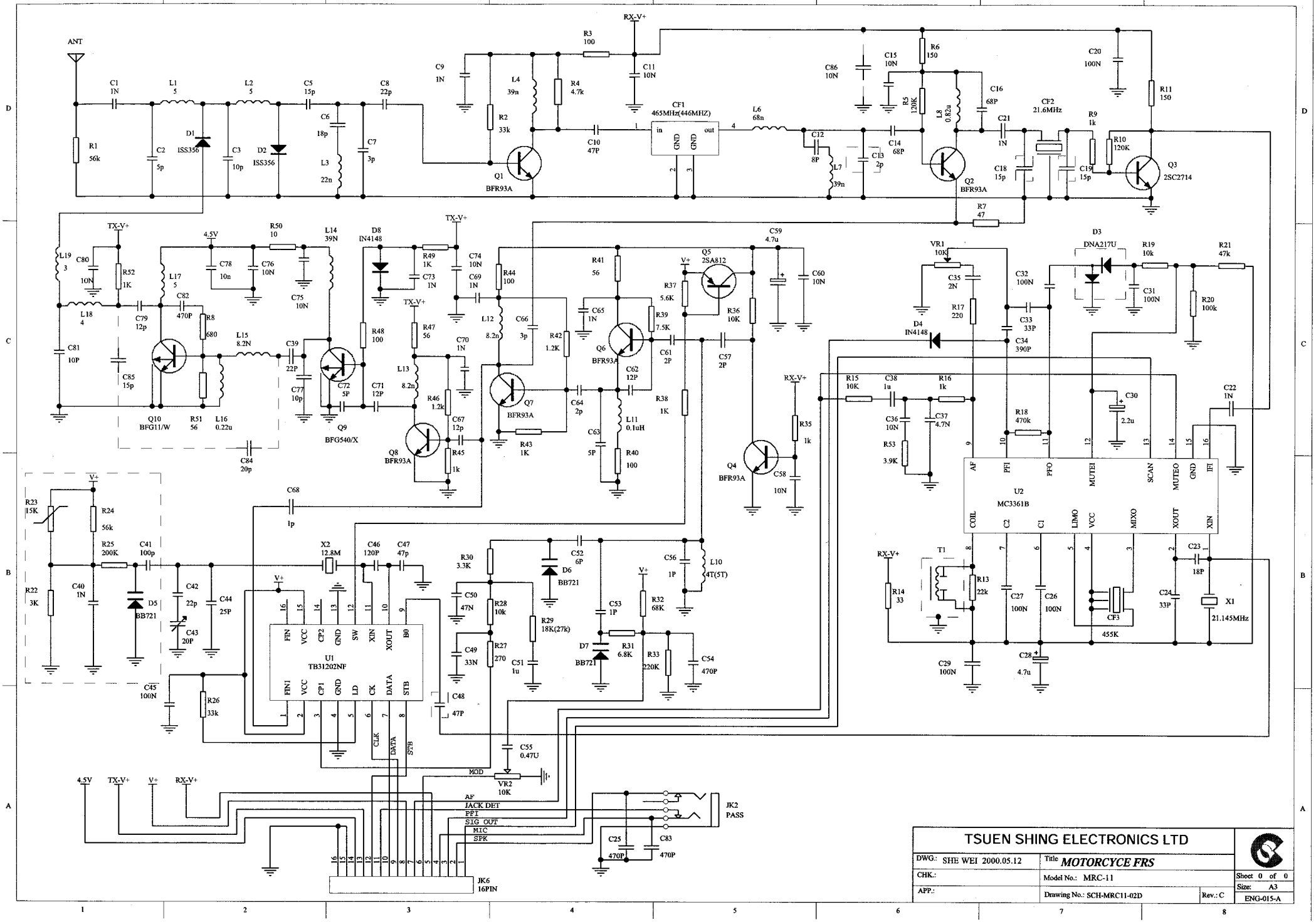

TSUEN SHING ELECTRONICS LTD		
DWG.: SHE WEI 2000.05.12	Title *MOTORCYCE FRS*	
CHK.:	Model No.: MRC-11	Sheet 0 of 0
APP.:	Drawing No.: SCH-MRC11-02D	Rev.: C
		Size: A3
		ENG-015-A

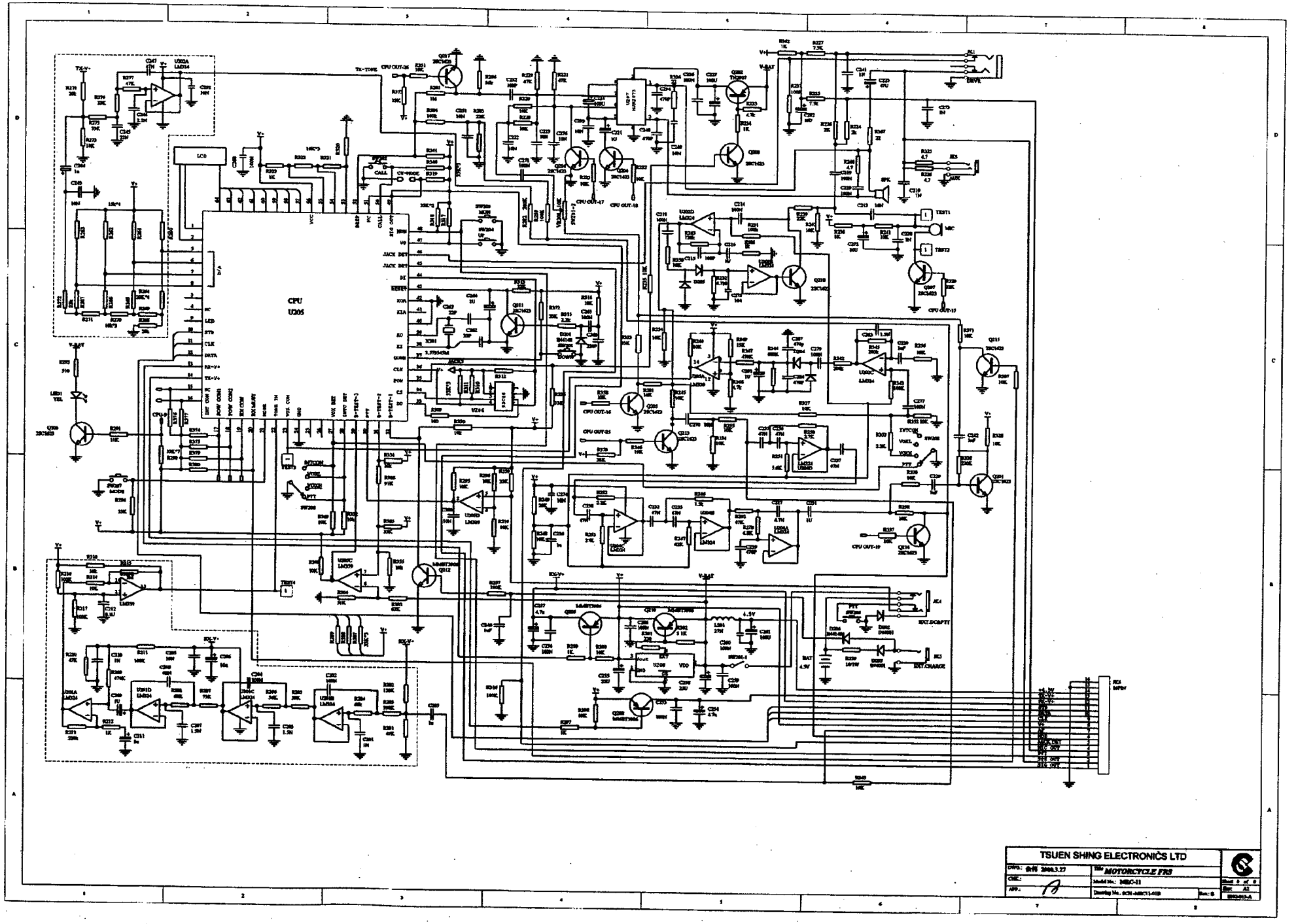
CPU
U205
LCD
TSUEN SHING ELECTRONICS LTD
MOTORCYCLE FRS