GL-T8100

System Manual

Premilinary

PN 9110.01196

Revision A

Specifications subject to change without notice

Copyright © 1998 Glenayre

All rights reserved. No part of this work may be reproduced or copied in any form or by any means -- graphic, electronic, or mechanical, including photocopying, recording, taping, or information-retrieval system -- without written permission of Glenayre.

Copyright © 1998 Glenayre

Document Change Record

Issue:	1, Revision A
Date:	08/04/98
Changes:	None, Original

Copyright © 1998 Glenayre

g1196s10.fm

10 GENERAL

Information expressed in this section is intended to keep the instruciton manual current with respect to recent product updates. The GL-T8100 is frequency-selectable by specifying the appropriate internal frequency-determining hardware and software. Refer to Table 10-2 for the correct part number.

10.1 Applicable Documents

This manual is incomplete without the document shown in *Table 10-1, Applicable Documents*.

Table 10-1 Applicable Documents

Document	Part number	Description
DSP Exciter user manual	9110.01021	This manual describes the features of the DSP exciter.
GL2728 Power Supply	9110.00622	This manual describes the features of the GL2728 power supply

10.2 Additional Specifications

Table 10-2, Part Numbers of VCO/RF Amplifier Boards, identifies transmitter model additions to the existing Table 3-1 in the DSP exciter user manual, 9110.01021.

Table 10-2 Part Numbers of VCO/RF Amplifier Boards

Transmitter model	VCO/RF amplifier board frequency band (MHz)	VCO board assembly part number
GL-T8100	924 - 936	263-0082-053

10.3 Additional Hardware

An external low-pass filter, *Figure 10-1, Low-Pass Filter*, is part of the GL-T8100 and is required to meet emission standards.

Copyright © 1998 Glenayre

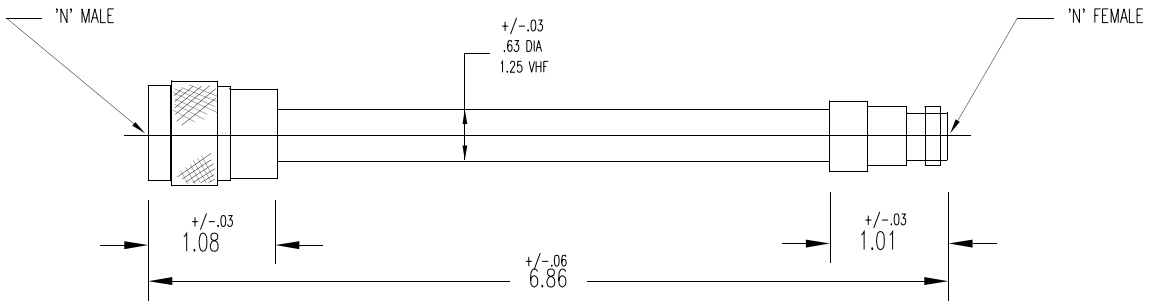

Pass Band	840-960 MHz
VSWR	1.25 max
Pass Band Insertion Loss	0.2 dB max
Stop Band	1,600-4,800 MHz
Stop Band Loss	55 dB min
Power Rating, Average	500 watts
Power Rating, Peak	3 kilowatts
Impedance	50 ohms
Intermodulation Distortion	130 dBc max
Temperature Range	°35 C to -75 C
Connectors	Type N, male & female
Finish, Connectors	silver plate per QQ-S365
Finish, Housing	iridite per MIL-C-5541

Figure 10-1 Low-Pass Filter

Copyright © 1998 Glenayre

g1196s10.fm

10.4 Simplified Block-Diagram Description

Refer to *Figure 10-2, Simplified Block Diagram*, in the following discussion. Inputs from the transmitter controller usually are one or two data bits, two channel-select bits, and keying input. Outputs to the controller are keying output indicator, various fault outputs, forward-power sample, and reflected-power sample.

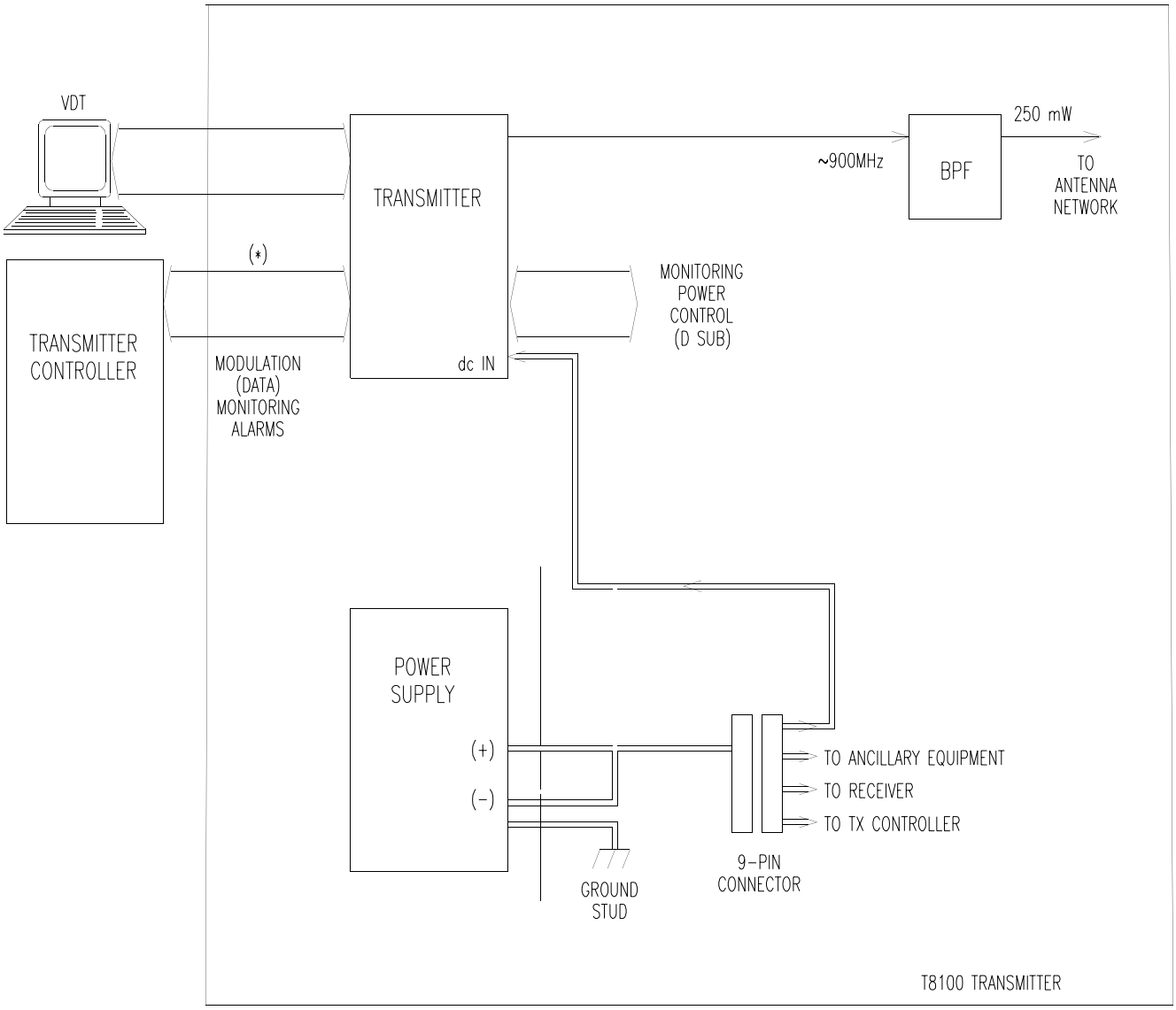

*REFER TO EXCITER MANUAL FOR A DISCUSSION OF INTERFACE TO TRANSMITTER CONTROLLER.

Figure 10-2 Simplified Block Diagram

Copyright © 1998 Glenayre

Copyright © 1998 Glenayre

DSP Exciter (EC)

User Manual

RELEASED

PN 9110.01021

Revision B

Specifications subject to change without notice

Copyright © 1998 Glenayre

All rights reserved. No part of this work may be reproduced or copied in any form or by any means -- graphic, electronic, or mechanical, including photocopying, recording, taping, or information-retrieval system -- without written permission of Glenayre.

Copyright © 1998 Glenayre

Document Change Record

Issue:	1, Revision A
Date:	11/24/97
Changes:	None, Original

Issue:	1, Revision B
Date:	06/11/98
Changes:	made 88-us changes to text and figures, created intdex

Copyright © 1998 Glenayre

d1021_ti.toc

Table of Contents

1 GENERAL 1-1

1.1 Manual Scope 1-1

1.2 Applicable Documents 1-1

1.3 Glenayre Locations 1-1

1.3.1 Product Warranty Information 1-2

1.3.2 Service Warranty Information 1-2

2 SPECIFICATIONS 2-1

3 DESCRIPTION 3-1

3.1 General 3-1

3.2 Physical Description 3-1

3.3 Simplified Block-Diagram Description 3-1

4 INSTALLATION AND SETUP 4-1

4.1 Precautions and Hazards 4-1

4.2 Test Equipment and Tools Required 4-1

4.3 Component and Adjustment Locations 4-1

4.4 Installation 4-1

4.4.1 Inspection 4-1

4.4.2 Power Requirement 4-1

4.4.3 Input/Output Connections 4-2

4.4.4 Signal Functions 4-2

4.4.5 Switches and Jumpers 4-3

4.5 Setup 4-4

4.6 Ultimate Disposition 4-4

4.7 Grounding 4-4

5 OPERATION 5-1

5.1 Front-Panel Controls and Indicators 5-1

5.2 Operating Instructions 5-1

6 THEORY OF OPERATION 6-1

6.1 Exciter/PA Control 6-1

6.1.1 Reference Source 6-1

6.1.2 Main Circuit Frequencies 6-1

6.1.3 Controller Interface Functions 6-1

Copyright © 1998 Glenayre

6.2 Interface to Controller 6-1
6.3 DSP Modulator 6-3
6.3.1 General 6-3
6.3.2 DSP Modulator Signal Flow 6-3
6.3.2.1 Digital Signal Modulator 6-3
6.3.2.2 Digital Quadrature Modulator 6-4
6.3.2.3 Digital-to-Analog Converter 6-4
6.3.2.4 Read-Only Memory 6-4
6.4 IF Stage 6-4
6.4.1 Filter-1 6-4
6.4.2 Mixer-1 6-6
6.4.3 Filter-2 6-6
6.4.4 VCO-1 6-6
6.4.5 Synthesizer-1 6-6
6.5 MCU 6-6
6.5.1 Microcontroller Unit (MCU) 6-7
6.5.2 Digital-to-Analog (D/A) Converter 6-7
6.5.3 8/16-Bit Converter 6-7
6.5.4 Read-Only Memory 6-8
6.5.5 VSWR-Fault Detector 6-8
6.5.6 Alarm Data-to-Logic Conversion 6-8
6.5.7 Alarm Data-to-Logic Conversion 6-8
6.6 RF Assemblies 6-14
6.6.1 RF Stage Location 6-14
6.6.2 RF Assemblies 6-14
6.6.2.1 RF Stage Description 6-14
6.6.2.2 RF Stage Bands 6-14
6.6.2.3 RF Stage Signal Flow 6-14
6.6.2.3.1 Mixer-2 6-14
6.6.2.3.2 Filter 6-15
6.6.2.3.3 Amplifier 6-15
6.6.2.3.4 VCO-2 6-15
6.6.2.3.5 Synthesizer-2 6-15
6.7 Voltage Regulator Circuit 6-15

Copyright © 1998 Glenayre

d1021_ti.toc

7 MAINTENANCE 7-1

7.1 Location of Maintenance Procedures 7-1

7.2 Test Equipment Required 7-1

7.3 VCO-2 Adjustment Procedure 7-1

7.3.1 VCO-2 Multichannel Adjustment Procedure 7-1

7.3.2 VCO-2 Single-Channel Adjustment Procedure 7-1

7.4 Over-The-Link Downloading 7-2

7.5 On-The-Fly Channel/Mode Changing 7-2

7.5.1 Programming Example 7-3

7.5.1.1 DSP Exciter (2.1) / GL-C2000 (2.3) 7-4

7.5.1.2 DSP Exciter (3.0) / GL-C2000 (3.0) / GL3000 (6.0) . 7-4

7.6 16-Channel Operation 7-4

7.7 On-The-Fly Interface 7-5

7.8 Checkout 7-6

7.9 Troubleshooting 7-6

8 REMOVAL AND REINSTALLATION 8-1

8.1 Exciter/PA Control Chassis 8-1

8.1.1 Removal Procedure 8-1

8.1.2 Reinstallation Procedure 8-1

8.2 Exciter Cover 8-2

8.2.1 Removal Procedure 8-2

8.2.2 Reinstallation Procedure 8-2

8.3 Exciter/Control Board 8-5

8.3.1 Removal Procedure 8-5

8.3.2 Reinstallation Procedure 8-5

8.4 Interface I/O Board 8-8

8.4.1 Removal Procedure 8-8

8.4.2 Reinstallation Procedure 8-8

8.5 VCO/RF Amplifier Board 8-9

8.5.1 Removal Procedure 8-9

8.5.2 Reinstallation Procedure 8-9

Copyright © 1998 Glenayre

9 OPTIONS 9-1

9.1 Exciter/PA Control w/ QT-1000 Interface 9-1

9.1.1 Reference Source 9-1

9.1.2 Controller Interface Connector Functions (QT-1000) 9-1

9.1.3 Interface Conversion Functions (QT-1000) 9-1

9.1.3.1 Analog-Mode A/D Conversion 9-1

9.1.3.2 FSK-Data-Bit Strapping 9-2

9.1.3.3 Channel-Select-Bit Strapping 9-2

9.1.3.4 Mode-Select-Bit Strapping 9-2

9.1.3.5 Power Sample D/A Conversion 9-2

9.2 Exciter/PA Control with Standard Interface 9-5

9.2.1 Reference Source 9-5

9.2.2 Controller Interface Connector Functions (Standard) 9-5

9.2.3 Interface Conversion Functions (Standard) 9-5

9.2.3.1 Analog-Mode A/D Conversion 9-5

9.2.3.2 FSK-Data-Bit Strapping 9-6

9.2.3.3 Channel-Select-Bit Strapping 9-6

9.2.3.4 Mode-Select-Bit Strapping 9-6

9.2.3.5 Power Sample D/A Conversion 9-6

9.3 Exciter/PA Control with I20 Interface 9-6

9.3.1 Reference Source 9-6

9.3.2 Controller Interface Connector Functions 9-7

9.3.3 I20 Interface Conversion Functions 9-8

9.3.3.1 FSK-Data-Bit Strapping 9-8

9.3.3.2 Channel-Select-Bit Strapping 9-8

9.3.3.3 Mode-Select-Bit Strapping 9-9

Copyright © 1998 Glenayre

d1021_ti.lof

List of Figures

Figure 3-1 DSP Exciter Rear View 3-4

Figure 3-2 DSP Exciter Top View with Internal Controls and Indicators 3-5

Figure 3-3 DSP Exciter Simplified Functional Diagram 3-6

Figure 4-1 DSP Exciter/PA Control Circuit Boards Interconnection Diagram 4-5

Figure 5-1 Front-Panel Controls and Indicators 5-2

Figure 6-1 DSP Exciter RF Stage Functional Diagram 6-2

Figure 6-2 DSP Exciter MCU Circuit Functional Diagram 6-5

Figure 6-3 DSP Exciter-to-Controller Functional Diagram 6-10

Figure 6-4 DSP Exciter Detailed Functional Diagram 6-12

Figure 6-5 DSP Exciter IF-Stage Detailed Functional Diagram 6-13

Figure 7-1 On-The-Fly GL-C2000 Control Lines to DSP Exciter 7-5

Figure 8-1 DSP Exciter Chassis Removal and Reinstallation 8-3

Figure 8-2 DSP Exciter Cover Removal and Reinstallation 8-4

Figure 8-3 DSP Exciter Control Board Removal and Reinstallation 8-7

Figure 8-4 DSP Exciter External Interface I/O Board Removal and Reinstallation 8-10

Figure 8-5 DSP Exciter Interface Board Removal and Reinstallation 8-11

Copyright © 1998 Glenayre

Copyright © 1998 Glenayre

d1021_ti.lot

List of Tables

Table 1-1 Applicable Documents 1-1
Table 2-1 Exciter Specifications 2-1
Table 3-1 Part Numbers of VCO/RF Amplifier Boards 3-2
Table 3-2 Part Numbers of Interface Boards 3-2
Table 3-3 Part Numbers of Interface I/O Boards 3-3
Table 3-4 Assembly and Control Board Numbers 3-3
Table 4-1 DSP Exciter I/O Connectors 4-2
Table 4-2 VT100 Interface Connector J3 Pin Assignments 4-2
Table 4-3 Control Board Connector J6 Pin Assignments 4-3
Table 4-4 Exciter Control Board Jumper Positions 4-3
Table 6-1 Exciter RF/Main Circuit Frequencies 6-1
Table 7-1 Deviation and Offset Programming 7-3
Table 9-1 Interface Board Connector J4 (QT-1000) 9-3
Table 9-2 Receiver Connector J5 Pin Functions QT-1000 with External I/O Board 9-4
Table 9-3 Remote Select Input vs. Channel (QT-1000) 9-4
Table 9-4 Remote Select Input vs. Mode (QT-1000) 9-4
Table 9-5 Interface Board Connector J4 (Standard) 9-7
Table 9-6 Remote Select Input vs. Channel (standard) 9-7
Table 9-7 Remote Select Input vs. Mode (standard) 9-8
Table 9-8 Interface Board Connector J2 9-9
Table 9-9 Interface Board Connector J1 9-9
Table 9-10 Remote Select Input vs. Channel (I20) 9-10
Table 9-11 Remote Select Input vs. Mode (I20) 9-10

Copyright © 1998 Glenayre

Copyright © 1998 Glenayre

d1021_s1

1 GENERAL

1.1 Manual Scope

This manual provides information for the Glenayre DSP exciter and contains information on exciter connection, setup, and maintenance. Discussions and specifications include the following:

- exciter specifications
- relevant part numbers
- setup requirements
- operational theory
- maintenance issues
- QT-1000 interface option
- standard interface option
- I20 interface option.

1.2 Applicable Documents

This manual is incomplete without the document shown in *Table 1-1, Applicable Documents.*

Table 1-1 Applicable Documents

Document	Part number	Description
DSP VDT Menus	9110.00259	This manual describes the features of the exciter user interface software.

1.3 Glenayre Locations

For an updated list of Glenayre locations, refer to
`www.glenayre.com/corporate/contacts/default.asp` .

Copyright © 1998 Glenayre

U.S.A.
Glenayre Customer Service - RF
One Glenayre Way
Quincy, Illinois 62301 USA
Phone: (217) 223-3211
Fax: (217) 223-3284

CANADA
Glenayre Customer Service - RF
1570 Kootenay Street
Vancouver, BC V5K 5B8 Canada
Phone: (604) 293-1611
Fax: (604) 293-4301

UNITED KINGDOM
Glenayre Electronics (UK) Ltd.
Unit 22 Challenge House
Sherwood Drive, Bletchley
Milton Keynes, MK3 6JD UK
Phone: 44 1 908 644 642
Fax: 44 1 908 644 643

SINGAPORE
Glenayre Electronics Singapore Pte. Ltd.
Block 5012 Ang Mo Kio Avenue 5
TechPlace II Unit 0503
Singapore 2056
Phone: (65) 481-1828
Fax: (65) 481-2838

1.3.1 Product Warranty Information

Glenayre warrants to the original purchaser that Glenayre products are free from defects in material or workmanship for a period of two years from the original invoice date, subject to the provisions herein. Glenayre will repair or replace at its option, FOB our factory, free of charge within one year from the date of shipment, any component, assembly or subassembly of our manufacture found to be defective under conditions of normal use. The unit, if repaired, will be returned to its original specifications. Failures caused by unauthorized modifications, *force majeure*, lightning, physical, environmental, or electrical damage including use with incompatible equipment are specifically excluded from this warranty. Glenayre disclaims any and all liability for loss or other damage whether direct, consequential or of any nature whatsoever, resulting from product failure.

This warranty is in lieu of all other warranties expressed or implied and covers only those items manufactured by Glenayre. Equipment supplied by, but not manufactured by Glenayre, is subject only to any warranty offered by the manufacturer of said equipment.

1.3.2 Service Warranty Information

Return of a defective item must be authorized by Glenayre prior to shipment. A Return Authorization number can be obtained from Glenayre Customer Service. When requesting a Return Authorization number, give the serial number of the unit. A description of the fault should accompany the unit on its return and the RA number must be shown on labels attached to the item(s). The cost of shipping to Glenayre is to be paid by the customer. Shipping from Glenayre will be prepaid by the customer, and shipped via surface mail. If express shipping is required, the unit will be shipped collect.

Any repair service performed by Glenayre under this limited warranty is warranted to be free from defects in material or workmanship for ninety days from the date of repair. All other terms of this limited warranty apply to the service warranty.

Copyright © 1998 Glenayre

d1021_s2

2 SPECIFICATIONS

Refer to *Table 2-1*, which lists the DSP exciter specifications.

Where possible, EIA or I-EIS A measuring methods were used in determining specifications. Note that some specifications are not addressed by either set of standards or the prescribed methods were impractical.

Table 2-1 Exciter Specifications

Characteristic	**Condition**	**Specification**
Adjacent-channel noise	20-kHz channel spacing, analog mode, per ETS 300 086, 7.5	-70 dBc
	20-kHz channel spacing, in FSK mode, per ETS 300 113, 8.5	-70 dBc
	12.5-kHz channel spacing, analog mode, per ETS 300 086, 7.5	-60 dBc
	12.5-kHz channel spacing, FSK mode, per ETS 300 113, 8.5	-60 dBc
Spurious output	Per ETS 300 113, 8.6 Per ETS 300 086, 7.6	-90 dBc -90 dBc
RF output power	Keyed	250 mW nominal
Carrier frequency stability	Steady state, -30° to +60° C	10 MHz reference, int=0.005 ppm/yr, ext=0.1 ppm/yr
FSK frequency/modulation stability	Relative to carrier frequency stability	+/- 10 Hz max
FSK adjustment accuracy		+/- 10 Hz
Offset resolution		1 Hz
Number of channels		Up to 16, depending on interface board and controller
Audio input		-25 to +10 dBm
	Impedance with transformer	600 ohm or 5k ohms balanced
Audio response	Flat, 50 to 2800 Hz	+/- 0.5 dB
	preemphasized 6 dB per octave, 300 to 3000 Hz at 60% deviation	+/- 0.75 dB
Audio distortion (1-kHz reference at 60% deviation)	25-kHz channel spacing	Less than 1.5%

Copyright © 1998 Glenayre

Table 2-1 Exciter Specifications (continued)

Characteristic	**Condition**	**Specification**
Audio response (tracking/units)	Level	0.1 dB max
FM hum and noise (1-kHz reference at 60% deviation)	25-kHz spacing flat, 15-kHz bandwidth	-40 dB
	25-kHz channel spacing preemphasized, 300 to 3000 Hz	-55 dB
AM hum and noise		-34 dB
Modulation types		Analog, 2-level FSK, 4-level FSK available with some interfaces
Channel spacing step size (kHz)	Software-dependent	5, 6.25, 12.5, 20, 25
Emissions	FCC	15K0F2D, 16K0F1D, 16K0F3E
Power requirement	22-29 Vdc	Less than 3 A
Humidity	Noncondensing	0 to 95% relative
External 10-MHz reference input	Level	2 Vp-p min
	Impedance	50 ohms
	Spurious above 8 MHz	-65 dBc max
	Spurious below 8 MHz	-50 dBc max
Weight		4.8 lb (2.2 kg)
Dimensions		8.75 in (22.25 cm) d x 19 in (48.25 cm) w x 1.75 in (4.5 cm) h
Temperature range	Operating	-30° to +60° C
	Storage	-55° to +70° C
Maximum elevation		To 10,000 ft (3050 m)

Copyright © 1998 Glenayre

d1021_s3

3 DESCRIPTION

3.1 General

The DSP exciter contains a microprocessor that allows remote or local control of the exciter and consolidates logic for varying degrees of PA control and monitoring through a video display terminal (VDT). Operating characteristics of the exciter are controlled by the selection of hardware options. It is frequency-selectable by specifying the appropriate internal frequency-determining hardware and software. It is also capable of communicating with several operating protocols through the proper selection of interface boards.

Refer to *Table 3-1*, *Table 3-2*, *Table 3-3*, and *Table 3-4* for pertinent part numbers.

3.2 Physical Description

The exciter front panel contains eight LEDs, three adjustments, and one connector (also see section 5). The exciter chassis contains three circuit boards and space for an oscillator (not used with some controllers).

Refer to *Figure 3-1*, which shows the exciter rear panel. The back panel contains three BNC connectors J3/J7/J8, DB-15 connector J6, and terminal board TB1 as standard items. Other back-panel connectors vary depending on which interface and I/O boards are installed. *Figure 3-2* shows a top view of the exciter with its cover removed.

The I/O boards comprise the means to connect various controllers to the DSP exciter.

3.3 Simplified Block-Diagram Description

Refer to *Figure 3-3* in the following discussion. Inputs from the transmitter controller usually are one or two data bits, two channel-select bits, and keying input. Outputs to the controller are keying output indicator, various fault outputs, forward-power sample, and reflected-power sample.

Copyright © 1998 Glenayre

Table 3-1 Part Numbers of VCO/RF Amplifier Boards

transmitter model	VCO/RF-amplifier board frequency band (MHz)	VCO board assembly part No.	transmitter model	VCO/RF-amplifier board frequency band (MHz)	VCO board assembly part No.
GL-T85/8601	929-941	263-0082-072	GL-T8311 GL-T8411 GL-T8611	138-148	2100.00088
	936-948	263-0082-070		142-152	2100.00089
	924-936	263-0082-069		147-157	2100.00090
GL-T85/8600	900-960 (wb)	263-0082-051/052/053/054/055/062		157-167	2100.00092
	948-960	263-0082-055		152-162	2100.00091
	936-948	263-0082-054		167-175	2100.00094
	929-941	263-0082-062		162-172	2000.00558
	924-936	263-0082-053	GL-T8311EC GL-T8411EC GL-T8311E GL-T8411E	138-148	2100.00088
GL-T8341 GL-T8541 GL-T8641	445-470	2000.00189		142-152	2100.00089
GL-T83/8531	320-330	263-0082-049		147-157	2100.00090
GL-T83/8521	275-285	263-0082-047		157-167	2100.00092
				152-162	2100.00091
				167-175	2100.00094
				162-172	2000.00558

Table 3-2 Part Numbers of Interface Boards

DSP exciter-to-controller interface boards	Interface board part No.
QT-1000 interface bd	265-0082-007
Standard interface bd	263-0082-036
I20 interface bd	265-0082-015

Copyright © 1998 Glenayre

d1021_s3

Table 3-3 Part Numbers of Interface I/O Boards

Interface I/O board (control type)	Interface I/O board part No.
QT-1000 Interface I/O bd	261-0082-003
Standard Interface I/O bd	261-0082-004
I20 Interface I/O bd	2000.00436

Table 3-4 Assembly and Control Board Numbers

Exciter assembly No.	Control board No.
0100.02020 (88 us)	2000.02090

Copyright © 1998 Glenayre

v0343.hgl

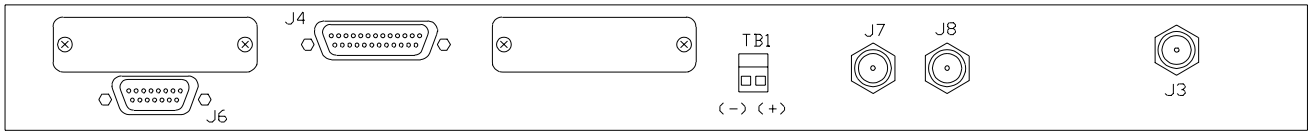

(DSP EXCITER W/STANDARD INTERFACE BOARD)

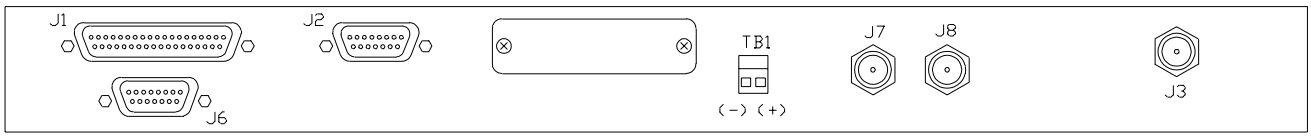

(DSP EXCITER W/C2000:I20 INTERFACE BOARD)

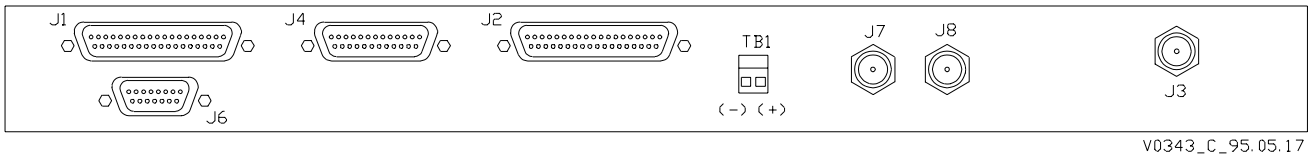

(DSP EXCITER W/QT-1000 INTERFACE BOARD)

Figure 3-1 DSP Exciter Rear View

Copyright © 1998 Glenayre

v0344.hgl

d1021_s3

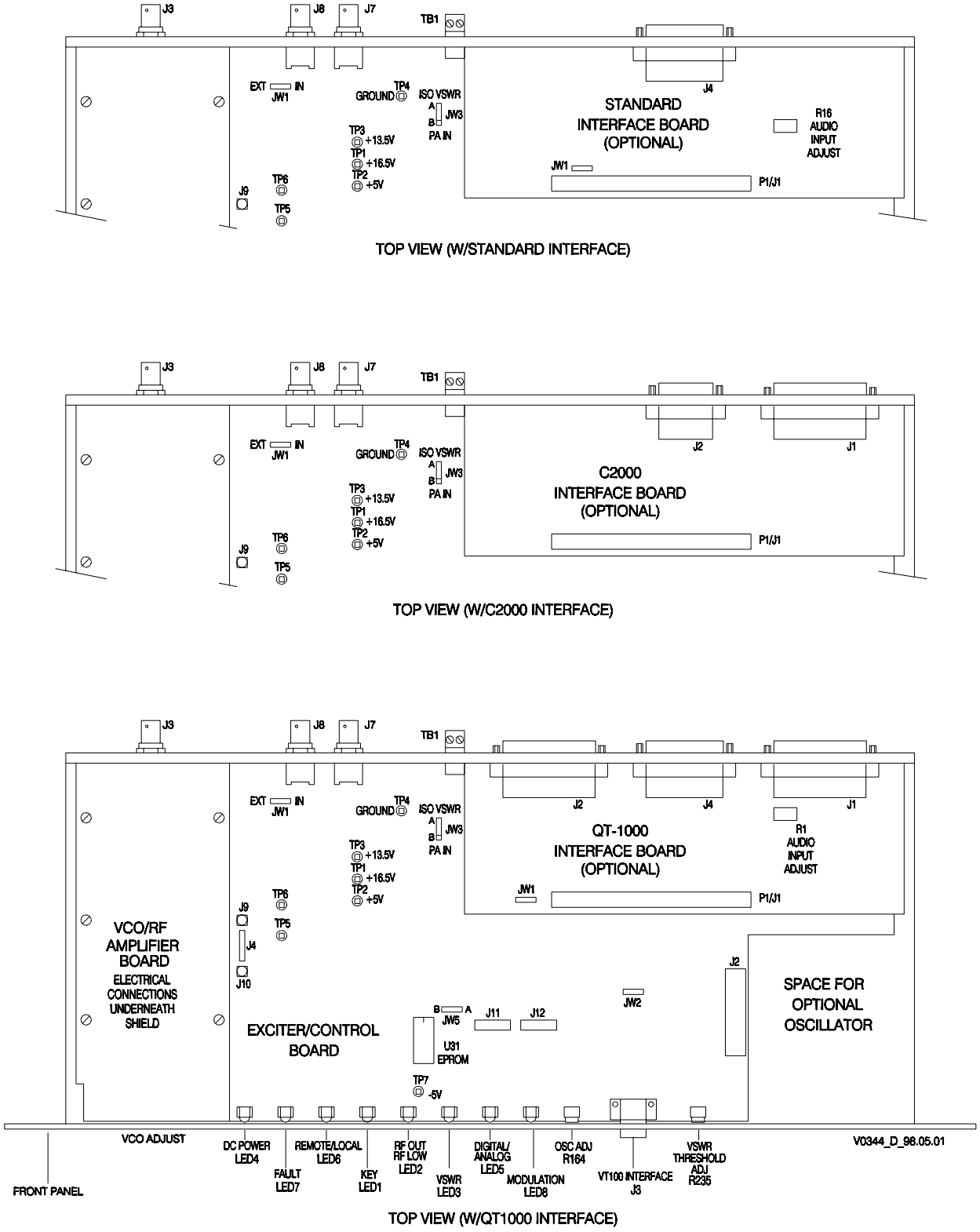

Figure 3-2 DSP Exciter Top View
with Internal Controls and Indicators

Copyright © 1998 Glenayre

v0251.hgl

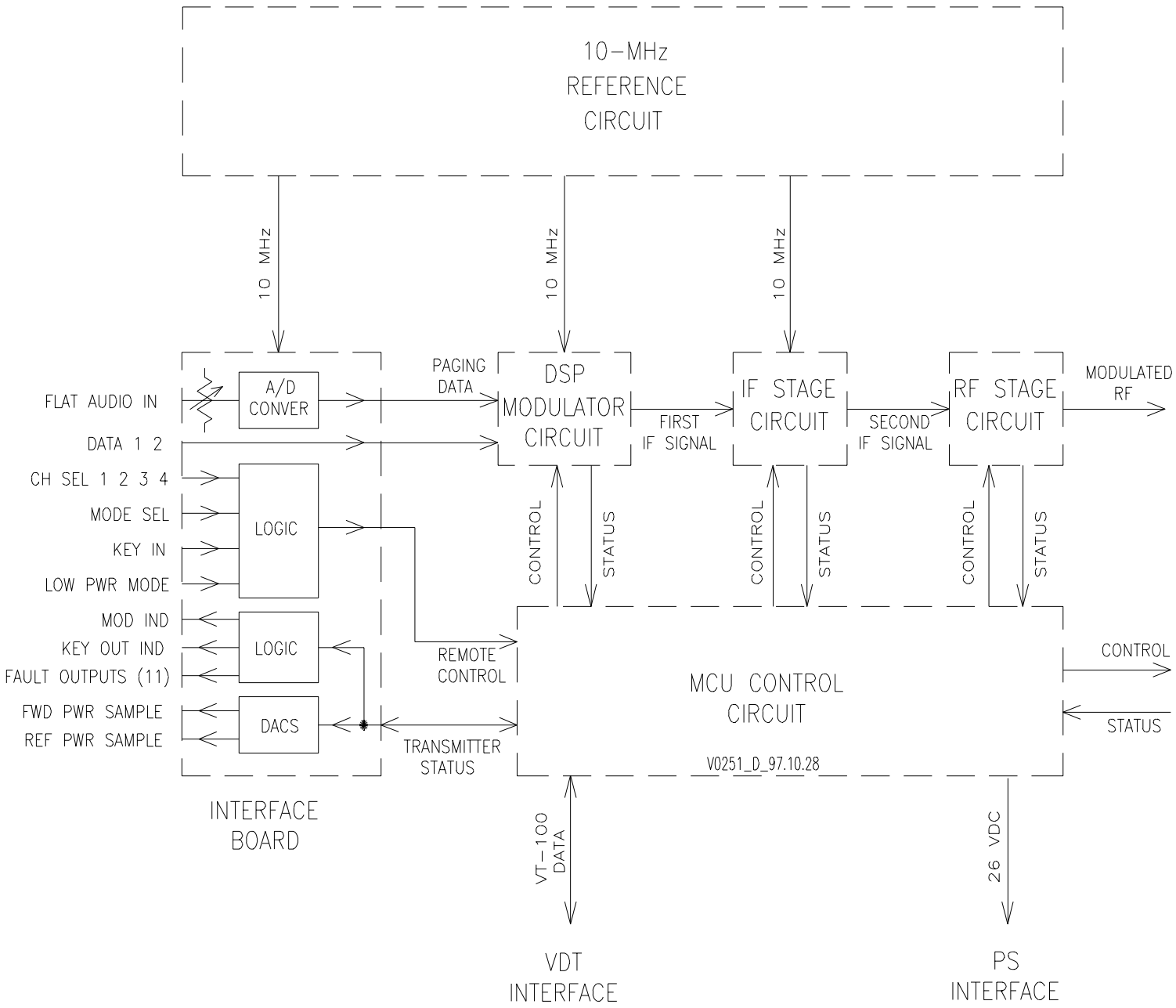

Figure 3-3 DSP Exciter Simplified Functional Diagram

Copyright © 1998 Glenayre

d1021_s4

4 INSTALLATION AND SETUP

4.1 Precautions and Hazards

Caution

Pc boards within this assembly use static-sensitive components. Follow IC-handling precautions.

Caution

The exciter contains internal memory which is used to characterize exciter operation. Upon exciter replacement, ensure that replacement exciter contains appropriate items in its memory.

4.2 Test Equipment and Tools Required

Common hand tools are required for disassembly and reassembly. An RFI-immune voltmeter may be required for voltage measurement. An in-line current meter may also be necessary for troubleshooting. A 50-ohm test load rated for 5 watts or more, an RF wattmeter rated and scaled appropriately, and RF coaxial cables are useful when verifying RF output.

4.3 Component and Adjustment Locations

Figure 3-2, DSP Exciter Top View with Internal Controls and Indicators, shows the location of assemblies, internal user-adjustable controls, and I/O locations. Note: most adjustments are performed via the front-panel VT100 interface.

4.4 Installation

4.4.1 Inspection

Inspect exciter to ensure air flow is not obstructed and cables and wires are securely fastened to their respective connectors.

4.4.2 Power Requirement

The DSP exciter, when used as a component of a transmitter, draws its power from system wiring. Current draw is less than three amperes at 22 to 29 volts. It is normally powered by the transmitter power supply but can be powered by an auxiliary supply.

Copyright © 1998 Glenayre

4.4.3 Input/Output Connections

Figure 3-1 shows the locations of I/O connectors; *Table 4-1* lists I/O connectors and describes their functions. Normally the exciter is delivered as part of an entire transmitter and has already been installed in a rack, with all connections already made, except for connections to equipment that was not installed in the rack before shipment. If I/O connections are required, refer to the system-interconnect diagram and other instructions in the transmitter manual.

4.4.4 Signal Functions

See *Table 4-1*, which references other tables that describe pin-by-pin functions of multipin connectors, for details. *Figure 4-1* shows interconnections among internal assemblies.

Table 4-1 DSP Exciter I/O Connectors

Stencil/Connector	Description	Additional Detail
VT100 INTERFACE: J3	VT100 interface to VDT (front)	*Table 4-2*
RF OUT: J3	RF out, on frequency	*Figure 6-1*
QT-1000 interface I/O J4	Interface to QT-1000 interface board	*Table 9-1*
QT-1000 interface I/O J5	DB-9 connector, to receiver	*Table 9-2*
Standard interface I/O J4	Interface to standard interface I/O board	*Table 9-1*
I20 (C2000) interface I/O J2	Interface to C2000 interface I/O board	*Table 9-8*
I20 (C2000) interface I/O J1	Interface to C2000 interface I/O board	*Table 9-9*
PA CONTROL: J6	Connects to PA	*Table 4-3*
ISOLATOR IN: J7	VSWR input from PA	*Figure 3-1*
10 MHZ IN: J8	External reference input from interface	*Figure 3-1*
+26 VDC: TB1	Exciter input power, +22-29 Vdc	*Figure 3-1*

Table 4-2 VT100 Interface Connector J3 Pin Assignments

J3-X (front)	Signal	Description
2	TXD	Transmit data line
3	RXD	Receive data line
5	GND	Ground
1,4,6,7,8,9	Not used	

Copyright © 1998 Glenayre

d1021_s4

Table 4-3 Control Board Connector J6 Pin Assignments

J6-X	Signal	Description	J6-X	Signal	Description
1	A/D1+	Multiplex analog input from PA No. 1 multiplexer	9	A/D2+	Multiplex analog input from PA No. 2 multiplexer
2	A/D3+	Multiplex analog input from PA No. 3 multiplexer	10	A/D4+	Multiplexed analog input from PA No. 4 multiplexer
3	AGC REF+	AGC reference voltage output to PA, 1-12 Vdc	11	PA FAULT	PA fault input, HI=fault
4	PA GROUND	No connection	12	PA GROUND	No connection
5	PA GROUND	No connection	13	INPUT SELECT 1	One of four select outputs to PA multiplexers, LO=2^0 digit enabled for mux input decoder
6	INPUT SELECT 2	One of four select outputs to PA multiplexers, LO=2^1	14	INPUT SELECT 3	One of four select outputs to PA multiplexers, LO=2^2 digit enabled for mux input decoder
7	KEY OUT	Key output to PA	15	AUX LATCH ENABLE	Latch-enable output to PA multi-plexers, LO=mux input decoder reads the three select inputs. Not used with E and EC models.
8	REF SAMPLE	Reflected-power sample input from PA			

4.4.5 Switches and Jumpers

Figure 3-2 shows the locations of user-adjustable switches and jumpers. See *Table 4-4* for a list of software-related jumper positions found on the exciter/control board. No switches are available to maintenance personnel.

Table 4-4 Exciter Control Board Jumper Positions

Jumper	Pre version 2.10 software	Version 2.10/later software
JW1	Set to A for external 10-MHz oscillator	Set to A for external 10 MHz oscillator
	Set to B for internal 10-MHz oscillator	Set to B for internal 10 MHz oscillator
JW2	Set to A for password protection	Set to A for password protection
	Set to B to bypass password protection	Set to B to bypass password protection
JW3	Set to A for external VSWR protection	Always set to B (for internal and/or external VSWR protection)
	Set to B for internal VSWR protection	
JW5	must be set to A	must be set to A

Copyright © 1998 Glenayre

4.5 Setup

Note

When doing a setup for a wideband DSP exciter, the net channel change time must be set for 300 ms.

Refer to the DSP exciter VDT menus and user manual for transmitter-control setup information. All setup is done via the front-panel VT100 interface.

4.6 Ultimate Disposition

Caution

This equipment may contain hazardous materials. Check with the local EPA or other environmental authority before disposing of this equipment.

4.7 Grounding

As viewed from the back, the exciter chassis has a ground stud on the right side of the rear panel. It is shipped from the factory properly connected to ground with a green or green-with-yellow-stripe wire. In newer cabinets, the chassis ground wire is connected to a grounding bus inside the cabinet. The ground bus is connected to a ground stud on the interface plate mounted to the top of the cabinet.

Caution

Improper, inadequate, or faulty grounding can cause erratic equipment operation. These conditions can also perpetuate equipment failure.

Copyright © 1998 Glenayre

v0164.hgl

d1021_s4

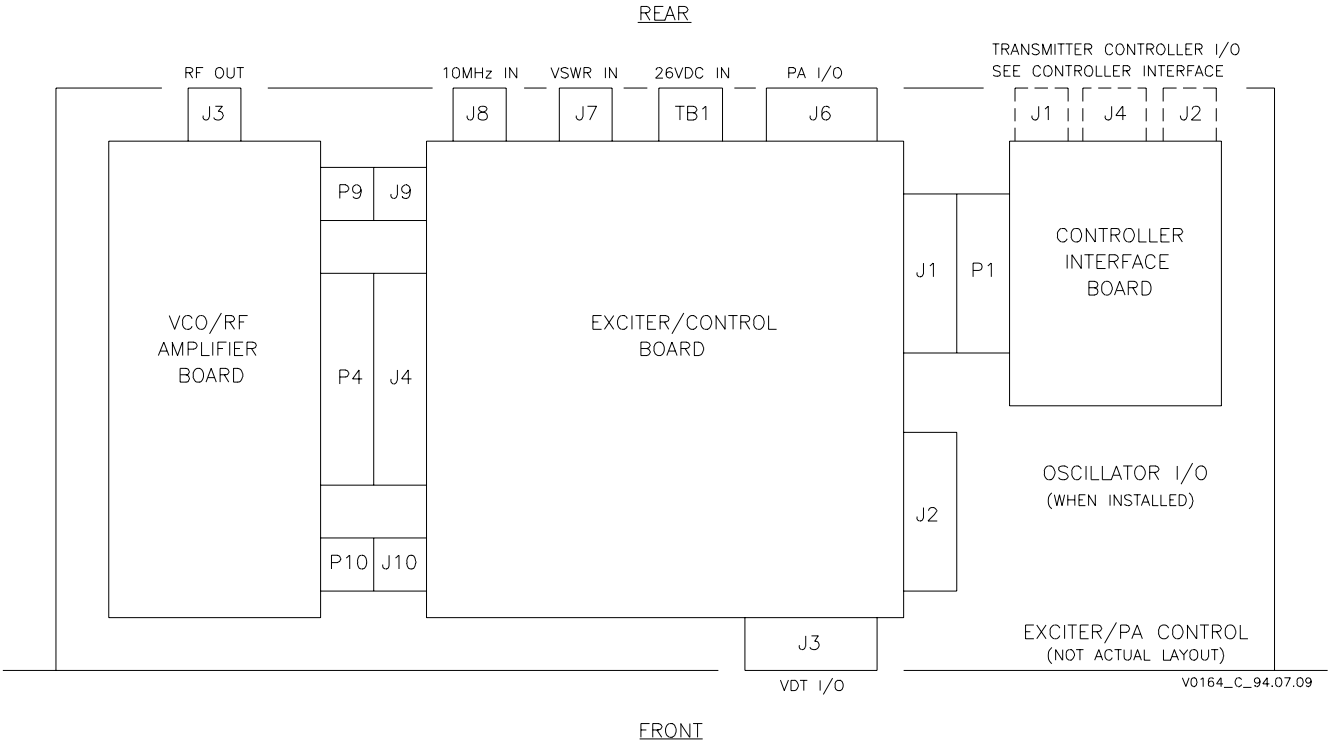

Figure 4-1 DSP Exciter/PA Control Circuit Boards Interconnection Diagram

Copyright © 1998 Glenayre

Copyright © 1998 Glenayre

d1021_s5

5 OPERATION

5.1 Front-Panel Controls and Indicators

Refer to *Figure 5-1* which shows and describes front-panel indicators. The DSP exciter contains no front-panel user controls. Front-panel access to VCO adjustment and VSWR-detection threshold is for maintenance purposes only.

5.2 Operating Instructions

The transmitter controller operates the exciter and transmitter in an unattended manner during normal system operation. The VT100 interface with a VDT enables the maintenance technician to perform maintenance and observe operational parameters. Refer to the DSP exciter VDT menus and user manual for detailed operating information.

Copyright © 1998 Glenayre

mod.v0079.hgl

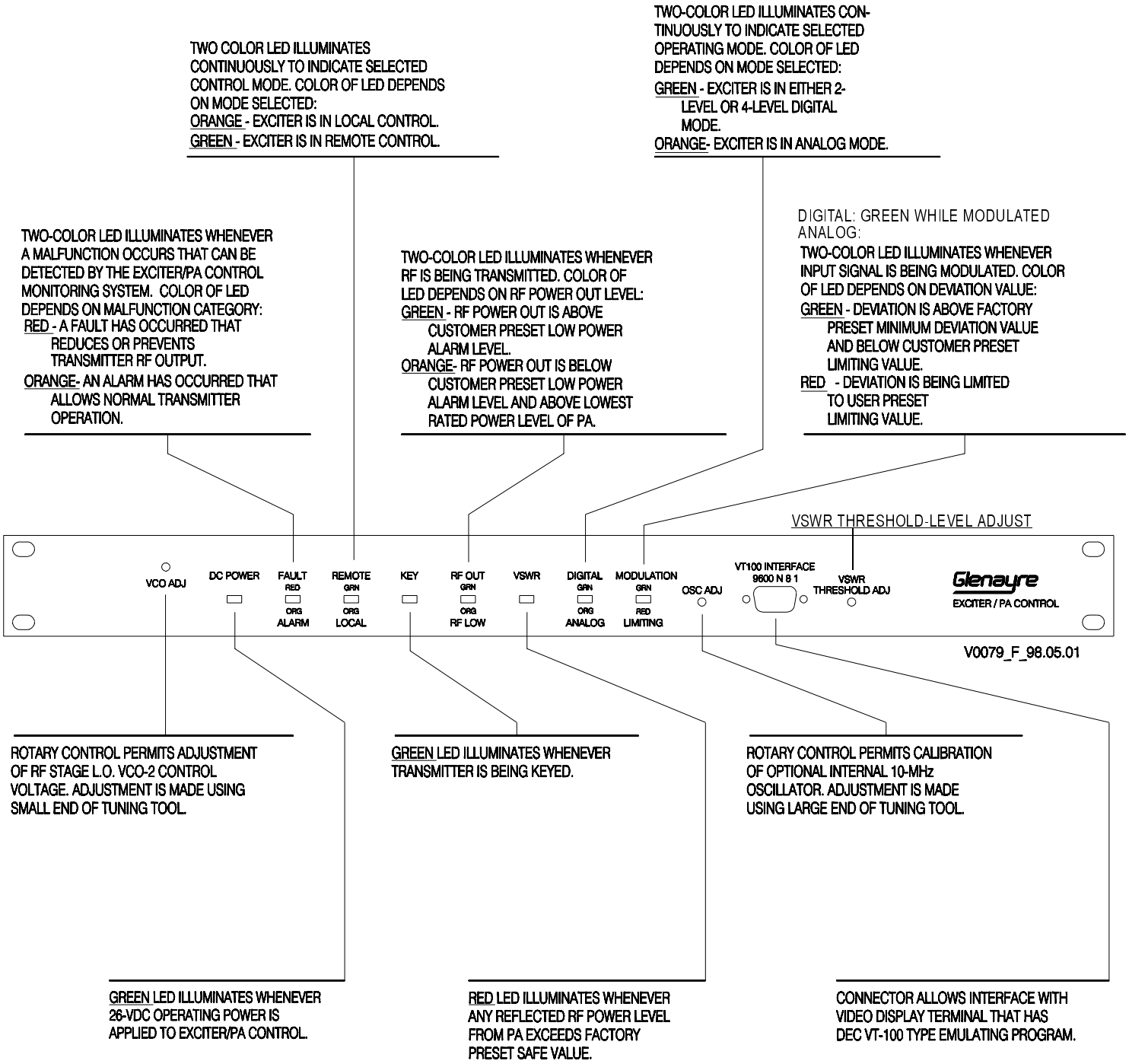

Figure 5-1 Front-Panel Controls and Indicators

Copyright © 1998 Glenayre

d1021_s6

6 THEORY OF OPERATION

6.1 Exciter/PA Control

Refer to *Figure 6-1*, which describes signal flow in the DSP exciter with the transmitter controller interface. The following major paragraphs describe the operation of the major items within the figure. Additional detailed figures are referenced, as required.

6.1.1 Reference Source

The 10-MHz reference signal is provided by the transmitter controller via J8 on the exciter/control board or by an optional internal reference oscillator. All other inputs and outputs, except for RF output, are routed through the interface board.

6.1.2 Main Circuit Frequencies

The VCO/RF amplifier board installed determines the frequency for the RF output. *Table 6-1* lists VCO/RF amplifier board frequencies and the corresponding exciter/output frequencies.

Table 6-1 Exciter RF/Main Circuit Frequencies

Exciter Output Frequency (MHz)	First IF Frequency (kHz)	Second IF Frequency (MHz)	VCO-1 Frequency (MHz)	VCO-2 Frequency (MHz)
900-960	100	90	89.9	810-870
445-470	100	90	89.9	535-560
275-330	100	90	89.9	365-420
130-180	100	90	89.9	220-270

6.1.3 Controller Interface Functions

The exciter interfaces with the transmitter controller through the exciter interface I/O board. Alarm signals, consisting of transmitter alarm, fault, and status signals, are supplied directly to the transmitter controller. See *Paragraph 9, OPTIONS*, for details.

6.2 Interface to Controller

Refer to *Section 9, OPTIONS*, for details.

Copyright © 1998 Glenayre

v0123.hgl

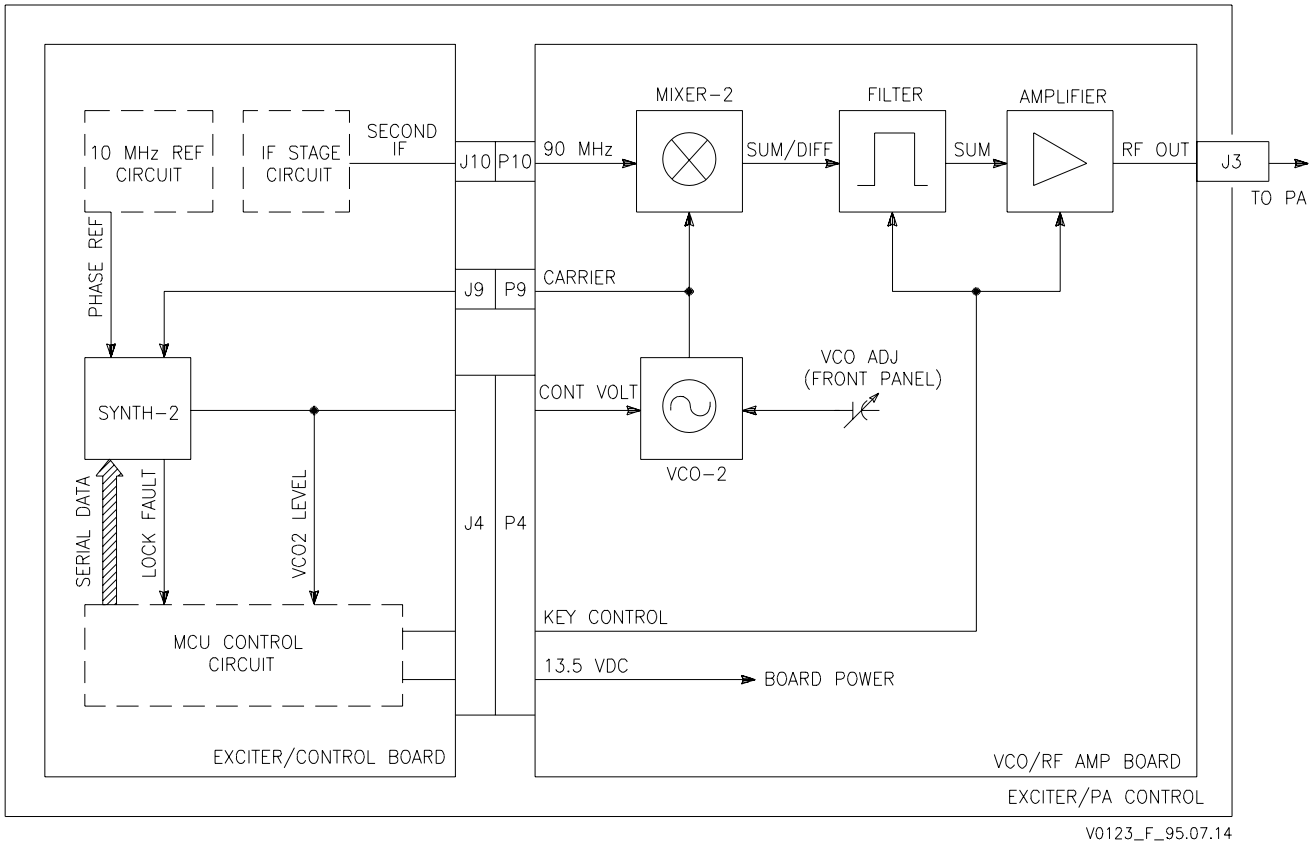

Figure 6-1 DSP Exciter RF Stage Functional Diagram

Copyright © 1998 Glenayre

d1021_s6

6.3 DSP Modulator

6.3.1 General

The DSP modulator circuit converts the data into the first IF signal, which is fully modulated. The IF stage circuit converts the first IF signal into the second IF signal. The RF stage circuit converts the second IF signal into the RF output. Ten MHz is used as frequency reference by each conversion stage. The DSP modulator is the portion of exciter circuitry between the controller interface and the IF stage. The DSP modulator uses digital signal processing to modulate and up-convert the paging information into the first IF signal. The modulation type depends on the transmitter operating mode. The IF stage is the portion of exciter circuitry between the DSP modulator and the RF stage. The IF stage uses heterodyne mixing to generate the optimum second IF signal frequency, which depends on the requirement of the VCO/RF amplifier board installed. The MCU control circuit is the command and control hub of the transmitter. The type of control software depends on the transmitter frequency and power output. The following text describes main exciter circuitry that works for all software programs, modulation schemes, and IF signal frequencies. *Figure 6-2* shows additional details.

6.3.2 DSP Modulator Signal Flow

Refer to *Figure 6-2* in the following discussion. The inputs that provide the paging information to the DSP modulator circuit are digitized audio and FSK data, supplied by the controller interface circuit through connector pair P1/J1. Digitized audio arrives as serial data. FSK data arrives as parallel data. The DSP modulator circuit processes the digitized audio in the analog mode or the FSK data in the digital mode. The result of this processing is the exciter's first IF signal, which is applied to the IF stage circuit. To produce the first IF signal, the DSP modulator contains two DSPs (a signal modulator and a quadrature modulator), a digital-to-analog converter, and a read-only memory. The following text describes these four components and their signal flow.

6.3.2.1 Digital Signal Modulator

The signal modulator (SM) generates modulation that contains the paging information, which is supplied by digitized audio or FSK data. The digitized audio is input into a serial input port. An external edge detector is required to input the FSK data. The SM converts one of the data inputs into a modulated signal, which is mathematically represented within the SM as a vector signal, defined by its rectangular coordinates. These coordinates, commonly known as I and Q, are supplied to the digital quadrature modulator as 16-bit parallel data. The modulated signal output from the SM depends on the following signal characteristics:

- modulation scheme
- frequency response or rise time
- input logic or data inversion
- deviation level or bandwidth
- offset from carrier frequency
- analog gain and deviation limit.

Copyright © 1998 Glenayre

The SM also performs all communications between the DSP modulator circuit and the MCU control circuit. These communications are through the SM 16-bit parallel data port. External input and output latches expand the capabilities of this port. Control inputs consist of commands such as reset, request status, set paging signal parameter, change mode, and boot program. Requested status outputs consist of current mode, deviation levels, input level, input gain, modulation detected, and current polarity. Nonrequested status outputs indicate the existence of analog limiting and modulation.

6.3.2.2 Digital Quadrature Modulator

The digital quadrature modulator (DQM) does interpolation and up-conversion of the modulated signal. Modulated signal input to the DQM is applied by the SM as I and Q components (16-bit parallel). The DQM performs trigonometric computations at a much higher sampling rate, which determines first-IF signal value and frequency. The modulated signal output from the DQM is supplied from its serial data port to the D/A converter.

6.3.2.3 Digital-to-Analog Converter

The digital input to the digital-to-analog (D/A) converter is the modulated signal from the DQM. This data arrives as serial data. The analog output from the D/A converter is the first IF signal. In addition to the IF stage circuit, the first IF signal is supplied to the MCU control circuit, where it is rectified and filtered to generate fault logic.

6.3.2.4 Read-Only Memory

A programmable and erasable read-only memory (PEROM) stores the modulator programs for both DSPs. These programs are transferred to the SM when the exciter is booted (powered up), then the SM transfers the program to the DQM. The nonvolatile PEROM retains its program for years. Its memory may be individually reprogrammed without erasing the entire chip.

6.4 IF Stage

Refer to *Figure 6-1*. The input to the IF stage is the first IF signal, which is supplied by the DSP modulator circuit. The first IF signal carries all the paging information on an intermediate carrier frequency. The IF stage performs direct up-conversion of the first IF signal to create the second IF signal, which carries the same paging information as the first IF signal, but on a higher carrier frequency. The second IF signal is applied to the RF stage through connector pair J10/P10. To produce the second IF signal, the IF stage contains mixer-1 and filter circuits. Supporting these circuits are VCO-1 and synthesizer-1 circuits. *Figure 6-2* and *Figure 6-3* show additional details.

6.4.1 Filter-1

This is an active filter circuit that acts as an anti-aliasing filter. It provides at least 20 dB of rejection at the sampling image frequency (300 kHz). Output of this filter goes to mixer-1.

Copyright © 1998 Glenayre

d1021_s6

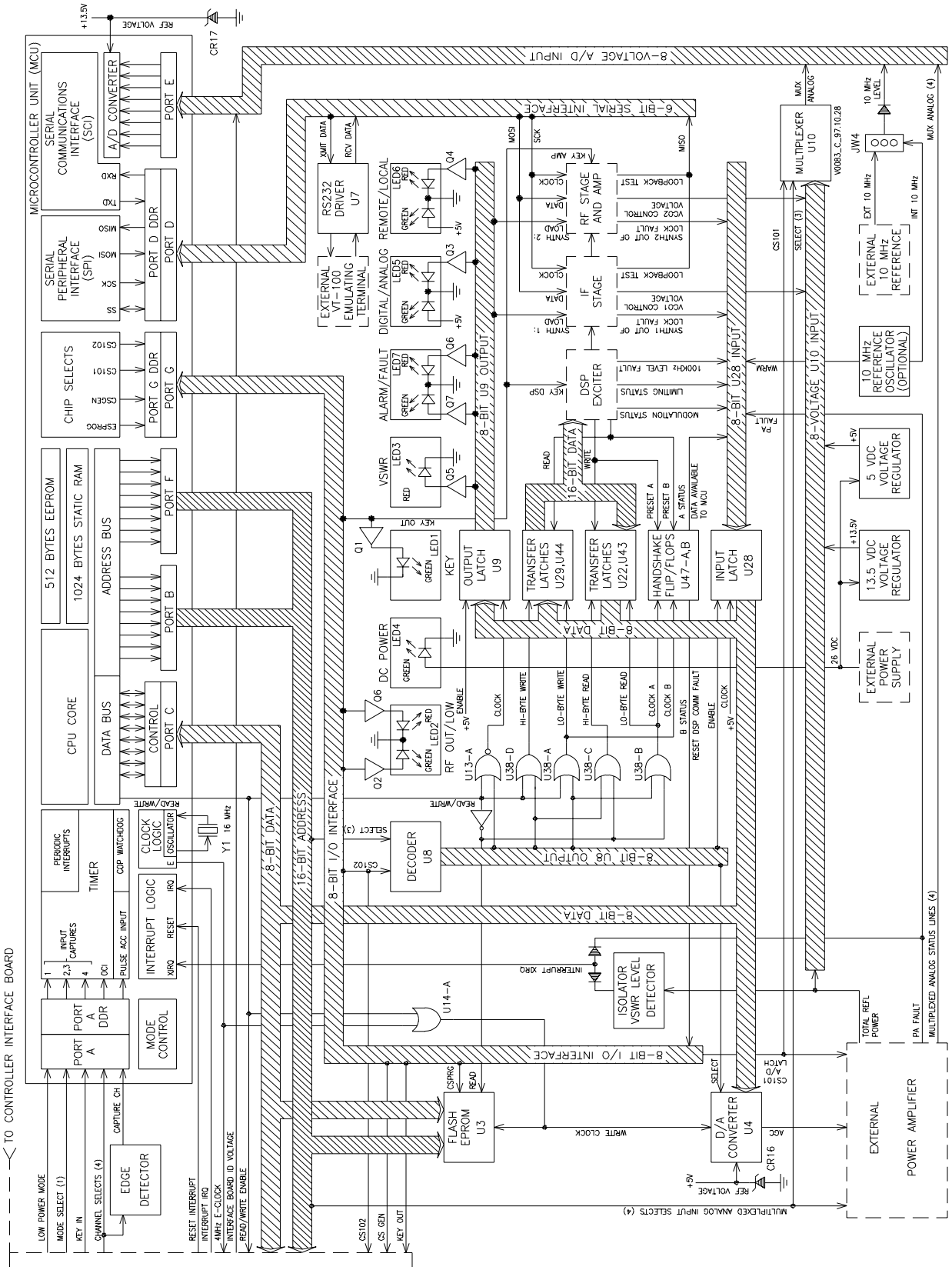

Figure 6-2 DSP Exciter MCU Circuit Functional Diagram

Copyright © 1998 Glenayre

6.4.2 Mixer-1

Mixer-1 is the first heterodyne mixer. Inputs to mixer-1 are a modulated IF and a carrier. The modulated IF input is the first IF signal. The carrier input is supplied by VCO-1. The output from mixer-1 consists of two modulated carriers that are sums and difference frequencies of the inputs. These two frequencies are applied to the filter circuit.

6.4.3 Filter-2

The filter is centered at the second IF signal frequency with an 18-kHz bandwidth. The input to the filter consists of two modulated carriers. These are sum and difference frequencies supplied by mixer-1. Output from the filter is only the sum frequency. This modulated output is the second IF signal.

6.4.4 VCO-1

VCO-1 is the local oscillator for the IF stage. The input to VCO-1 is a dc control voltage. This voltage controls VCO-1 carrier frequency and is supplied by synthesizer-1. The output from VCO-1 is a sine-wave carrier and is applied to mixer-1.

6.4.5 Synthesizer-1

Synthesizer-1 controls VCO-1 carrier frequency by means of a phase-locked loop (PLL). PLL inputs are a carrier and a phase reference. The reference input is a 10-MHz carrier supplied by the 10-MHz reference circuit. The carrier input is from VCO-1. The PLL output is a dc control voltage. This voltage, set to cause the VCO-1 carrier to lock phase with the reference, is supplied to VCO-1.

Synthesizer-1 also performs all communications between the IF stage circuit and the MCU control circuit. A control input specifies the VCO-1 carrier frequency; this data is received over a serial data link when the exciter is booting or changing channels. Status outputs are a lock fault and a VCO1 level. The lock fault indicates loss of the carrier/reference phase lock. The VCO1 level is the VCO-1 control voltage.

6.5 MCU

Refer to *Figure 6-4*. Control outputs are supplied by the MCU control circuit to the other functional circuits. Likewise, status inputs are applied to the MCU control circuit from the other functional circuits. Discussions of these control and status signals are included with the information on the other major functional circuits. To interface these control and status signals, the MCU control circuit contains an MCU, D/A converter, 8/16 bit converter, read-only memory, and a VSWR-fault detector. To light the front-panel LEDs, the MCU control circuit contains a bank of PNP switching transistors. Refer to *Figure 6-2* and the following text which describes this circuitry and its signal flow.

Copyright © 1998 Glenayre

d1021_s6

6.5.1 Microcontroller Unit (MCU)

The MCU contains a central processing unit (CPU), memories, peripherals, and other hardware on a single chip. The primary internal functions of the MCU and their application in the exciter are described in the following list.

- An eight-bit remote input port accepts discrete low power mode, keyline, and channel selects from the controller interface circuit. An external edge detector is required to input the channel selects.
- Interrupt logic stops or reduces RF transmission when a fault input is received, e.g. a VSWR or PA fault.
- An on-board oscillator/clock generator, driven by an external crystal, times internal MCU functions. A synchronized clock output times external functions.
- The MCU performs most interfacing through a parallel communications link: eight-bit data bus, sixteen-bit address bus, and a read/write line. External input and output latches expand the capability of this link.
- An eight-bit input/output port supplies discrete keyline, RF status, and chip select controls to the exciter and the PA.
- A serial peripheral interface (SPI) supplies synchronous serial frequency data to the IF stage and RF stage circuits. Individual commands load the program into either IF stage's synthesizer-1 or RF stage synthesizer-2.
- An eight-input analog-to-digital (A/D) converter measures voltage inputs from the exciter and the PA. External multiplexers expand MCU analog inputs up to 41.
- A serial communications interface (SCI) exchanges asynchronous serial RS-232 data with the VT100 VDT. An external RS-232 driver buffers the MCU data, allowing it to be exchanged through external connector J3.
- A random-access memory (RAM) temporarily stores transmitter fault and alarm values.
- An electrically-erasable read-only memory (EEPROM) permanently stores transmitter signal parameters.

6.5.2 Digital-to-Analog (D/A) Converter

A D/A converter generates an AGC reference voltage. The D/A converter inputs are data and select logic. The data, supplied by the MCU when the D/A is selected, represents the desired transmitter power output. The D/A converter output is an AGC reference voltage. This voltage represents a level proportional to the desired transmitter power output. The AGC reference voltage, output via J6, is used by the PA to generate an AGC voltage.

6.5.3 8/16-Bit Converter

An 8/16-bit converter allows the MCU eight-bit data bus to communicate with the 16-bit data bus of the DSP modulator circuit. The MCU must perform two read or write procedures, a low byte and a high byte, to each one of the DSP modulator circuits. The converter provides two status outputs to the MCU and DSP modulator. A data-available-to-MCU status indicates that the DSP modulator circuit has written data into the converter that the MCU must read. A data-available-to-DSP status indicates that the MCU has written data into the converter that the DSP modulator circuit must read. If that DSP modulator circuit does not read data that the MCU has written, a DSP communication fault is generated.

Copyright © 1998 Glenayre

6.5.4 Read-Only Memory

A programmable and erasable read-only memory (PEROM) stores the control program for the transmitter. This program is transferred to the MCU when the exciter is booted up. The nonvolatile PEROM retains its program for years. Its memory may be individually reprogrammed without erasing the entire chip.

6.5.5 VSWR-Fault Detector

The exciter receives a VSWR signal from the PA through connector J6. This signal is a rectified dc voltage sample generated by the isolator. The voltage sample is monitored by the MCU to provide the value for the total reflected-power indication. The voltage sample is also monitored by a fault circuit in the exciter. If a factory-preset voltage is exceeded, the fault circuit shuts down the transmitter or reduces power by an interrupt to the MCU.

6.5.6 Alarm Data-to-Logic Conversion

The transmitter controller reads logic alarm inputs; most are stored as data in the MCU control circuit. If the controller interface converts the data to individual logic signals for the controller, data from MCU control representing the alarms is clocked into a pair of latches. The latches convert the data into continuous logic signals. These signals and others control a bank of NPN switching transistors that supply the actual logic signal to the controller. Control logic gates convert chip controls from the MCU into a clock input for the latches.

6.5.7 Alarm Data-to-Logic Conversion

The transmitter controller reads logic alarm inputs; most are stored as data in the MCU control circuit. If the controller interface converts the data to individual logic signals for the controller, data from MCU control representing the alarms is clocked into a pair of latches. The latches convert the data into continuous logic signals. These signals and others control a bank of NPN switching transistors that supply the actual logic signal to the controller. Control logic gates convert chip controls from the MCU into a clock input for the latches.

Copyright © 1998 Glenayre

d1021_s6

Copyright © 1998 Glenayre

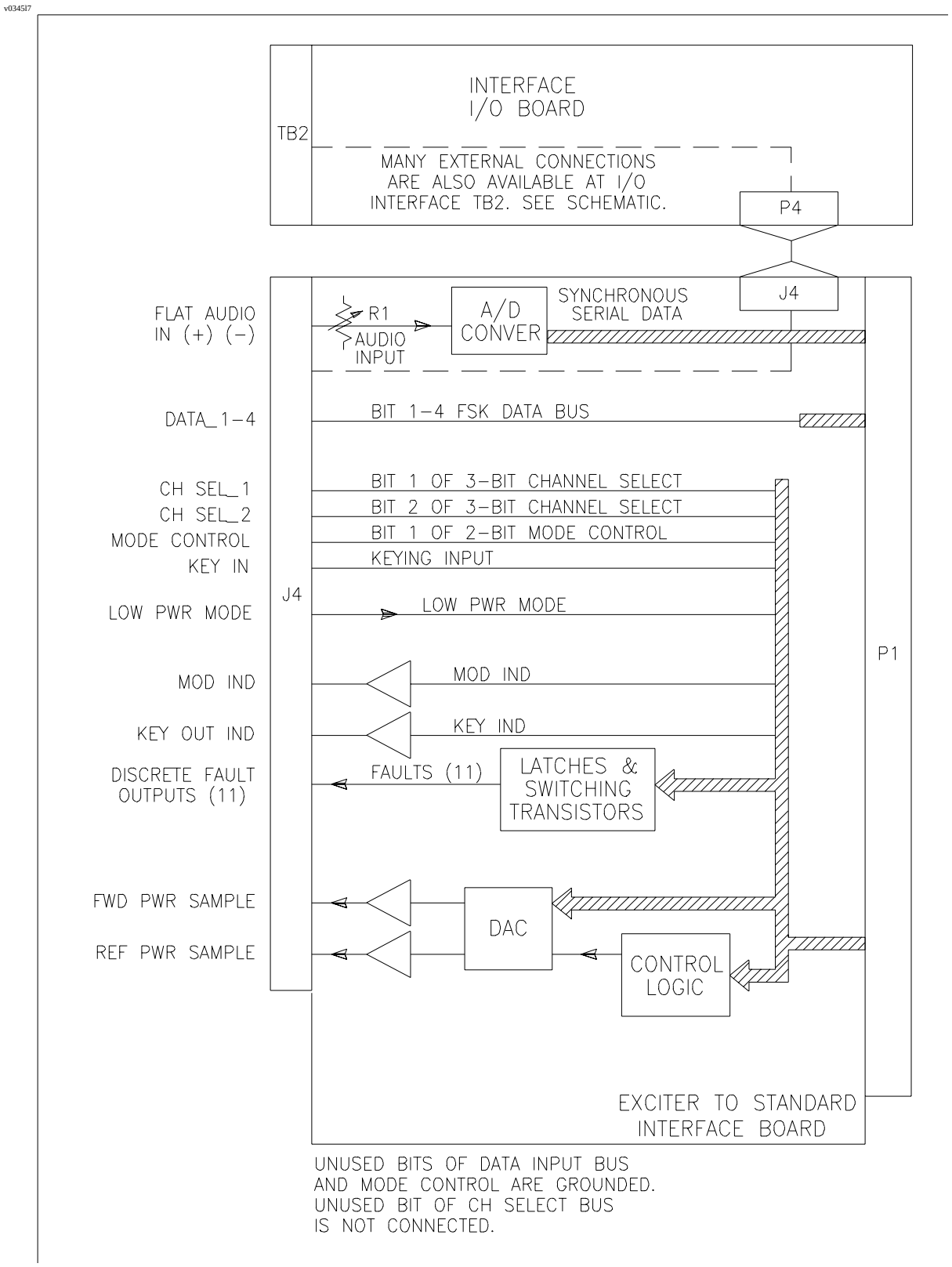

Figure 6-3 DSP Exciter-to-Controller Functional Diagram

Copyright © 1998 Glenayre

v0345R.hgl

d1021_s6

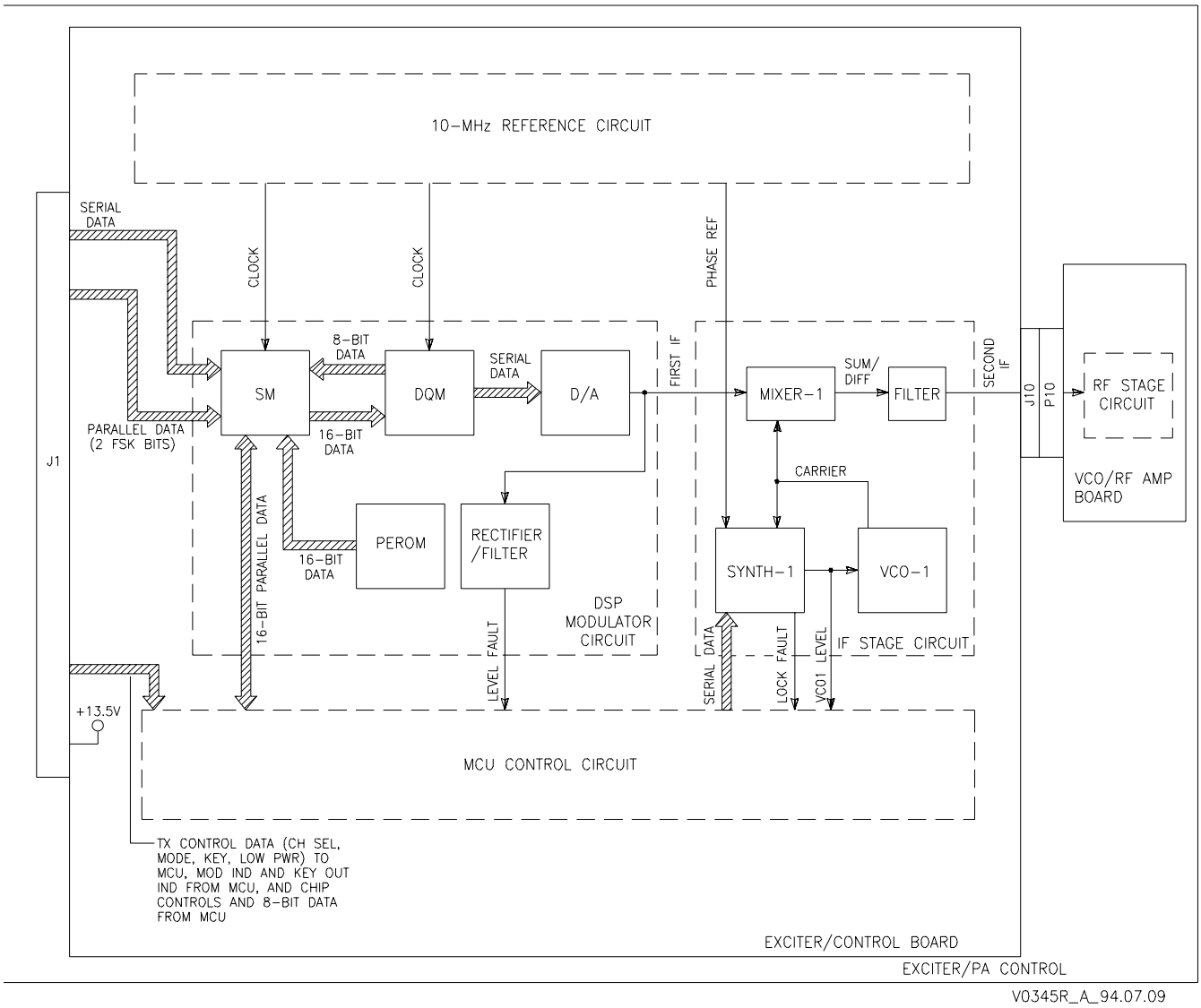

Figure 6-3 DSP Exciter-to-Controller Functional Diagram (Continued)

Copyright © 1998 Glenayre

v0081.hgll

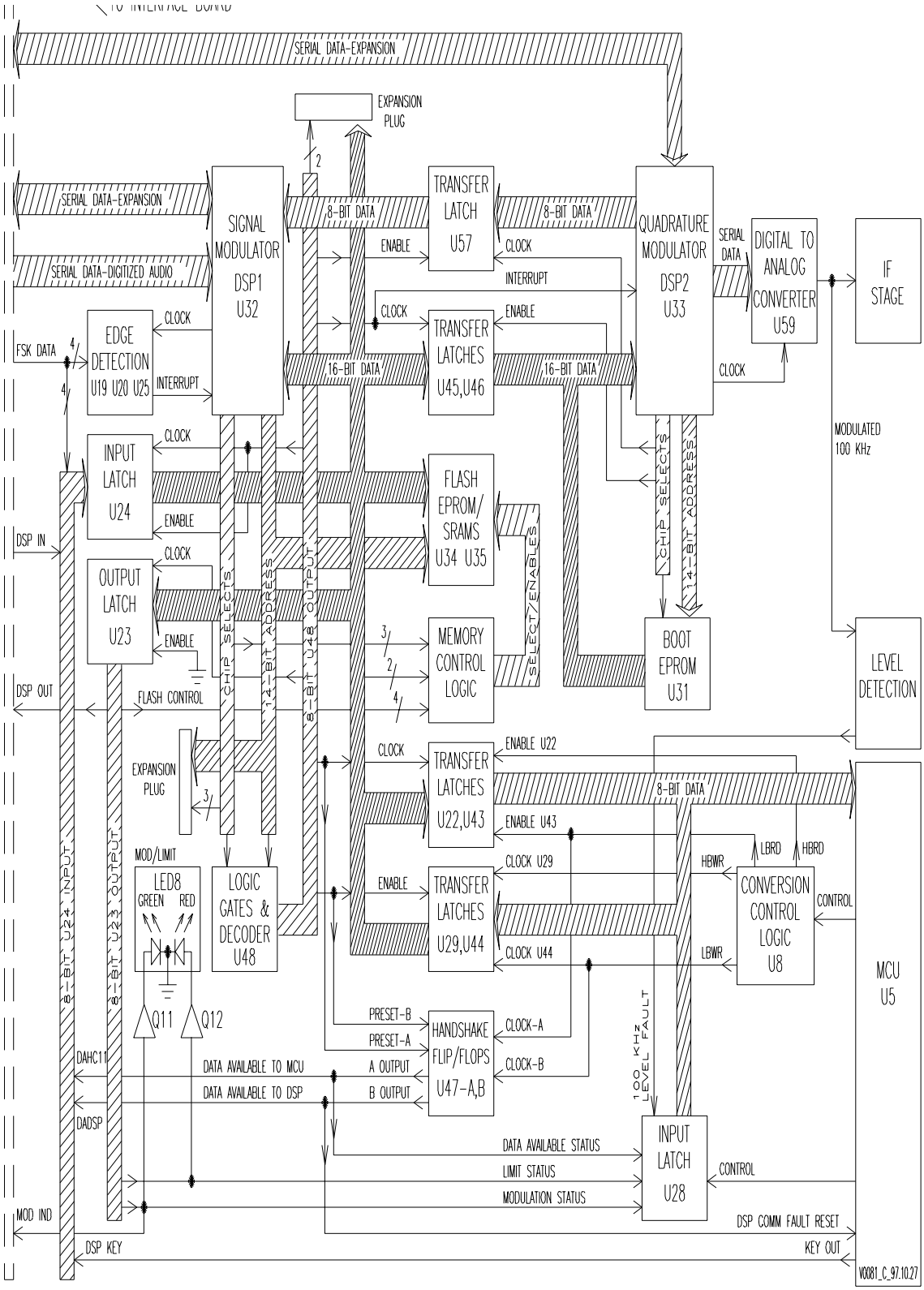

Figure 6-4 DSP Exciter Detailed Functional Diagram

Copyright © 1998 Glenayre

v0077.hglr

d1021_s6

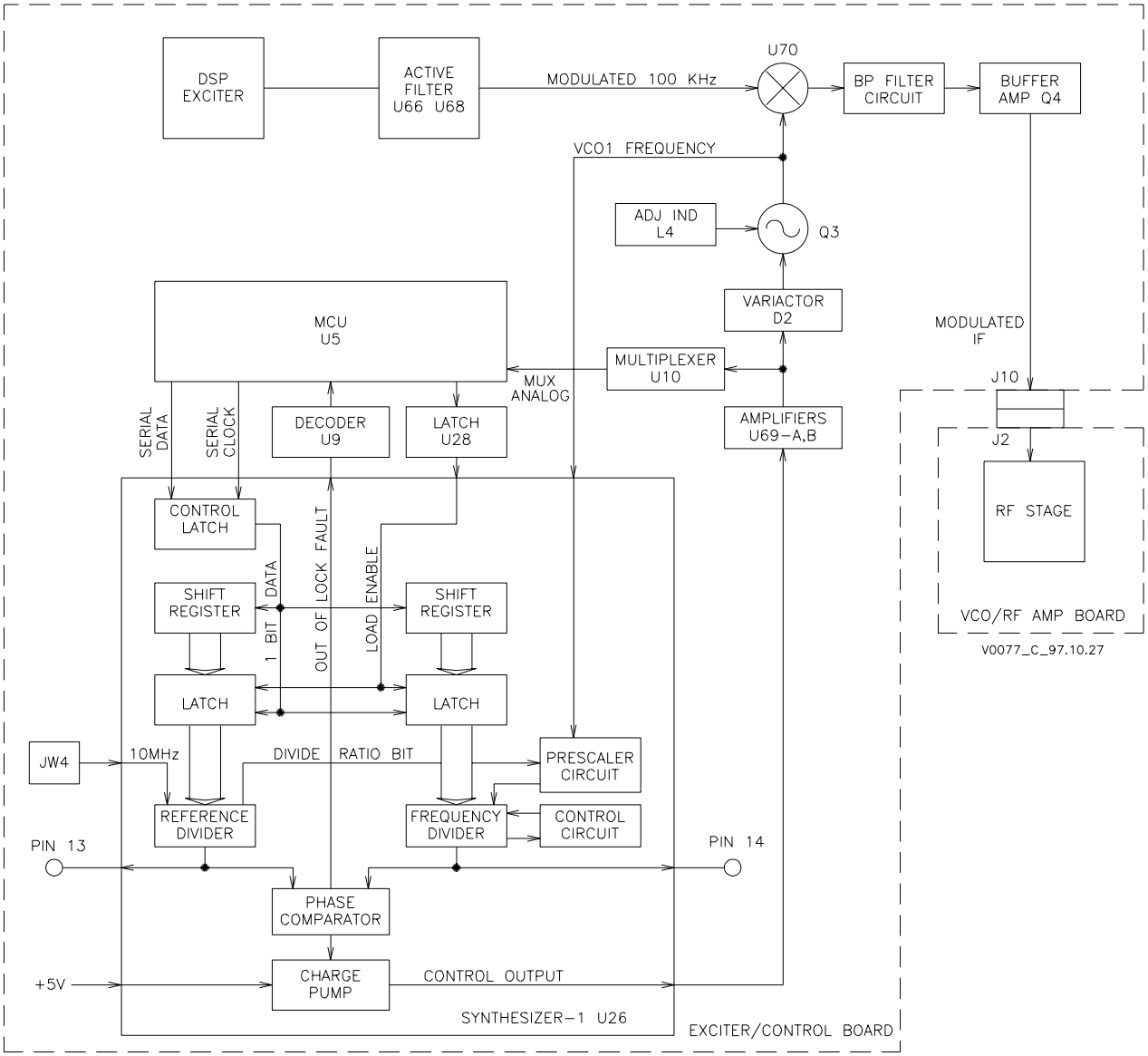

Figure 6-5 DSP Exciter IF-Stage Detailed Functional Diagram

Copyright © 1998 Glenayre

6.6 RF Assemblies

6.6.1 RF Stage Location

The RF stage circuits are located on two circuit boards, both housed within the exciter chassis. The exciter/control board is the main circuit board and the VCO/RF amplifier board is a selected option. The exciter/control board connects to the VCO/RF amplifier board through three connector pairs: J4/P4, J9/P9, and J10/P10. The VCO/RF amplifier board also contains BNC connector J3, which extends through the rear panel of the exciter. This board contains most of the RF stage components inside an RF shield. A hole in the shield and the front panel provide access to an RF stage adjustment, which is marked **VCO ADJ** on the front panel.

6.6.2 RF Assemblies

6.6.2.1 RF Stage Description

The RF stage is the portion of exciter circuitry between the IF stage and RF out and is the final major functional circuit. The RF stage determines transmitter RF output frequency and the highest and lowest possible RF output frequencies (RF band). The transmitter can be operated at several RF bands, depending on the RF stage circuitry installed in the exciter.

6.6.2.2 RF Stage Bands

The selected VCO/RF amplifier board determines the RF band of the transmitter.

6.6.2.3 RF Stage Signal Flow

Refer to *Figure 6-1*. Input to the RF stage is the second IF signal, supplied by the IF stage circuit through connector pair J10/P10. The second IF signal carries paging information on a modulated carrier at the exciter's second intermediate frequency. The RF stage converts the second IF signal into the exciter's RF output. This RF output carries the same paging information as the second IF signal, but on a modulated carrier of radio frequency. The RF output is normally applied to the PA through connector J3. To produce the RF output, the RF stage contains mixer-2, filters, and an amplifier. Supporting these circuits are VCO-2 and synth-2. The following text describes these five circuits and their signal flow.

6.6.2.3.1 Mixer-2

Mixer-2 is the second heterodyne mixer. Inputs to mixer-2 are a modulated IF and a carrier. The modulated IF is the second IF signal. The carrier is supplied by VCO-2. Output from mixer-2 consists of sum and difference frequencies of the inputs. The sum frequency is centered near the channel carrier, and the difference frequency about twice the second IF frequency below that. These two modulated RF carriers are applied to the filter circuit.

Copyright © 1998 Glenayre

d1021_s6

6.6.2.3.2 Filter

The filter is factory-selected and tuned, with a bandwidth determined by carrier frequency of the transmitter. The inputs to the filter consist of two modulated RF carriers and a key control.The two carriers are sum and difference frequencies, supplied by mixer-2. The key control is supplied by the MCU control circuit through J4/P4. The output from the filter, supplied when the key control is received, is only the sum frequency. This modulated RF, centered near the channel on-frequency, is supplied to the amplifier.

6.6.2.3.3 Amplifier

The amplifier provides amplification to the value listed in the specifications as exciter RF power out. The inputs to the amplifier consist of modulated RF and a key control. The modulated RF, mixer-2 sum output frequency, is supplied through the filter. Key control is supplied by the MCU control circuit through J4/P4. Output from the amplifier, supplied when the key control is received, is an amplified version of the modulated RF. This amplified output is the exciter RF output.

6.6.2.3.4 VCO-2

VCO-2 is the RF stage local oscillator. Inputs to VCO-2 are a dc control voltage and an adjustment. Dc control voltage is supplied by synthesizer-2. The adjustment, which varies the VCO2 control voltage level, is controlled through the front-panel VCO ADJ access. This control provides the means for VCO-2 to output a carrier frequency that would otherwise be beyond the range of the control voltage input. The carrier output, always second IF frequency below the channel carrier frequency, is applied to mixer-2.

6.6.2.3.5 Synthesizer-2

Synthesizer-2 controls VCO-2 carrier frequency by means of a phase-locked loop (PLL). PLL inputs to synthesizer-2 are a carrier and a phase reference. The reference is a 10-MHz carrier supplied by the 10-MHz reference circuit. The carrier is the VCO-2 output. The PLL output from synthesizer-2 is a dc control voltage. This voltage, set to cause VCO-2 to lock phases with the reference, is applied to the VCO-2 control input.

Synthesizer-2 also performs all communications between the RF stage circuit and the MCU control circuit. A control input to synthesizer-2 specifies VCO-2 carrier frequency. This data is received over a serial data link when the exciter is booting or changing channels. Status outputs from synthesizer-2 are a lock fault and a VCO2 level. The lock fault indicates loss of the carrier/reference phase lock. VCO2 level is the VCO-2 control voltage.

6.7 Voltage Regulator Circuit

Refer to *Figure 6-4* for pertinent information in the following discussion. The exciter receives 26-volt operating power through terminal board TB1on the rear of the chassis. The dc power indicator on the exciter front panel is connected to this input. This voltage is supplied to a 26-volt bus and is monitored by the MCU. An intermediate regulator reduces the 26 volts to 16.5 volts, which is supplied to the two final regulators. One regulator generates 13.5 volts, which is supplied to a 13.5-volt bus and monitored by the MCU. The other regulator generates 5 volts, which is supplied to a 5-volt bus and monitored by the MCU.

Copyright © 1998 Glenayre

Copyright © 1998 Glenayre

d1021_s7

7 MAINTENANCE

7.1 Location of Maintenance Procedures

The DSP exciter is central to performing transmitter maintenance. Most maintenance of electrical assemblies is done via the VT100 interface. Any maintenance procedures which require adjusting controls within the exciter chassis are listed in this section.

Replace the exciter if it has input power, as indicated by the front-panel DC POWER LED, but does not allow the user to make connection via the VT100 interface.

7.2 Test Equipment Required

See *Paragraph 4.2, Test Equipment and Tools Required*, for a list test equipment required to perform maintenance procedures.

7.3 VCO-2 Adjustment Procedure

Perform the VCO-2 adjustment procedure after installing new VCO/RF amplifier board or after setting new channel carrier frequency. If the transmitter is to operate at more than one frequency, perform the multichannel adjustment procedure. If the transmitter is to operate at only one frequency, perform the single-channel adjustment procedure. Refer to the DSP exciter VDT manual as necessary.

7.3.1 VCO-2 Multichannel Adjustment Procedure

1. Set up VT100 VDT and select local control (see VDT manual).
2. Select transmitter channel of lowest frequency if not already selected.
3. Use tuning tool supplied to adjust **VCO ADJ** control through exciter front panel. Adjust for a reading of 3.3 to 3.5 volts on VCO2 status display.
4. Return transmitter to service.

Procedure is complete.

7.3.2 VCO-2 Single-Channel Adjustment Procedure

This procedure does not apply to wideband option.

1. Set up VT100 VDT and select local control (see VDT manual).
2. Select transmitter channel of operating frequency if not already selected.
3. Use tuning tool supplied to adjust **VCO ADJ** control through exciter front panel. Adjust for reading of 5.0 Vdc on VCO2 status display.
4. Return transmitter to service.

Procedure is complete.

Copyright © 1998 Glenayre

7.4 Over-The-Link Downloading

Over-the-link (OTL) code downloading allows GL-C2000 transmitter controller (GL-C2000) software, alarm matrix setup, and exciter software to be downloaded over the GL-C2000 link channel.

To properly use OTL downloading, GL-C2000 units must be programmed for the correct control group, site ID, and unit ID, which are integral to GL-C2000 hardware and software. When information is downloaded over the link channel, the control group, site IDs and/or unit IDs that are to receive the code must be specified.

Caution

If the control group, site ID, and unit ID are not specified, all units in the system accept the download information. In a mixed system, this can result in some of the transmitters being off the air. An example of this would be a GL-T8600 exciter receiving a GL-T8500 exciter programming code. The GL-T8600 exciter would not operate with this software and could result in a site visit to correct the problem.

Programming of control groups and site IDs is done via the GL-C2000 front port with a local connection or through a modem from a remote location. The control groups should be setup as a group of transmitters having the same configuration. For example, all GL-T8500 transmitters could be in one control group and GL-T8600 transmitters be in another. This would allow one to download exciter software to all GL-T8500 transmitters at one time by selecting their control group. Any transmitter with a different control group would not accept the download information.

Site ID must be different for each site location, and is used when downloading information to a specific site location. If there are multiple units at the same site, the site ID and unit ID need to be specified to download to a specific unit. If the unit ID is not specified, all units at that site accept the download.

Unit ID is programmed with a rotary switch in the GL-C2000; it must be different for each GL-C2000 at a site location. To download one specific unit, both site and unit ID must be specified for that unit; the unit with that site ID and unit ID is the only one that accepts the download.

Note

For assistance on software downloading, call Glenayre Customer Support at 800-637-9181 or 217-223-3211.

7.5 On-The-Fly Channel/Mode Changing

Different paging formats may require different digital deviation and offsets of paging data on the same RF carrier frequency. In the past, the only way to meet the different deviation requirements on the same frequency was to program two different channels for the same

Copyright © 1998 Glenayre

d1021_s7

RF carrier frequency and then program those same two channels for a different digital deviation and offset. By changing channels, the deviation requirements of the paging formats were met. However, a channel change requires that the transmitter be unkeyed to allow time for PLL lock-up, which is a loss of air time.

The on-the-fly feature allows the following.

- Each channel can be programmed for four different digital modes (A, B, C, D).
- Each mode allows different digital deviation and offsets to be programmed.

During normal paging operation, the GL-C2000 controller sends information to the transmitter telling it what channel to operate on and which one of the four digital modes to use. The four different digital modes of operation are controlled by the data 2 and data 3 lines into the GL-C2000 interface board on the DSP exciter. If the paging data requires a different deviation, the GL-C2000 transmitter controller can change the mode without having to change the channel. This allows the DSP exciter to accommodate different paging format requirements without unkeying the transmitter to change channels.

7.5.1 Programming Example

To set up the exciter for the proper digital deviation and offset programming, make up a table similar to the one shown below. Next, access Digital Mode Setup menu and select View Channel Frequencies submenu.

Table 7-1 Deviation and Offset Programming

Channel								
	1/9	2/10	3/11	4/12	5/13	6/14	7/15	8/16
Mode/Dev. A	4500	4500	4500	4500	4500	4500	4500	4500
Mode/Offset A	0	+400	-400	+300	0	-300	0	0
Mode/Dev. B	4800	4800	4800	4800	4800	4800	4800	4800
Mode/Offset B	0	+200	-200	+400	0	+400	-400	0
Mode/Dev. C	2400	4200	4200	2400	2400	4200	2400	4200
Mode/Offset C	0	0	0	0	0	0	0	0
Mode/Dev. D	4200	2400	4200	2400	2400	2400	4200	2400
Mode/Offset D	0	0	+400	-400	0	0	0	0

Note

Initial release has setup similar to above table. Subsequent releases may have more programming variations.

Copyright © 1998 Glenayre

Note

When on-the-fly software is used with a QT-1000 interface board installed in the exciter, only the deviation and offset programming for mode D is available. References in the exciter menus pertaining to modes A, B, and C are blanked out.

7.5.1.1 DSP Exciter (2.1) / GL-C2000 (2.3)

The GL-C2000 detects a FLEX baud rate of 1600. When this condition is detected, the mode control lines to the DSP exciter change it to mode B. If the FLEX baud rate is not detected, the mode control lines are set for mode A. This requires that mode A deviation (and offset) be set for POCSAG (512, 1200 or 2400 baud), Golay, NEC or any other paging format other than FLEX requirements. Mode B deviation and offset must be set for FLEX. Mode C is used in later releases.

7.5.1.2 DSP Exciter (3.0) / GL-C2000 (3.0) / GL3000 (6.0)

This software/hardware combination makes all four modes accessible on the fly (OTF). Refer to the latest GL-C2000 manual for OTF mode configuration.

7.6 16-Channel Operation

With 16-channel capability, the on-the-fly digital mode programming is only programmable on 8 channels. When channels 1 through 8 are programmed for different modes, channels 9 through 16 follow the same mode programming respectively (i.e. channel 9 is the same as 1, channel 10 is the same as 2, etc.). Selecting additional channels (9 through 16) is achieved by the GL-C2000 controller pulling mode-1 line low to the GL-C2000 interface board.

These parameters: **`Fwd Pwr`** alarm, **`Low Pwr`** alarm, **`Deviation`**, **`Offset`**, and **`Filtering`** are mapped from channels 1 through 8 to channels 9 through 16, respectively. The center frequency is uniquely programmable for all 16 channels. The GL-C2000 only accesses channels 9 through 16 if it is configured for serial frequency-control mode.

Copyright © 1998 Glenayre

d1021_s7

7.7 On-The-Fly Interface

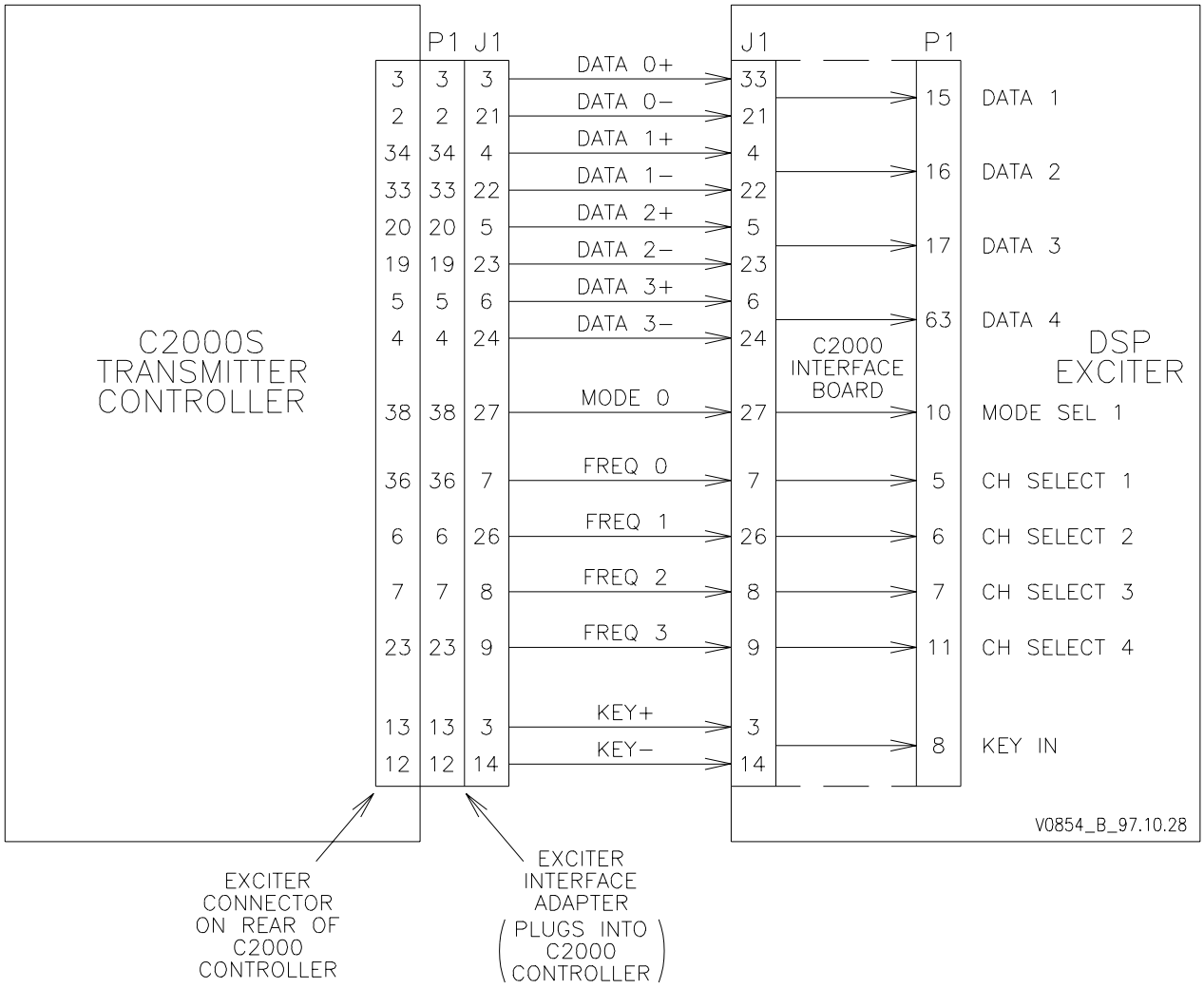

Figure 7-1 On-The-Fly GL-C2000 Control Lines to DSP Exciter

Copyright © 1998 Glenayre

Notes:

A GL-C2000 interface board must be installed in the DSP exciter whenever on-the-fly software is installed.

All J1 pin connections shown in *Figure 7-1* are at the input to the GL-C2000 interface board in the DSP exciter.

Data 0 at the input of the GL-C2000 interface board controls Data 1 at its output.
Data 1 at the input of the GL-C2000 interface board controls Data 2 at its output.
Data 2 at the input of the GL-C2000 interface board controls Data 3 at its output.
Data 3 at the input of the GL-C2000 interface board controls Data 4 at its output.

Mode 0 at the input of the GL-C2000 interface board controls Mode Sel 1 at its output.
Mode 1 at the input of the GL-C2000 interface board controls Ch Sel 4 at its output.

Freq 0 at the input of the GL-C2000 interface board controls Ch Select 1 at its output.
Freq 1 at the input of the GL-C2000 interface board controls Ch Select 2 at its output.
Freq 2 at the input of the GL-C2000 interface board controls Ch Select 3 at its output.

7.8 Checkout

The DSP exciter has two functions; it produces on-frequency RF and has a microprocessor to handle input from the PA and transmitter controller. Checkout involves verifying that RF is produced and unkeying occurs during a fault condition.

7.9 Troubleshooting

The recommended troubleshooting level for the exciter is at the unit level. That is, if the exciter fails to provide the transmitter system with a usable, modulated RF-drive signal and all the exciter’s power, control, and signal inputs are normal, replace the exciter with a spare. Determine that the spare is compatible in hardware (VCO and RF amplifier) and software/firmware. Some parameters must be programmed into a replacement exciter for system compatibility.

Copyright © 1998 Glenayre

d1021_s8

8 REMOVAL AND REINSTALLATION

Remove all input power from the transmitter cabinet before performing these procedures.

8.1 Exciter/PA Control Chassis

See *Figure 8-1* for a detailed drawing.

Note

Memory PROMs in the replacement exciter should be the same as in the original exciter unless the maintenance technician intends to modify exciter characteristics. Also, parameters such as channel frequencies, may be stored in nonvolatile RAM. Ensure that the replacement exciter is programmed correctly.

8.1.1 Removal Procedure

1. Support exciter while removing the four screws from the front panel that secure it to the cabinet. Save screws for installation procedure.
2. Remove exciter from cabinet far enough to access back panel.
3. Disconnect connector J3 from connector P3 that is pigtailed off terminal board TB1 (dc power input).
4. If a controller interface I/O panel is mounted on exciter back panel, remove I/O panel; leave all wires connected to I/O panel.
5. Tag all connectors attached to the exciter back panel.
6. Remove all connectors attached to the exciter back panel. Leave P3 connector/wiring assembly connected to terminal board TB1 for now.
7. Remove exciter and tag wires connected to terminal board TB1 on P3 connector/wiring assembly.
8. Disconnect tagged wires from terminal board TB1. Save P3 connector/wiring assembly for installation procedure.

Procedure is complete.

8.1.2 Reinstallation Procedure

Note

A wideband DSP exciter that is installed in a GL-T8500 or GL-T8600 transmitter must have one rack unit of space between it and the power amplifier chassis.

1. Before installing exciter, connect wires on P3 connector/wiring assembly (from removal procedure) to terminal board TB1 on exciter back panel.
2. Connect connectors on transmitter to exciter back panel.

Copyright © 1998 Glenayre

3. If controller requires interface I/O board, install external interface I/O board on exciter back panel (see *Paragraph 8.4*).
4. Connect connector J3 to connector P3 that is pigtailed off of terminal board TB1.
5. Locate connector P3 that is pigtailed off of terminal board TB1. Disconnect connector P3 from connector J3.
6. Slide exciter into cabinet and secure with four screws saved from removal procedure.

Procedure is complete. Perform setup, adjustment, or calibration procedures as required.

8.2 Exciter Cover

These procedures must be performed with the exciter removed from the transmitter cabinet. Refer to *Figure 8-2* throughout these procedures.

8.2.1 Removal Procedure

1. Remove two sem screws from sides of exciter cover. Save sem screws for installation procedure.
2. Raise front of cover and extract back of cover from channel in back panel extrusion.
3. Remove exciter cover.

Procedure is complete.

8.2.2 Reinstallation Procedure

1. Insert exciter cover into channel on exciter back panel extrusion.
2. Lower cover so that fingerstock is behind exciter front panel.
3. While pressing down slightly on exciter cover: install two sem screws saved from removal procedure through sides of exciter cover.

Procedure is complete.

Copyright © 1998 Glenayre

v0151.hgl

d1021_s8

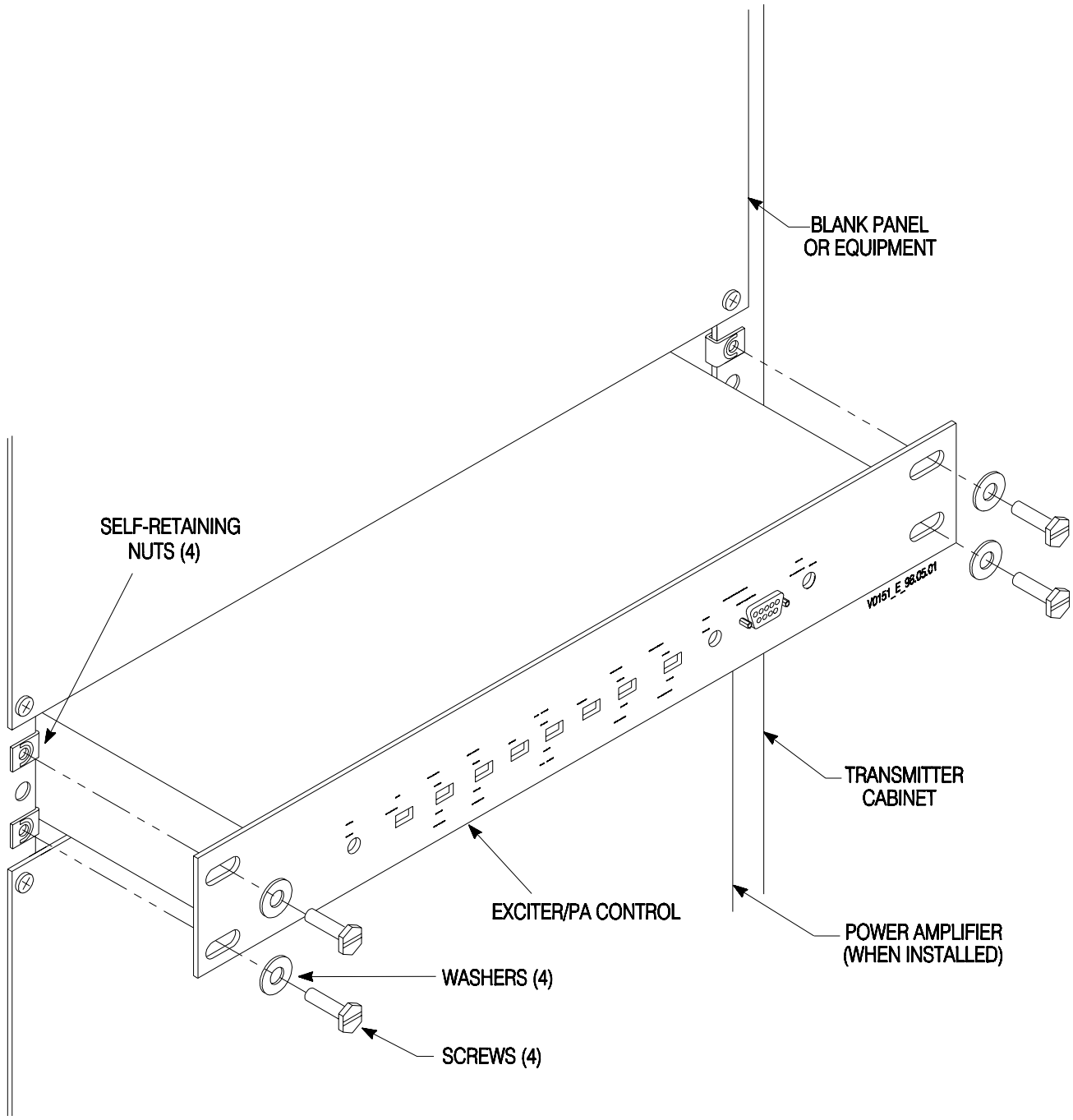

Figure 8-1 DSP Exciter Chassis Removal and Reinstallation

Copyright © 1998 Glenayre

v0171.hgl

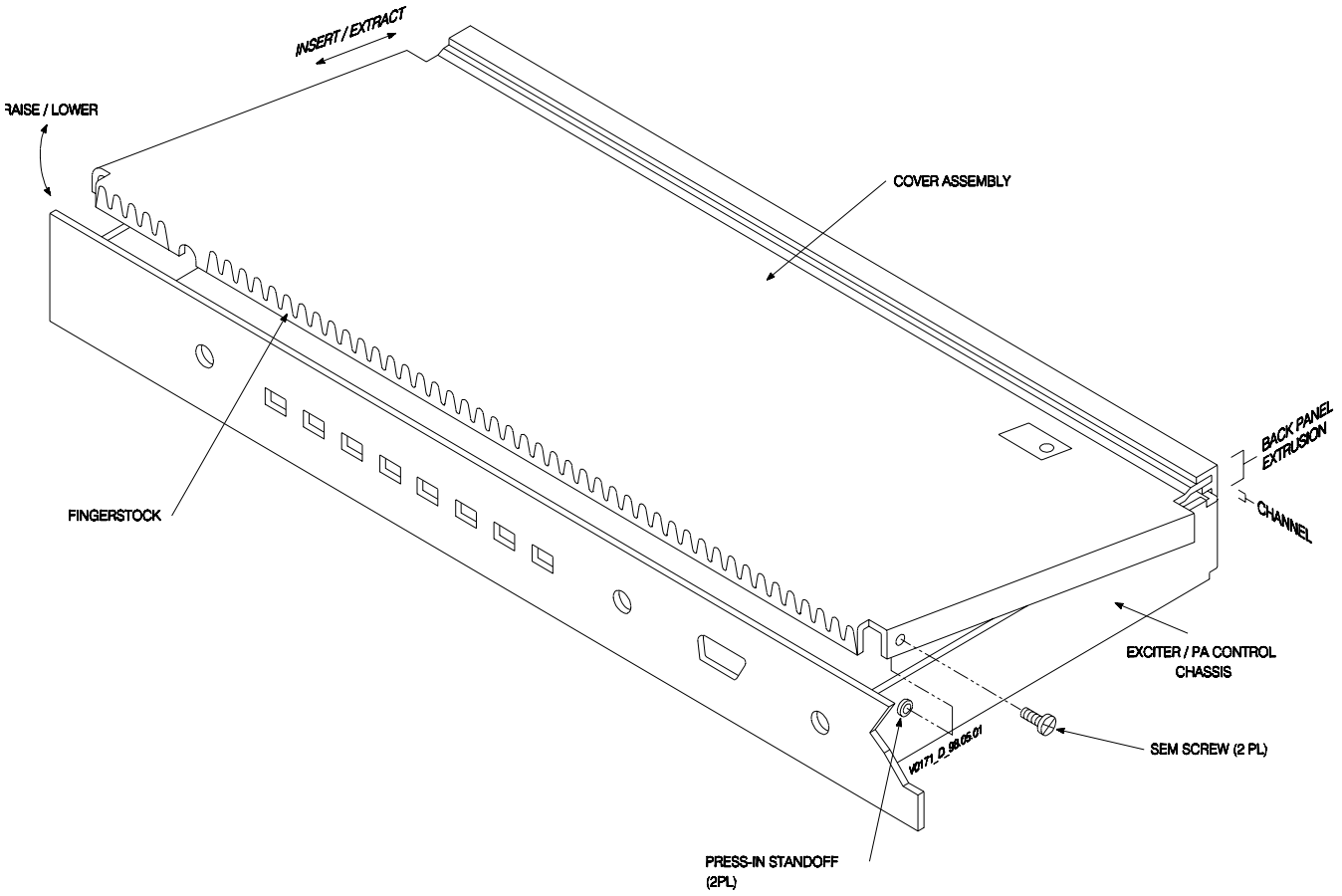

Figure 8-2 DSP Exciter Cover Removal and Reinstallation

Copyright © 1998 Glenayre

d1021_s8

8.3 Exciter/Control Board

These procedures must be performed with the exciter removed from the transmitter cabinet, and the exciter cover removed. Refer to *Figure 8-3* throughout these procedures.

8.3.1 Removal Procedure

Note

Save all hardware for reinstallation procedure.

1. Remove controller interface board (see *Paragraph 8.4*).
2. Remove VCO/RF amplifier board (see *Paragraph 8.5*).
3. Remove three kep nuts and three screws from regulators U1, U2, and U58.
4. Remove shoulder washer from regulator U58.
5. Remove two jam nuts and two lock washers from connectors J7 and J8.
6. Remove two jack socket screws attached to connector J6 through back panel.
7. Remove four sem screws from back panel and remove back panel from exciter chassis. Some exciters use three sem screws and one standoff.
8. Remove insulator between back panel and regulator U58.
9. Remove two jack socket screws attached to connector J3 through front panel.
10. Remove two studded standoffs through exciter/control board.
11. Remove nine sem screws that attach exciter/control board to exciter chassis, and remove exciter/control board.

Procedure is complete.

8.3.2 Reinstallation Procedure

Note

Use hardware saved from installation procedure.

Caution

Be careful to not overtighten hardware.

1. Position exciter/control board onto exciter chassis and secure with nine sem screws.
2. Install two studded standoffs through exciter/control board.
3. Apply Vibra Tite or similar nonpermanent self-locking liquid adhesive to threads of the two jack socket screws to be used for connector J3. Apply only to top 1/4 inch of thread on each jack socket screw.
4. Install two jack-socket screws into connector J3 through front panel.

Copyright © 1998 Glenayre

5. Apply thermal compound as follows: between regulator U1 and back panel, between regulator U2 and back panel, between regulator U58 and insulator, and between insulator and back panel.
6. Install insulator between regulator U58 and back panel.
7. Position back panel on exciter chassis and secure with four sem screws. Some exciters use three sem screws and one standoff in the bottom right corner.
8. Apply Vibra Tite or similar nonpermanent self-locking liquid adhesive to threads of the two jack socket screws to be used for connector J6. Apply only to top 1/4 inch of thread on each jack-socket screw.
9. Install two jack socket screws into connector J6 through back panel.
10. Install two lock washers and two jam nuts over connectors J7 and J8.
11. Install shoulder washer into regulator U58.
12. Install three kep nuts and three screws through regulators U1, U2, and U58.
13. Install VCO/RF amplifier board (see *Paragraph 8.5*).
14. Install controller interface I/O board (see *Paragraph 8.4*).

Procedure is complete. After exciter is installed in transmitter cabinet, perform setup procedure if necessary (refer to the system and menu manuals).

Copyright © 1998 Glenayre

v0170.hgl

d1021_s8

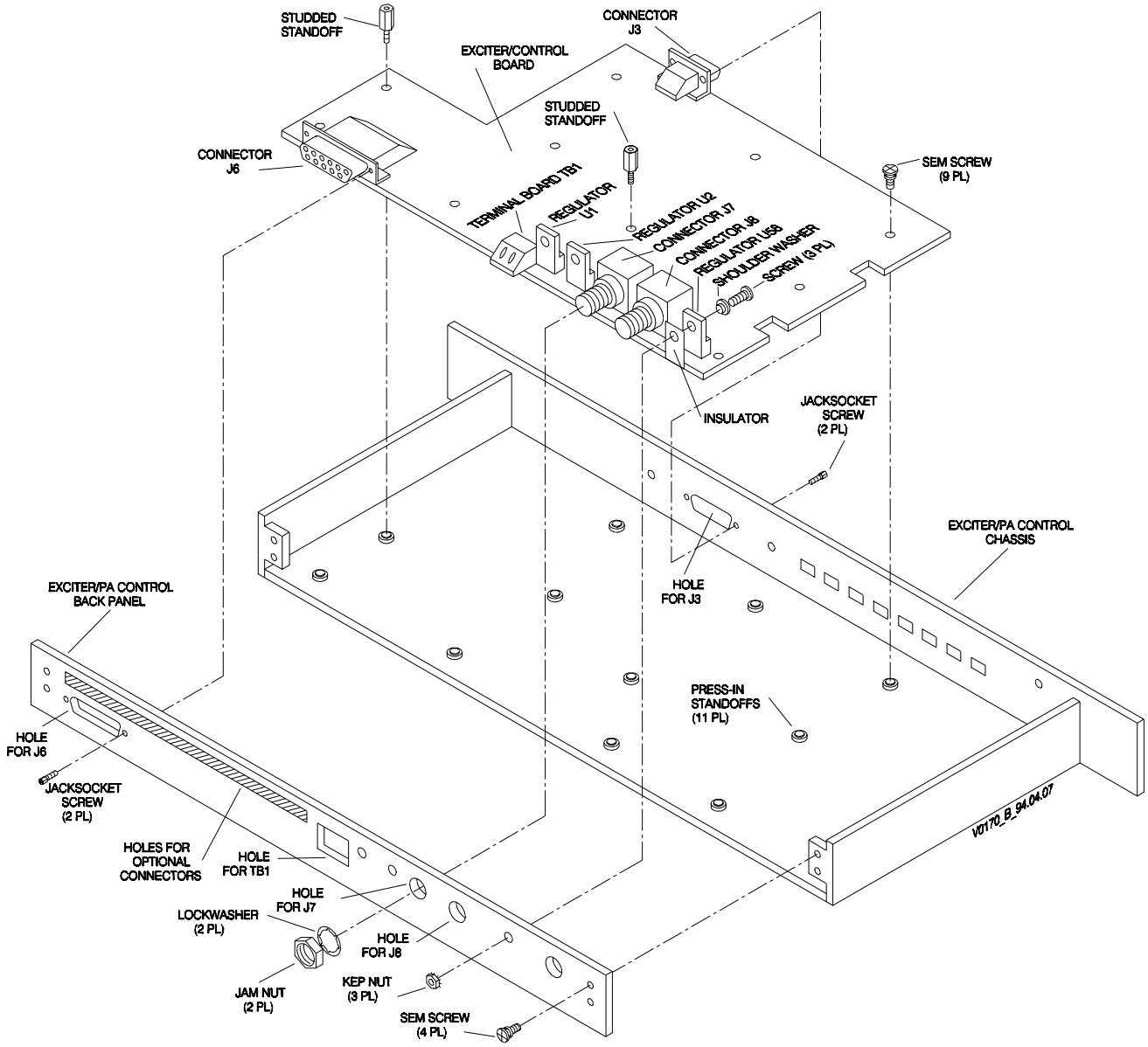

Figure 8-3 DSP Exciter Control Board Removal and Reinstallation

Copyright © 1998 Glenayre

8.4 Interface I/O Board

These procedures must be performed with the exciter removed from the transmitter cabinet (see *Paragraph 8.1*), and the exciter cover removed (see *Paragraph 8.2*). Refer to *Figure 8-4* throughout the following procedures.

8.4.1 Removal Procedure

1. Remove jack socket screws (2 or 6) securing connector J4 (J1 and J2 not always used) to the rear panel of the exciter. Save jack socket screws for installation procedure.
2. Remove two sem screws securing interface board to standoffs. Save sem screws for installation procedure.
3. Grasp interface board at the center of connector P1. Pull up on board with a firm vertical motion to disengage connector P1 from connector J1 on the exciter/control board.
4. Remove interface board.

Procedure is complete.

8.4.2 Reinstallation Procedure

1. Position interface board into place by inserting connector J4 (and J1 and J2 if used) through openings in exciter rear panel.
2. Carefully align connector P1 on interface board with connector J1 on exciter/control board and engage.
3. Secure interface board to standoffs with two sem screws saved from removal procedure.
4. Apply Vibra Tite or similar nonpermanent self-locking liquid adhesive to threads of the six jack socket screws saved from removal procedure. Apply only to top 1/4 inch of thread on each jack socket screw.
5. Screw the six jack socket screws through holes on exciter rear panel at either sides of connectors J1, J4, and J2.

Procedure is complete. After exciter is installed into transmitter cabinet, perform audio input adjustment procedure (see DSP VDT Menus manual, PN 9110.00259).

Copyright © 1998 Glenayre

d1021_s8

8.5 VCO/RF Amplifier Board

These procedures must be performed with the exciter removed from the transmitter cabinet (see *Paragraph 8.1*), and the exciter cover removed (see *Paragraph 8.2*). Refer to *Figure 8-5* throughout these procedures.

8.5.1 Removal Procedure

1. Remove jam nut and lock washer from connector J3 on rear of exciter. Save jam nut and lock washer for installation procedure.
2. Remove five sem screws securing VCO/RF amplifier board to standoffs on exciter. Save sem screws for installation procedure.
3. Grasp VCO/RF amplifier board near connector P4. Pull up on board with a short vertical motion to disengage connectors P4/P9/P10 from connectors J4/J9/J10 on exciter/control board.
4. Remove VCO/RF amplifier board.

Procedure is complete.

8.5.2 Reinstallation Procedure

1. Before installing VCO/RF amplifier board, verify that RF band includes desired transmitter operating frequencies.
2. Position VCO/RF amplifier board into place by inserting connector J3 through hole in rear of exciter.
3. Carefully align connectors P4/P9/P10 on VCO/RF amplifier board with connectors J4/J9/J10 on exciter/control board and engage.
4. Secure VCO/RF amplifier board to standoffs on exciter using five sem screws saved from removal procedure.
5. Install lockwasher and jam nut to connector J3 on rear of exciter using lockwasher and jam nut saved from removal procedure.

Procedure is complete. After exciter is installed into transmitter cabinet, perform VCO2 adjustment procedure. See *Paragraph 7.3* for details.

Copyright © 1998 Glenayre

v0341.hgl

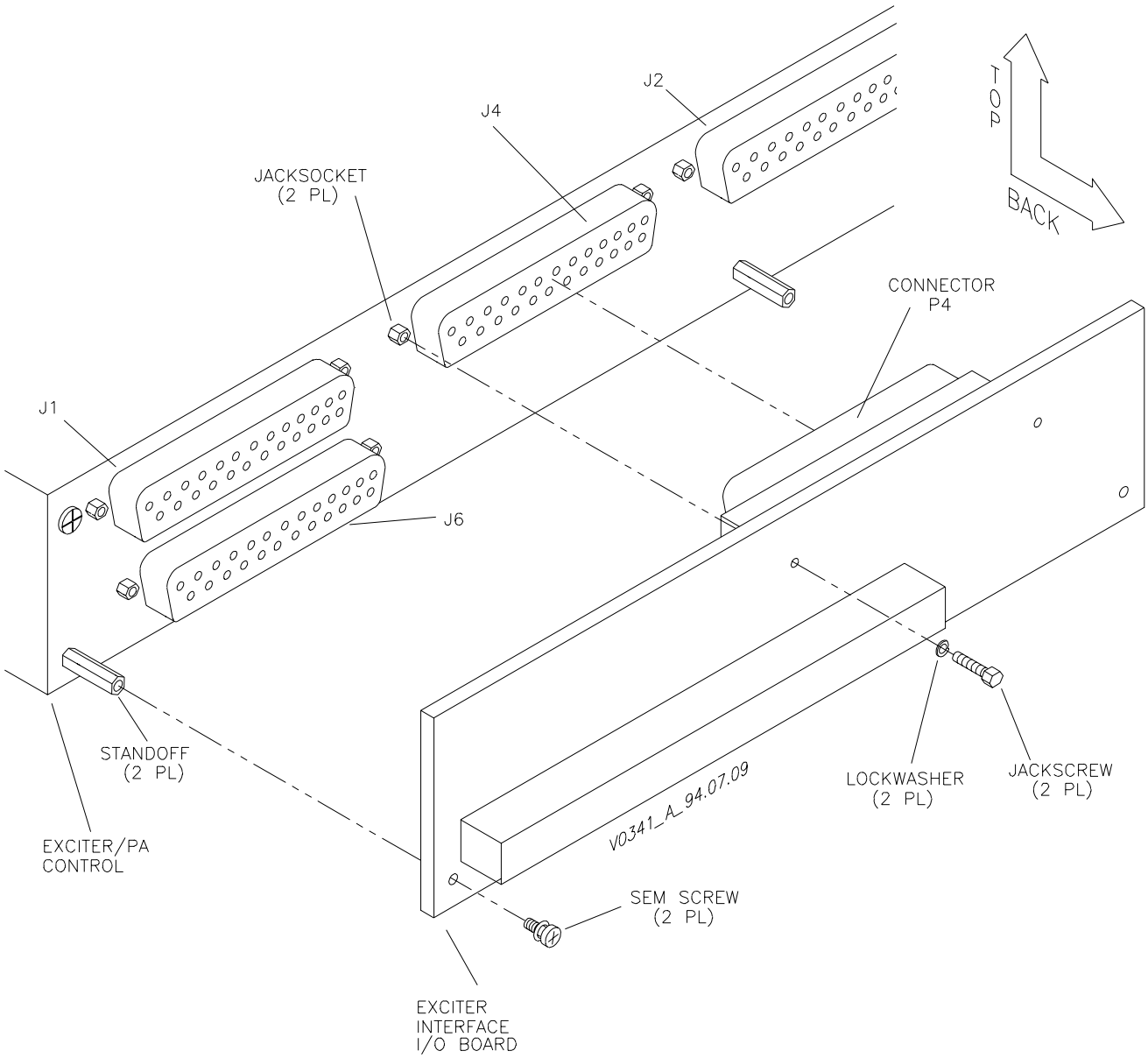

Figure 8-4 DSP Exciter External Interface I/O Board Removal and Reinstallation

Copyright © 1998 Glenayre

v0342.hgl

d1021_s8

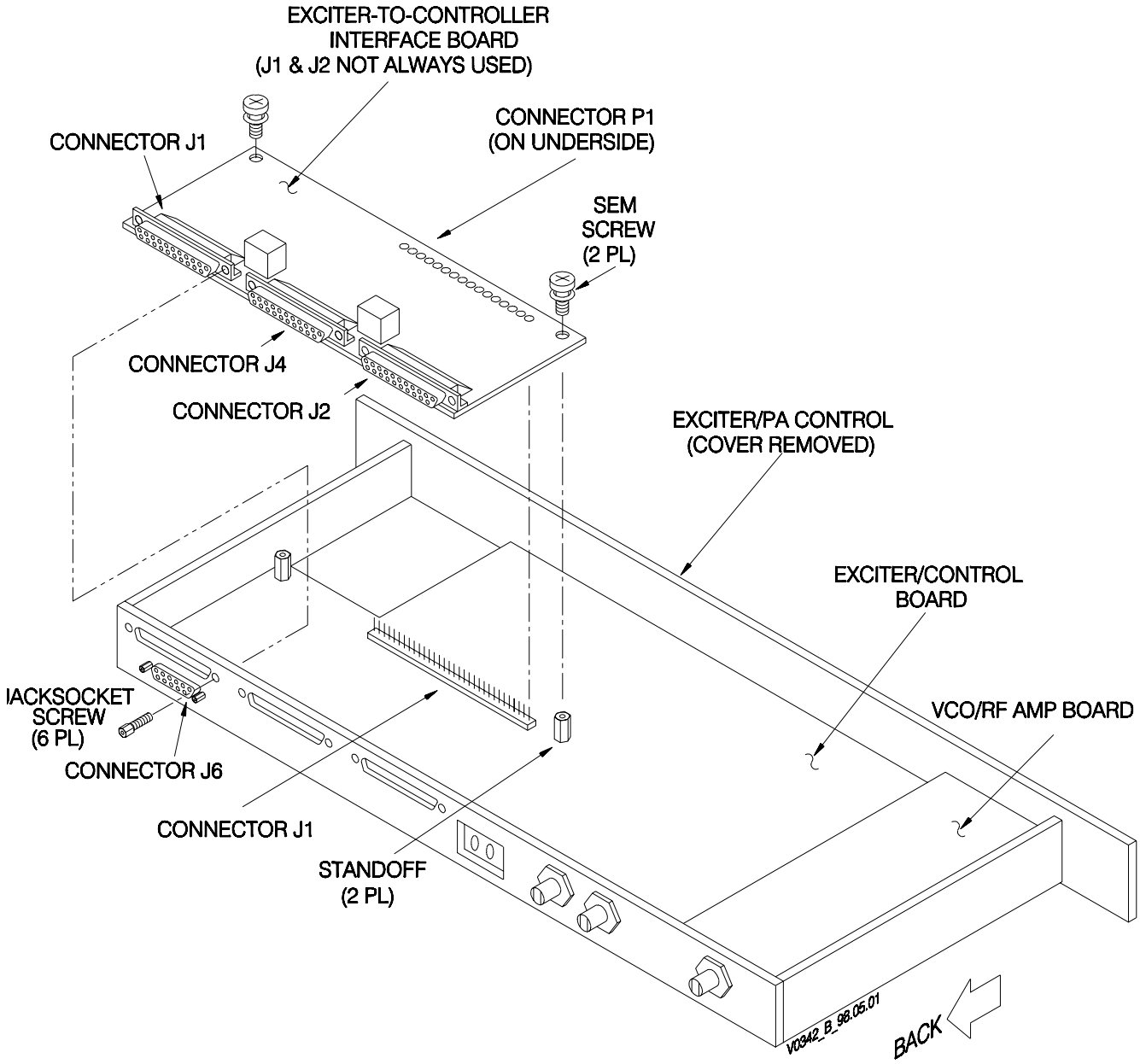

Figure 8-5 DSP Exciter Interface Board Removal and Reinstallation

Copyright © 1998 Glenayre

Copyright © 1998 Glenayre

d1021_s9

9 OPTIONS

9.1 Exciter/PA Control w/ QT-1000 Interface

The controller interface is the portion of exciter circuitry that connects the transmitter controller to the exciter. The controller interface dictates what kind of transmitter controller may operate the transmitter. The transmitter can be operated through one of several controllers depending on the interface circuitry installed with the exciter. Two boards comprise this interface: the internal QT-1000 interface board and the external interface I/O board.

Control commands from the transmitter controller are connected through the interface circuit. This circuit supplies remote control to the microcontroller unit (MCU) control circuit. The VT100 VDT supplies local control. The MCU control circuit generates all control signals for the other circuits, and monitors their status. The MCU control circuit reports status back to the VT100 VDT and the interface circuit, which supplies the status to the transmitter controller.

9.1.1 Reference Source

A 10-MHz reference signal is provided by the controller via J8 on the exciter/control board.

9.1.2 Controller Interface Connector Functions (QT-1000)

Refer to *Table 9-1*, and *Table 9-2* for a pin-by-pin description of signal functions. The controller interfaces with the transmitter through connectors J1, J2, and J5 and terminal board TB2 at the exciter back panel. J5 on the external I/O board connects to a standard RL-xx3 receiver, if installed. If a standard receiver is not installed, TB2 on the external I/O board connects to any generic receiver. TB2 also makes connections to optional configurable QT-1000 alarm inputs and switching outputs. J1 on the internal interface board connects directly to TXC connector J1, and interfaces all signals except alarms. Alarm signals, consisting of transmitter alarm, fault, and status signals, are supplied directly to the QT-1000 controller connector J2 on the internal interface board.

9.1.3 Interface Conversion Functions (QT-1000)

Some signals exchanged between the controller and exciter originate with a format, voltage, or requirement incompatible with their destination. The QT-1000 interface performs signal conversions necessary to provide compatibility between the controller and exciter. The following describes any signal conversions made by the controller interface.

9.1.3.1 Analog-Mode A/D Conversion

The exciter DSP modulator circuit reads synchronized serial data for its analog mode input signal, but the QT-1000 controller provides an analog signal. The controller interface converts the analog to appropriate data form for the DSP. The analog (FLAT AUDIO+,-) terminates across a balanced input circuit that also provides a level adjustment. The adjustment, when properly set by the AUDIO INPUT ADJUST pot through the exciter cover, provides analog to an A/D converter at the optimum 0-dBm level. The A/D converts analog

Copyright © 1998 Glenayre

into serial data, which is applied to the DSP through a synchronous data link. A synchronous data link is characterized by exchange of pulse streams for timing purposes. The A/D converter is clocked by a pulse generator circuit driven by the 10-MHz reference circuit.

9.1.3.2 FSK-Data-Bit Strapping

The exciter DSP modulator circuit reads two bits (DATA 1,2) from the QT-1000 for its digital FSK mode input signal. This allows transmitter operation in the four-level mode. Data bits 3 and 4 are unavailable with the QT-1000 interface (internally grounded).

9.1.3.3 Channel-Select-Bit Strapping

The exciter MCU reads two bits (CH SELECT 1,2) from the QT-1000 to determine the remotely-selected channel. As a result, the QT-1000 can command only four channels. The QT-1000 interface keeps bit 3 open (high). Refer to *Table 9-6* for transmitter operating channel resulting from the channel select inputs.

9.1.3.4 Mode-Select-Bit Strapping

The exciter MCU reads one bit (MODE SELECT 1) from the QT-1000 to determine the remotely-selected mode. Refer to *Table 9-7* for the transmitter operating mode resulting from the mode select input.

9.1.3.5 Power Sample D/A Conversion

The QT-1000 reads two 0-to-2.5-volt voltages for its forward and reflected power sample inputs, but these power values are stored as data in the exciter MCU control circuit. The QT-1000 interface converts data to voltages of the appropriate range for the QT-1000. Data from the MCU representing the forward and reflected powers is written into a dual D/A converter. The D/A converts data into two proportional dc voltages ranging from 0 volt to 2.5 volts (FWD PWR SAMPLE, REF PWR SAMPLE), which are applied to the QT-1000. Control logic gates ensure that data is written to the proper half of the D/A converter.

Copyright © 1998 Glenayre

d1021_s9

Table 9-1 Interface Board Connector J4 (QT-1000)

J4-x	Signal/Description	J4-x	Signal/Description
1	FWD PWR SAMPLE, analog output to tx controller	14	AUDIO INPUT +, input from receiver or tx controller
2	AUDIO INPUT -, common	15	REF PWR SAMPLE, analog output to tx controller
3	TX GND	16	TONE DECODER OUTPUT, logic output to tx controller
4	KEY IN, input from tx controller	17	DATA 1, digital data input from tx controller
5	DATA 2, digital data input from tx controller	18	DATA 3, not connected
6	CH SELECT 3, not connected	19	MODE SELECT 1, digital command input from tx controller
7	CH SELECT 4, not connected	20	LOW POWER MODE, logic input from PA
8	FAULT ALARM, digital output to tx controller	21	VSWR ALARM, logic output to tx controller
9	DATA4/CLK, not connected	22	CH SELECT 1, logic input from tx controller
10	CH SELECT 2, logic input from tx controller	23	MOD IND, logic output to tx controller
11	LOW POWER ALARM, output to tx controller	24	TEMP ALARM, logic output to tx controller
12	SHUTDOWN ALARM, output to tx controller	25	RF INPUT ALARM, logic output to tx controller
13	Not used	--	--

Copyright © 1998 Glenayre

Table 9-2 Receiver Connector J5 Pin Functions
QT-1000 with External I/O Board

J5-X	Function	J5-X	Function
1	No connection	9	No connection
2	Standard receiver input for audio interface, 2 Vp-p, nominal	10	No connection
3	No connection	11	Return for standard receiver audio
4	No connection	12	Return for standard receiver RSSI input for interface, 0.5-6.0 Vdc
5	No connection	13	No connection
6	Standard receiver ground for interface	14	Standard receiver-fault alarm input for interface, LO=OK
7	No connection	15	No connection
8	Standard receiver squelch output for interface, HI=unsquelched		

Table 9-3 Remote Select Input vs. Channel (QT-1000)

Ch Sel 1 J1-5	Ch Sel 2 J1-24	Ch Sel 3 J1-nc	Selected Channel
Open (HI)	Open (HI)	Open (HI)	1
Ground (LO)	Open (HI)	Open (HI)	2
Open (HI)	Ground (LO)	Open (HI)3	3
Ground (LO)	Ground (LO)	Open (HI)	4

Table 9-4 Remote Select Input vs. Mode (QT-1000)

Mode Sel 1: J1-25	Selected Mode
Command ground (LO)	Analog
Command open (HI)	4 level

Note

Not all transmitters can operate in all of the modes.

Copyright © 1998 Glenayre

d1021_s9

9.2 Exciter/PA Control with Standard Interface

The following major paragraphs describe the operation of the major items within the standard interface. Detailed figures are referenced as required.

The controller interface is the portion of exciter circuitry that connects the transmitter controller to the exciter. The controller interface dictates which transmitter controller may operate the transmitter. The transmitter can be operated through one of several controllers depending on the interface circuitry installed at the exciter. Two boards form this interface: the internal standard interface board and external exciter standard interface I/O board.

Control commands from the transmitter controller are connected through the interface circuit. This circuit supplies remote control to the microcontroller unit (MCU) control circuit. The VT100 VDT supplies local control. The MCU control circuit generates all control signals for the other circuits, and monitors their status. The MCU control circuit reports status back to the VT100 VDT and the interface circuit, which supplies the status to the transmitter controller.

9.2.1 Reference Source

A 10-MHz reference signal is provided by the controller via J8 on the exciter/control board.

9.2.2 Controller Interface Connector Functions (Standard)

Refer to *Table 9-1* for a pin-by-pin description of signal functions. The controller interfaces with the transmitter through connector J4 and terminal board TB2 at the exciter back panel. TB2 also makes connections to optional configurable alarm inputs and switching outputs.

9.2.3 Interface Conversion Functions (Standard)

Many of the signals exchanged between the controller and exciter originate with a format, voltage, or requirement incompatible with their destination. The standard interface performs signal conversions necessary to provide compatibility between the controller and exciter. The following describes signal conversions made by the controller interface.

9.2.3.1 Analog-Mode A/D Conversion

The exciter DSP modulator circuit reads synchronized serial data for its analog mode input signal, but the transmitter controller provides an analog signal. The controller interface converts the analog to the appropriate data form for the DSP. Analog (FLAT AUDIO +,-) terminates across a balanced input circuit that also provides a level adjustment. The adjustment, when properly set by the AUDIO INPUT ADJUST pot through the exciter cover, provides analog to an A/D converter at the optimum 0-dBm level. The A/D converts analog into serial data, which is applied to the DSP through a synchronous data link. A synchronous data link is characterized by exchange of pulse streams for timing purposes. The A/D converter is clocked by a pulse generator circuit driven by the exciter’s 10-MHz reference circuit.

Copyright © 1998 Glenayre

9.2.3.2 FSK-Data-Bit Strapping

The exciter DSP modulator reads two bits (DATA 1,2) from the controller for its digital FSK mode input signal. This allows transmitter operation in the two- or four-level mode. Data bits 3 and 4 are used for on-the-fly (OTF) operation.

9.2.3.3 Channel-Select-Bit Strapping

The exciter MCU reads four bits (CH SELECT 1,2,3,4) from the controller to determine the remotely-selected channel. Refer to *Table 9-6* for the transmitter operating channel resulting from the channel select inputs.

9.2.3.4 Mode-Select-Bit Strapping

The exciter MCU reads one bit (MODE SELECT 1) from the controller to determine the remotely-selected mode. Refer to *Table 9-7* for the transmitter operating mode resulting from the mode select input.

9.2.3.5 Power Sample D/A Conversion

The transmitter controller reads two 0-to-2.5-volt voltages for its forward and reflected power sample inputs, but these power values are stored as data within the exciter's MCU control circuit. The controller interface converts the data to voltages of the appropriate range for the transmitter controller. Data from the MCU representing the forward and reflected powers is written into a dual D/A converter. The D/A converts the data into two proportional dc voltages ranging from 0 volt to 2.5 volts (FWD PWR SAMPLE, REF PWR SAMPLE), which are applied to the transmitter controller. Control logic gates ensure that data is written to the proper half of the D/A converter.

9.3 Exciter/PA Control with I20 Interface

The following paragraphs describe the operation of the major items within the I20 interface. Detailed figures are referenced, as required. The controller interface is the portion of exciter circuitry that connects the transmitter controller to the exciter. The controller interface dictates what kind of transmitter controller may operate the transmitter. The transmitter can be operated through one of several controllers depending on the interface circuitry installed (I20) at the exciter. Two boards form this interface, the internal I20 interface board and the external I20 interface I/O board.

Control commands from the transmitter controller are connected through the interface circuit. This circuit supplies remote control to the microcontroller unit (MCU) control circuit. The VT100 VDT supplies local control. The MCU control circuit generates all control signals for the other circuits, and monitors their status. The MCU control circuit reports status back to the VT100 VDT and the interface circuit, which supplies the status to the transmitter controller.

9.3.1 Reference Source

A 10-MHz reference signal is provided by the controller via J8 on the exciter/control board.

Copyright © 1998 Glenayre

d1021_s9

9.3.2 Controller Interface Connector Functions

Refer to *Table 9-8* and *Table 9-9* for a pin-by-pin description of signal functions. The exciter interfaces with the transmitter through connector J2 and the controller through J1.

Table 9-5 Interface Board Connector J4 (Standard)

J4-x	Signal/Description	J4-x	Signal/Description
1	FWD PWR SAMPLE, analog output to tx controller	14	AUDIO INPUT -, input from receiver or tx controller
2	AUDIO INPUT +, common	15	REF PWR SAMPLE, analog output to tx controller
3	TX GND	16	TONE DECODER OUTPUT, logic output to tx controller
4	KEY IN, input from tx controller	17	DATA 1, digital data input from tx controller
5	DATA 2, digital data input from tx controller	18	DATA 3, digital command input from tx controller
6	CH SELECT 3, digital command input from tx controller	19	MODE SELECT 1, digital command input from tx controller
7	CH SELECT 4, digital command input from tx controller	20	LOW POWER MODE, digital command input from PA
8	FAULT ALARM, digital output to tx controller	21	VSWR ALARM, logic output to tx controller
9	DATA4/CLK, digital command input from tx controller	22	CH SELECT 1, digital command input from tx controller
10	CH SELECT 2, digital command input from tx controller	23	MOD IND, logic output to tx controller
11	LOW POWER ALARM, output to tx controller	24	TEMP ALARM, logic output to tx controller
12	SHUTDOWN ALARM, output to tx controller	25	RF INPUT ALARM, logic output to tx controller
13	Not used	--	--

Table 9-6 Remote Select Input vs. Channel (standard)

Ch Sel 1 J4-22	Ch Sel 2 J4-10	Ch Sel 3 J4-6	Ch Sel 4 J4-7	Selected Channel
Open (HI)	Open (HI)	Open (HI)	Open (HI)	1
Ground (LO)	Open (HI)	Open (HI)	Open (HI)	2
Open (HI)	Ground (LO)	Open (HI)	Open (HI)	3
Ground (LO)	Ground (LO)	Open (HI)	Open (HI)	4
Open (HI)	Open (HI)	Ground (LO)	Open (HI)	5
Ground (LO)	Open (HI)	Ground (LO)	Open (HI)	6
Open (HI)	Ground (LO)	Ground (LO)	Open (HI)	7

Copyright © 1998 Glenayre

Table 9-6 Remote Select Input vs. Channel (standard) (continued)

Ch Sel 1 J4-22	Ch Sel 2 J4-10	Ch Sel 3 J4-6	Ch Sel 4 J4-7	Selected Channel
Ground (LO)	Ground (LO)	Ground (LO)	Open (HI)	8
Open (HI)	Open (HI)	Open (HI)	Ground (LO)	9
Ground (LO)	Open (HI)	Open (HI)	Ground (LO)	10
Open (HI)	Ground (LO)	Open (HI)	Ground (LO)	11
Ground (LO)	Ground (LO)	Open (HI)	Ground (LO)	12
Open (HI)	Open (HI)	Ground (LO)	Ground (LO)	13
Ground (LO)	Open (HI)	Ground (LO)	Ground (LO)	14
Open (HI)	Ground (LO)	Ground (LO)	Ground (LO)	15
Ground (LO)	Ground (LO)	Ground (LO)	Ground (LO)	16

Table 9-7 Remote Select Input vs. Mode (standard)

Mode Sel 1: J4-19	Selected Mode
Command ground (LO)	Analog
Command open (HI)	4-level

Note

Not all of the transmitters can accommodate all of the modes.

9.3.3 I20 Interface Conversion Functions

Many signals exchanged between the controller and the exciter originate with a format, voltage, or requirement incompatible with their destination. The I20 interface performs signal conversions necessary to provide compatibility between the controller and exciter. The following text describes any signal conversions made by the controller interface.

9.3.3.1 FSK-Data-Bit Strapping

The exciter DSP modulator reads two bits (DATA 1,2) from the controller for its digital FSK mode input signal. This allows transmitter operation in the two- or four-level mode.

9.3.3.2 Channel-Select-Bit Strapping

The exciter MCU reads four bits (CH SEL 1, 2, 3, 4) to determine the remotely-selected channel. Refer to *Table 9-6* for the transmitter operating channel resulting from the channel select inputs.

Copyright © 1998 Glenayre

d1021_s9

9.3.3.3 Mode-Select-Bit Strapping

The exciter MCU control circuit reads one bit (MODE SEL 1) from the controller to determine the remotely-selected mode. Refer to *Table 9-7* for the transmitter operating mode resulting from the model-select input.

Table 9-8 Interface Board Connector J2

J2-x	Signal/Description	J2-x	Signal/Description
1	Not used	8	GND
2	TxD+	9	TxD-
3	KEY+	10	KEY-
4	RxD+	11	RxD-
5	DATA0+	12	DATA0-
6	CLOCK+	13	CLOCK-
7	DATA1+	14	DATA1-

Table 9-9 Interface Board Connector J1

J1-x	Signal/Description	J1-x	Signal/Description
1	CHASSIS	20	CLOCK-
2	CLOCK+	21	DATA0-
3	DATA0+	22	DATA1-
4	DATA1+	23	DATA2-
5	DATA2+	24	DATA3-
6	DATA3+	25	GND
7	FREQ0	26	FREQ1
8	FREQ2	27	MODE 0
9	MODE 1	28	MODE/AUX
10	ANALOG+ (not connected)	29	ANALOG- (not connected)
11	GND	30	GND
12	RxD-	31	RxD+
13	TxD-	32	TxD+
14	KEY-	33	KEY+

Copyright © 1998 Glenayre

Table 9-9 Interface Board Connector J1 (continued)

J1-x	Signal/Description	J1-x	Signal/Description
15	DIG OUT 6	34	DIG OUT 7
16	DIG OUT 4	35	DIG OUT 5
17	DIG OUT 2	36	DIG OUT 3
18	DIG OUT 0	37	DIG OUT 1
19	_RESET		

Table 9-10 Remote Select Input vs. Channel (I20)

Ch Sel 1 J1-7	Ch Sel 2 J1-26	Ch Sel 3 J1-8	Ch Sel 4 J1-9	Selected Channel
Open (HI)	Open (HI)	Open (HI)	Open (HI)	1
Ground (LO)	Open (HI)	Open (HI)	Open (HI)	2
Open (HI)	Ground (LO)	Open (HI)	Open (HI)	3
Ground (LO)	Ground (LO)	Open (HI)	Open (HI)	4
Open (HI)	Open (HI)	Ground (LO)	Open (HI)	5
Ground (LO)	Open (HI)	Ground (LO)	Open (HI)	6
Open (HI)	Ground (LO)	Ground (LO)	Open (HI)	7
Ground (LO)	Ground (LO)	Ground (LO)	Open (HI)	8
Open (HI)	Open (HI)	Open (HI)	Ground (LO)	9
Ground (LO)	Open (HI)	Open (HI)	Ground (LO)	10
Open (HI)	Ground (LO)	Open (HI)	Ground (LO)	11
Ground (LO)	Ground (LO)	Open (HI)	Ground (LO)	12
Open (HI)	Open (HI)	Ground (LO)	Ground (LO)	13
Ground (LO)	Open (HI)	Ground (LO)	Ground (LO)	14
Open (HI)	Ground (LO)	Ground (LO)	Ground (LO)	15
Ground (LO)	Ground (LO)	Ground (LO)	Ground (LO)	16

Table 9-11 Remote Select Input vs. Mode (I20)

Mode Sel 1: J1-27	Selected Mode
Ground (LO)	Analog (not supported)
Open (HI)	Digital

Copyright © 1998 Glenayre

d1021_ti.ix

Numerics

10-MHz oscillator
    setting of jumper 4-3
16-channel operation 7-4

A

A/D 9-5
AGC 6-7
alarm
    forward power 7-4
    low power 7-4
anti-aliasing filter 6-4
applicable documents 1-1
AUDIO INPUT ADJUST pot
    QT-1000 interface 9-1
    standard interface board 9-5

C

center frequency 7-4
channel
    change time, wideband exciter 4-4
    select - QT-1000 interface 9-4
    selection - standard interface board 9-7
control board
    part number 3-3
    removal and reinstallation view 8-7
control group 7-2
control voltage 6-15
controls and indicators
    AUDIO INPUT ADJUST 9-5
    front panel 5-2
    top view 3-5
    VCO adj 6-14
CPU 6-7

D

D/A 6-4, 6-6, 6-7
deviation 7-3
deviation parameter 7-4
documents, applicable 1-1
DQM 6-4
DSP modulator description 6-3

E

EEPROM 6-7
EIA 2-1
EIS A 2-1
exciter
    detailed functional diagram 6-12
    part number 3-3
    simplified functional diagram 3-6
    wideband channel-change time 4-4

F

filter, anti-aliasing 6-4
filtering parameter 7-4
FLEX 7-4
frequency
    channel center 7-4
    control -serial mode 7-4
    RF amplifier board 6-14
    RF circuit 6-1
    VCO board 6-14
functional diagram
    RF stage 6-2
    simple of exciter 3-6

G

GL3000 - OTF 7-4
GL-C2000 7-2, 7-3, 7-4, 7-6
Glenayre
    locations 1-1, 1-2
Golay 7-4
grounding 4-4

Copyright © 1998 Glenayre

d1021_ti.ix

I

I 6-3, 6-4
I/O
    connectors 4-2
    grounding 4-4
    J1 - standard interface board 9-9
    J2 - standard interface board 9-9
    J4 standard interface board 9-7
    rear panel 4-2
I20 interface 9-6
IF 6-4, 6-6, 6-14
inspection 4-1
interface 3-1
    standard 9-5
interface board
    part number 3-2
interface I/O board
    part number 3-3

J

J1
    GL-C2000 interface 7-6
    standard interface board 9-9
J10 6-14
J2 - standard interface board 9-9
J3 6-7, 6-14
    pin assignments 4-2
J4 6-14, 6-15
    standard interface board 9-7
J4 - QT-1000 interface 9-3
J6 6-7, 6-8
    pin assignments 4-3
J8 9-1
J9 6-14
jumper - control board settings 4-3
JW1 setting 4-3
JW2 setting 4-3

L

low-power mode 6-7

M

manual part numbers 1-1
MCU 6-4, 6-6, 6-7
memory caution 4-1, 8-1
mixer 6-6
    MCU 6-15
mode 7-3, 7-4
    emission 6-7
    select - QT-1000 interface 9-4
    select - standard interface board 9-8

N

NEC 7-4

O

offset parameter 7-4
on-the-fly 7-2, 7-3, 7-4, 7-6, 9-6
    interface view 7-5
OTF 9-6
    GL-C2000 7-4
OTL 7-2

P

P10 6-14
P4 6-14, 6-15
P9 6-14
parallel communications link 6-7
part number
    control board 3-3
    exciter 3-3
    interface board 3-2
    interface I/O board 3-3
password protection
    jumper 4-3
PEROM 6-4, 6-8
phase lock 6-6, 6-15
PLL 6-6, 6-15
POCSAG 7-4
power requirement 4-1

Copyright © 1998 Glenayre

d1021_ti.ix

Q

Q 6-3, 6-4
QT-1000 interface 9-1
    channel select 9-4
    J4 - main interface board 9-3
    mode select 9-4
quadrature 6-3, 6-4

R

RAM 6-7
rear panel - I/O connectors 4-2
rear view 3-4
removal and reinstallation
    exciter chassis 8-3
RF stage 6-15
    description 6-14
    functional diagram 6-2

S

SCI 6-7
serial frequency-control mode 7-4
site ID 7-2
SM 6-3, 6-4
specifications 2-1
SPI 6-7
standard interface board
    channel selection 9-7
    description 9-5
    I/O 9-7
    J1 9-9
    J2 9-9
    mode select 9-8
static caution 4-1
synthesizer 6-6, 6-15

T

test equipment requirement 4-1
tool requirement 4-1
top view 3-5
troubleshooting 7-6

U

unit ID 7-2

V

VCO 6-6
    front-panel adjustment 5-1
VCO ADJ 6-15, 7-1
VCO-2 adjustment 7-1
VDT 3-1
view
    control board removal and reinstallation 8-7
    exciter chassis 8-3
    front panel 5-2
    on-the-fly interface 7-5
    rear 3-4
    top 3-5
VSWR 6-8
    front-panel adjustment 5-1
    jumper internal or external 4-3
VT100 interface connector 4-2
    use for maintenance 7-1
    view 5-2

W

warranty 1-2
wideband exciter
    channel-change time 4-4

Copyright © 1998 Glenayre

Copyright © 1998 Glenayre

Glenayre GL2728
AC Input / 28 VDC Output Power Supply

Technical Manual

Specifications subject to change or improvement without notice.

Copyright © 1993 Glenayre Electronics, Inc.
All rights reserved. No part of this work may be reproduced or copied in any form or by any means - graphic, electronic or mechanical, including photocopying, recording, taping or information and retrieval system- without written permission of Glenayre Electronics, Inc.

Print Date: 11/22/93

176.0521

DOCUMENT CHANGE RECORD

ISSUE: 1
DATE: 88/10/02
CHANGES: None. Original Issue by Art Gau

ISSUE: 2
DATE: 92/07/29
CHANGES: Working limits - 265 Vac max., 850 VA max., 7A fuse, ripple reduction to 50 mV p-p.

ISSUE: B, Rev 1
DATE: 93/01/12
CHANGES: Document transferred to the Macintosh platform using Microsoft Word, incorporating the modifications per E.C.O. 105-7393.

ISSUE: C, Rev 1
DATE: 93/10/08
CHANGES: Addition of Introduction section, overhaul of sections, minor corrections, added and improved graphics. Renamed from "Operator's Manual" to "Technical Manaul".

Copyright © 1993 Glenayre, All Rights Reserved

TABLE OF CONTENTS

Section Page

1. Introduction 1

2. Specifications 2
   - 2.1. Input 2
   - 2.2. Output 2
   - 2.3. Protection and Certification 3
   - 2.4. Environmental 3
   - 2.5. Physical 3

3. Circuit Description 4

4. Installation and Adjustment 5
   - 4.1. Rear Panel Diagram 5
   - 4.2. Output Connections 5
   - 4.3. Supply Line Lengths 6
   - 4.4. Paralleling Two Supplies 6
   - 4.5. Adjustment Procedure 6

5. Troubleshooting 8
   - 5.1. Troubleshooting Guide 8
   - 5.2. Corporate Addresses 8

Copyright © 1993 Glenayre, All Rights Reserved

THIS PAGE INTENTIONALLY LEFT BLANK

Copyright © 1993 Glenayre, All Rights Reserved

1. INTRODUCTION

The Glenayre GL2728 regulated AC to DC converter is designed for dedicated use in a broad range of mobile radio, telecommunications and other industrial applications where a regulated 28 VDC is required.

The GL2728 can supply 28 VDC at 14 A from either a 115 Vac or 230 Vac input as determined from internal jumper strapping. The unit is rack mountable in a standard 19" rack and is 2 Rack Units high. The frequency of the external AC supply input may vary from 47 Hz to 440 Hz.

A green LED on the front panel, labelled PWR ON, indicates that the unit is powered and supplying 28 VDC.

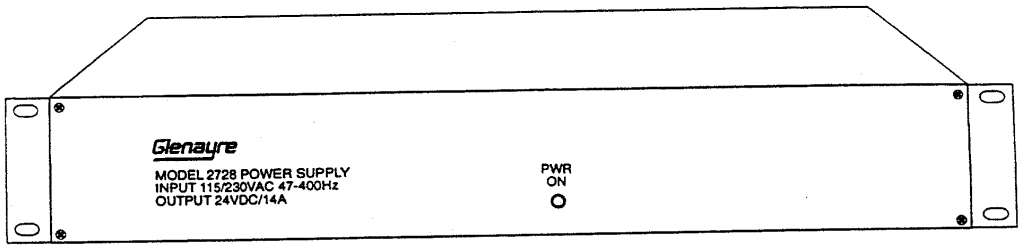

GL2728 Power Supply (front view)

Copyright © 1993 Glenayre, All Rights Reserved

2. SPECIFICATIONS

The following specifications for the GL2728 are subject to change or improvement without notice. All specifications are "typical" unless otherwise stated.

2.1. Input

Input Voltage	115 ±20 VAC 230 ±35 VAC
Input Current	8A max. @ 115 VAC 4A max. @ 230 VAC
Input VA	750 VA @ 115 VAC 850 VA @ 230 VAC
Input Frequency	47 Hz to 440 Hz

2.2. Output

Output Voltage	28 V at full load, adjustable 24 V to 28.5 V range
Output Current	14 A
Current Limit Setting	14.5 A
Efficiency (typical)	85%
Line Regulation	±1% (280 mV) over input voltage range
Load Regulation	±2% no load to full load (550 mV)
Overvoltage Protection	Self limiting to 31V ±1V DC
Output Ripple and Noise	50 mV_{p-p} (30 MHz BW) @ 25°C

Copyright © 1993 Glenayre, All Rights Reserved

2.3. Protection and Certification

Input Protection	10 A fuse @ 115 VAC (Buss ABC) 7 A fuse @ 230 VAC (Buss MTH)
Surge Energy Dissipation	30 joules max.
Isolation Voltage	2500 VDC Input to Case 2500 VDC Input to Output 500 VDC Output to Case
EMI Filter	Internal filter to comply with FCC part 15 Level A
CSA and UL Approvals	Certified in accordance with NRTL Testing Program for compliance with CSA 1402C, Level 5 and UL std. 1012 – File #LR 86711-4

2.4. Environmental

Operating Temperature	-30°C to +60°C
Storage Temperature	-30°C to +70°C
Humidity	0% to 95% (non-condensing) @ 25°C
Cooling	Natural convection

2.5. Physical

Size	17" x 7.3" x 3.5" (432 mm x 186 mm x 89 mm)
Weight	13.2 lbs. (6 kg)

Copyright © 1993 Glenayre, All Rights Reserved

3. CIRCUIT DESCRIPTION

The GL2728 features a highly reliable design using a conversion circuit operating at a switching frequency of 40 kHz. The output voltage is maintained at a constant level by automatically varying the duty cycle of the switching circuit to accommodate changes in line and load conditions. Each unit incorporates a current limiting circuit to protect it from the effects of output overload or short-circuit.

"Rectangular" current limiting allows the GL2728 to have its outputs paralleled in applications requiring greater than 14 amps output.

An overvoltage protection circuit is incorporated to protect the load against abnormally high output voltage in case the output voltage regulation circuit fails.

Copyright © 1993 Glenayre, All Rights Reserved

4. INSTALLATION AND ADJUSTMENT

The power supply mounts on a standard 19" rack. When installed with other equipment, air flow to the supply must not be restricted. **A minimum of 1 U (or 1.75") spacing above the unit is strongly recommended when operating continuously at full load and elevated temperatures.** If less spacing is required, please contact Glenayre for application information.

4.1. Rear Panel Diagram

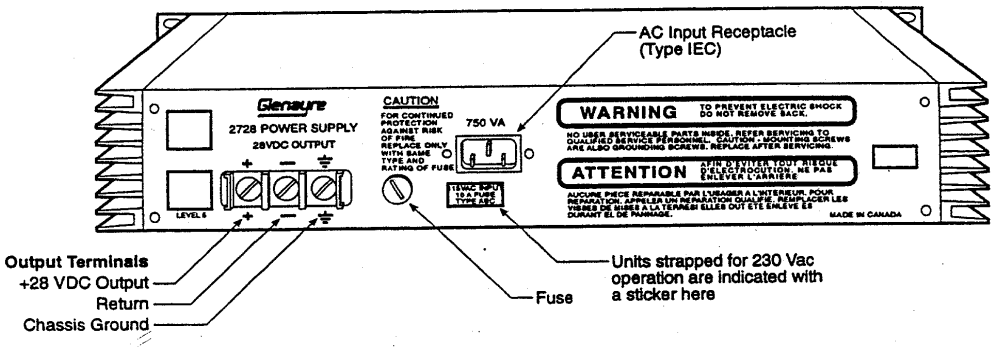

Power Supply Output Connections (Rear View)

4.2. Output Connections

Output connections are made to a terminal strip protruding through an opening in the metal enclosure of the unit. The outputs of several units of the same type may be connected in parallel for increased total output current or for automatic backup operation. The input connection is an IEC connector.

The 28 Volt DC output voltage appears between the +28 VDC Output and the Return terminals when the unit is operating, where the +28 VDC Output is positive with respect to the Return terminal.

Copyright © 1993 Glenayre, All Rights Reserved

Connection	Label
+28 VDC Output	+
Return	–
Chassis Ground	⏚

The unit's output circuit is floating, so either pole of the output may be grounded if desired.

4.3. Supply Line Lengths

If a unit is to be operated some distance from the load, it may be necessary to use a larger than normal wire size to prevent excessive voltage drops.

The following table gives the approximate maximum total loop lengths for output wires with the given current rating, maximum line drop, and wire sizes. The length given is the total loop length, which is twice the single wire length in a return wire circuit, or the sum of the "hot" and "ground" wire lengths in a grounded circuit.

Wire Size (AWG)	#14	#12	#10	#8
Maximim Loop Length for V_{drop} = 0.5 V @ 14 A	12'	20'	31'	50'

4.4. Paralleling Two Supplies

Two GL2728 units may have their outputs paralleled for applications where more current is required. In this configuration the wire pairs from the GL2728 output terminals to the equipment being supplied, should be the same length for optimum current sharing between the two GL2728 supplies.

4.5. Adjustment Procedure

Caution

Use the correct input voltage.

The unit will operate only if the rated supply voltage applied to the input is of the correct voltage (115 or 230 VAC). The output voltage set to 28.0VDC (GL2728) and the current limiting circuit is preset to 14.5 A. If adjustment is necessary, the adjustment potentiometers R34 (voltage adjust) and R8 (current adjust) are accessible after removal of the top and back panels. Clockwise rotation of the potentiometer shaft increases the voltage output or the current limiting value.

Copyright © 1993 Glenayre, All Rights Reserved

Note

Do not adjust the current limit beyond the specified limit as detailed in the specification.

Caution

Danger - Live AC voltages are present - Adjustment to be done only by Qualified Technical Personnel.

Copyright © 1993 Glenayre, All Rights Reserved

5. TROUBLESHOOTING

5.1. Troubleshooting Guide

If the unit fails to operate, perform the following steps:

1. Check if the input supply is connected with the correct voltage.
2. Check the input fuse. If it is blown, replace it only with the correct fuse as per the specification table or as marked at the fuse location.
3. Check the attached equipment for connection errors, shorts, incorrect polarity, and other problems.
4. If these procedures do not restore the unit to its normal operating condition then return it to the factory for repair.

5.2. Corporate Addresses

Canada	USA
Glenayre Customer Service 1570 Kootenay Street Vancouver, B.C. Canada V5K 5B8	Glenayre Customer Service One Quintron Way Quincy, IL 62301
Telephone: (604) 293-1611 Fax: (604) 293-4301	Telephone: (217) 223-3211 Fax: (217) 223-3284

Copyright © 1993 Glenayre, All Rights Reserved