Gold Line GL-T8500-CN/
GL-T8600-CN System

USER MANUAL
PN 9110.00163 (old part number = 916-8A00-001)
REV F
RELEASED

Specifications subject to change without notice

Copyright © 1998 Glenayre

All rights reserved. No part of this work may be reproduced or copied in any form or by any means—graphic, electronic, or mechanical, including photocopying, recording, taping, or information-retrieval system—without written permission of Glenayre.

Document Change Record

Revision: A
Date: 05/25/95
Changes: new format

Issue: Revision B
Date: 10/17/95
Changes: Wording Section 4.1.2, 7 inches required between cabinets.

Issue: Rev. C
Date: 02/01/96
Changes: new format

Issue: Rev D
Date: 07/09/96
Changes: made released

Issue: Rev E
Date: 02/20/97
Changes: changed rackup in Figures 1-3, 1-6, 3-5, 3-6, 3-7, and 3-8

Issue: Rev F
Date: 11/09/98
Changes: changed simplified block diagram to include GL-T8500-CN/GL-T8600-CN

Copyright © 1998 Glenayre

sec_1.toc

Table of Contents

1 GENERAL 1-1

1.1 Manual Scope 1-1

1.2 Applicable Documents 1-1

1.3 Manual Sections 1-1

1.4 Hardware Identification 1-2

2 SPECIFICATIONS 2-1

2.1 Introduction 2-1

2.2 Specifications 2-1

3 DESCRIPTION 3-1

3.1 Introduction 3-1

3.2 Physical Description. 3-1

3.2.1 Exciter / PA Control Unit 3-2

3.2.2 Power Amplifier (PA). 3-2

3.2.3 Power Supply 3-2

3.2.4 Transmitter Controller 3-3

3.2.5 Link Receiver 3-3

3.2.6 Video Display Terminal (VDT). 3-3

3.2.7 Rack Cabinet 3-3

3.3 Simplified Functional Description 3-3

3.3.1 Paging Site 3-3

3.3.2 Paging Site Control 3-4

3.3.3 Link Receiver 3-4

3.3.4 Video Display Terminal. 3-4

3.3.5 Interface I/O Board 3-4

4 INSTALLATION AND SETUP 4-1

4.1 Installation 4-1

4.1.1 Tools and Equipment Required 4-1

4.1.2 Rack Positioning 4-1

4.1.3 Rack Grounding. 4-2

4.1.4 Inspection 4-2

4.1.5 Primary Power Requirements 4-2

4.1.6 Equipment Cabling 4-3

4.1.7 Dc Only Sites 4-3

4.1.8 System Connectors 4-3

Copyright © 1998 Glenayre

4.2 Setup 4-4
4.2.1 Introduction 4-4
4.2.2 Setup Procedures 4-4
5 OPERATION 5-1
5.1 Introduction 5-1
5.1.1 Precautions and Hazards 5-1
5.2 Local Operation 5-1
5.3 Front Panels Controls and Indicators 5-1
5.3.1 Exciter/PA Control Unit 5-1
5.3.2 Power Amplifier (PA) 5-2
5.3.3 Power Supply 5-2
5.3.4 Transmitter Controller 5-2
5.3.5 Link Receiver 5-2
5.4 Front-Panel Operations 5-3
5.4.1 Resetting the Transmitter Controller 5-3
5.4.2 Receiver Power Control 5-3
5.4.3 Receiver Audio Monitoring Level 5-3
5.4.4 Receiver Squelch Setting 5-3
5.4.5 Receiver Key Options Setting 5-3
6 THEORY OF OPERATION 6-1
6.1 Introduction 6-1
6.2 Simplified Functional Descriptions 6-1
6.2.1 Paging Site 6-1
6.2.2 Paging Transmitter 6-1
6.2.3 Exciter / PA Control Unit 6-1
6.2.4 Power Amplifier 6-2
6.2.5 Power Supply 6-2
6.2.6 Link Receiver 6-2
6.2.7 Video Display Terminal 6-2
6.3 Site Signal Flows 6-2
6.3.1 Site RF Signal Flow 6-2
6.3.2 Site Audio Signal Flow 6-3
6.3.3 Site Control Signal Flow 6-3
6.3.4 Status Signal Flow 6-3
6.4 Site Signals 6-3

Copyright © 1998 Glenayre

sec_1.toc

7 MAINTENANCE 7-1

7.1 Introduction 7-1

7.2 Maintenance Procedures 7-1

7.2.1 PA Current Check. 7-1

7.2.2 Dc Ripple Check 7-1

7.2.3 Audio Level Check (QT-1000 only) 7-2

7.2.4 VDT Maintenance. 7-2

8 CHECKOUT AND TROUBLESHOOTING 8-1

8.1 Introduction 8-1

8.2 Checkout Procedures 8-1

8.2.1 Dc Voltage Verification. 8-1

8.2.2 VDT Power-up Verification 8-1

8.2.3 Cooling Fans Check. 8-1

8.3 Troubleshooting Procedures. 8-1

9 REMOVAL AND REINSTALLATION. 8-1

9.1 Introduction 8-1

9.2 Required Tools. 8-1

9.3 Removal 8-1

9.4 Reinstallation 8-1

Copyright © 1998 Glenayre

Copyright © 1998 Glenayre

sec_1.lof

List of Figures

Figure 1-1 GL-T8500 Transmitter Isometric Front View 1-3
Figure 1-2 GL-T8600 Transmitter Isometric Front View 1-4
Figure 1-3 GL-T8500 Transmitter (W/C2000) 1-5
Figure 1-4 GL-T8600 Transmitter (W/C2000) 1-6
Figure 3-1 Gold Line GL-T8500 Paging Site Front View Without Receiver 3-5
Figure 3-2 GL-T8500 Paging Site Back View With Receiver 3-6
Figure 3-3 Gold Line GL-T8600 Paging Site Front View Without Receiver 3-7
Figure 3-4 Gold Line GL-T8600 Paging Site Back View With Receiver 3-8
Figure 3-5 GL-T8500 Rackup (w/C2000) 3-9
Figure 3-6 GL-T8500 Transmitter Back View (w/C2000) 3-10
Figure 3-7 GL-T8600 Rackup (w/C2000) 3-11
Figure 3-8 GL-T8600 Transmitter Back View (w/C2000) 3-12
Figure 3-9 GL-T8500/8600 Simplified Block Diagram 3-13
Figure 4-1 Site Installation Diagram 4-9
Figure 4-2 Site Dc Connection Diagram (w/QT-1000). 4-10
Figure 4-3 Site Interconnect Diagram (w/QT-1000) 4-11
Figure 4-4 Site Dc Connection Diagram (w/C2000) 4-12
Figure 4-5 Site Interconnect Diagram (w/C2000) 4-13
Figure 6-1 Paging Network Signal Diagram (w/QT-1000). 6-4
Figure 6-2 Paging Network Signal Diagram (w/C2000) 6-5
Figure 6-3 Site Signal-Flow Diagram 6-6
Figure 6-4 Site Signals Diagram (w/QT-1000) 6-8
Figure 6-5 Site Signal Diagram (w/C2000) 6-10

Copyright © 1998 Glenayre

Copyright © 1998 Glenayre

sec_1.lot

Table of Contents

Table 1-1 Applicable Documents 1-1
Table 1-2 Manual Sections 1-2
Table 2-1 Specifications 2-2
Table 3-1 Site Equipment List 3-2
Table 4-1 Required Tools and Equipment 4-1
Table 4-2 Power Requirements 4-2
Table 4-3 Equipment Connectors 4-4

Copyright © 1998 Glenayre

Copyright © 1998 Glenayre

sec_1

1 GENERAL

1.1 Manual Scope

This manual presents the Gold Line GL-T8500 (250W) and GL-T8600 (500W) transmitters, which operate in the 900-MHz range. It includes the QT-1000 interface board with an interface I/O board. Other paging site equipment is included as listed below.

- transmitter controller
- receiver
- video display terminal (VDT)
- equipment racks

1.2 Applicable Documents

This manual is incomplete without additional manuals. Refer to *Table 1-1* for a list of applicable documents, their part numbers, and a brief description of each.

Table 1-1 Applicable Documents

document	part number	description
QT-1000 transmitter controller manuals	IBPHASE3	describes installation, setup, and operation of QT-1000 control system
GL-T8500/8600 system manual	9110.00163	this document
GL-T8500/8600 VDT manual	9110.00164	describes 250/500-W, 900-MHz Gold Line VDT software operation
exciter / PA control manual	9110.00172	describes exciter/PA control equipment with interfaces
GL-T8500 power amplifier manual	9110.00160	describes 250-W, 900 MHz Gold Line power amplifier
GL-T8600 power amplifier manual	9110.00162	describes 500-W, 900 MHz Gold Line power amplifier
Gold Line power supply manual	9110.00159	describes 55A/90A Gold Line power supply equipment

1.3 Manual Sections

Refer to *Table 1-2*. This table lists the sections in this manual, and provides a brief description of the content of each section.

Copyright © 1998 Glenayre

Table 1-2 Manual Sections

section	contents
1. General	contains scope and content of this entire manual and lists other applicable documents to supplement this manual
2. Specifications	contains overall and selected equipment specifications, and those not given in other equipment manuals
3. Description	contains overall physical and functional equipment descriptions
4. Installation & Setup	contains relevant equipment installation information and setup procedures
5. Site Operation	contains overall description of site operation using VDT menu based commands and procedures
6. Theory of Operation	contains overall block-diagram level theory of operation for equipment listed in paragraph 1.1 above as it functions as a unit
7. Maintenance	contains necessary maintenance procedures which keep site operating within specified parameters
8. Checkout and Troubleshooting	contains information needed to checkout and troubleshoot overall equipment performance
9. Removal and Reinstallation	contains information needed to remove and reinstall the rack and equipment contained in it

1.4 Hardware Identification

Refer to *Figure 1-1* and Figure 1-2. These show the GL-T8500 and 8600 transmitters with a QT-1000 transmitter controller and an RL-903 link receiver, for equipment identification. Also, refer to *Figure 1-3* and *Figure 1-4*. These show the GL-T8500 and 8600 transmitters with a C2000 transmitter controller and an RL-903 link receiver, for equipment identification.

Copyright © 1998 Glenayre

sec_1

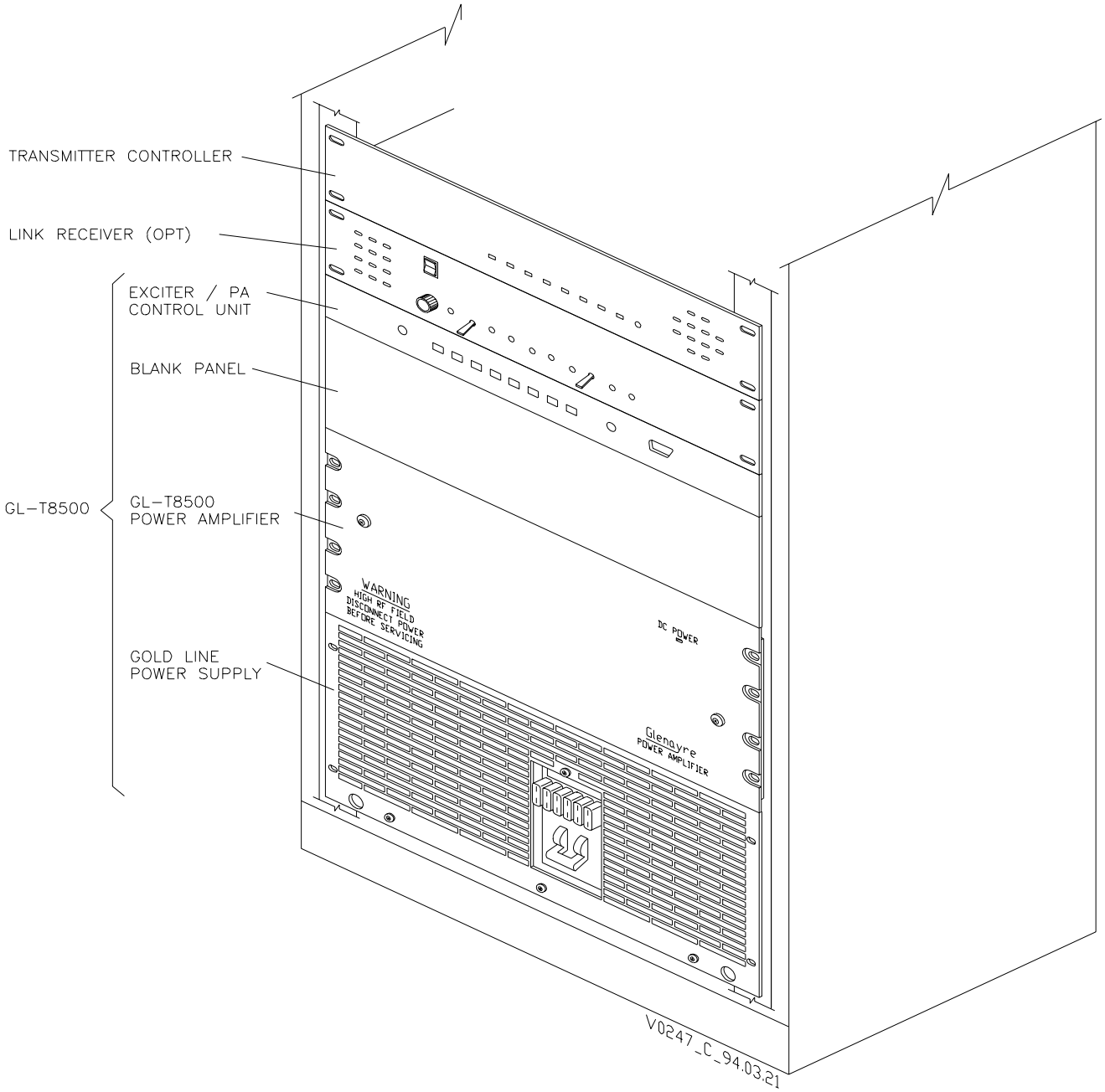

Figure 1-1 GL-T8500 Transmitter Isometric Front View

Copyright © 1998 Glenayre

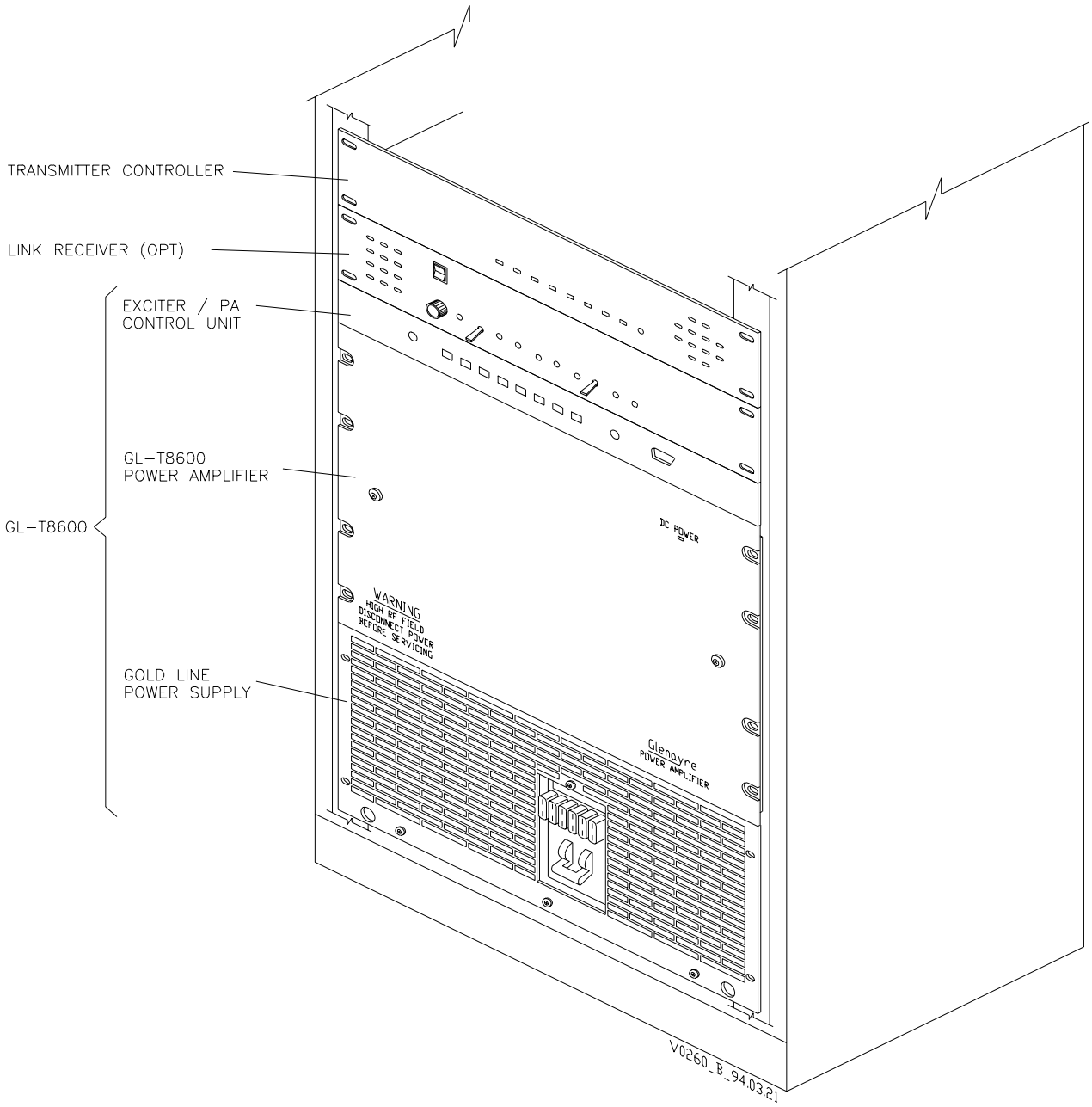

Figure 1-2 GL-T8600 Transmitter Isometric Front View

Copyright © 1998 Glenayre

sec_1

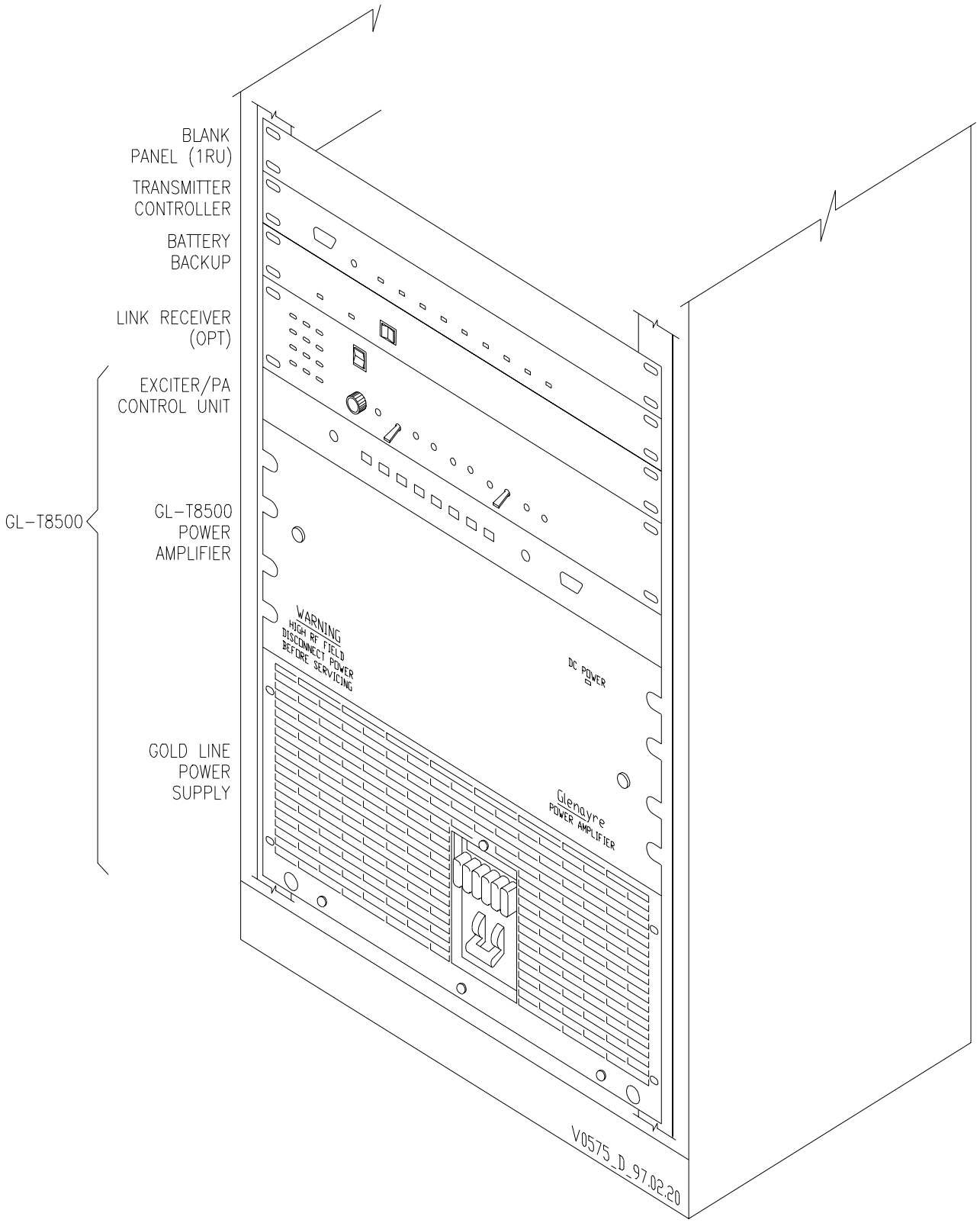

Figure 1-3 GL-T8500 Transmitter (W/C2000)

Copyright © 1998 Glenayre

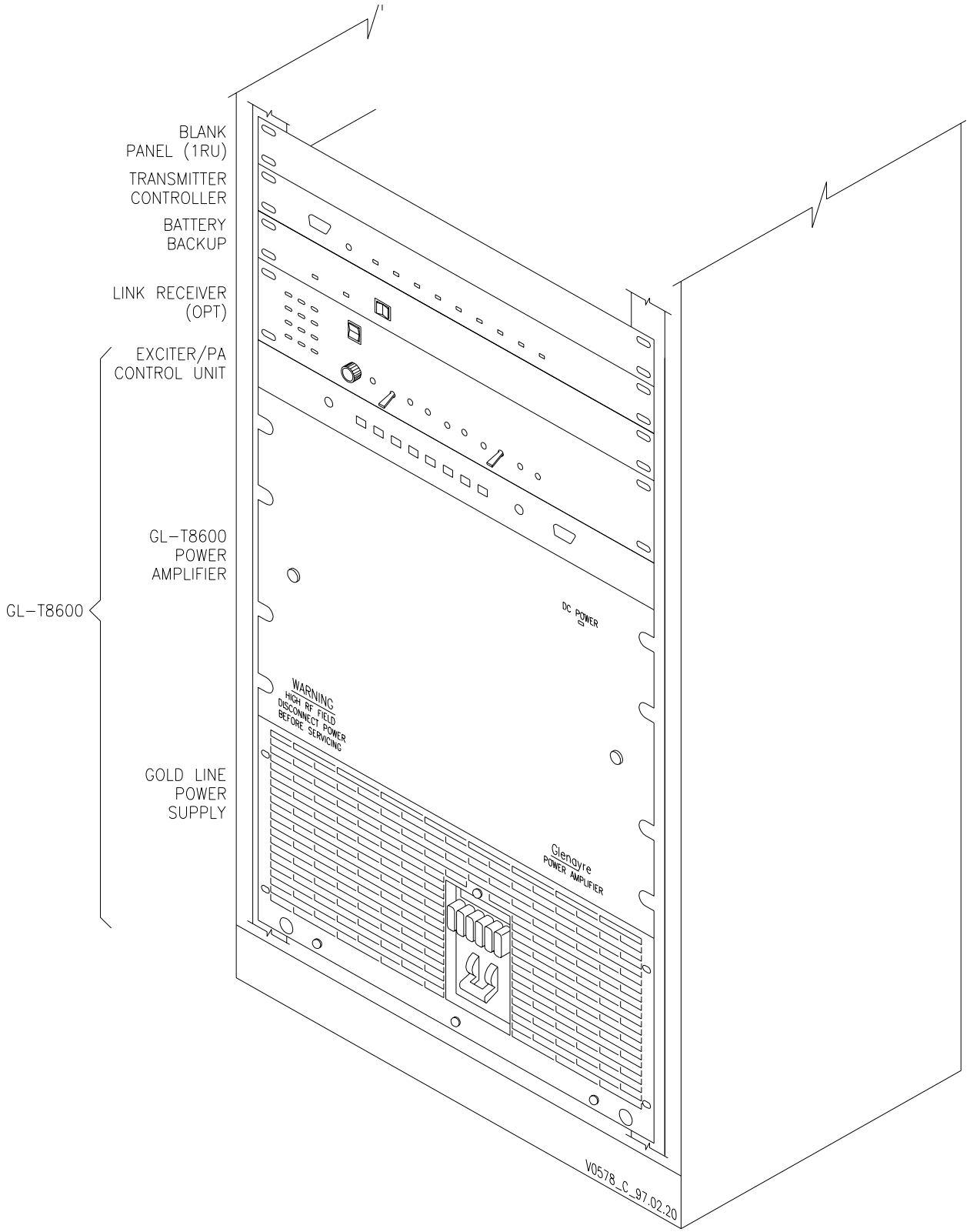

Figure 1-4 GL-T8600 Transmitter (W/C2000)

Copyright © 1998 Glenayre

sec_2

2 SPECIFICATIONS

2.1 Introduction

Specifications given in this section pertain to the equipment described in section three of this manual. Additional equipment specifications are given in the individual equipment user manuals. Test and measurement equipment is calibrated in accordance with standards established by the National Institute of Standards and Technology (NIST).

2.2 Specifications

Refer to *Table 2-1*.

Copyright © 1998 Glenayre

Table 2-1 Specifications

characteristic	condition	specification
Electrical		
ac input voltage	50/60 Hz	GL-T8500, 120/100 or 220/200 Vac
	50/60 Hz	GL-T8600, 220/200 Vac
ac input load	120V w/tx keyed	GL-T8500, 12-17 A
	220V w/tx keyed	GL-T8500, 6-10 A GL-T8600, 12-17 A
dc input voltage	see ripple spec	23-28 Vdc, full load-no load
dc input load	see ripple spec	GL-T8500, 35-50 A @ 25 Vdc
	see ripple spec	GL-T8600, 70-90 A @ 25 Vdc
dc input ripple	up to 120 Hz over 120 Hz	1.5 Vp-p max 50 mVp-p max
audio input	balanced 600 ohm	-30 to +10 dBm; refer to exciter manual
RF output	continuous duty operating range	GL-T8500, 100-300W (sing. circ. out) GL-T8600, 200-600W (sing. circ. out) GL-T8600, 200-550W (trip. circ. out)
Physical and Environmental		
dimensions	72I cabinet H:W:D	72.6 in: 23 in: 24 in 180 cm: 58 cm: 60 cm
weights	72I cabinet empty	approx 210 lb (462 kg)
maximum operating elevation	continuous operation at rated power	10,000 ft or 3050 m (see temperature derating factor)
temperature range	operating storage	-30 to +60 degrees C -55 to +70 degrees C
temperature derating factor	above 5000 ft or above 1525 m	2 degrees C per 1000 ft or 2 degrees C per 305 m
humidity	operating	0-95 % RH noncondensing
certification	FCC identifiers	GL-T8500: BFLGL-T8500 GL-T8600: BFLGL-T8600

Copyright © 1998 Glenayre

sec_3

3 DESCRIPTION

3.1 Introduction

The Gold Line GL-T8500 and GL-T8600 paging site is generally just one of several sites in the larger paging network. Equipment and options that comprise a particular site may vary depending on paging system requirements. Paging site operating characteristics are determined by hardware options and controlling software features.

Note the distinction between the paging site and the paging transmitter. A GL-T8500 or GL-T8600 paging site consists of a Gold Line paging transmitter, a receiver (non-wireline applications), and a transmitter controller. A paging transmitter consists of an exciter, a power amplifier, and a power supply. The receiver and transmitter controller provide support functions for the paging transmitter which allows it to function as a part of a larger paging network.

The purpose of a paging transmitter is to modulate a specific RF carrier channel with paging information and amplify it for broadcast. The paging transmitter cannot function in a paging network without the other site equipment. The purpose of a paging site is to broadcast paging information on a specific channel (frequency) at a specific time. Paging site equipment is racked together for practical and functional reasons. The paging site broadcasts paging information in response to commands from the paging terminal. All of the paging site equipment is usually part of a larger paging network, which is typically comprised of several paging sites.

3.2 Physical Description

Refer to *Figure 3-1* and *Figure 3-2*, for equipment names, identifying features, and equipment racking order. Refer to *Table 3-1*, for equipment part numbers, and brief descriptions. Refer to *Figure 3-3* and *Figure 3-4*, for connector names and locations. Refer to the individual equipment user manuals for more information.

Refer to *Figure 3-5*, *Figure 3-6*, *Figure 3-7*, and *Figure 3-8*. These provide similar information as those listed above but feature the C2000 transmitter controller.

Copyright © 1998 Glenayre

.

Table 3-1 Site Equipment List

equipment	part number	function
power supply 55 A version 90 A version	 265-0082-012 265-0082-006	provides dc to site equipment
power amplifier GL-T8500 GL-T8600	 265-0082-013 265-0082-005	amplifies 900 MHz RF for broadcast
exciter/PA control unit	refer to exciter manual	generates then modulates RF; controls PA I/O activities
link receiver (RL-903)	265-00301-xxx, see receiver manual for configurations & part No.	receives data and commands from the system controller
transmitter controller		controls paging transmitter activities; performs I/O functions for paging site

3.2.1 Exciter / PA Control Unit

The Gold Line exciter/ PA control unit is one rack unit high. It is racked where shown and is held in place with four machine screws. The top cover is removable for access to subassemblies, jumpers, and adjustments contained in the unit. All but one of its connectors are on the back of the unit. The front of this unit has a connector which allows the VDT to be connected to it.

3.2.2 Power Amplifier (PA)

The Gold Line PA is normally installed above the power supply and is held in place with several machine screws. By removing the front cover, internal components and subassemblies can be accessed without removing the PA from the rack. All PA I/O connections are made from the back. Each power amplifier is equipped with an RF circulator mounted on the PA heatsink.

3.2.3 Power Supply

The Gold Line power supply is supported by a shelf that is mounted to the bottom of the rack and is held in place by several machine screws along the bottom front. The perf panel on the supply front is for cooling ventilation; do not obstruct it. Some components can be accessed by removing the perf panel; to access others, the supply must be removed from the rack. All interconnections are made at the back where the connectors are accessible. A connector-ended cable inside the supply allows quick disconnection from the equipment rack wiring harness.

Copyright © 1998 Glenayre

3.2.4 Transmitter Controller

The transmitter controller is normally racked at the top. A controller may or may not be mounted to the rack with slide rails. By loosening the two thumbscrews on the front of the TXC, the controller slides forward from the rack. By loosening the four top cover thumbscrews, the top can be removed for access to the subassemblies, jumpers, indicators, and adjustments contained in the unit. On the back of the transmitter controller are a variety of connectors which are not all used for any one particular application. When using a QT1000 controller, do not rely on identifiers which are molded in the back of the TXC; use the applicable figures provided in this manual.

3.2.5 Link Receiver

3.2.5.1 RL-903

The receiver is racked below the transmitter controller. By loosening the top cover screws, the top can be removed for access to the subassemblies, jumpers, and adjustments contained in the unit. All interconnections to other site equipment are made to connectors on the back of the receiver. Refer to the receiver user manual for more information.

3.2.6 Video Display Terminal (VDT)

The VDT is required for setup, local control, and monitoring of the Gold Line transmitter. It is also required for local interrogation of the transmitter controller. The VDT can be any compatible laptop or desktop computer running a VT-100 emulation program. The VDT has a brightness and contrast control to accommodate various lighting conditions and probably has its own power conversion and supply system.

3.2.7 Rack Cabinet

An air plenum covers the back of the power amplifier when the transmitter is installed in a 72-inch rack cabinet; this provides improved cooling. Connectors are accessible with the air plenum removed.

3.3 Simplified Functional Description

3.3.1 Paging Site

Refer to *Figure 3-9*, for a block-diagram representation of the paging site equipment.

The paging site receives paging and command information from equipment outside the paging site through telephone land lines or a link receiver. Incoming information is decoded by the transmitter controller and sent to the exciter / PA control unit, which uses a microprocessor to translate received information into useful paging functions. The exciter / PA control unit generates modulated RF and control signals which are sent to the power amplifier. The PA amplifies and broadcasts the modulated RF .

Copyright © 1998 Glenayre

The purpose of the exciter/PA control unit is twofold. The exciter section generates a modulated RF carrier which is applied to the input of the PA. The PA control section controls and monitors the PA using a microprocessor based system.

3.3.2 Paging Site Control

The Gold Line paging transmitter has divided control functions. Since the power amplifier has no internal control circuitry, the exciter / PA control unit sends commands to the PA and receives status information from the PA.

3.3.3 Link Receiver

The link receiver connects the paging site equipment to the off-site paging equipment when telephone land lines are not used. It receives paging data and commands and forwards that information to the transmitter controller.

3.3.4 Video Display Terminal

The VDT interfaces the transmitter through the connector on the front of the exciter. Refer to the VT-100 VDT user manual for screen display details.

3.3.5 Interface I/O Board

The interface board is mounted to the rear of the exciter / PA control unit with four machine screws. The terminal board and D-sub connector on the interface I/O board provide identical electrical interface through different physical configurations. Refer to the exciter / PA control unit user manual for more information.

Copyright © 1998 Glenayre

sec_3

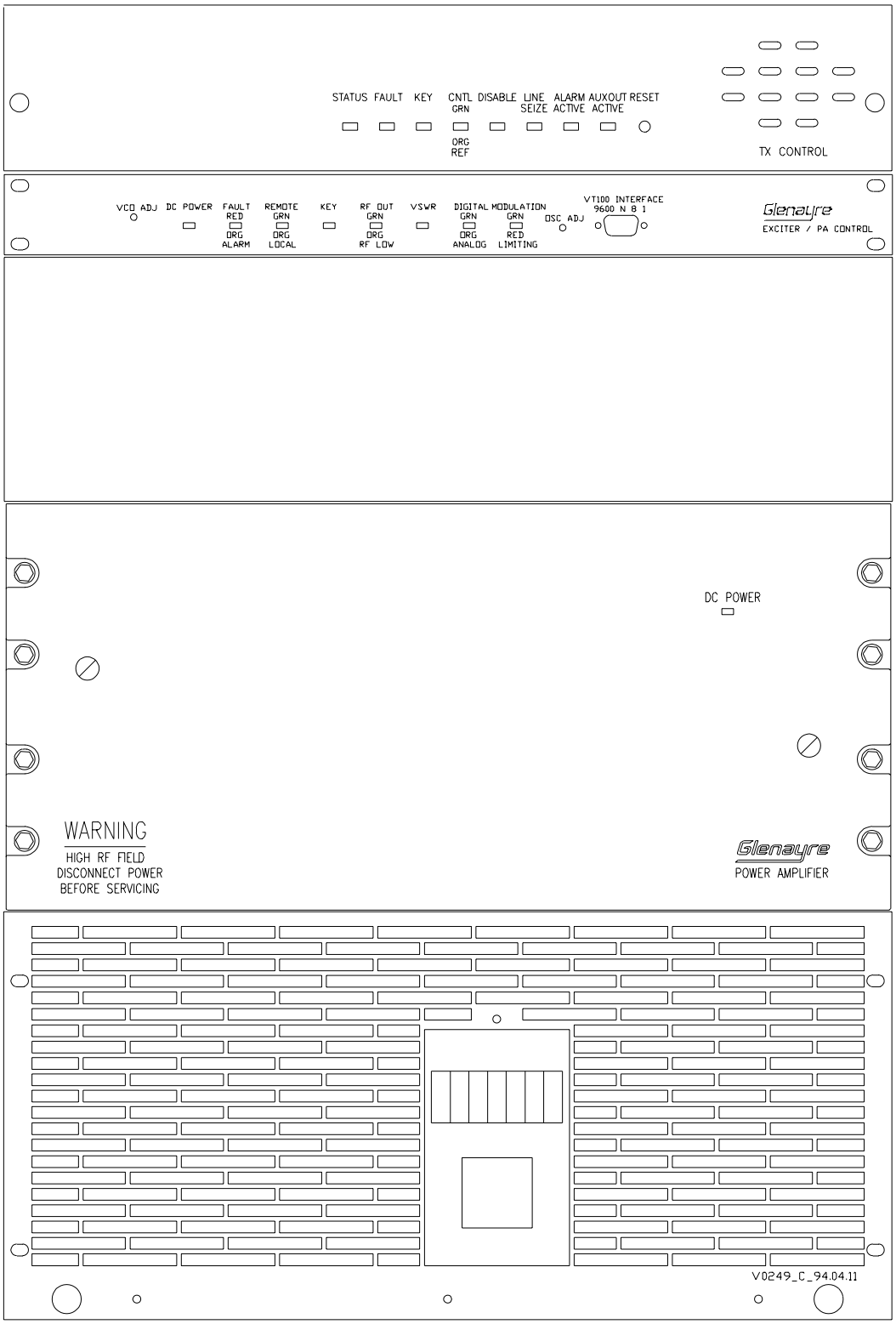

Figure 3-1 Gold Line GL-T8500 Paging Site Front View Without Receiver

Copyright © 1998 Glenayre

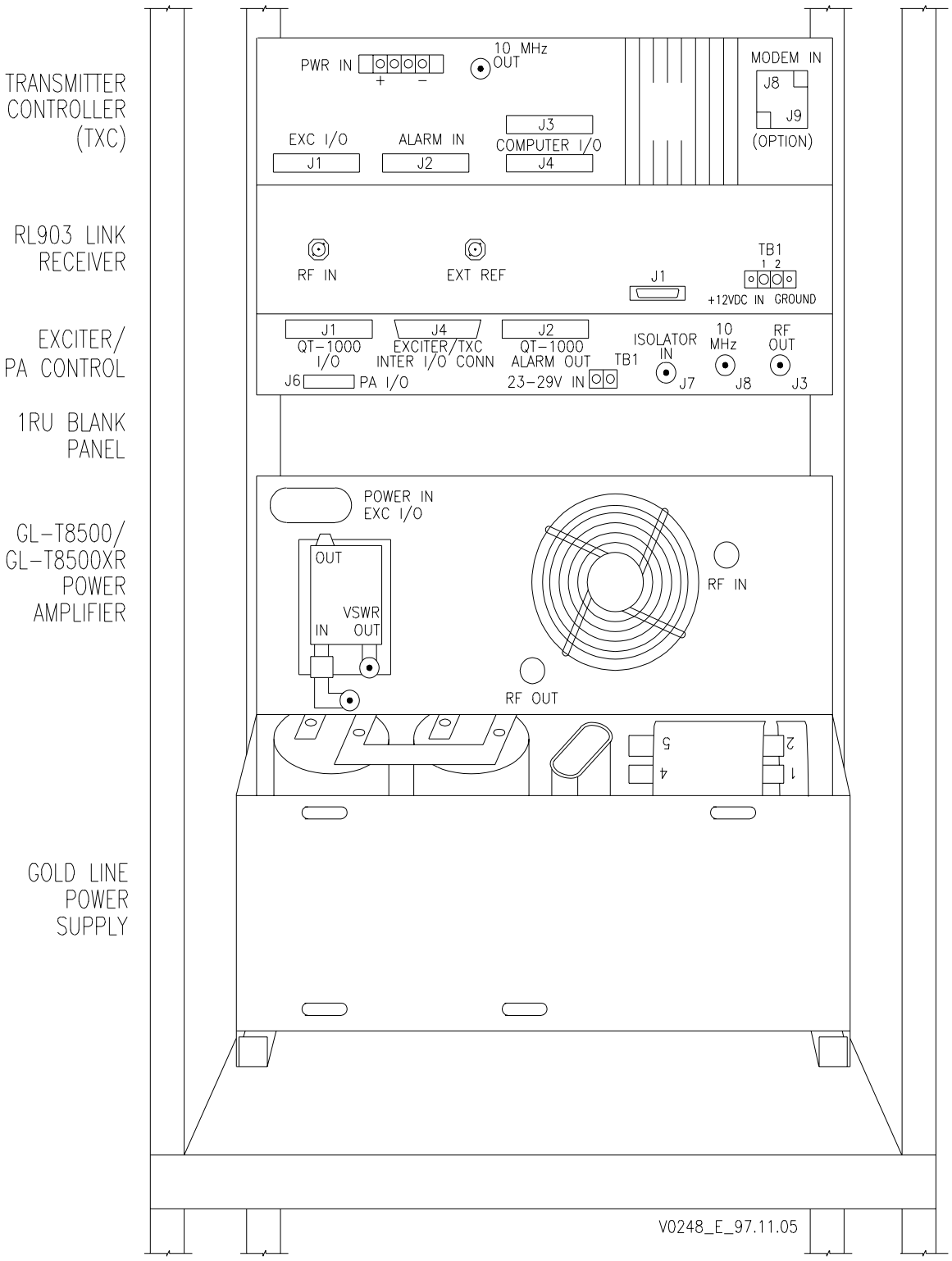

Figure 3-2 GL-T8500 Paging Site Back View With Receiver

Copyright © 1998 Glenayre

sec_3

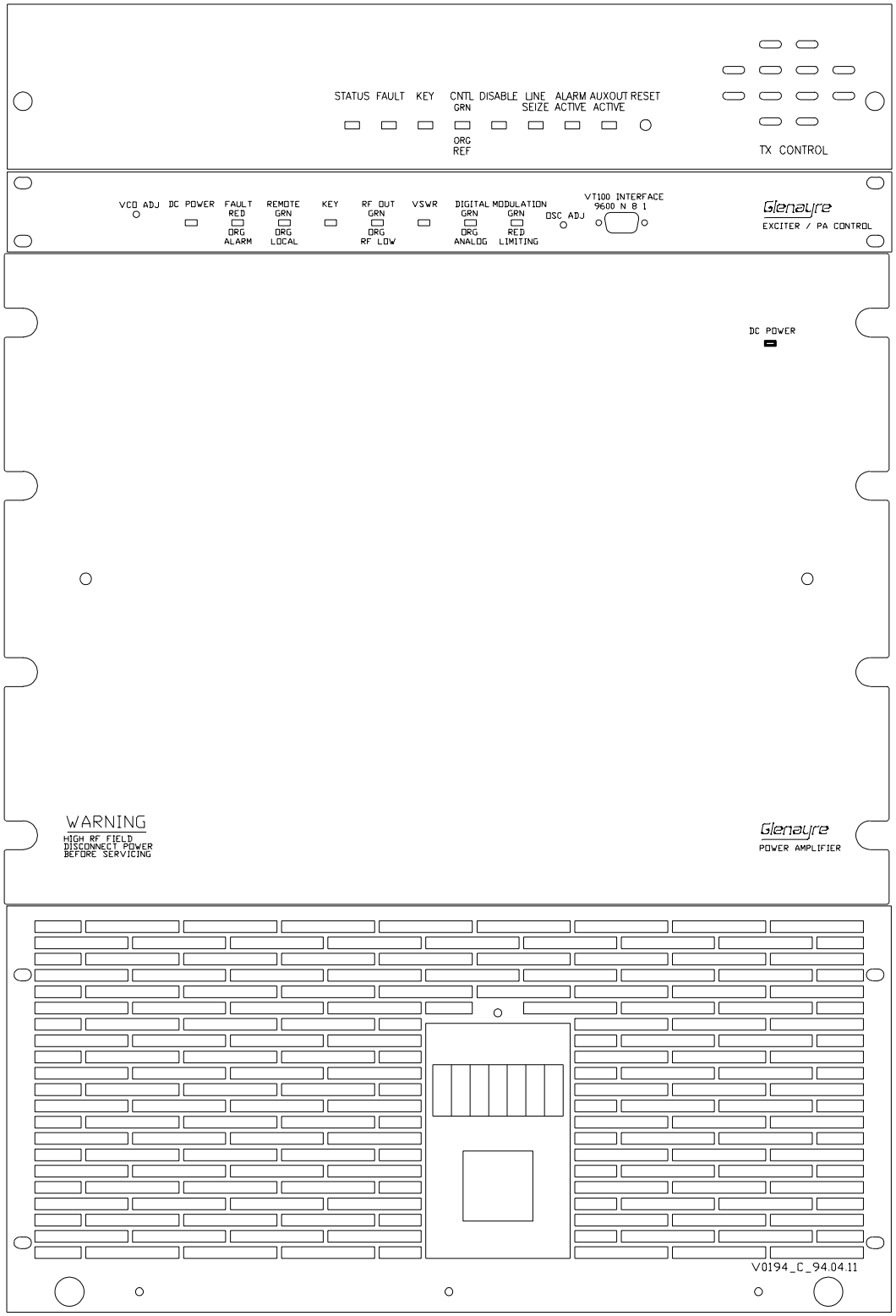

Figure 3-3 Gold Line GL-T8600 Paging Site Front View Without Receiver

Copyright © 1998 Glenayre

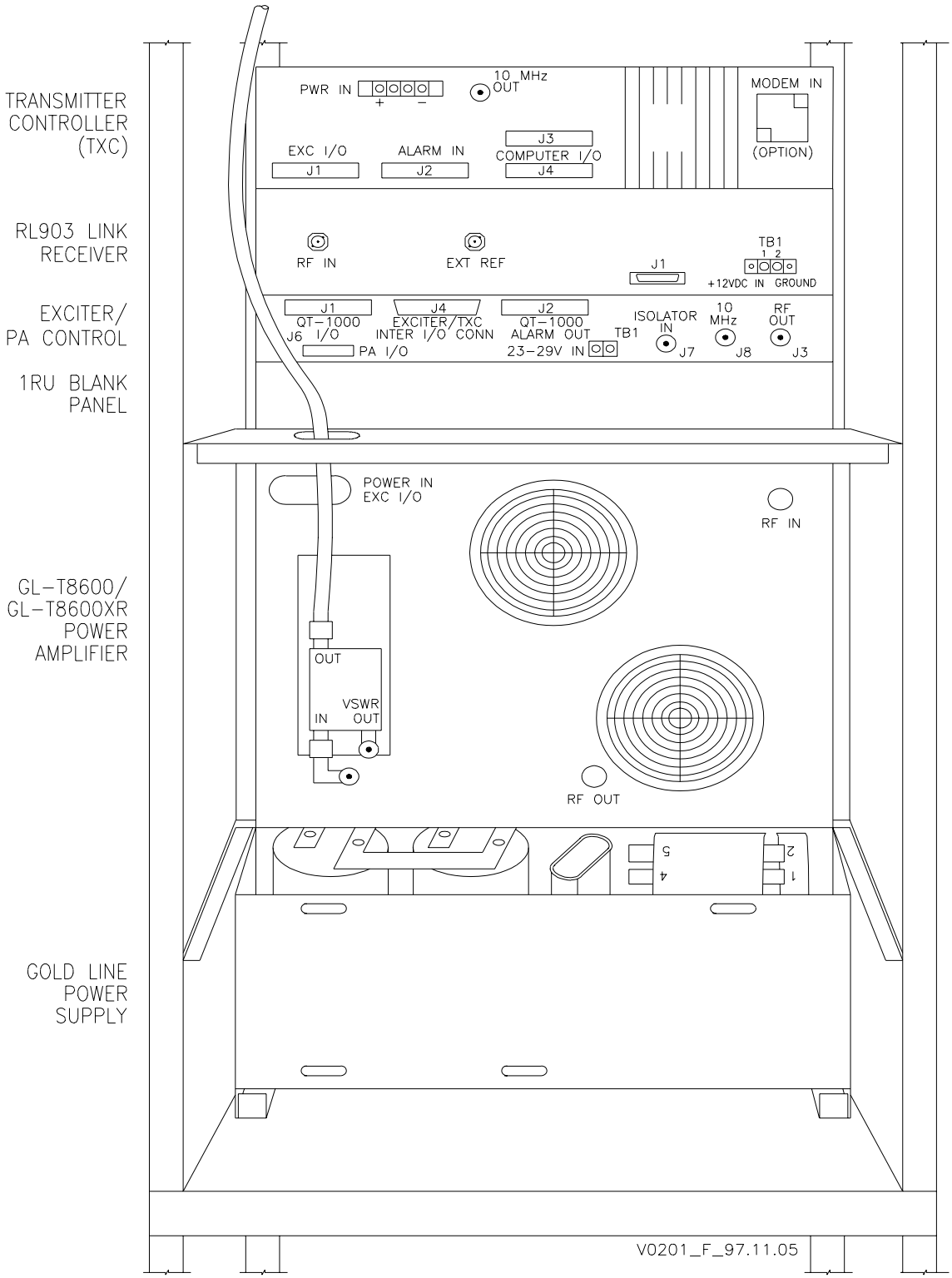

Figure 3-4 Gold Line GL-T8600 Paging Site Back View With Receiver

Copyright © 1998 Glenayre

sec_3

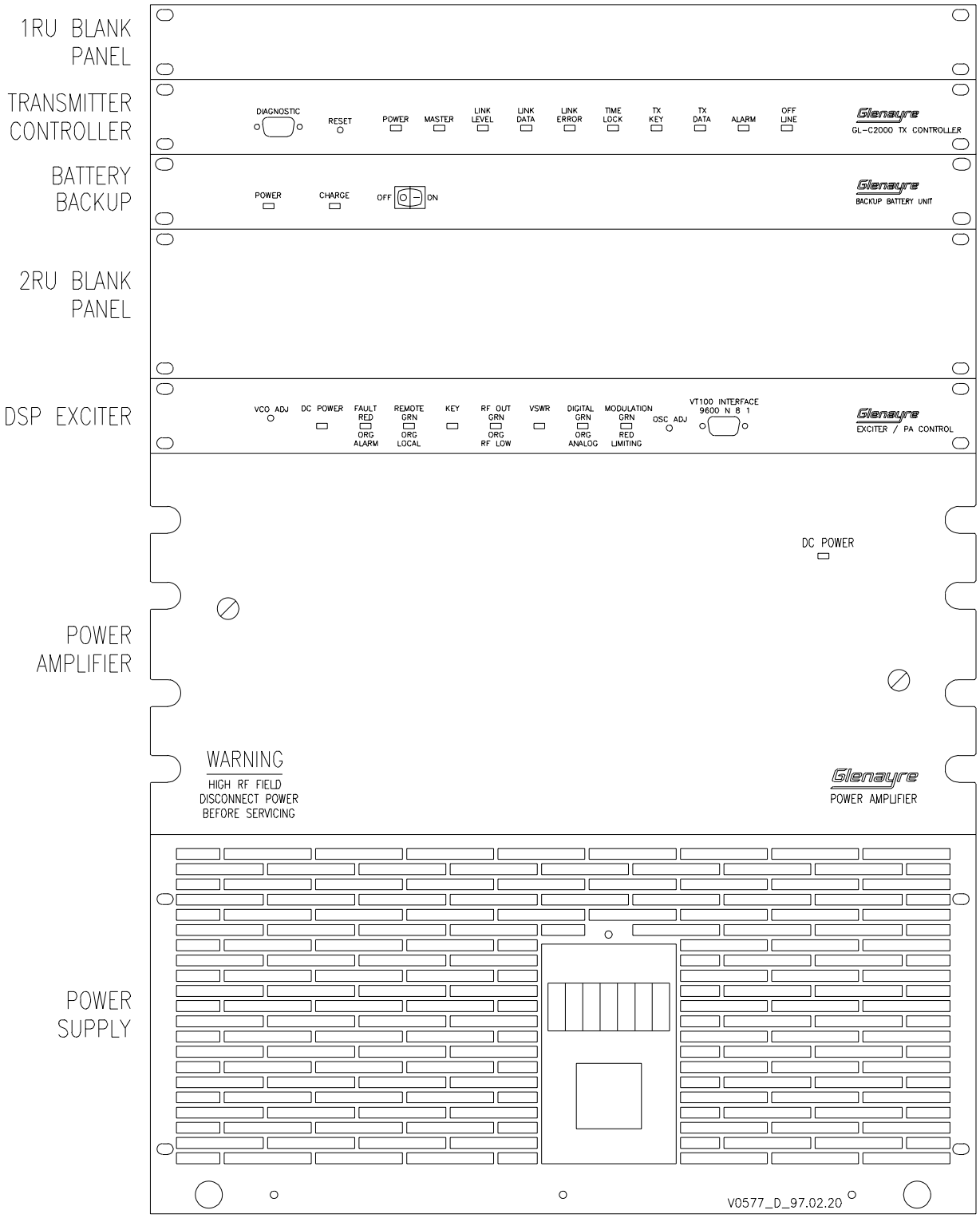

Figure 3-5 GL-T8500 Rackup (w/C2000)

Copyright © 1998 Glenayre

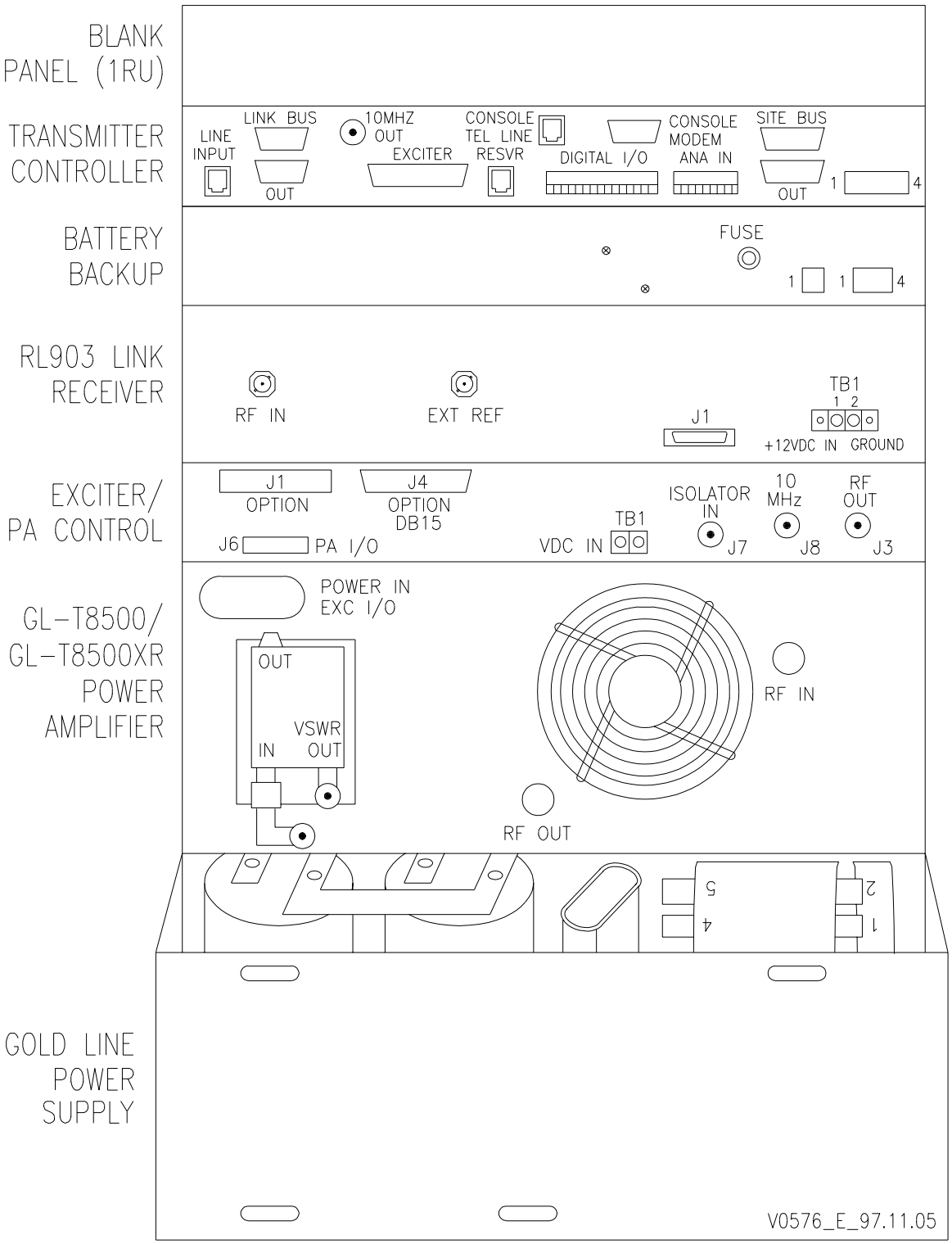

Figure 3-6 GL-T8500 Transmitter Back View (w/C2000)

Copyright © 1998 Glenayre

sec_3

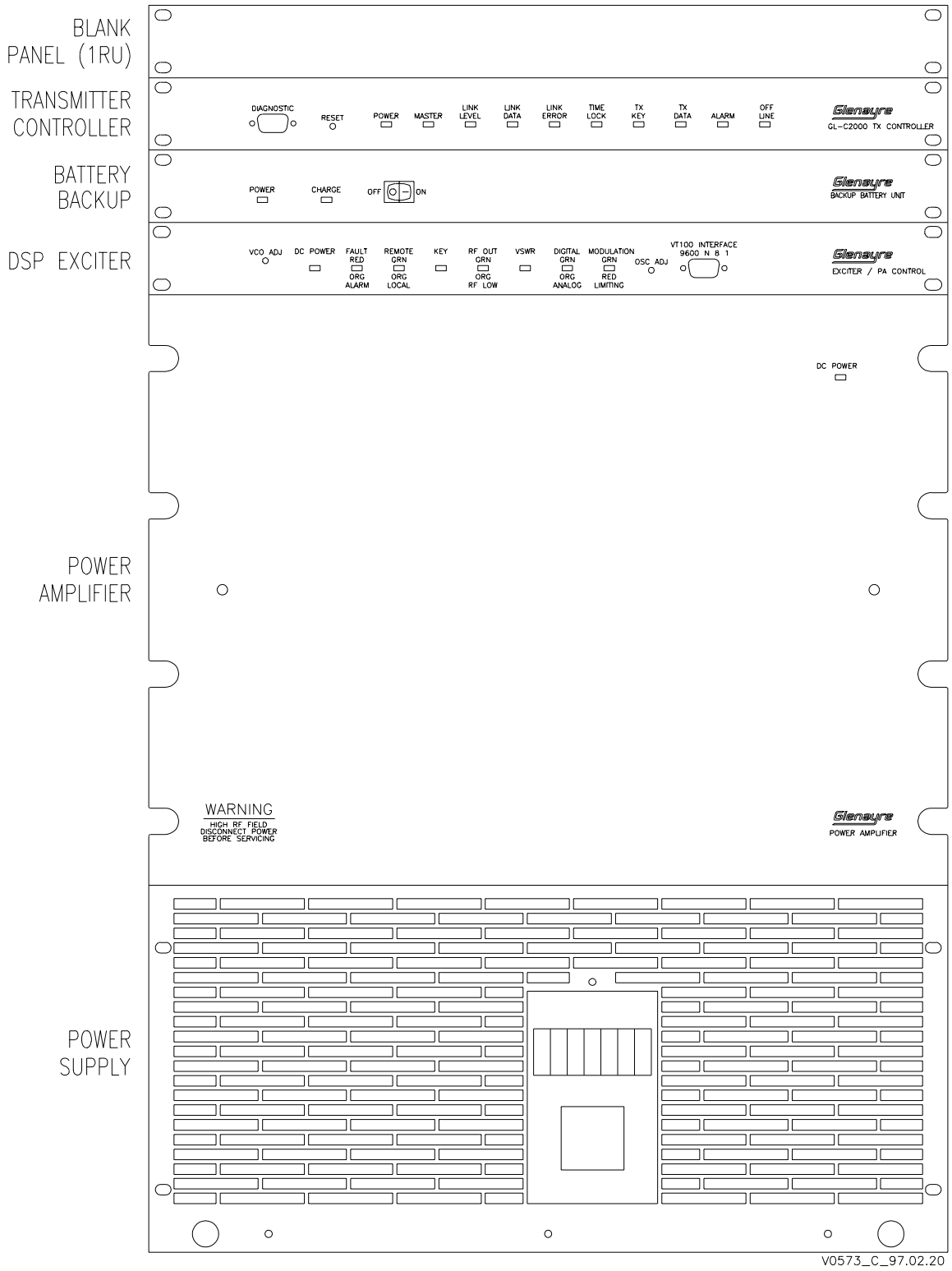

Figure 3-7 GL-T8600 Rackup (w/C2000)

Copyright © 1998 Glenayre

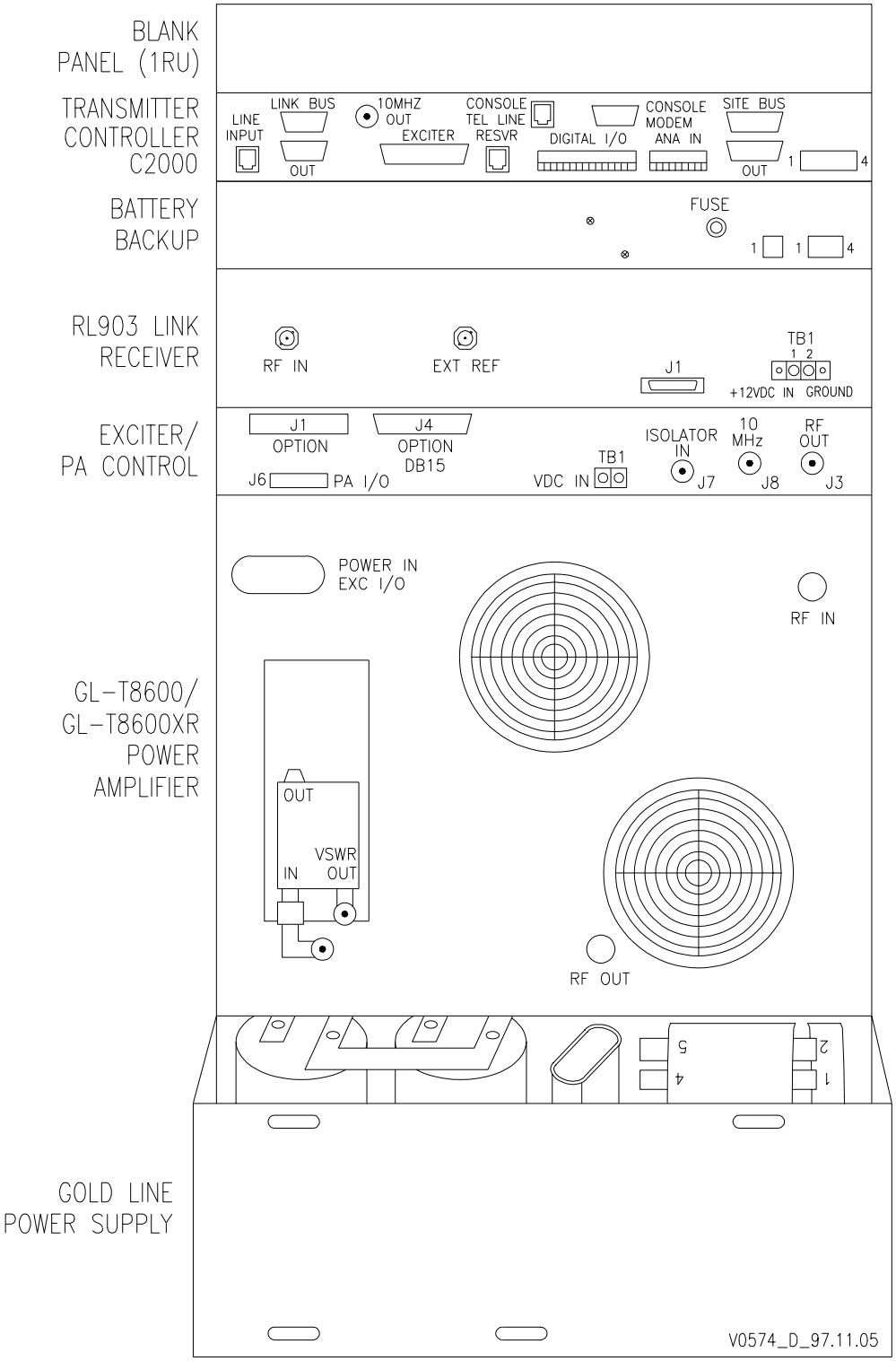

Figure 3-8 GL-T8600 Transmitter Back View (w/C2000)

Copyright © 1998 Glenayre

sec_3

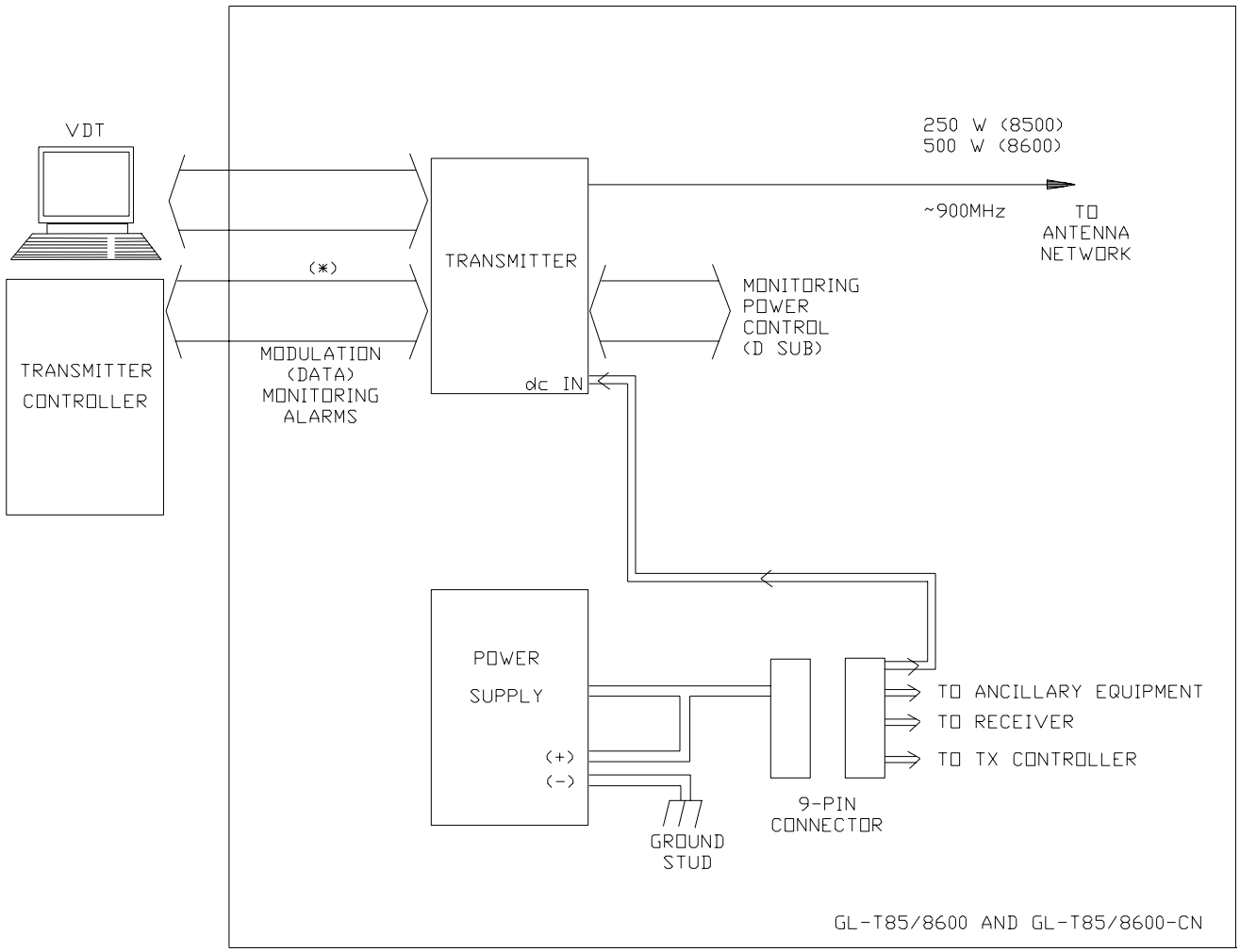

Figure 3-9 GL-T8500/8600 and GL-T8500/8600-CN Simplified Block Diagrams

Copyright © 1998 Glenayre

Copyright © 1998 Glenayre

sec_4

4 INSTALLATION AND SETUP

4.1 Installation

Refer to *Figure 4-1*, for general information.

4.1.1 Tools and Equipment Required

Refer to *Table 4-1*. Equipment listed by brand name may be substituted with equivalent. For installation, only common hand tools are necessary if at all, since installation is usually completed at the factory.

Table 4-1 Required Tools and Equipment

nut driver - 5/16”
screw driver - # 3 flat blade
screw driver - #3 Phillips
Bird 4421 RF power meter
Bird 8327 dummy load
barrel connector - type-N
cable - 1 M long (max) with type-N ends
Fluke 77 DVM

4.1.2 Rack Positioning

Rackup variations are generally not possible. Cooling and cabling restraints require that equipment pieces remain racked as shown. Detailed descriptions of equipment mounting and installation procedures are given in the various equipment user manuals.

During normal operation the equipment rack can be placed with its back or top close to another object since it ventilates through the front and sides. However, to gain reasonable access to the front or back for maintenance purposes, 30 inches of free space should be allowed. For ventilation, the front of the rack should have at least ten inches of free space, and seven inches should be allowed for each side. The cabinet should be placed as close as possible to the transmitting antenna, and to the primary power source as a secondary consideration.

Caution

Never place the rack where moisture, steam, condensation, or standing water, can come in contact with it. The host room may need to be air conditioned or additionally ventilated to remove excess heat generated by this equipment.

Copyright © 1998 Glenayre

4.1.3 Rack Grounding

The rack cabinet must be connected to a reliable earth ground. Connect the earth ground point to the ground stud provided in the bottom of the cabinet; use four gauge or larger copper conductor.

4.1.4 Inspection

Inspect the equipment to be certain that the equipment rack is complete. Compare items received to the packing list. Report shipping loss or damage to carrier within 15 days of receipt. Remove any packing material from the rack and check each assembly. Pay particular attention to the power supply; check it closely and remove any foreign material in the chassis. Be certain to disconnect primary power from the power supply before removing any equipment covers.

4.1.5 Primary Power Requirements

The primary power source must be capable of delivering adequate power to the equipment. Refer to Table 4-2. This equipment operates with 60 Hz ac unless the power supply has the 50 Hz option or the dc only option installed. Refer to section 2 of this manual for current and voltage specifications. Electrical connections made to this equipment must be made in accordance with local electrical codes.

Table 4-2 Power Requirements

input type	transmitter	power required	wire size
ac 50/60 Hz	GL-T8500	2200 W max	12 gauge
ac 50/60 Hz	GL-T8600	3740 W max	12 gauge
dc only	GL-T8500	2000 W max	0 gauge
dc only	GL-T8600	3540 W max	0 gauge

4.1.5.1 Special Considerations

Various options for the G/L power supply permit operation at different line frequencies and voltages. The supplied connector allows for these variations. If the supplied connector is not used, be certain that the correct combination of line frequency and voltage is applied.

The G/L power supply causes a large inrush of current when first turned on. The ac supply breaker must be able to handle this brief surge.

Copyright © 1998 Glenayre

sec_4

4.1.6 Equipment Cabling

4.1.6.1 Ac Connections

The ac input cable comes fitted with a three-pronged ac connector. A grommeted hole in the cabinet is recommended for cable throughput. A three-terminal connector block is mounted inside the air plenum; the power supply input cable is also connected here. The ac input is fused at CB1 on the front of the power supply. All ac connections internal to the rack are made at the factory and should not need to be modified.

4.1.6.2 Dc Connections

Refer to *Figure 4-2* and *Figure 4-4* for more information. This figure shows a GL-T8600 transmitter; connections are the same for the GL-T8500 transmitter.

4.1.6.3 I/O Connections

Refer to *Figure 4-3* and *Figure 4-5* for more information. This figure shows a GL-T8600 transmitter; connections are the same for the GL-T8500 transmitter.

4.1.7 Dc Only Sites

Some installation do not use ac input power. Usually it is racked and wired at the factory, but it can be retrofitted. Be sure to connect as shown in the dc only power supply user manual.

4.1.8 System Connectors

Refer to Table 4-3. This table lists connectors by equipment unit. Connections made to equipment outside the cabinet are also described below.

To the isolator, connect the transmit antenna coax cable to OUT. Some installations may also include a lightning protection device between the isolator and antenna. The connector is typically a type-N and should be securely tightened.

To the receiver (if used), connect the receive antenna coax cable at RF IN. The connector is typically type-N and should be securely tightened. Some installations include a lightning protection device between the receiver and antenna.

If used, connect the telephone wireline to the TXC at MODEM IN. Modem specifications are given in the TXC user manual.

Copyright © 1998 Glenayre

Note: In the table below, the > symbol is short for “is connected to”.

Table 4-3 Equipment Connectors

equipment	connector	destination
TXC	J1	>exc J1:
	J2	>exc J2:
	J3	not used
	J4	> VDT:
	J5	> exc J8:
	J8/9	> telephone land line:
RX	rf in	> antenna:
	ext ref	>
	J1	> exc J5 (interface I/O bd):
PA	exc io	> exc J6:
	rf in	> exc J3:
	rf out	> isolator in:
	vswr out	> exc J7:
	iso out	> antenna:
EXC		connectors listed above not repeated under EXC
	J4	> interface i/o bd:
	TB2	> (see exc IB):
	VT100	> VDT:

4.2 Setup

4.2.1 Introduction

This subsection contains setup procedures for the Gold Line transmitter with a TXC. These procedures are usually performed only once, when the transmitter is initially installed at the site. This procedure presumes that the equipment has already been factory configured for the correct RF band, transmitter controller, and oscillator. Refer to the VDT user manual for more information on these and other procedures.

4.2.2 Setup Procedures

The procedure is divided into separate areas for activation, password setup, channel setup, digital mode setup, analog mode setup, forward power setup, oscillator calibration, and preoperational check. Perform each in the order shown. Setup procedures include the following:

Copyright © 1998 Glenayre

- equipment power-up
- starting VDT software
- password setup
- channel setup
- forward power setup
- preoperational checks
- paging check

4.2.2.1 Equipment Power-Up

Operating power for racked equipment is regulated by the power supply in the bottom of the rack. Operating power for the VDT is independent of the power supply.

Transmitter power-up is accomplished by setting the breaker switch on the supply front to the up position. Also, on the receiver, set front panel switch to on position.VDT power-up is accomplished by setting the its power switch to the on position. Be sure VDT is properly connected to primary power.

4.2.2.2 Starting VDT Software (QT-1000 only)

Once the VDT is powered, one of two programs must be running to facilitate communications with site hardware. This procedure presumes that the proper programs are already loaded into the computer console. The VDT interacts with the G/L transmitter when the ‘VT-100’ console program runs. The VDT interacts with the QT-1000 controller (TXC) when the ‘DOS’ console program runs.

Starting the VT-100 console is accomplished by performing the steps in the list below.

- Type 'cd procomm' and enter it.
- Type 'procomm' and enter it.
- As instructed by the VDT, press a key to begin.
- Enter ‘local’ control mode to prevent any remote control interference.

The VT-100 program should now be running. For detailed instructions on operating this program software, refer to the VDT user manual.

Starting DOS console is accomplished by performing steps in list below.

- Type 'cd console' and enter it.
- Type 'console' and enter it.
- As instructed by the VDT, press a key to begin.
- If necessary, type 'quintron' and enter it at the password query.
- Enter ‘local’ control mode to prevent any remote control interference.

The QT-1000 console program should now be running. For detailed instructions on operating this program software, refer to the TXC user manual.

Copyright © 1998 Glenayre

4.2.2.3 Password Setup

To prevent unauthorized tampering, change both frequency and entry passwords. An entry password should be used in both VT-100 and DOS console programs.

Initiating a password in the DOS console program is accomplished by performing the steps in the list below.

- Start the DOS console program. (see above).
- Enter ‘console setup’ menu.
- Enter ‘edit passwords’ submenu.

For more details, refer to manual 9110.00028.

Initializing a password in the VT-100 console program is accomplished by performing the steps in the list below.

- Start the VT-100 console program. (see above).
- When the password query appears, enter ‘abcd’.
- Enter ‘local’ main menu..
- Enter ‘change tx settings’ menu item..
- Enter ‘change frequency password’ submenu. OR
- Enter ‘change / toggle entry password’ submenu.

The VT-100 VDT uses two passwords to provide a higher level of security for entry into the transmitter channel frequency change area. For more details, refer to the VT-100 user manual.

4.2.2.4 Channel Setup

On site channel setup is not required if the transmitter was configured at the factory. Generally all transmitters are setup at the factory. This procedure presumes that the transmitter status has already been checked and the procedure needs to be performed.

Channel setup (frequency settings) is accomplished by performing the steps in the list below.

- Start the VT-100 console program. (see above).
- Enter ‘local’ main menu.
- Enter ‘change tx settings’ menu item.
- Enter ‘set frequencies’ submenu. This requires password entry.
- Follow screen prompts as given.

For more details, refer to the VT-100 screen displays manual.

Copyright © 1998 Glenayre

4.2.2.5 Forward Power Setup

The forward power setup procedures are necessary for all transmitter installations. Procedures include: forward power calibration, forward power adjustment, and alarm level setting. Before starting, select mode and channel in which the transmitter is to operate.

Forward power calibration is accomplished by performing the ‘forward power calibration procedure’ given in the MAINTENANCE section of this manual. Refer to that section for details. Since most transmitters have already been calibrated at the factory and should not be recalibrated, check calibration status by performing the steps listed below.

- Start the VT-100 console program. (see above).
- Enter ‘local’ main menu.
- Enter ‘view tx status’.
- Enter ‘view faults selection’ submenu. If ‘fwd calib’ is OK, do not do forward power calibration. If a fault exists, do procedure as described above.

Follow screen prompts as shown.

Forward power adjustment is accomplished by performing the steps in the list below.

- Start the VT-100 console program. (see above).
- Enter ‘local’ main menu.
- Enter ‘change tx settings’.
- Enter ‘adj fwd pwr’ submenu.

Follow screen prompts as shown.

Set power output level to rated transmitter output unless diminished coverage area is desired.

Alarm level setting is accomplished by performing the steps in the list below.

- Start the VT-100 console program. (see above).
- Enter ‘local’ main menu.
- Enter ‘change tx settings’.
- Enter ‘set low pwr alarm’ submenu.

Follow screen prompts as shown.

4.2.2.6 Preoperational Checks

These checks should be performed before the transmitter is put into paging service.

Transmitter check is accomplished by performing the steps in the list below.

- Start the VT-100 console program. (see above).
- Enter ‘local’ main menu.
- Enter ‘view tx status’.

Copyright © 1998 Glenayre

- Enter ‘view faults selection’ submenu.
- Key transmitter; verify that no faults exist.

Follow screen prompts as shown.

Exciter LED check is accomplished by performing the ‘exciter LED self-test’; refer to VDT user manual. Verify that all conditions are OK.

4.2.2.7 Paging Check

Paging check is accomplished by performing the steps in the list below. This check should be performed using at least three pagers. Pagers should be tuned to every on-frequency and every adjacent frequency.

- Start the VT-100 console program. (see above).
- Enter ‘remote’ main menu.
- Set transmitter mode and channel as required.
- Send page and verify appropriate pager response; repeat for each operating frequency.
- Send page and verify that adjacent channel pagers do not respond; repeat for each adjacent frequency.

The transmitter setup procedures are completed. Refer to the VDT user manual for more information on checkout procedures.

Copyright © 1998 Glenayre

sec_4

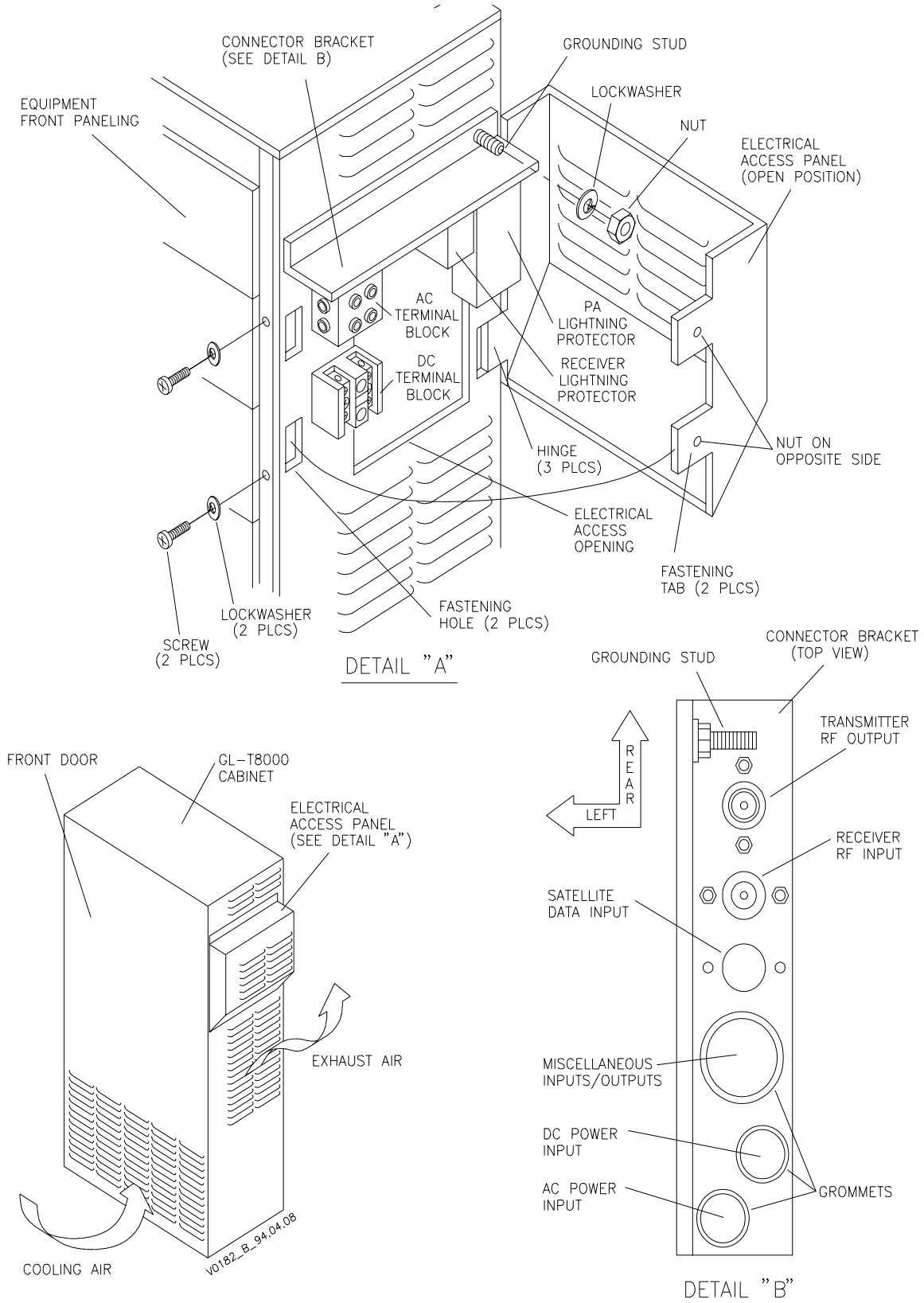

Figure 4-1 Site Installation Diagram

Copyright © 1998 Glenayre

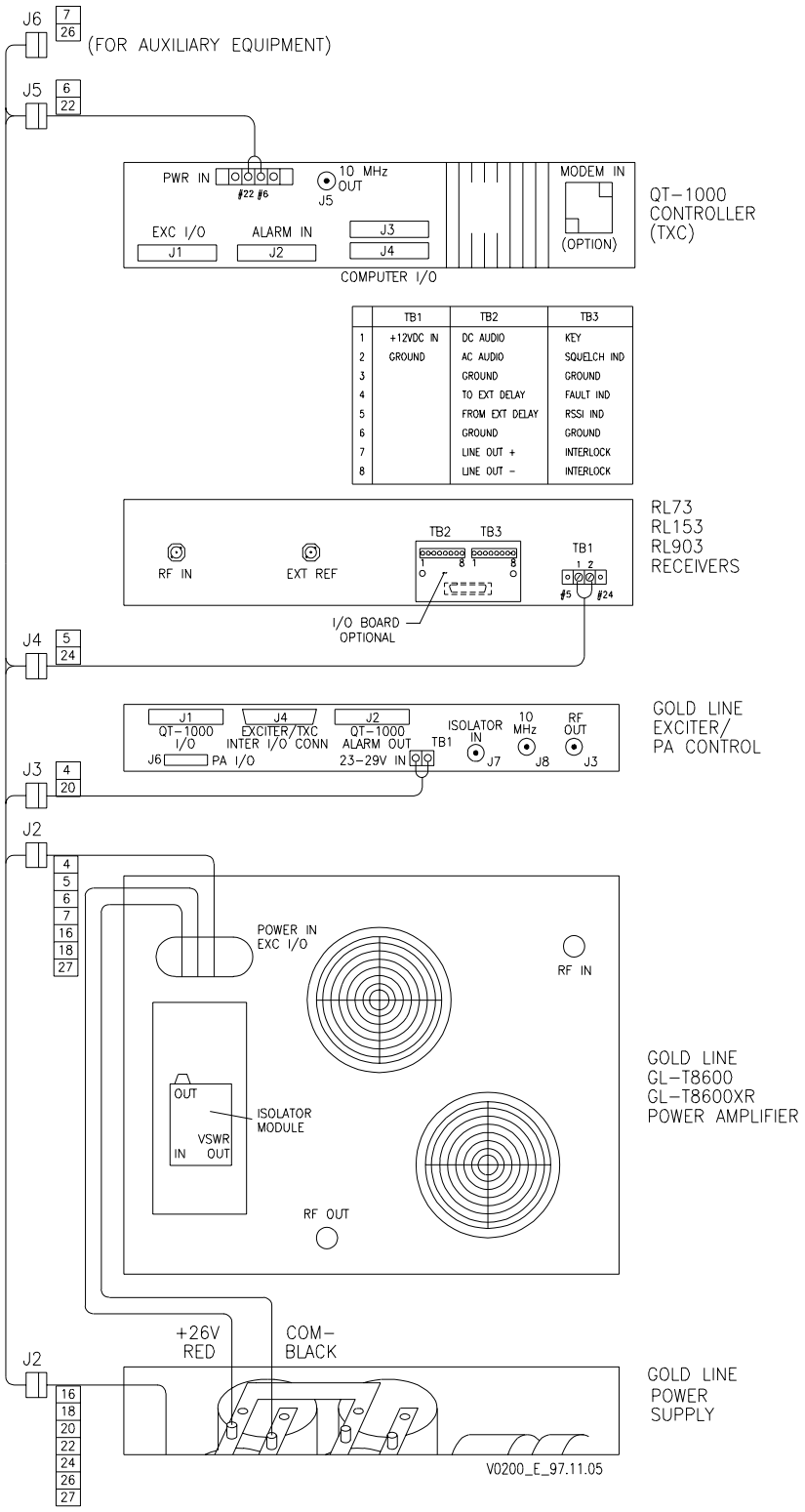

Figure 4-2 Site Dc Connection Diagram (w/QT-1000)

Copyright © 1998 Glenayre

sec_4

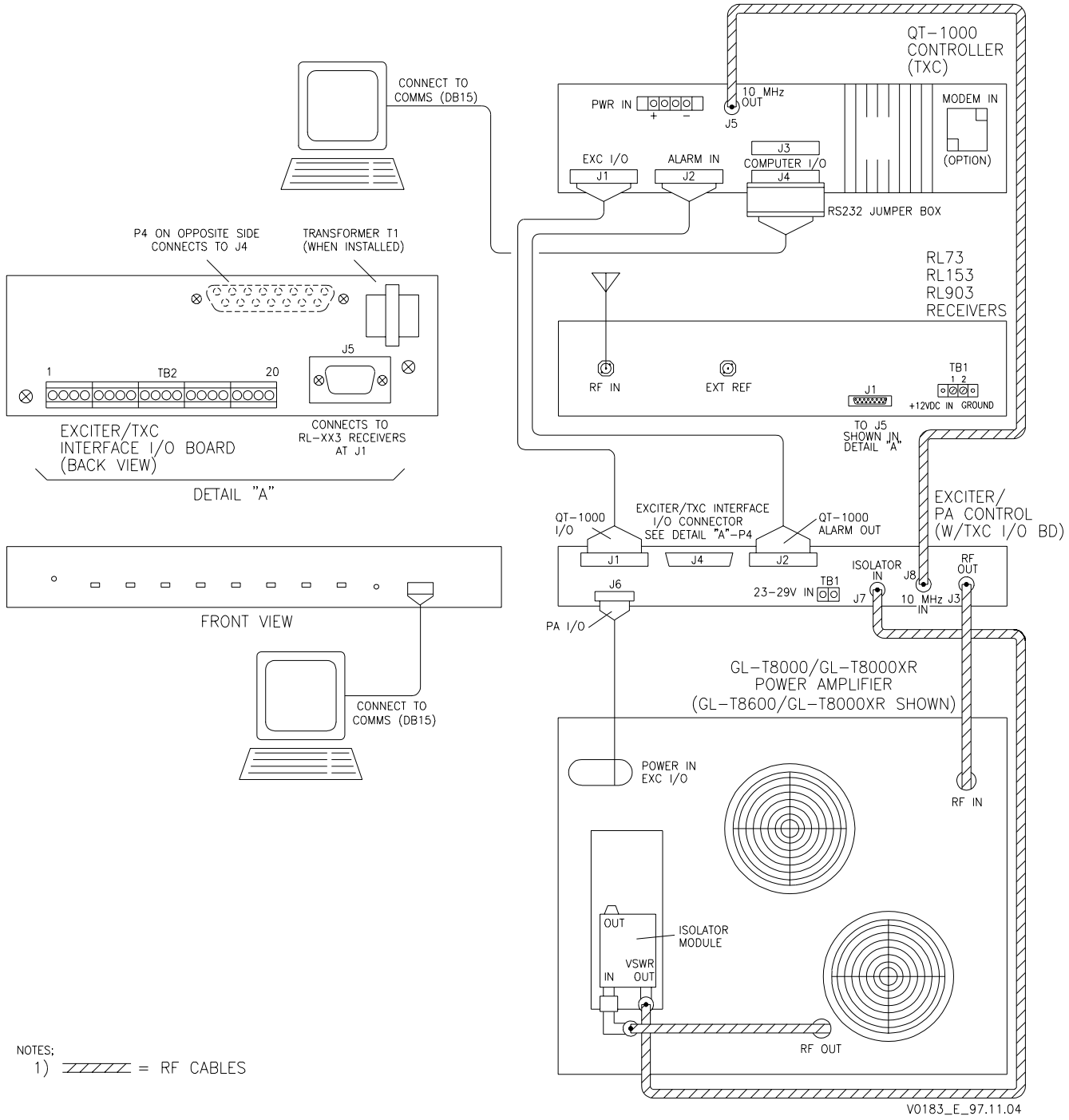

Figure 4-3 Site Interconnect Diagram (w/QT-1000)

Copyright © 1998 Glenayre

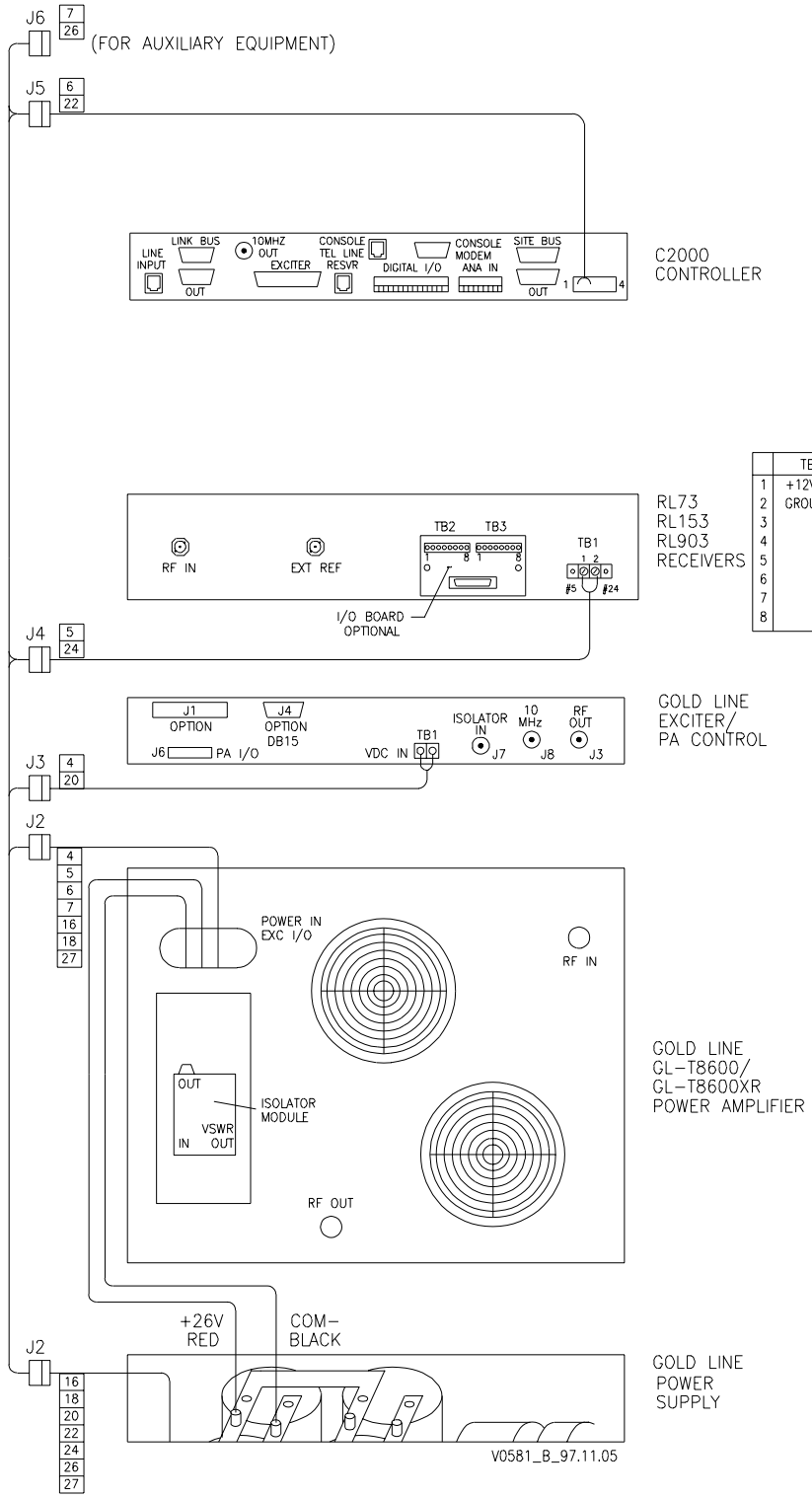

	TB1	TB2	TB3
1	+12VDC IN	DC AUDIO	KEY
2	GROUND	AC AUDIO	SQUELCH IND
3		GROUND	GROUND
4		TO EXT DELAY	FAULT IND
5		FROM EXT DELAY	RSSI IND
6		GROUND	GROUND
7		LINE OUT +	INTERLOCK
8		LINE OUT –	INTERLOCK

Figure 4-4 Site Dc Connection Diagram (w/C2000)

Copyright © 1998 Glenayre

sec_4

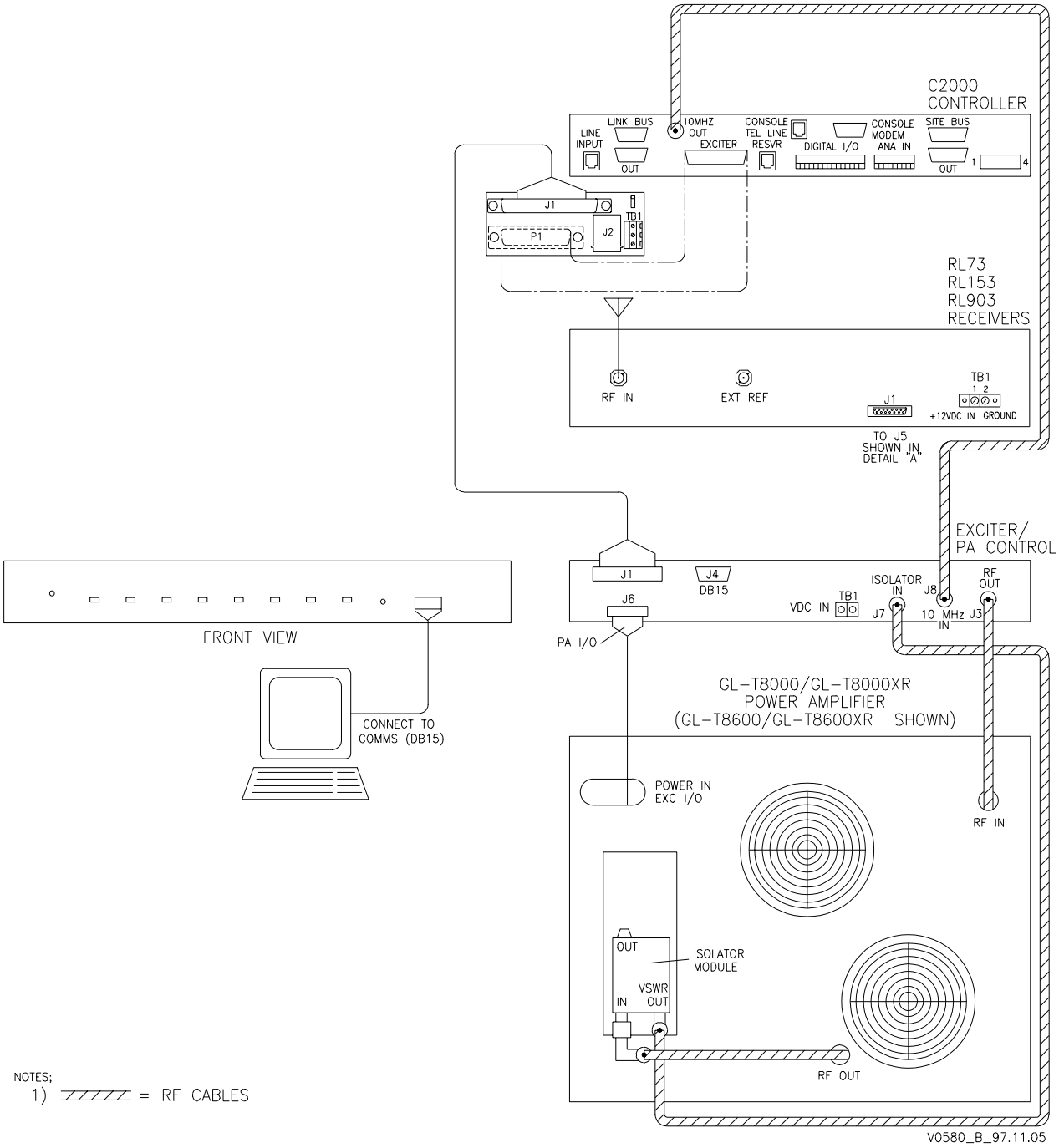

Figure 4-5 Site Interconnect Diagram (w/C2000)

Copyright © 1998 Glenayre

Copyright © 1998 Glenayre

sec_5

5 OPERATION

5.1 Introduction

Normally this equipment is operated remotely from the paging terminal. When the transmitter is in the local operating mode. Only very limited operation can be done with front-panel controls. Front panels controls and indicators are presented below. Refer to the individual equipment user manuals for more detailed information.

5.1.1 Precautions and Hazards

WARNING

It is unsafe and counterproductive to operate this equipment when covers are removed. Remove ac and dc power before making modifications to any equipment. Avoid the PA if it is keyed and the PA front cover is removed. Do not disconnect any RF connectors while the PA is keyed. During operation, the lower section of the power supply front panel gets very hot; do not touch it.

5.2 Local Operation

The Gold Line transmitter is operated using the video display terminal (VDT), which runs a DEC VT-100 emulating program e.g., ProComm. Refer to the VDT user manual for more information about local operation using the VDT.

5.3 Front Panels Controls and Indicators

5.3.1 Exciter/PA Control Unit

The front panel contains the controls and indicators listed below.

- VCO ADJ - potentiometer adjusts VCO frequency fine tuning
- DC POWER - LED either not lighted or lights green; green is normal
- FAULT/ALARM - LED lights red or orange; neither is normal
- REMOTE/LOCAL - LED lights green or orange; green is normal
- KEY - LED either not lighted or lights green; either can be normal
- RF OUT/RF LOW - LED lights green or orange; green is normal
- VSWR - LED either not lighted or lights red; not lighted is normal
- DIGITAL/ANALOG - LED lights green or orange; either is normal
- MODULATION/LIMITING - LED lights green or red; green is normal

Copyright © 1998 Glenayre

5.3.2 Power Amplifier (PA)

The power amplifier has no controls; the only front panel indicator is listed below.

- DC POWER - not lighted or lighted green; green is normal

5.3.3 Power Supply

The power supply has one control and several fuses listed below.

- no stencil - circuit breaker switch for primary power to power supply
- +13.5V 5A - fuse for 13.5 volt supply to PA metering board
- FAN1 3A - fuse for PA cooling fan one
- FAN2 3A - fuse for PA cooling fan two (GL-T8600 PA only)
- EXC 5A - fuse for exciter/PA control unit
- CNTL 5A - fuse for transmitter controller
- RX 3A - fuse for link receiver
- AUX 3A - fuse for other auxiliary equipment

5.3.4 Transmitter Controller

The front panel contains one control and the indicators listed below.

- STATUS - LED blinks green or is not lighted; blinking is normal
- FAULT - LED lights red or is not lighted; not lighted is normal
- KEY - LED lights green momentarily or is not lighted; either is normal
- CNTL/REF - LED lights green or orange momentarily; either is OK
- DISABLE - LED lights red momentarily; not lighted is normal
- LINE SEIZE - LED lights orange momentarily; refer to user manual
- ALARM ACTIVE - LED lights red; not lighted is normal
- AUXOUT ACTIVE - LED lights orange; refer to user manual
- RESET - switch resets the transmitter controller

5.3.5 Link Receiver

The front panel contains the controls and indicators listed below.

- no stencil - off/on switch controls power to unit
- VOLUME - adjusts monitor speaker volume
- POWER - LED is normally lighted
- NORMAL/TEST/TIGHT - switch that sets receiver squelch mode
- NORMAL - LED lights when receiver squelch in normal
- TIGHT - LED lights when receiver squelch set to tight

Copyright © 1998 Glenayre

- LINE OUT - adjustment for line out level
- OK/HI - LED lights green or red to show line out level; green is normal
- KEY/DIS/REMOTE - switch sets receiver key mode; remote is normal
- KEY LINE - LED is lighted when transmitter is keyed
- FAULT - LED lights red for VCO fault; not lighted is normal

5.4 Front-Panel Operations

The following subparagraphs present operations that are accomplished using front-panel controls. Since this is a computer-controlled transmitter, only the operations listed below are possible without the VDT.

- resetting transmitter controller
- receiver power control
- receiver audio monitoring level
- receiver squelch setting
- receiver key options setting

5.4.1 Resetting the Transmitter Controller

To reset the transmitter controller, push the recessed RESET switch. This action re-boots the controller. It is used only when the controller is nonresponsive to system or user commands. Reset can cause a loss or change of site operating parameters. Refer to the transmitter controller user manual for all details.

5.4.2 Receiver Power Control

To apply power to the receiver, set the 1/0 switch to 1; to turn unit off, set switch to 0.

5.4.3 Receiver Audio Monitoring Level

To increase receiver audio monitoring level, turn VOLUME control clockwise. To decrease level, turn it counterclockwise.

5.4.4 Receiver Squelch Setting

To put receiver in squelch mode, set SQUELCH switch to NORMAL. To put unit in carrier squelch mode, set switch to TIGHT. To put unit in open squelch mode, set switch to TEST.

5.4.5 Receiver Key Options Setting

To disable receiver remote keying, set receiver front-panel switch to DIS. To key locally, push switch to KEY. To return receiver to normal service, set switch to REMOTE.

Copyright © 1998 Glenayre

Copyright © 1998 Glenayre

sec_6

6 THEORY OF OPERATION

6.1 Introduction

Refer to Figure 6-1 and *Figure 6-3*. The Gold Line GL-T8500 and GL-T8600 transmitters operate in a larger paging network. This figure shows how the paging transmitter fits into the overall paging network.

The following paragraphs provide a block diagram-level functional description of a typical Gold Line GL-T8500 and GL-T8600 paging sites.

6.2 Simplified Functional Descriptions

6.2.1 Paging Site

Refer to *Figure 6-4*. This figure shows basic signal flows between the various paging site equipment pieces.

6.2.2 Paging Transmitter

The Gold Line paging transmitter converts audio from the receiver or wireline, into modulated and amplified RF. This function is performed in response to commands from the transmitter controller via the exciter/PA control unit. The transmitter monitors its functions and reports its status to the VDT via the exciter/PA control unit. The paging signal is normally supplied via the transmitter controller, which permits the transmitter to be controlled and monitored from a remote location. Local control and monitoring is performed through a VT-100 video display terminal (VDT).

Note

If this equipment is to transmit 4-level or higher FSK data, the data lines (1-4) must not be separated by more than 1.8 microseconds in order to operate properly.

6.2.3 Exciter / PA Control Unit

The exciter / PA control unit combines functions of an RF exciter and a PA controller. The exciter generates modulation using digital signal processing (DSP) to achieve accurate, stable modulation that does not vary with time or temperature. The PA control section monitors transmitter status signals in the form of fault logic and voltage samples. The microprocessor in the exciter reports PA status to the controller, VDT, and the exciter front panel. If a malfunction occurs, the transmitter enters a reduced operating condition depending on the level of the fault. PA control and status monitoring is performed by the microprocessor, which consolidates control logic from the controller or the locally operated VDT. Both the exciter and controller receive continuous status reports from the microprocessor. The exciter is the control and status-monitoring interface between the transmitter and the user.

Copyright © 1998 Glenayre

6.2.4 Power Amplifier

The Gold Line PA performs amplification of the RF signal generated by the exciter. An indicator visible on the front panel lights when the PA is receiving operating power. The PA amplifies a nominal 0.25-watt signal to 250 or 500 watts for application to the antenna system. Monitoring circuitry is on the metering board in the PA chassis. PA functions include those listed below.

- overheat sensing
- over-current protection
- general fault detection
- output level monitoring
- input level monitoring

6.2.5 Power Supply

The standard Gold Line power supply takes ac input, converts it, rectifies and filters it, and supplies dc output to all racked equipment. Each dc circuit is individually fused on the front of the supply. A circuit breaker on the front of the supply doubles as a transmitter power on/off switch.

6.2.6 Link Receiver

The link receiver monitors specific RF channels for data, command, and control information and forwards it to the paging site equipment. The receiver is used in place of a telephone wireline to link the paging site equipment to the paging network.

6.2.7 Video Display Terminal

The VDT, though not part of the transmitter, is required for setup, local control, and local monitoring of the transmitter. The VDT can be any laptop or desktop terminal with a VT-100 type program. The VDT interfaces the transmitter through the connector on the front of the exciter. The Gold Line transmitter VDT software is menu driven.

6.3 Site Signal Flows

6.3.1 Site RF Signal Flow

The on-frequency carrier is created by the VCO circuitry in the exciter / PA control unit. It is then modulated with paging information, amplified, and sent to the PA via connector J3 on the back of the exciter / PA control unit. Through coaxial cable, the carrier goes to the back of the PA where it is further amplified to a preset level. The amplified carrier is cabled from the PA output to the input of the isolator where it is cleaned up and sent to the antenna system. Note that some installations have a ten MHz reference signal cabled from the controller to connector J8 on the back of the exciter / PA control unit.

Copyright © 1998 Glenayre

6.3.2 Site Audio Signal Flow

The audio signal arrives at the site either through a link receiver or by wireline. The signal can be either analog or digital and is first routed through the transmitter controller. The controller checks for and responds to appropriate embedded commands. Paging information is supplied to the exciter. The exciter modulates this signal using digital signal processing, then up-converts this modulated signal to final RF. This modulated RF from the exciter is supplied to the PA, which amplifies the signal to the RF output level. This modulated, amplified RF from the PA is supplied to an antenna for transmission. An audio-monitoring speaker is available on the RL-903 receiver.

6.3.3 Site Control Signal Flow

Gold Line transmitter paging site control is done two ways: remotely (normal operation), and locally. In either case, the paging site broadcasts when the transmitter controller commands the transmitter, via the Gold Line exciter / PA control unit, to key and transmit.

Control functions are shared by the transmitter controller and the G/L exciter / PA control unit, which controls the power amplifier. The exciter / PA control unit also controls the power amplifier, locally, by responding to commands from the video display terminal (VDT).

Control signals enter and exit the paging site via the transmitter controller, which has overall control of the paging site. The TXC is part of the larger QT-1000 paging control system even though it is racked with paging site equipment. Controller functions include those listed below.

- transmitter alarm gathering
- transmitter alarm dispatching
- simulcast parameter implementation
- remote transmitter operation interface.

Remote control of the paging site is done through commands being sent to the transmitter controller from the external paging control system.

Control commands originating from a remote site are supplied to the exciter through the controlling device. Control and setup commands may be applied to the exciter locally through the VDT. A microprocessor within the exciter interprets each command and responds by performing the appropriate function.

6.3.4 Status Signal Flow

The exciter monitors extensive transmitter status signal in the form of fault logic and voltage samples. The microprocessor within the exciter reports transmitter status to the controlling device, VDT, and the exciter front panel. If a transmitter malfunction occurs, a reduced operating condition is entered depending on the level of the fault.

6.4 Site Signals

Refer to *Figure 6-4* and *Figure 6-5*.

Copyright © 1998 Glenayre

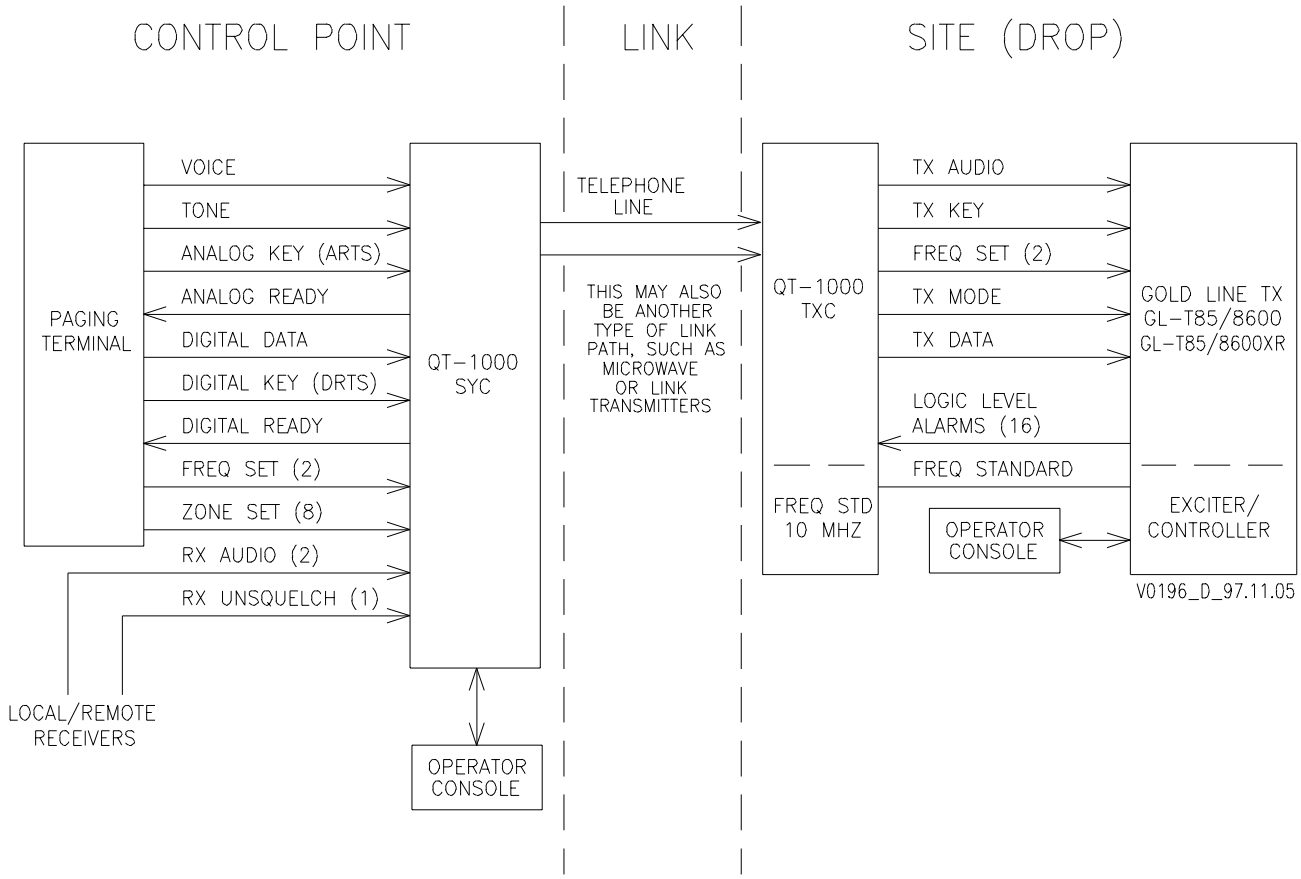

Figure 6-1 Paging Network Signal Diagram (w/QT-1000)

Copyright © 1998 Glenayre

sec_6

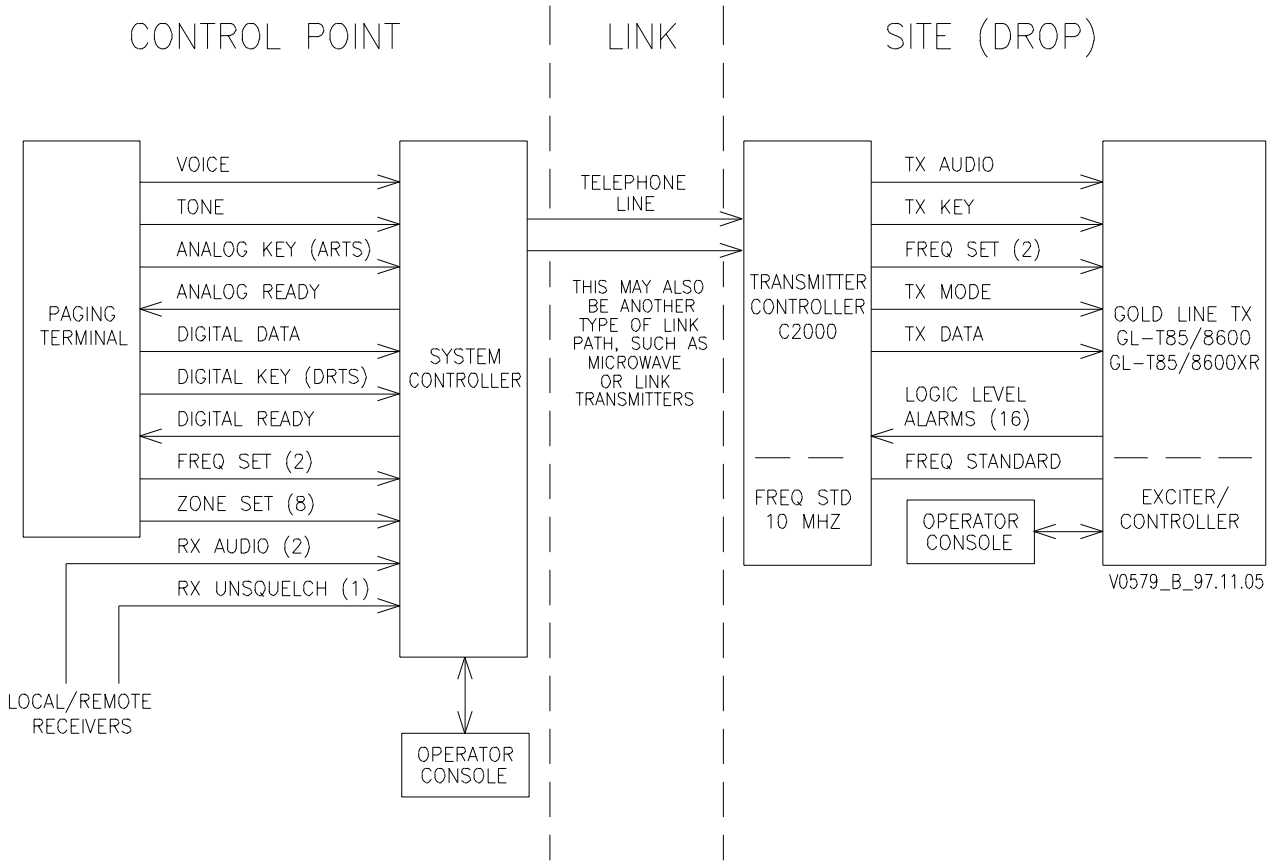

Figure 6-2 Paging Network Signal Diagram (w/C2000)

Copyright © 1998 Glenayre

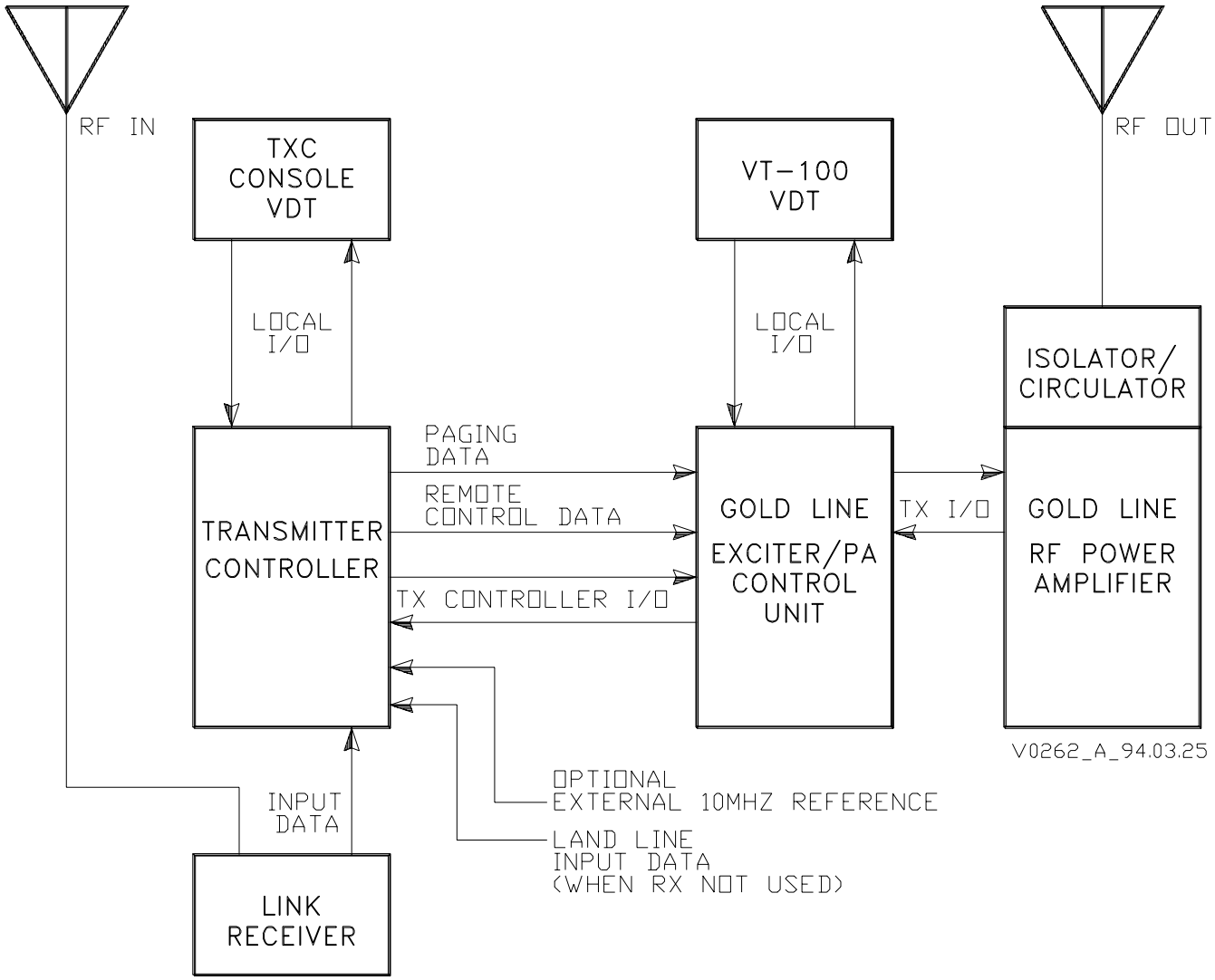

Figure 6-3 Site Signal-Flow Diagram

Reserved

Copyright © 1998 Glenayre

sec_6

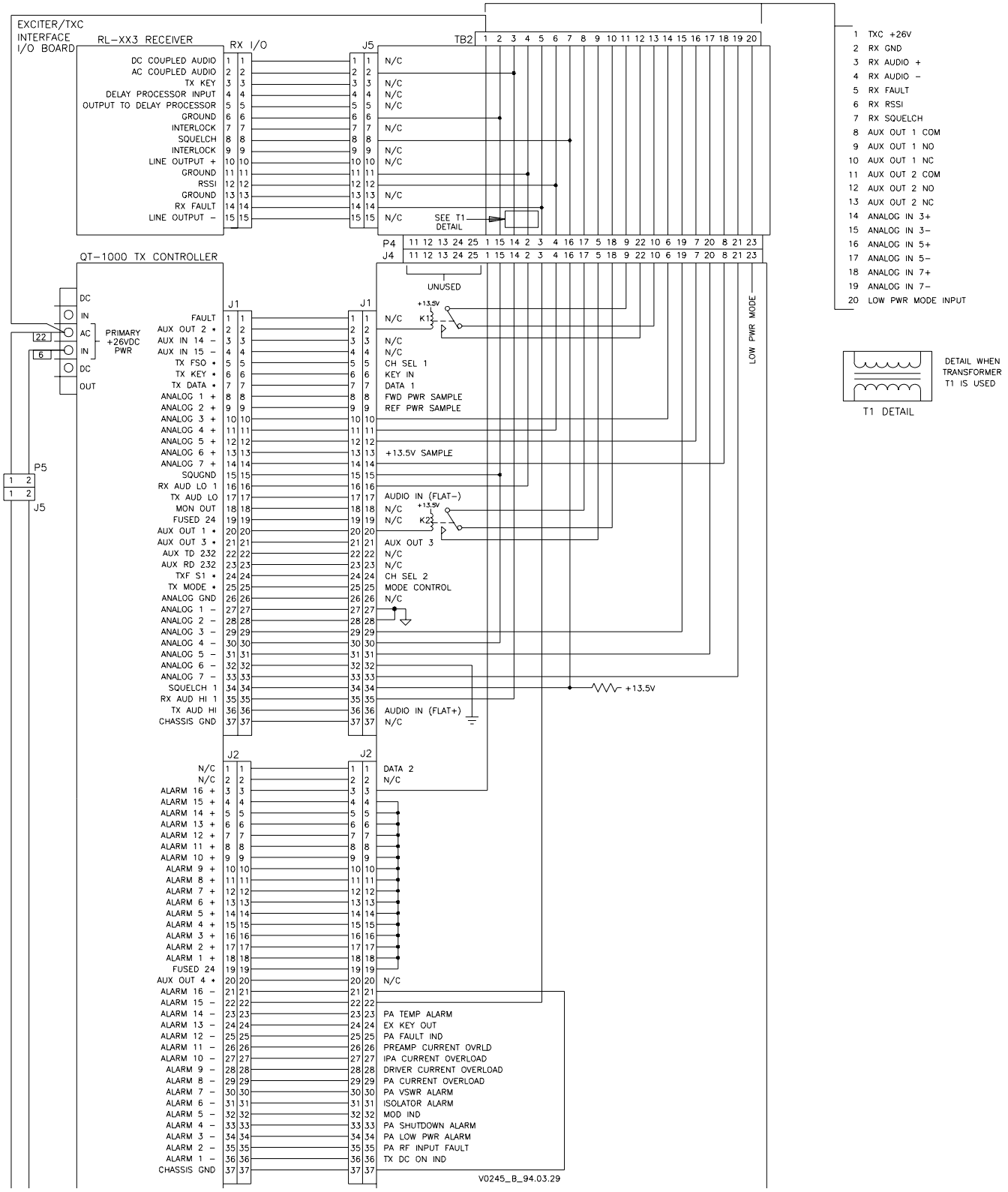

Figure 6-4 Site Signals Diagram (w/QT-1000) (page 1 of 2)

Copyright © 1998 Glenayre

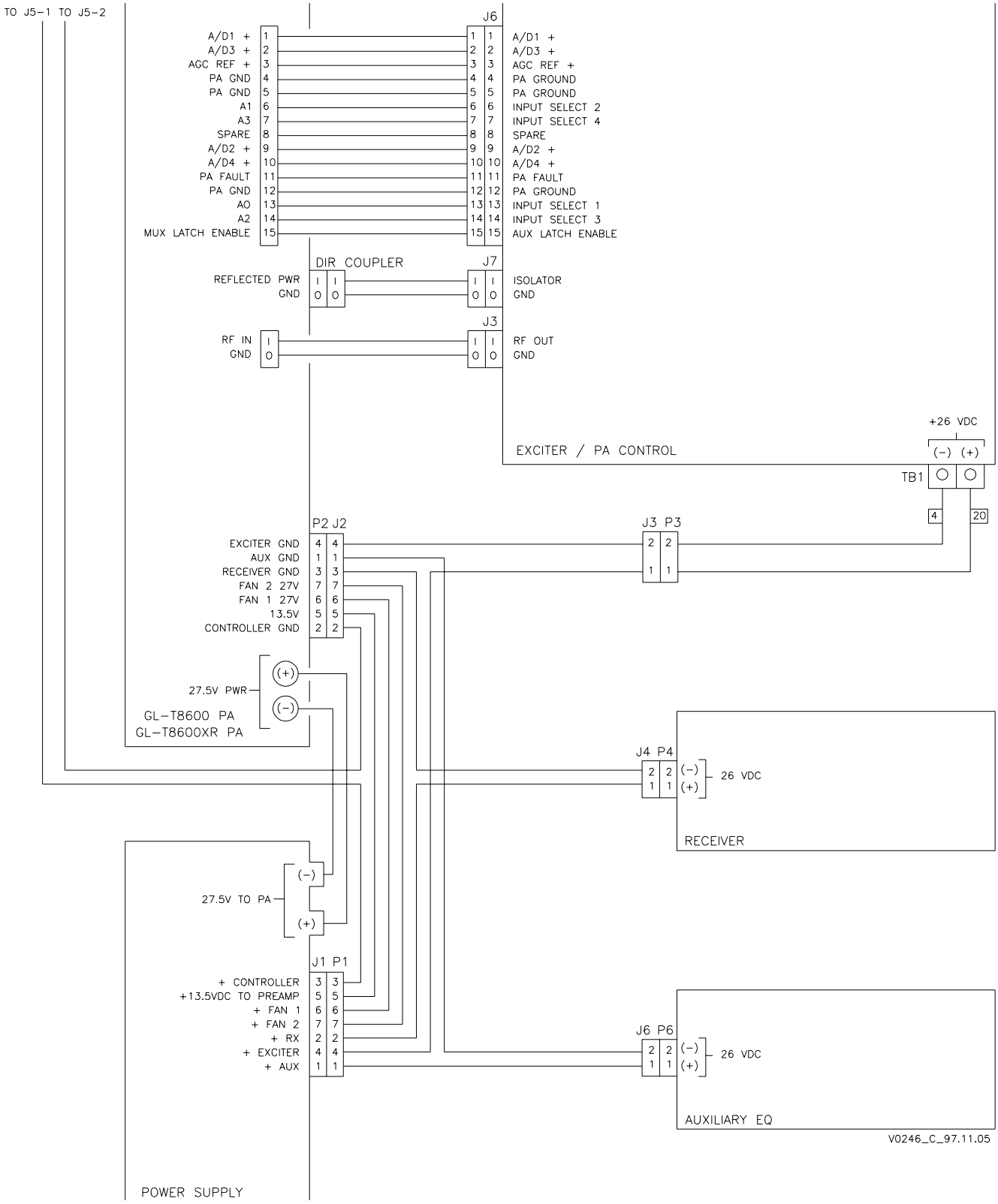

Figure 6-4 Site Signals Diagram (page 2 of 2)

Copyright © 1998 Glenayre

sec_6

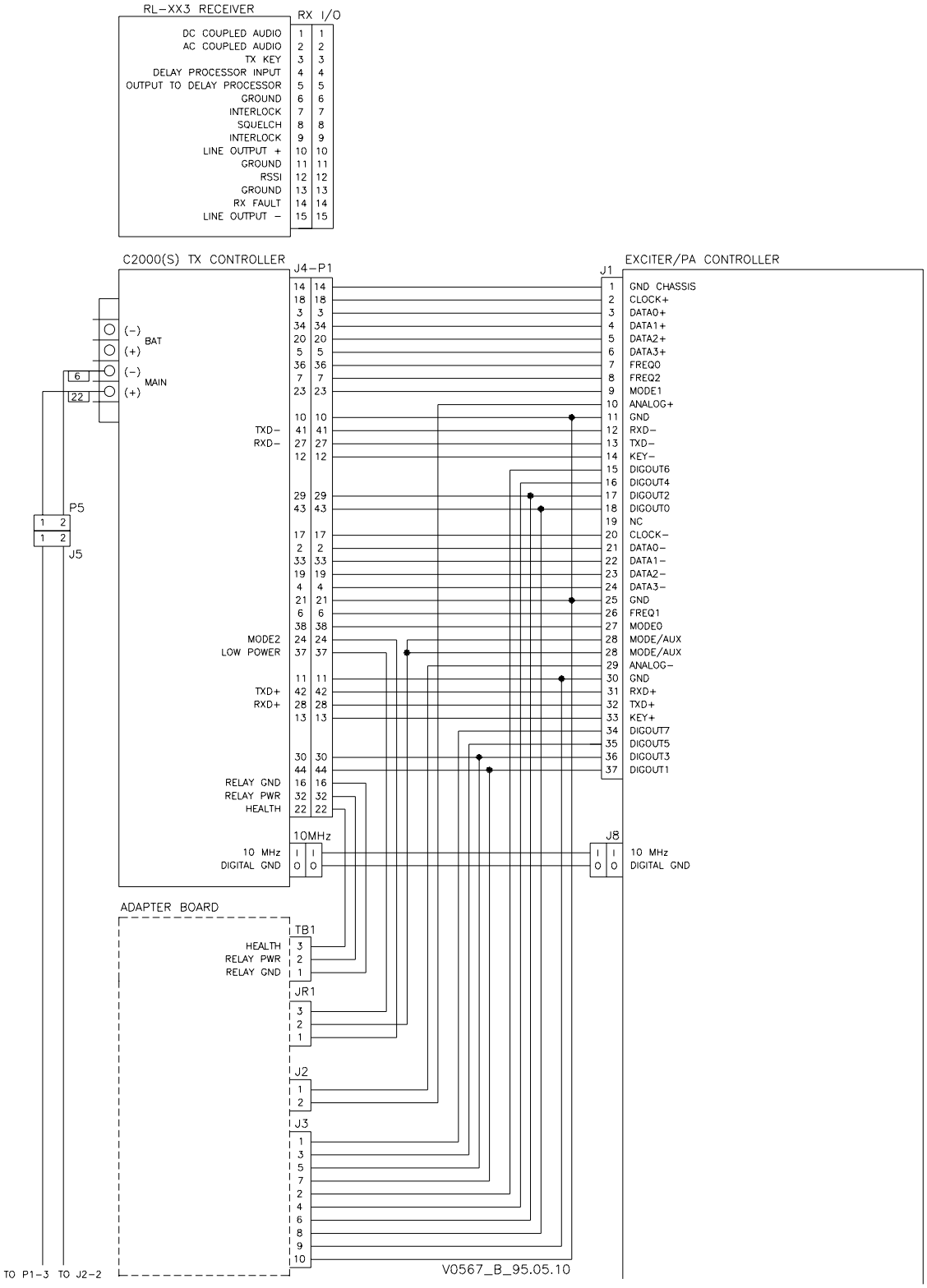

Figure 6-5 Site Signal Diagram (w/C2000) (page 1 of 2)

Copyright © 1998 Glenayre

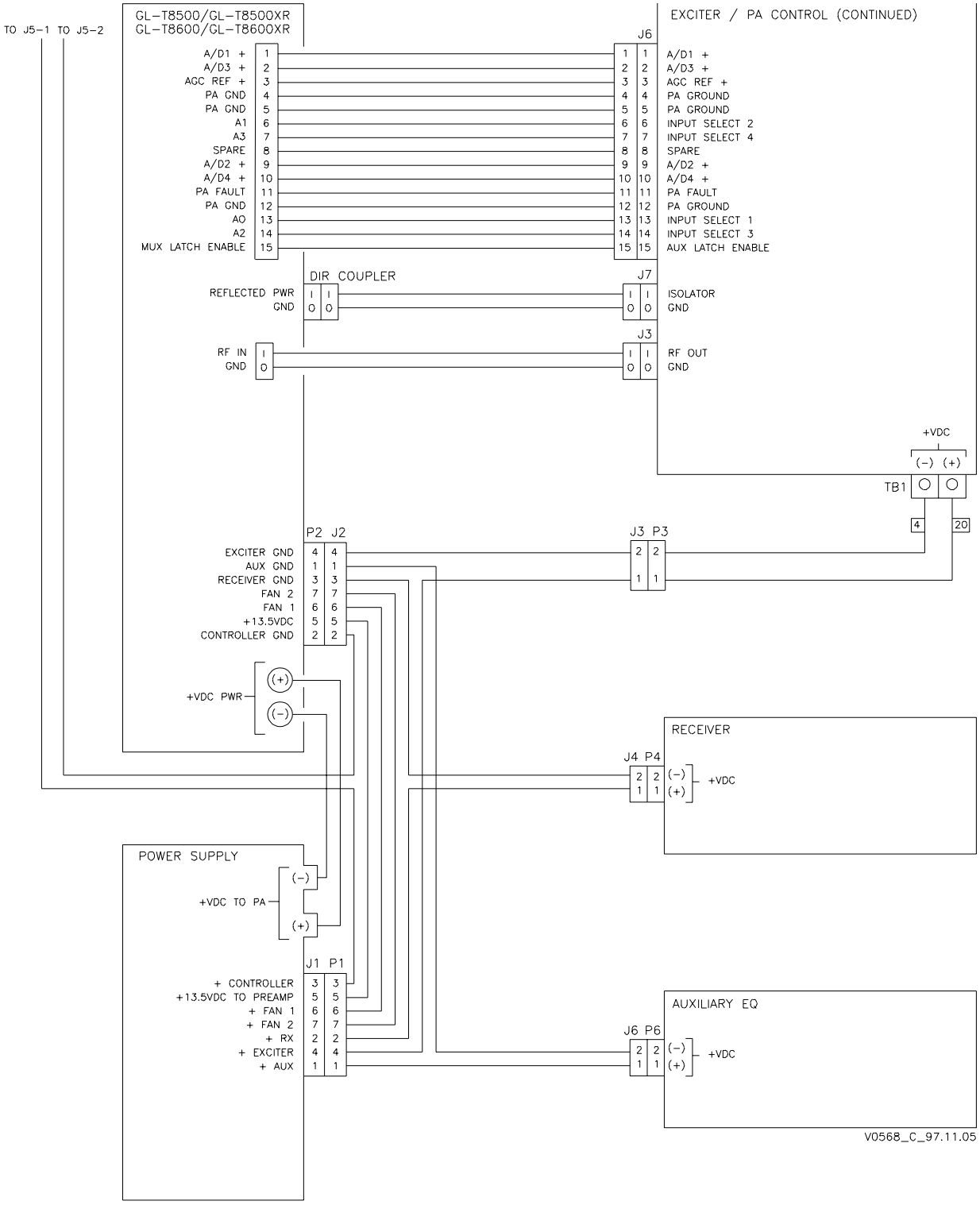

Figure 6-5 Site Signal Diagram (w/C2000) (page 2 of 2)

Copyright © 1998 Glenayre

sec_7

7 MAINTENANCE

7.1 Introduction

Maintenance procedures in this section are listed below.

- power amplifier current check
- dc ripple check

7.2 Maintenance Procedures

7.2.1 PA Current Check

Once per year the power amplifier device currents should be compared to the levels listed on the data sheet that accompanied the transmitter. Be sure that the operating RF output is the same as listed on the data sheet.

- put transmitter in local mode
- key transmitter
- monitor power amplifier currents on VDT
- make comparison between data sheet and monitor

Monitored currents should not vary more than ten percent from data sheet levels. An exception is when original components or modules have been replaced or modified.

7.2.2 Dc Ripple Check

Once per year the dc supply current should be checked for excessive ripple. Maximum allowable ripple is given in section two of this manual. The supply should be under normal operating load for this procedure.

- put transmitter in local mode
- key transmitter
- connect oscilloscope between ground and supply output
- set oscilloscope to read ripple

The observed ripple level should be less than the specification given in section two of this manual.

Copyright © 1998 Glenayre

7.2.3 Audio Level Check (QT-1000 only)

Once per year audio level through the TXC should be checked. To identify components, it may be necessary to refer to Figure 9-1 in TXC User Manual 9110.0029.

- put transmitter in local mode
- command SYC to send test tone to TXC
- remove to cover of TXC
- observe that LED 9 (yel) not lit; LED 10 (grn) should be lit

The procedure to properly set this audio level is given in section four of this manual.

7.2.4 VDT Maintenance

Other procedures are available through VDT connection to the exciter/PA control unit. VDT user manual description is given in section one of this manual.

Copyright © 1998 Glenayre

sec_8

8 CHECKOUT AND TROUBLESHOOTING

8.1 Introduction

Checkout procedures can be performed at any time to verify that the transmitter and related paging site equipment is functioning properly. After the checkout procedures are successfully completed, the site can be returned to normal service. Any troubleshooting procedure provided or referenced, which is a direct result of a failed checkout procedure, should be pursued before trying to complete the checkout procedure.

The following procedures presume that the setup procedures in section four of this manual have already been successfully completed. Refer to the VDT user manual for more checkout procedures.

8.2 Checkout Procedures

8.2.1 Dc Voltage Verification

Once powered, verify that equipment is powered. Check list below.

- on G/L PA front panel, DC POWER indicator is on
- on G/L exciter front panel, DC POWER indicator is on
- on TXC front panel, STATUS indicator blinks at 1 Hz rate (QT-1000 only)
- on receiver, POWER indicator is on

8.2.2 VDT Power-up Verification

Once powered, verify that the VDT is powered. Check list below.

- the VDT should have a cursor displayed and blinking or
- the VDT should have an instructional prompt displayed or
- the VDT should have an auto-loaded program running

8.2.3 Cooling Fans Check

Once powered, verify that the fans are operating.

8.3 Troubleshooting Procedures

Refer to the VDT user manual for troubleshooting procedures.

Copyright © 1998 Glenayre

Copyright © 1998 Glenayre

sec_9

9 REMOVAL AND REINSTALLATION

9.1 Introduction

All of the Gold Line site equipment is accessed from the front of the rack to remove or install individual equipment pieces.

9.2 Required Tools

Site equipment can be removed and installed using only common hand tools.

9.3 Removal

Equipment removal is performed on a piece by piece method. Disconnect all connecting cables and wires before removing the equipment. Refer to the individual equipment manuals for details.

9.4 Reinstallation

Equipment reinstallation is performed on a piece by piece method. Connect all cables and wires after installing the equipment. Refer to the individual equipment manuals for details.

Copyright © 1998 Glenayre

Copyright © 1998 Glenayre