Gold Line Power Supplies

USER MANUAL
PN 9110.00159 (old part number=916-8500-003)
REV D
RELEASED

Specifications subject to change without notice

Copyright © 1996 Glenayre

All rights reserved. No part of this work may be reproduced or copied in any form or by any means—graphic, electronic, or mechanical, including photocopying, recording, taping, or information-retrieval system—without written permission of Glenayre.

Document Change Record

Revision:	B
Date:	06/17/95
Changes:	none, original
Issue:	C
Date:	08/21/95
Changes:	picture change
Issue:	D
Date:	02/01/96
Changes:	new format

Copyright © 1996 Glenayre

Table of Contents

1 GENERAL 1-1

1.1 Manual Scope 1-1

1.2 Applicable Documents 1-1

1.3 Manual Sections 1-2

2 SPECIFICATIONS 2-1

3 DESCRIPTION 3-1

3.1 Introduction 3-1

3.2 Physical Description 3-1

3.2.1 Mounting Provisions 3-1

3.3 Simplified Description 3-2

4 INSTALLATION AND SETUP 4-1

4.1 Precautions and Hazards 4-1

4.2 Test Equipment and Tools Required 4-1

4.3 Component and Adjustment Locations 4-1

4.4 Installation 4-1

4.4.1 Inspection 4-1

4.4.2 Power Requirement 4-1

4.4.3 Input/Output Connections 4-2

4.4.4 Chassis Removal and Reinstallation 4-3

4.4.5 Ac Voltage Change 4-3

4.4.5.1 Dc Voltage Check 4-4

4.5 Ultimate Disposition 4-4

5 OPERATION 5-1

5.1 Front-Panel Controls and Indicators 5-1

5.2 Operating Instructions 5-1

6 THEORY OF OPERATION 6-1

6.1 Chassis Components 6-1

6.2 Voltage Regulator Assembly 6-1

7 MAINTENANCE 7-1

7.1 Location of Maintenance Procedures 7-1

8 CHECKOUT AND TROUBLESHOOTING 8-1

8.0.1 Test Equipment and Tools Required 8-1

8.0.2 Precautions 8-1

8.0.3 Resonator Capacitor Check 8-1

8.0.4 Transformer Check 8-1

Copyright © 1996 Glenayre

8.0.5 Diode Check 8-1

9 REMOVAL AND REINSTALLATION 9-1

9.1 Precautions and Hazards 9-1

9.2 Test Equipment and Tools Required 9-1

9.3 Ac Voltage Change 9-1

9.4 Component Locations 9-1

9.5 Chassis Removal and Reinstallation 9-1

9.5.1 Removing Chassis from Rack 9-2

9.5.2 Reinstalling Power Supply into Rack 9-2

9.6 Removing and Reinstalling the 13.5-Volt Regulator 9-2

9.6.1 Removing 13.5-Volt Regulator 9-3

9.6.2 Reinstalling 13.5-Volt Regulator 9-3

10 OPTION 10-1

Copyright © 1996 Glenayre

List of Figures

Figure 3-1 Front View of Gold Line 50A Power Supply 3-3
Figure 3-2 Top View of Gold Line 50A Power Supply 3-4
Figure 3-3 Front View of Gold Line 90-A Power Supply 3-5
Figure 3-4 Top View of Gold Line 90-A Power Supply 3-6
Figure 4-1 Ac Jumpering 100 Vac Nominal 4-5
Figure 4-2 Ac Jumpering 115 Vac Nominal 4-6
Figure 4-3 Ac Jumpering 200 Vac Nominal 4-7
Figure 4-4 Ac Jumpering 230 Vac Nominal 4-8
Figure 5-1 Gold Line Power Supply Front-Panel Controls and Indicators 5-2
Figure 6-1 50A Power Supply Functional Diagram 6-2
Figure 6-2 90A Power Supply Functional Diagram 6-3
Figure 6-3 Power Supply 13.5V Regulator Assembly/Functional Diagram 6-4
Figure 7-1 Gold Line 50A Power Supply Assembly 265-0082-012 7-2
Figure 7-2 Gold Line 50A Power Supply Assembly 265-0082-012 7-4
Figure 7-2 Gold Line 90A Power Supply Assembly 265-0082-006 7-5
Figure 9-1 Power Supply Removal and Reinstallation from/into rack 9-4
Figure 9-2 13.5-Volt Regulator Board Removal and Reinstallation 9-5
Figure 10-1 Gold Line 50/90A DC Only Power Supply Assembly 10-1
Figure 10-2 Gold Line 50A DC-Only Power Supply Functional Diagram 10-2
Figure 10-3 Gold Line 90A DC-Only Power Supply Functional Diagram 10-3

Copyright © 1996 Glenayre

Copyright © 1996 Glenayre

List of Tables

Table 1-1 Applicable Documents 1-1
Table 1-2 Manual Contents 1-2
Table 2-1 Gold Line Power Supplies Specifications 2-1
Table 3-1 Gold Line Power Supply Options 3-1
Table 4-1 Input/Output Connections 4-2
Table 4-2 Transformer Connection and Jumpers 4-3

Copyright © 1996 Glenayre

Copyright © 1996 Glenayre

1 GENERAL

1.1 Manual Scope

This manual is intended for use as part of a paging-transmitter system manual. It contains information concerning the overall operation of the Gold Line 50 and 90-ampere power supplies.

This manual covers the power supplies configured with no options.

1.2 Applicable Documents

Table 1-1, Applicable Documents, lists and briefly describes related part numbers which may be required to document the set of user equipment.

Table 1-1 Applicable Documents

document	part number	description
GL-T8500/8600 VDT manual	9110.00164	describes 250/500-W, 900-MHz Gold Line VDT software with QT-1000 interface
GL-T8500/8600 system manual	9110.00163	describes transmitter equipment and interconnections with QT-1000 control equipment
GL-T8500/8600 exciter / PA control manual	9110.00172	describes exciter and QT-1000 interface
GL-T8500 power amplifier manual	9110.00160	describes 250-W, 900 MHz Gold Line power amplifier
GL-T8600 power amplifier manual	9110.00162	describes 500-W, 900 MHz Gold Line power amplifier
GL-T8500/T8600 power supply manual	9110.00159	this manual

Copyright © 1996 Glenayre

1.3 Manual Sections

Table 1-2, Manual Contents, lists manual sections and their contents. Refer to the table of contents for additional detail.

Table 1-2 Manual Contents

section no. and title	contents
1 General	this section
2 Specifications	list of power supply specifications. Also see specifications in system manual.
3 Descriptions	listing of options and assemblies covered, simplified electrical description, physical description, simplified block theory of operation
4 Installation and Setup	power supply installation, setup, and lists of connections
5 Operation	listing, description, and location of operator controls and indicators
6 Theory of Operation	assembly-level description of power supply operation
7 Maintenance	power supply maintenance (covered in system manual)
8 Checkout and Troubleshooting	power supply checkout and troubleshooting (covered in system manual)
9 Removal and Reinstallation	procedures for removing and reinstalling power supply and power supply assemblies

Copyright © 1996 Glenayre

2 SPECIFICATIONS

Table 2-1 lists specifications. Also refer to the specifications in the system manual.

Table 2-1 Gold Line Power Supplies Specifications

characteristic	condition	specification
ac input voltage (Vac) GL-T8500 transmitter only GL-T8500 and GL-T8600 transmitter	100-volt primary tap	85-115
	115-volt primary tap	98-132
	200-volt primary tap	170-230
	230-volt primary tap	196-264
ac input frequency (Hz)	standard optional	60 50
power consumption (A) GL-T8500 tx only	100-volt or 115-volt primary tap	12-17
GL-T8500 and GL-T8600 transmitter	200-volt or 230-volt primary tap	12-17
power output	25-Vdc outputs	22-28 Vdc at 50 A/90A total, some outputs fused
	13.5-Vdc output	12.8-14.2 Vdc at 5 A, current-limited
weight (approx.)	GL-T8500 GL-T8600	60 lb (27 kg) 70 lb (32 kg)
dimensions	height	8.75 in (22.5 cm)
	depth	9.25 in (23.5 cm)
	width	19 in (48.5 cm)

Copyright © 1996 Glenayre

Copyright © 1996 Glenayre

3 DESCRIPTION

3.1 Introduction

The Gold Line 50-A and 90-A power supplies are part of a radio paging transmitter. The 50-A version is used in the GL-T8500 transmitter; the 90-A version is used in the GL-T8600 transmitter. The supplies provide power to other assemblies within the rack, including cooling fans.

Refer to *Table 3-1* Gold Line Power Supply Options for more information.

Table 3-1 Gold Line Power Supply Options

item	condition	transformer
90 A power supply	60 Hz	6401.00019
90 A power supply	50 Hz	6401.00018
50 A power supply	60 Hz	6401.00020
50 A power supply	50 Hz	6401.00017

3.2 Physical Description

The supply chassis must accommodate more than one type of equipment rack. Accordingly, the assembly may vary slightly for proper cooling and mounting requirements. Weight varies with supply configuration. Also refer to *Table 2-1*. *Figure 3-1, Front View of Gold Line 50-A Power Supply* shows the front of the power supply, and *Figure 3-2, Top View of Gold Line 50A Power Supply* shows a view of the power supply from the top.

3.2.1 Mounting Provisions

The power supply is mounted in a standard 19-inch rack. Some rack cabinets do not have equipment access from the back; others do. The steel supply chassis has no top or sides. The protective front cover attaches to the front rail of the rack cabinet. The chassis is folded on the bottom to allow it to slide between the rack-cabinet floor and two floor-mounted bars. The chassis is held in place with two bolts that attach to the rack cabinet through the lower front edge of the chassis. The supply is mounted at the bottom of the equipment rack in all single-transmitter configurations.

The supply requires little cabinet space. Refer to *Figure 3-1, Front View of Gold Line 50-A Power Supply* for detail. The front panel of five RUs (8.75 in) in height contains a circuit breaker and fuses. *Figure 5-1, Gold Line 50-A Power Supply Front-Panel Controls and Indicators* shows and describes their functions.

Copyright © 1996 Glenayre

3.3 Simplified Description

Ac power flows to power transformer T1; circuit breaker CB1 provides protection against excess current. The rectified and filtered 25-volt output is supplied to other transmitter assemblies. The 25-volt output also goes, via fuse F1, to the 13.5-volt regulator board, which provides 13.5 volts for use by the transmitter.

Copyright © 1996 Glenayre

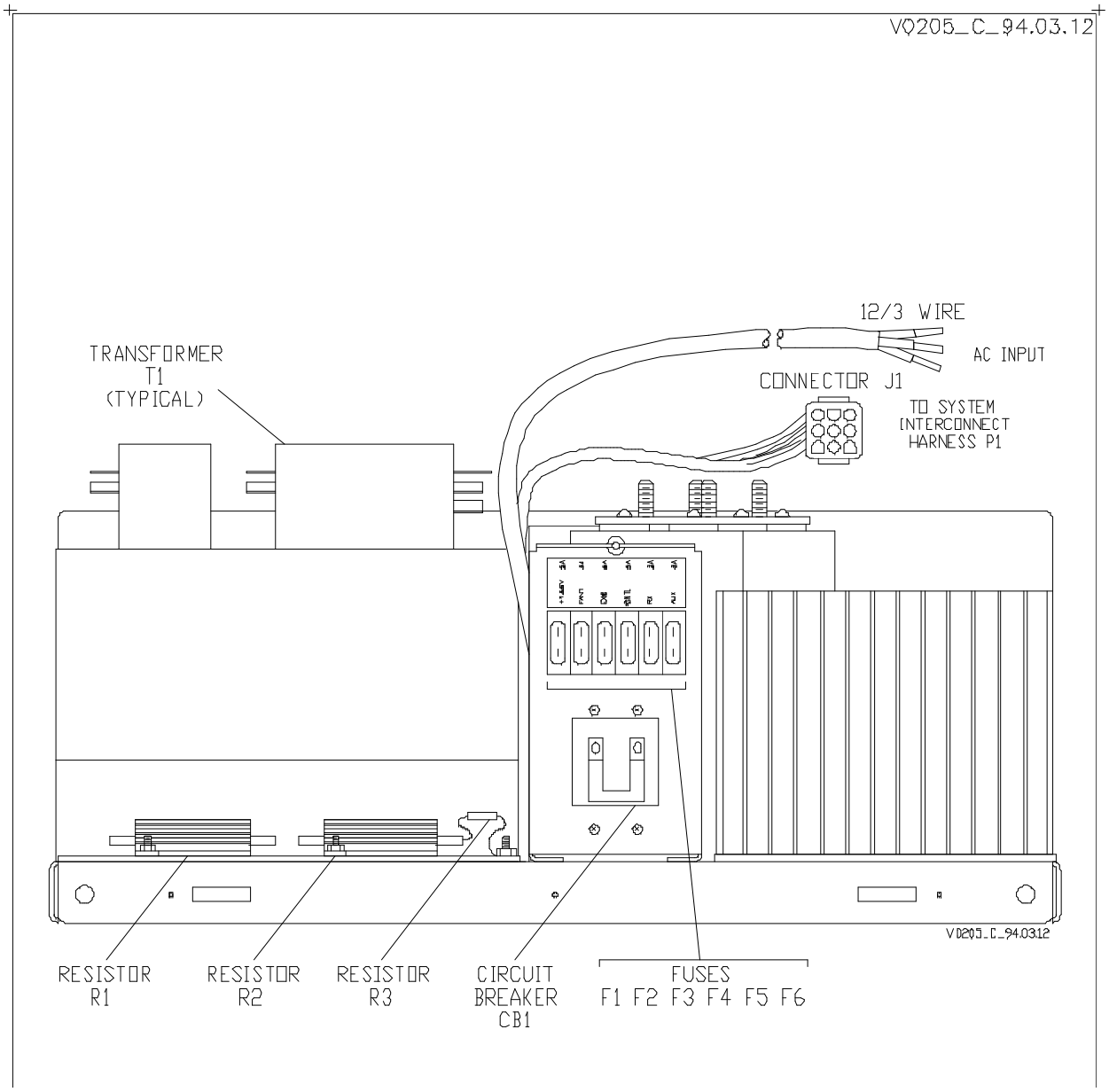

Figure 3-1 Front View of Gold Line 50-A Power Supply

Copyright © 1996 Glenayre

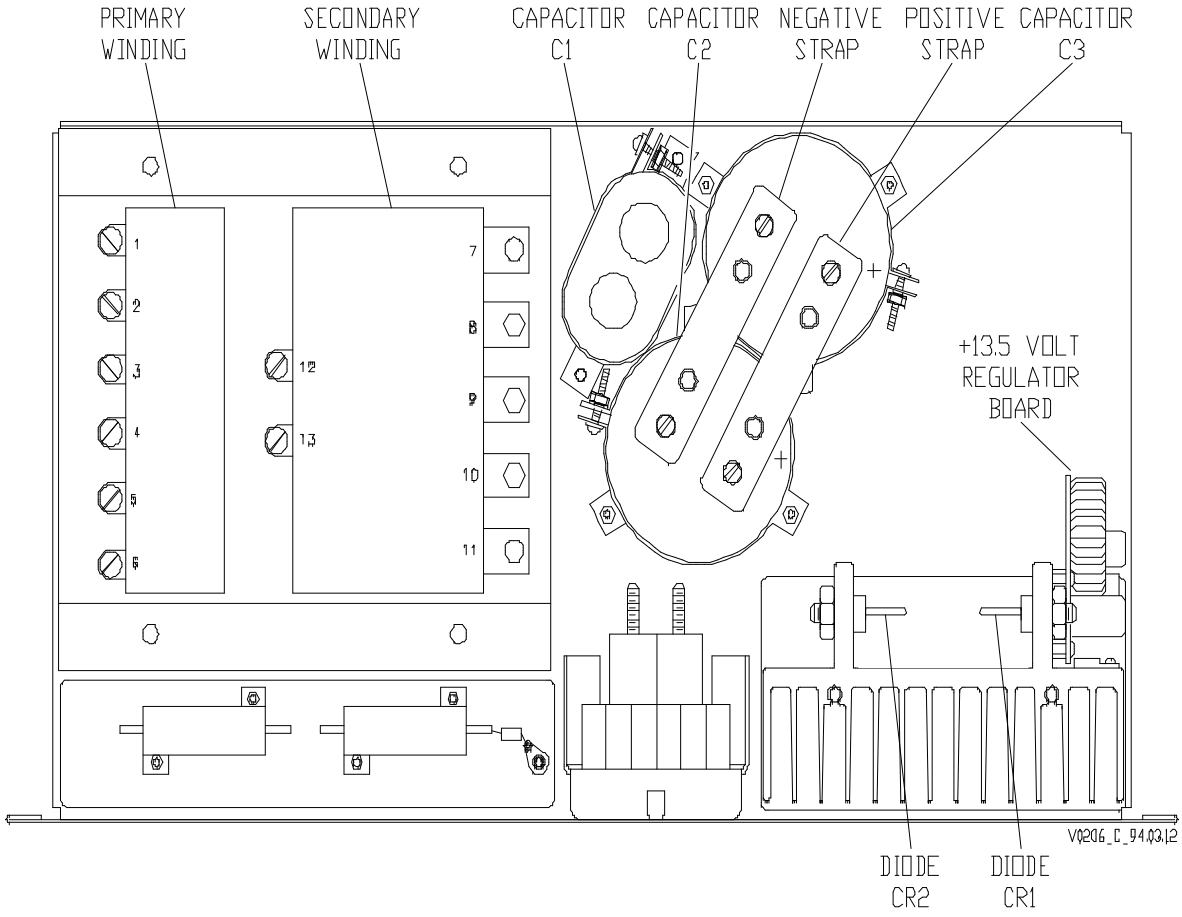

Figure 3-2 Top View of Gold Line 50A Power Supply

Copyright © 1996 Glenayre

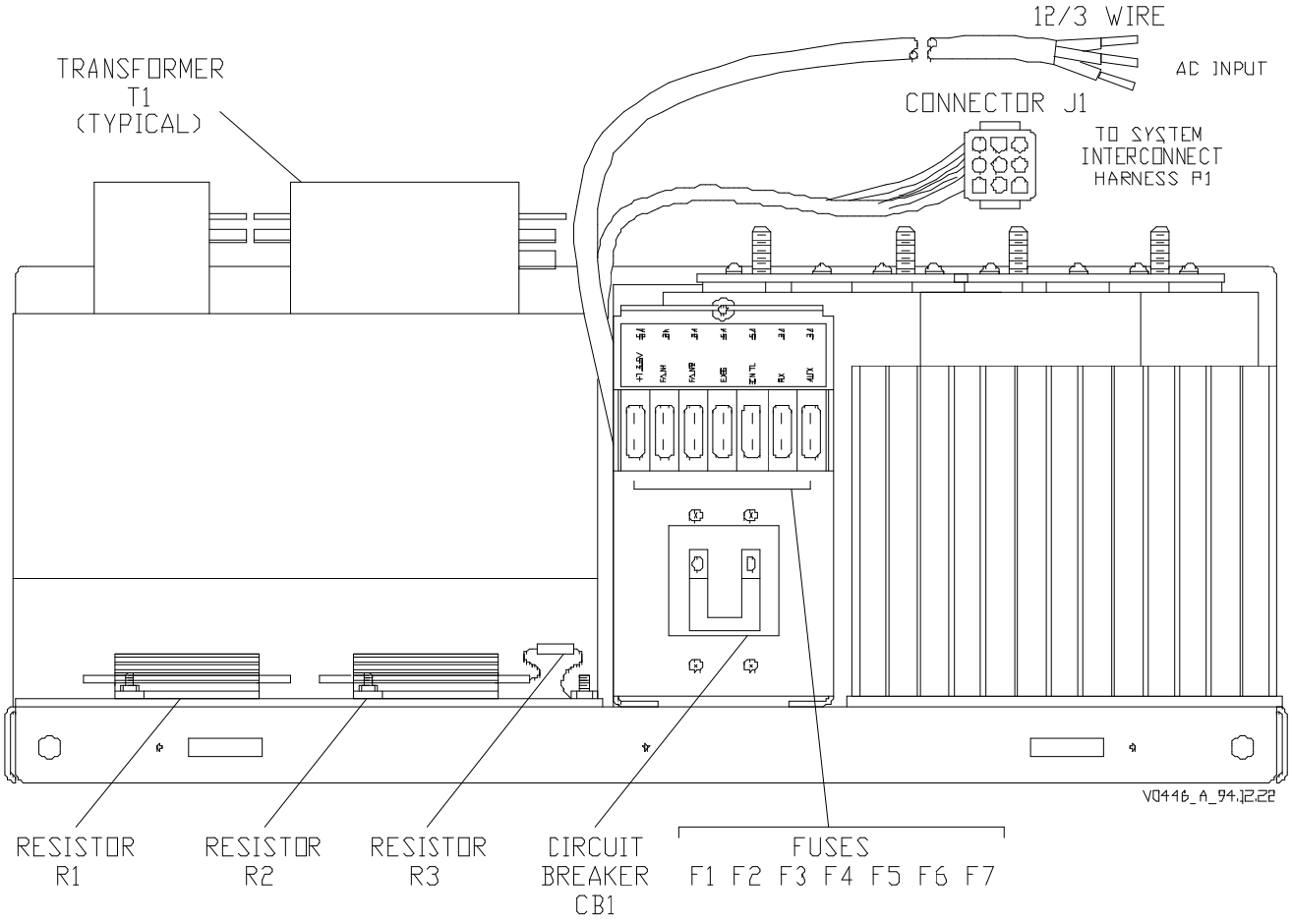

Figure 3-3 Front View of Gold Line 90-A Power Supply

Copyright © 1996 Glenayre

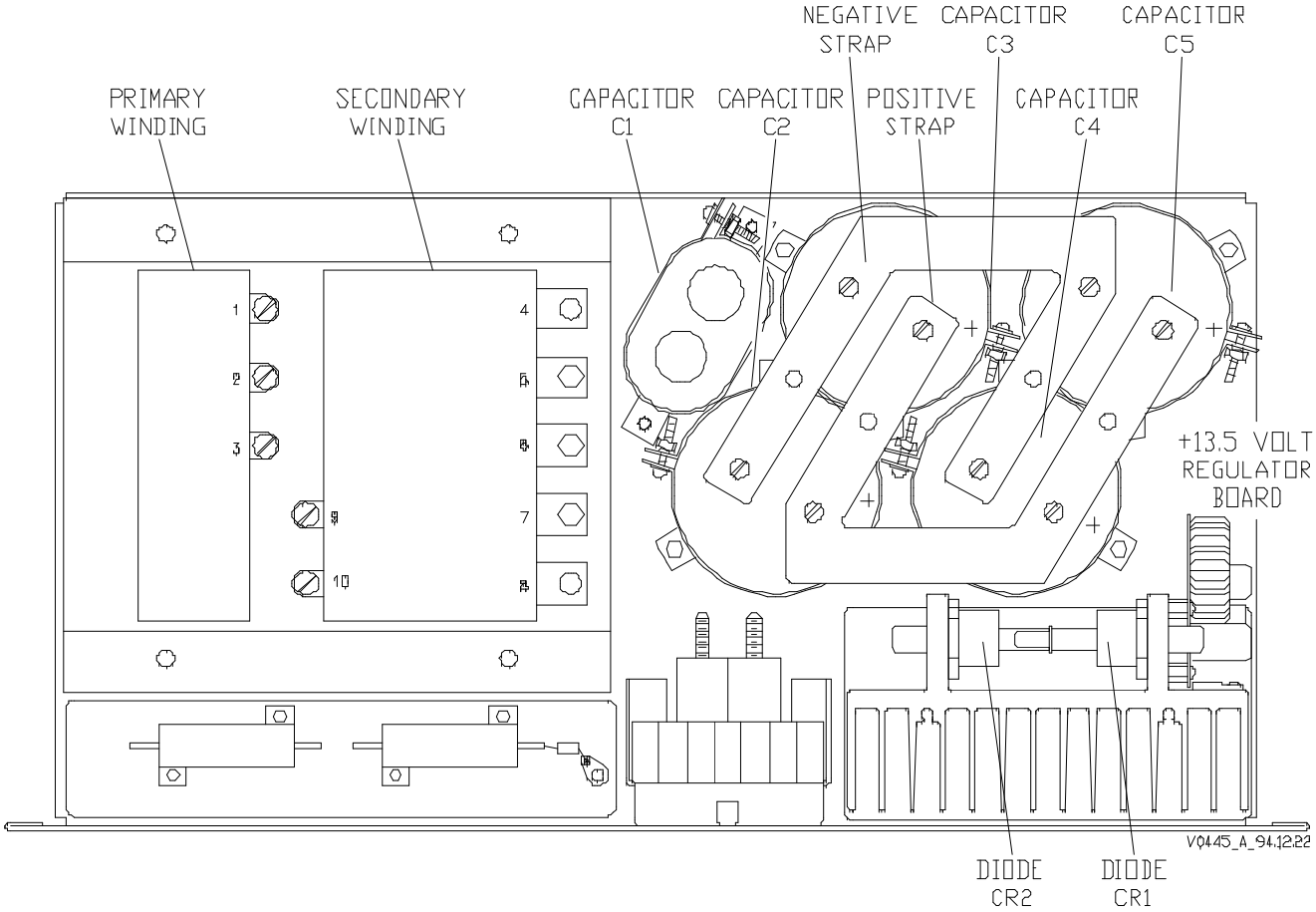

Figure 3-4 Top View of Gold Line 90-A Power Supply

Copyright © 1996 Glenayre

4 INSTALLATION AND SETUP

4.1 Precautions and Hazards

DANGER

The power supply chassis is not protected by interlocks. Disconnect ac power before removing any covers.

DANGER

The power transformer is heavy. Follow precautions for heavy lifting.

4.2 Test Equipment and Tools Required

Common hand tools are required for assembly and disassembly. An RFI-immune voltmeter is required for voltage measurement. Also refer to the system manual.

4.3 Component and Adjustment Locations

Figure 5-1, Gold Line 50-A Power Supply Front-Panel Controls and Indicators, shows the locations of circuit breaker CB1 and the fuses. The only user-setup option is the power-transformer-input-voltage jumpering.

4.4 Installation

4.4.1 Inspection

Refer to the system manual for inspection information.

4.4.2 Power Requirement

Refer to Section 2 for power specifications.

Copyright © 1996 Glenayre

4.4.3 Input/Output Connections

Table 4-1, Input/Output Connections, shows the connections and functions of I/O connections for the power supply. The power transformer input must be jumpered for the expected ac input voltage. Refer to the procedure in this paragraph.

Table 4-1 Input/Output Connections

connection	schematic label and function
CB1-A	**L**. one (black wire) side of ac mains input (goes to TB1-3*)
CB1-B	**L**. other (white wire) side of ac mains input (goes to TB1-2*)
ground stud	**E**. ground (green wire*) conductor for ac mains (goes to TB1-1)
J1-1	**+ AUX**. fuses 25 Vdc for auxiliary equipment
J1-2	**+RX**. fused 25 Vdc for receiver
J1-3	**+CONTROLLER.** fused 25 Vdc for transmitter controller
J1-4	**+EXCITER**. fused 25 Vdc for exciter
J1-5	**+13.5VDC TO PREAMP**. 13.5 Vdc to preamplifier
J1-6	**+FAN 1**. fused 25 Vdc to fan1
J1-7	**+FAN 2**. fused 25 Vdc to fan2
J1-8, -9	unused
filter cap straps	**+**. 25-Vdc to PA **-**. 25 Vdc dc return from PA (See *Figure 3-2* and *Figure 3-4*.)
_____ *terminal strip on rear-rail-mounted air plenum (22” deep cabinet or on side of 10” deep cabinet)	

Power supply output connections are made on the filter capacitor assembly inside the supply. Dc output is cabled directly to the power amplifier chassis. Dc output also goes to other equipment via a connector and cable. Ac input connections are made directly to circuit breaker CB1.

Table 4-2, Transformer Connection and Jumpers, shows the connections and jumper settings for the power supply. The power transformer input must be jumpered for the expected ac input voltage.

Copyright © 1996 Glenayre

Table 4-2 Transformer Connection and Jumpers

50A version power supply		
voltage	**input**	**jumpers**
100V	1 and 5	1 and 4 2 and 5
115V	1 and 6	1 and 4 3 and 6
200	1 and 5	2 and 4
230	1 and 6	3 and 4
90A version power supply		
voltage	**input**	**jumpers**
200	1 and 2	none
230	1 and 3	none

4.4.4 Chassis Removal and Reinstallation

Refer to paragraph 9.5 for a procedure.

4.4.5 Ac Voltage Change

This procedure requires only common hand tools.

Note

Any added jumper must be of adequate wire size to accommodate current requirements. Be certain that all transformer connections are tight.

1. Disconnect ac power and remove power supply cover.
2. Remove supply chassis from rack.
3. Locate power transformer T1; identify primary terminals.
4. Refer to
   Figure 4-1, Ac Jumpering 100 Vac Nominal,
   Figure 4-2, Ac Jumpering 115 Vac Nominal,
   Figure 4-3, Ac Jumpering 200 Vac Nominal,
   Figure 4-4, Ac Jumpering 230 Vac Nominal,
   to configure transformer. Place jumpers for expected line voltage.
5. Reinstall supply chassis into rack; be sure no tools or hardware have been left inside the power supply.
6. Replace supply cover.

Copyright © 1996 Glenayre

4.4.5.1 Dc Voltage Check

Perform the following steps to check power supply output voltage:

1. With transmitter unkeyed, check voltage at external interface on rack cabinet. Dc meter reading should be about 26 Vdc.
2. With transmitter keyed (at rated output), check voltage at external interface. Dc meter reading should be about 24 Vdc

4.5 Ultimate Disposition

Caution

This equipment may contain hazardous materials. Check with the local EPA or other environmental authority before disposing of this equipment.

Copyright © 1996 Glenayre

v0216.hgl

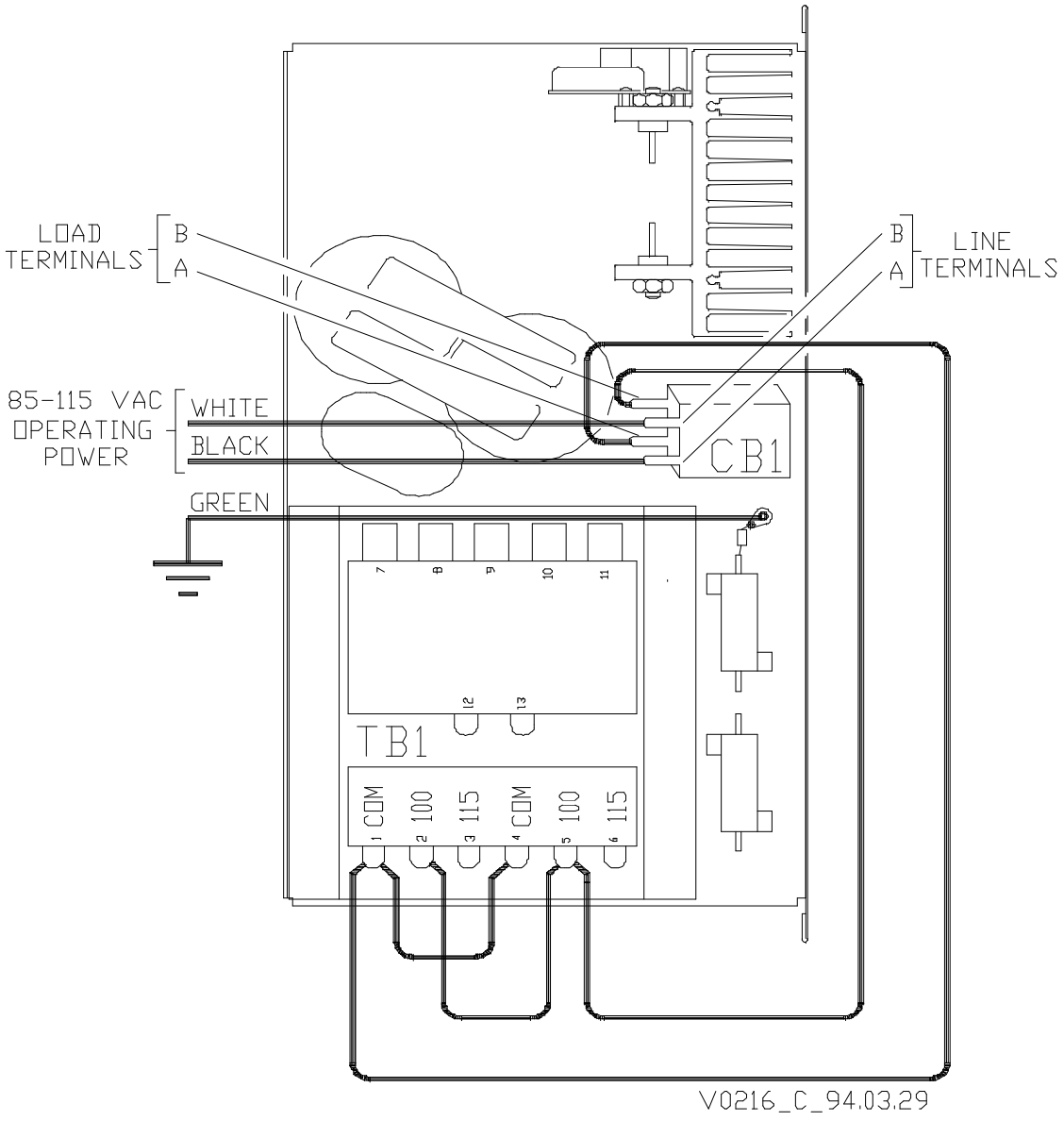

Figure 4-1 Ac Jumpering 100 Vac Nominal

Copyright © 1996 Glenayre

v0217.hgl

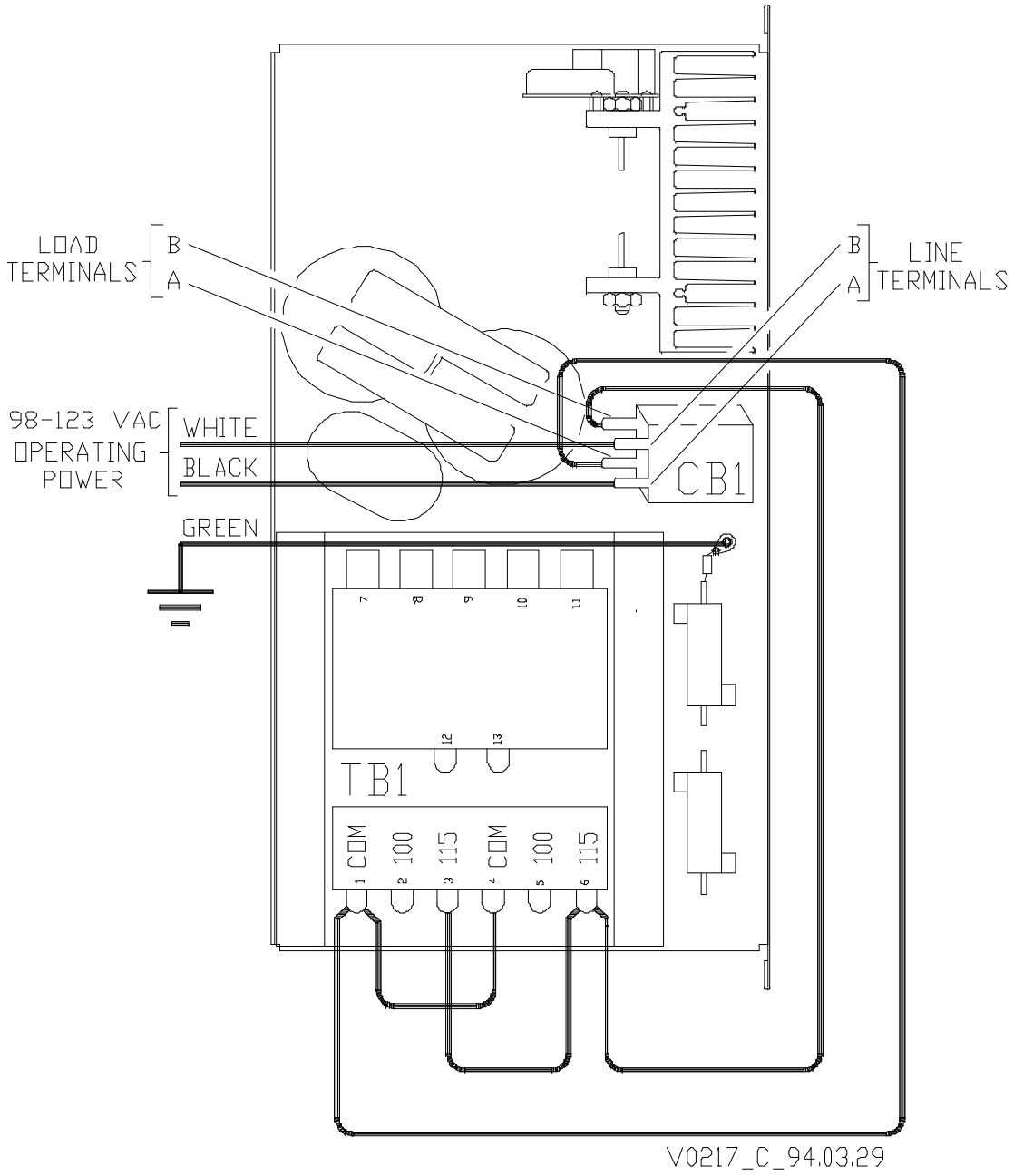

Figure 4-2 Ac Jumpering 115 Vac Nominal

Copyright © 1996 Glenayre

v0218.hgl

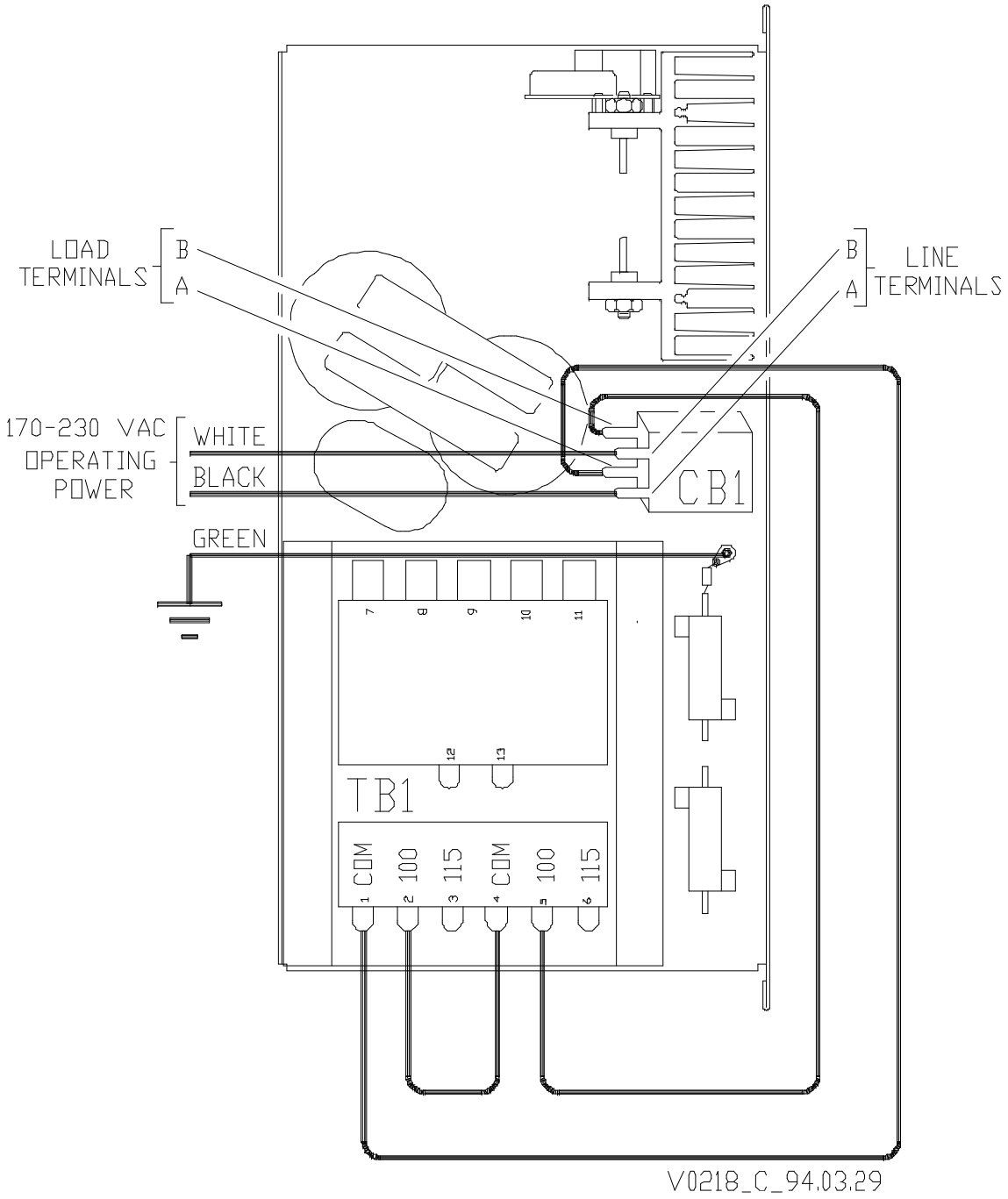

Figure 4-3 Ac Jumpering 200 Vac Nominal

Copyright © 1996 Glenayre

v0219.hgl

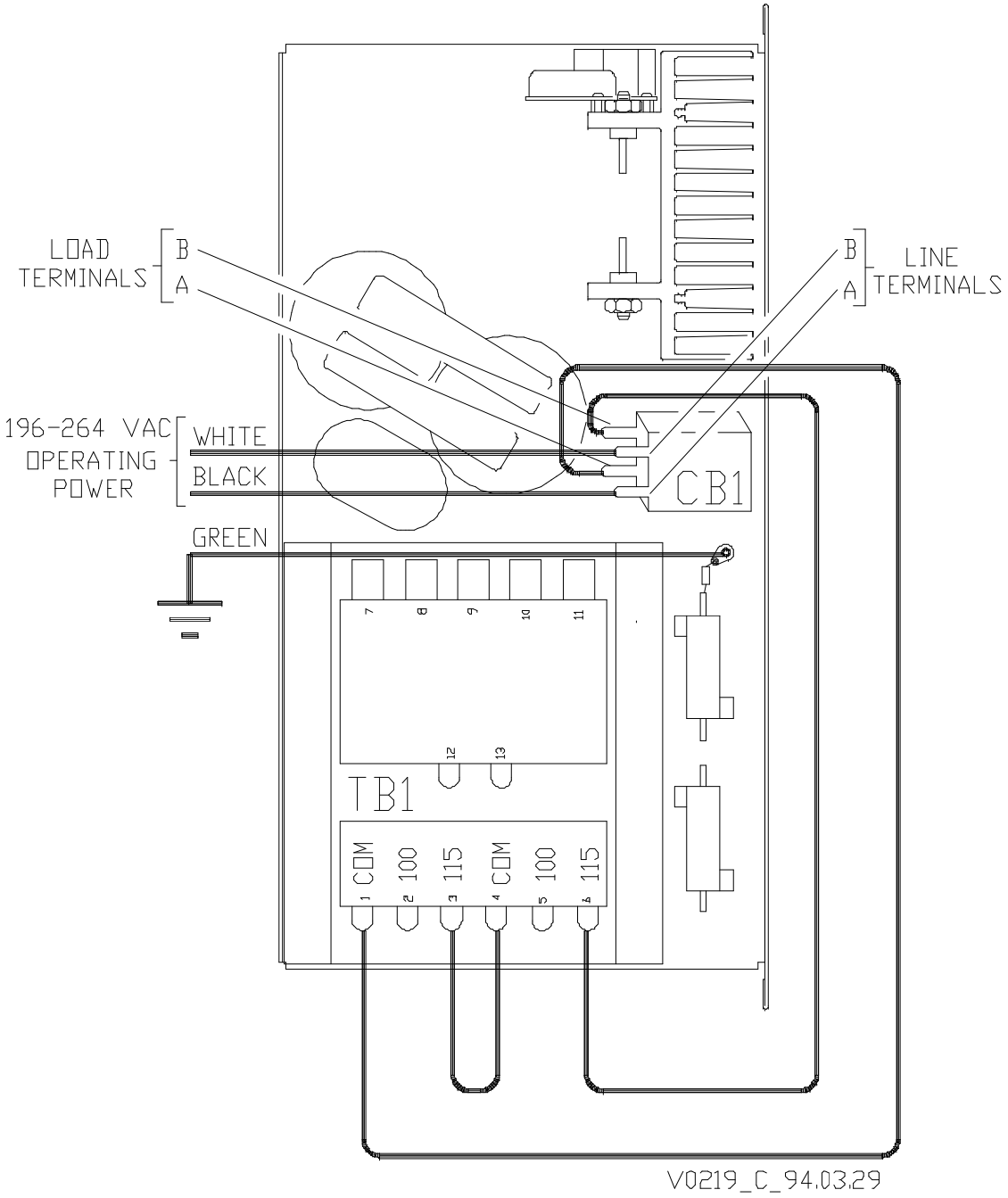

Figure 4-4 Ac Jumpering 230 Vac Nominal

Copyright © 1996 Glenayre

5 OPERATION

5.1 Front-Panel Controls and Indicators

Figure 5-1, Gold Line 50-A Power Supply Front-Panel Controls and Indicators shows a view of the front panel, with a description of the operation of the circuit breaker. The function and ratings of fuses are clearly labelled on the equipment. Note that the fuses are visible from the front panel. In most cases a blown fuse is obvious by visual inspection. Note their condition when troubleshooting the equipment.

5.2 Operating Instructions

The power supply operates in an unattended manner during normal system operation. Use the circuit breaker and fuses when it is necesary to perform maintenance or troubleshooting. Set the circuit breaker to up position to turn on power supply. Set the circuit breaker to down position to turn off power supply.

Copyright © 1996 Glenayre

v0207.hgl

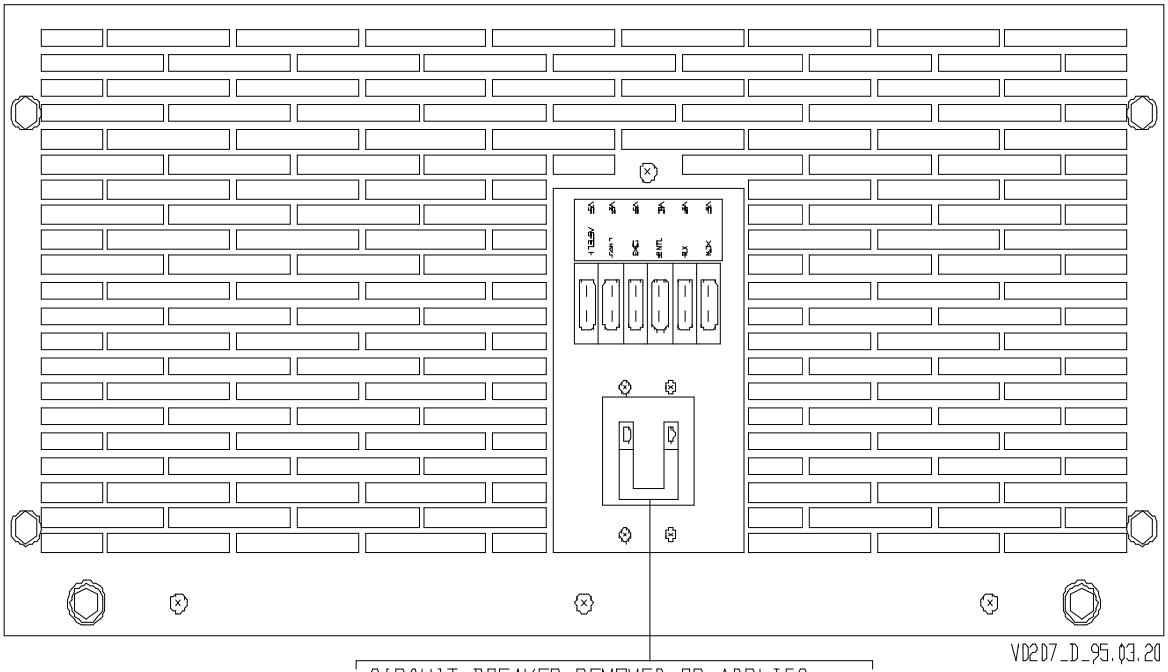

CIRCUIT BREAKER REMOVES OR APPLIES
AC OPERATING POWER TO POWER SUPPLY.
CIRCUIT BREAKER HAS TWO POSITIONS;

0 POSITION - CIRCUIT BREAKER IS OPEN (DOWN)
POWER SUPPLY IS OFF.

1 POSITION - CIRCUIT BREAKER IS CLOSED (UP)
POWER SUPPLY IS ON.

NOTE; 90A VERSION SUPPLY HAS ADDITIONAL FUSE NOT SHOWN.

Figure 5-1 Gold Line 50-A Power Supply Front-Panel Controls and Indicators

Copyright © 1996 Glenayre

6 THEORY OF OPERATION

6.1 Chassis Components

Refer to *Figure 6-1* and *Figure 6-2*.

Ferroresonant transformer T1 and resonating capacitor C1 act as a reservoir to allow a constant voltage output despite changing load conditions as long as a constant voltage is applied to the input. It is electrically protected by circuit breaker CB1. There are taps on the primary of the power transformer to allow various ranges of input voltage.

Output is rectified by CR1 and CR2, and filtered by C2, C3, and C4, and C5 to provide a filtered, stable dc output. Dc output for the PA is cabled directly from the filter capacitor assembly to terminals mounted on the side of the equipment rack. Dc for the exciter, receiver, controller, fans, and auxiliary equipment is routed through plug J1.

6.2 Voltage Regulator Assembly

Refer to *Figure 6-3*.

The 13.5-volt output of voltage regulator IC U1 is set by the values of R1 through R3. Associated components filter and protect the assembly from damage due to electrical transients.

Copyright © 1996 Glenayre

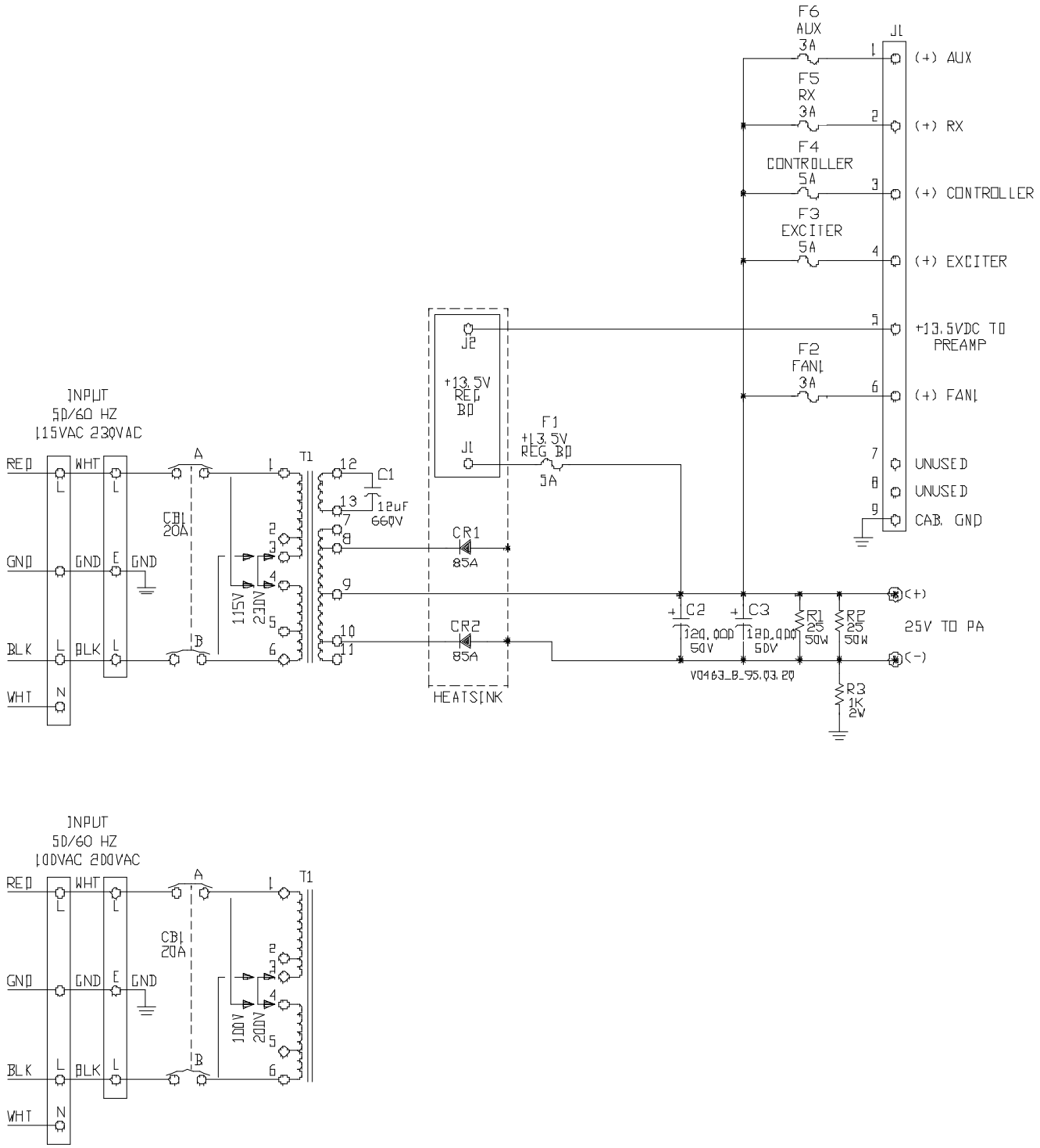

Figure 6-1 50A Power Supply Functional Diagram

Copyright © 1996 Glenayre

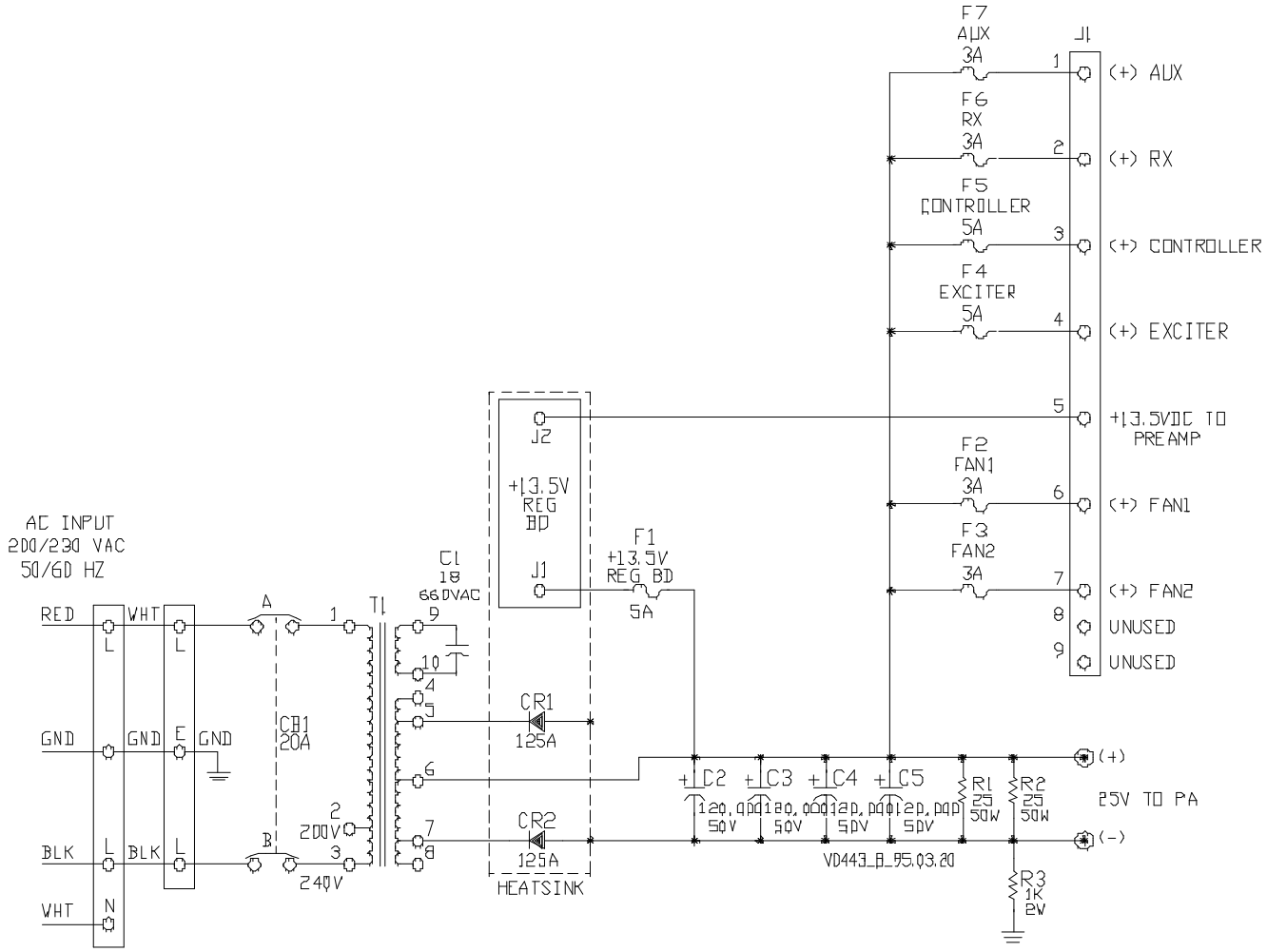

Figure 6-2 90A Power Supply Functional Diagram

Copyright © 1996 Glenayre

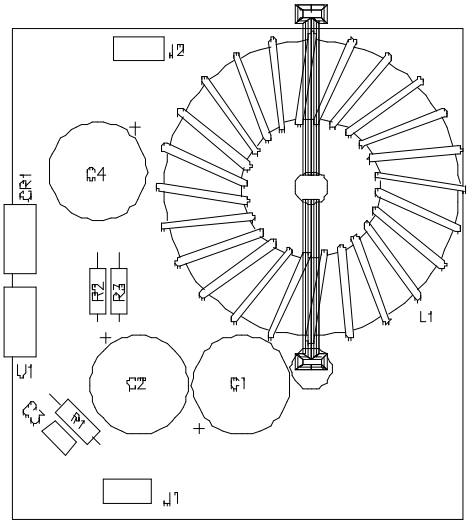

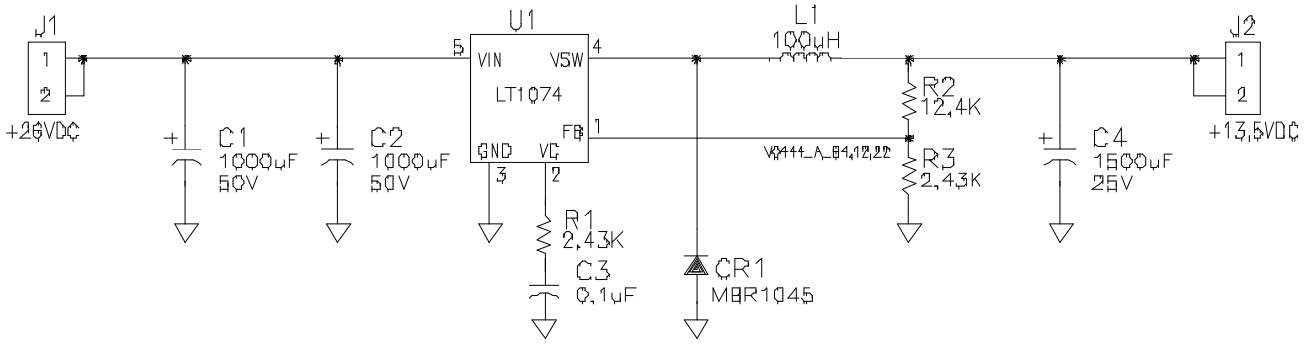

Figure 6-3 Power Supply 13.5V Regulator Assembly/Functional Diagram

Copyright © 1996 Glenayre

7 MAINTENANCE

7.1 Location of Maintenance Procedures

Most maintenance of electrical assemblies is done via the VT100 interface. Refer to the system and menu manuals. No maintenance procedures are performed on a regular schedule. See section 8 of this manual for more information. Refer to *Figure 7-1, Gold Line 50A Power Supply Assembly 265-0082-012* for additional information.

Copyright © 1996 Glenayre

v0479l.hgl

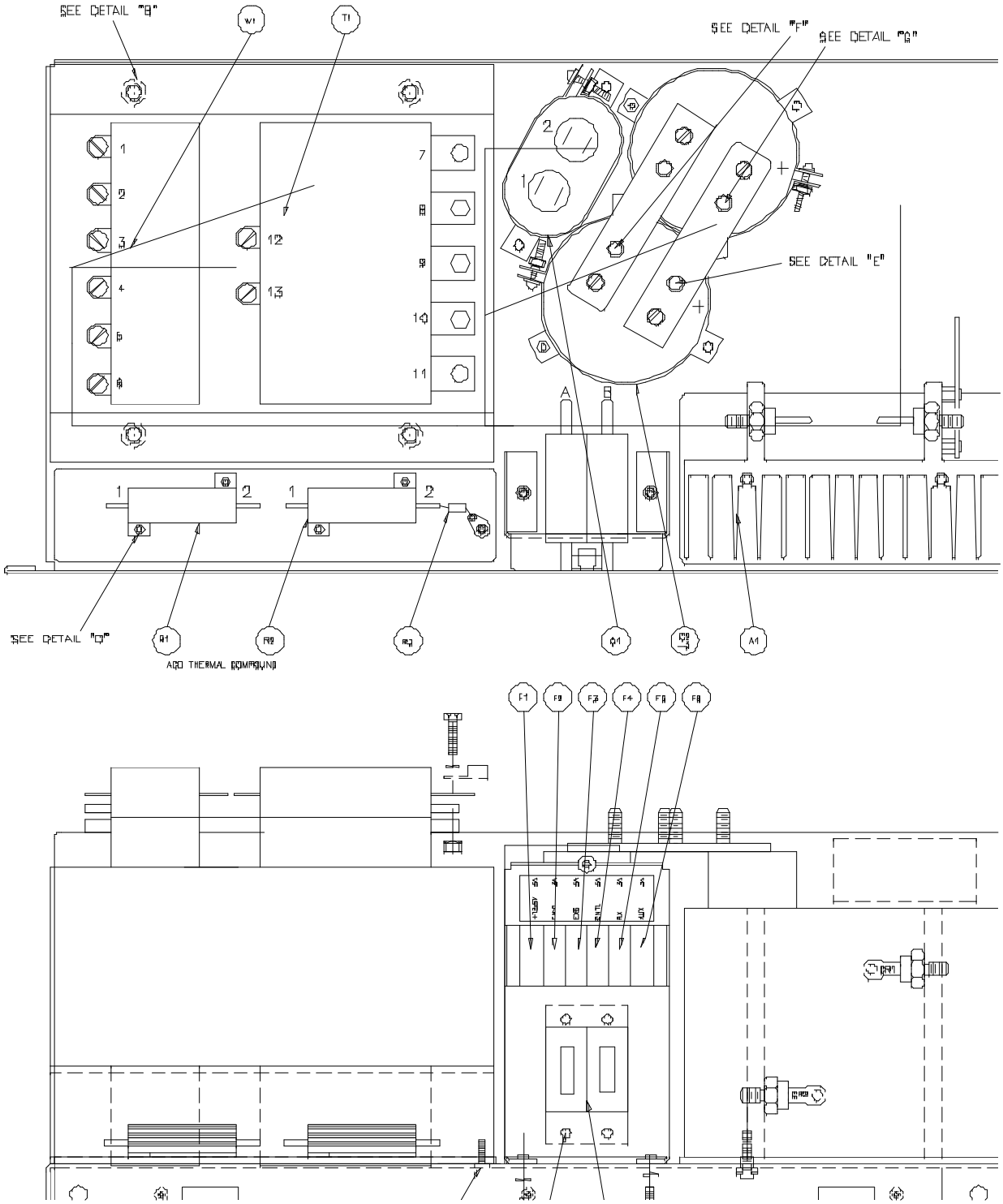

Figure 7-1 Gold Line 50A Power Supply Assembly 265-0082-012

Copyright © 1996 Glenayre

v0479r.hgl

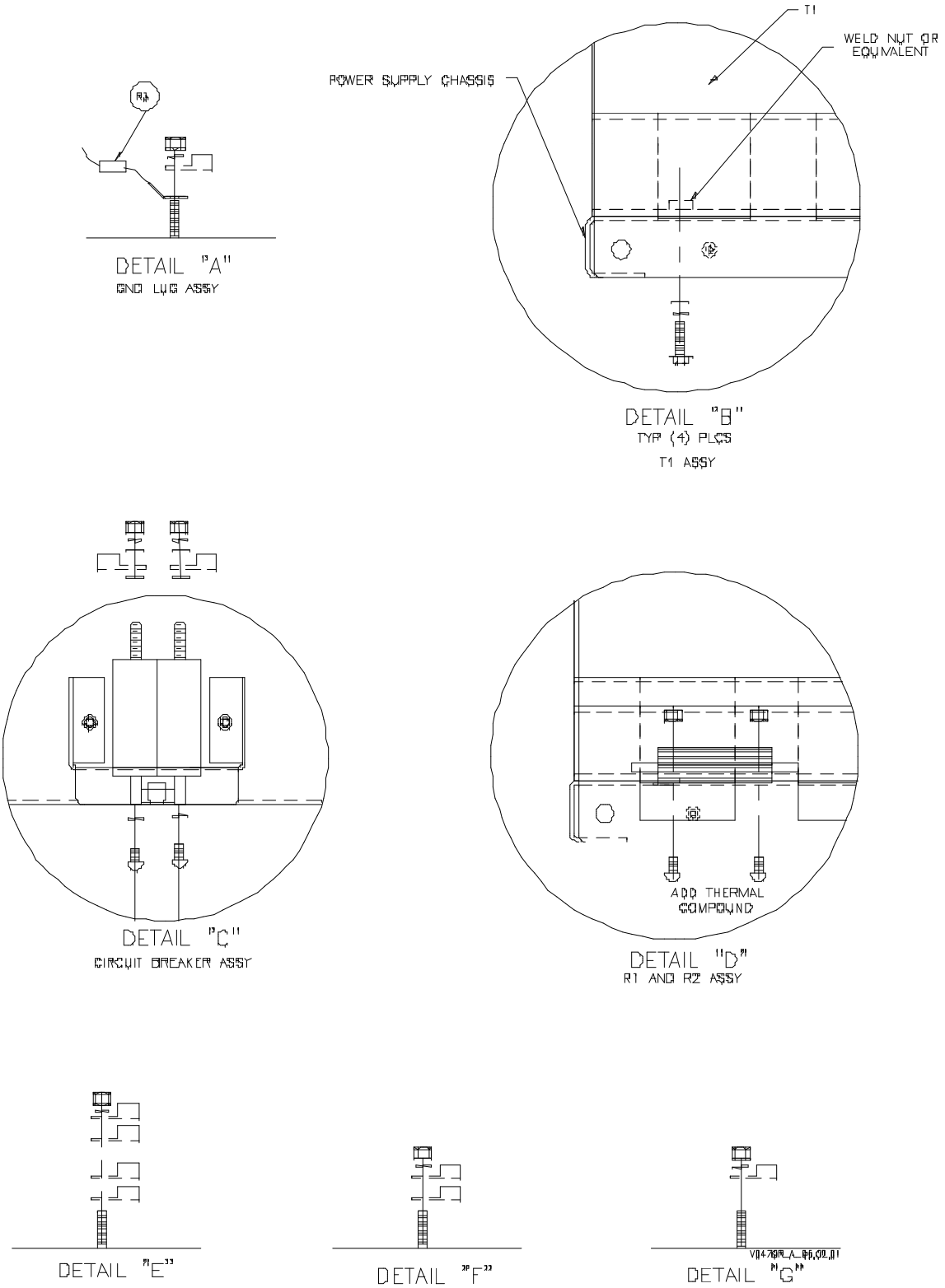

Figure 7-1 Gold Line 50A Power Supply Assembly 265-0082-012

Copyright © 1996 Glenayre

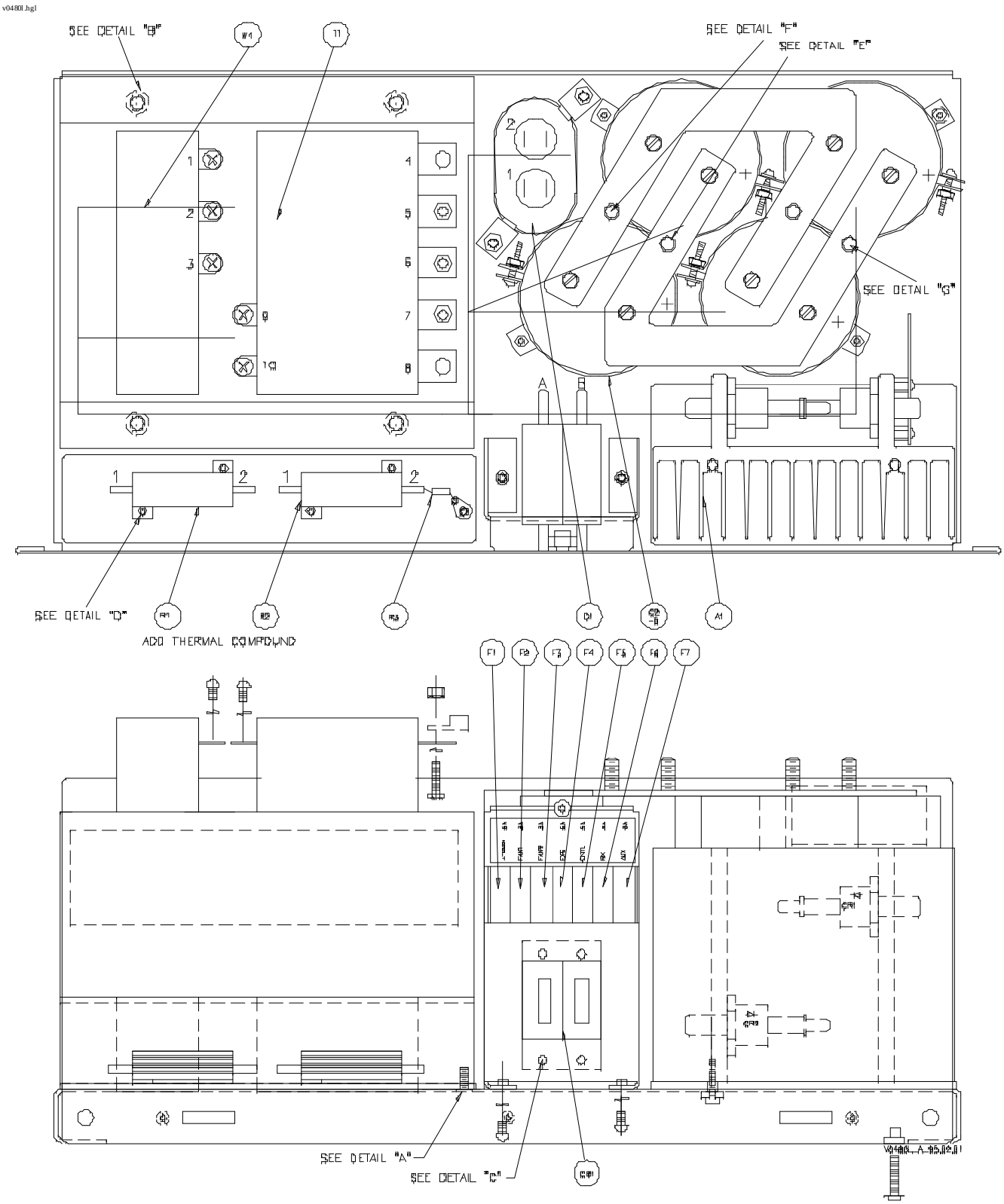

Figure 7-2 Gold Line 90A Power Supply Assembly 265-0082-006

Copyright © 1996 Glenayre

v0480r.hgl

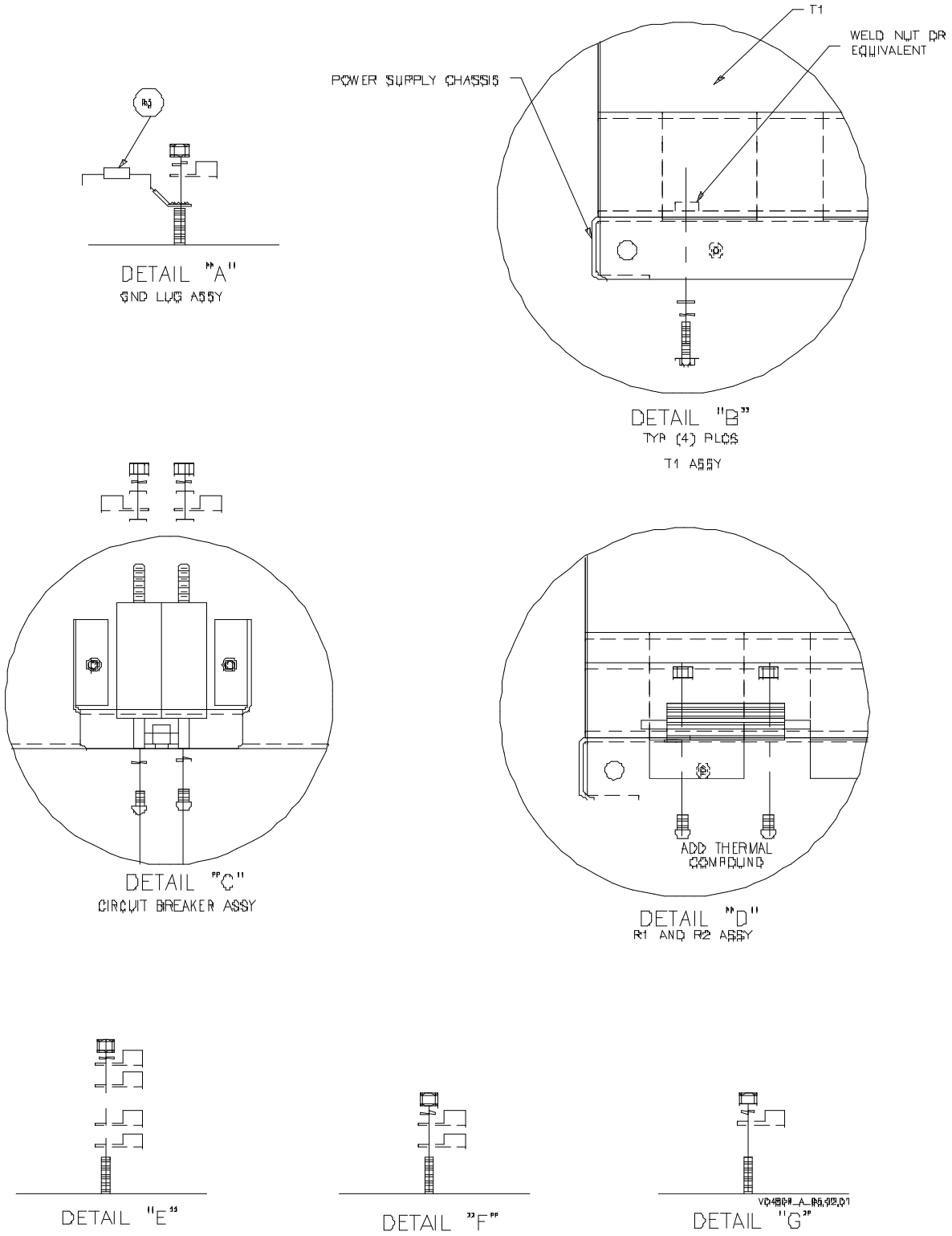

Figure 7-2 Gold Line 90A Power Supply Assembly 265-0082-006

Copyright © 1996 Glenayre

Copyright © 1996 Glenayre

8 CHECKOUT AND TROUBLESHOOTING

8.0.1 Test Equipment and Tools Required

Common hand tools are required for assembly and disassembly. An RFI-immune voltmeter is required to measure dc voltages.

8.0.2 Precautions

Follow all danger advisories in paragraph 9.1, as ac power is applied to equipment during some tests. Only qualified technicians should perform these service items.

8.0.3 Resonator Capacitor Check

With main power applied, connect a dc meter across the supply dc output. Level should be 24-27 Vdc. .

This check is complete.

8.0.4 Transformer Check

With ac input power applied, connect an ac meter across the secondary winding of the transformer.

Approximately twice supply voltage (50 Vac) should be present.

This check is complete.

8.0.5 Diode Check

With power off, disconnect each diode from the heat sink.

Check with ohmmeter in diode-checking mode from each diode anode to the heat sink; normal dc conduction should be present from each one.

This check is complete.

Copyright © 1996 Glenayre

Copyright © 1996 Glenayre

9 REMOVAL AND REINSTALLATION

9.1 Precautions and Hazards

DANGER

The power supply chassis is not protected by interlocks. Disconnect ac power before removing any covers.

DANGER

The power transformer is heavy. Follow precautions for heavy lifting.

9.2 Test Equipment and Tools Required

Common hand tools are required for assembly and disassembly. An RFI-immune voltmeter is required for voltage measurement.

9.3 Ac Voltage Change

If the power supply or power transformer is replaced, the expected input voltage must be set before ac power is applied. Refer to the installation in Section 4.

9.4 Component Locations

Regarding component locations in the 50A supply, see *Figure 3-1*, *Figure 3-2*, and *Figure 7-1*.

Regarding component locations in the 90A supply, see *Figure 3-3*, *Figure 3-4*, and *Figure 7-2*.

9.5 Chassis Removal and Reinstallation

Heed all danger references at the beginning of this section. Refer to *Figure 9-1, Power Supply Removal and Reinstallation from/into rack* throughout this procedure.The 90A power supply picture is similar except it has four capacitors instead of two.

Copyright © 1996 Glenayre

9.5.1 Removing Chassis from Rack

Perform the following steps to remove the chassis:

1. Disconnect primary power to cabinet before continuing.
2. Remove the front cover; it is held by several machine screws.
3. Remove two bolts in bottom-front of supply chassis.
4. Pull chassis out of rack enough to access electrical connections.
5. Disconnect wiring harness plug.
6. Remove dc cables from filter capacitor gridwork.
7. Disconnect 3-conductor power cable from rear-mounted TB1.
8. Remove supply from rack carefully.

This procedure is complete.

9.5.2 Reinstalling Power Supply into Rack

Installing the supply is done by performing the following steps:

1. Set the supply partially into rack.
2. Connect dc cables to capacitor gridwork.
3. Reconnect 3-conductor power cable to rear-mounted TB1.
4. Reconnect wiring harness plug.
5. Push supply into rack; be careful not to damage any wiring.
6. Secure supply with two bolts in bottom-front edge of chassis.
7. Secure front cover with machine screws.

This procedure is complete.

9.6 Removing and Reinstalling the 13.5-Volt Regulator

If it becomes necessary to replace the 13.5-volt regulator, perform the following procedures. Refer to *Figure 9-2, 13.5-Volt Regulator Board Removal and Reinstallation* throughout these procedures. It is assumed that the power supply chassis has been removed from the rack.

Copyright © 1996 Glenayre

9.6.1 Removing 13.5-Volt Regulator

1. Carefully note electrical connections to board.
2. Remove connectors from J1 and J2.
3. Note arrangement of hardware on mounting screws and transistors. Replacing parts in correct order is essential to successful assembly replacement.
4. Remove screws from heat-sink-mounted transistors.
5. Remove screws from On edges of pc assembly so that assembly comes loose from standoffs..
6. Remove assembly

9.6.2 Reinstalling 13.5-Volt Regulator

1. Check insulators between transistors and heat sink for damage. Make sure that insulators are undamaged and have adequate thermal compound on both sides and that no grit or other foreign substances are embedded in thermal compound.
2. Place regulator assembly on standoffs by heat sink.
3. Replace screws which mount pc board to standoffs.
4. Replace screws and hardware to attach transistors to large heat sink.
5. Reattach electrical connections to J1 and J2.

Copyright © 1996 Glenayre

v0212.hgl

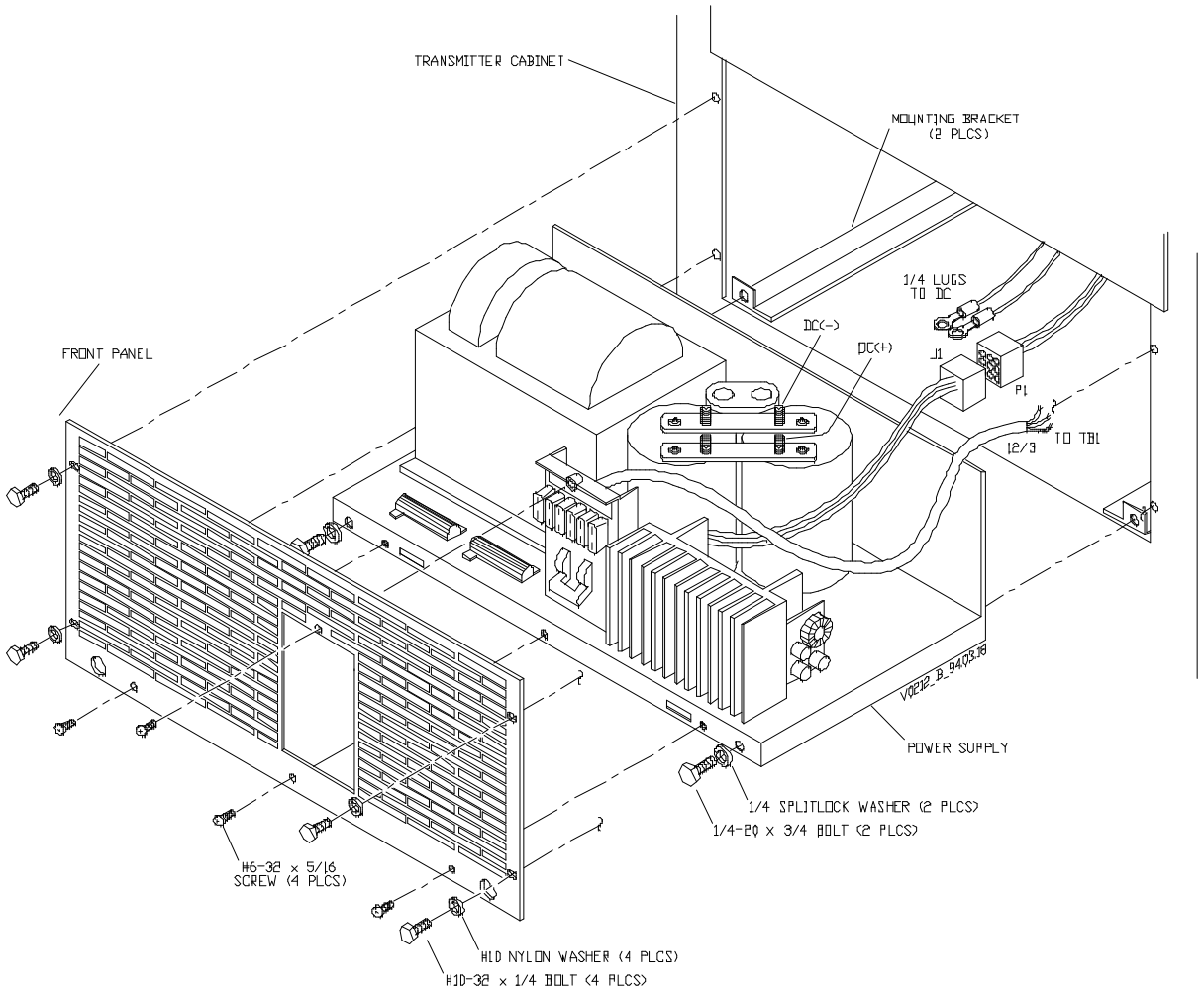

Figure 9-1 Power Supply Removal and Reinstallation from/into rack

Copyright © 1996 Glenayre

v0215.hgl

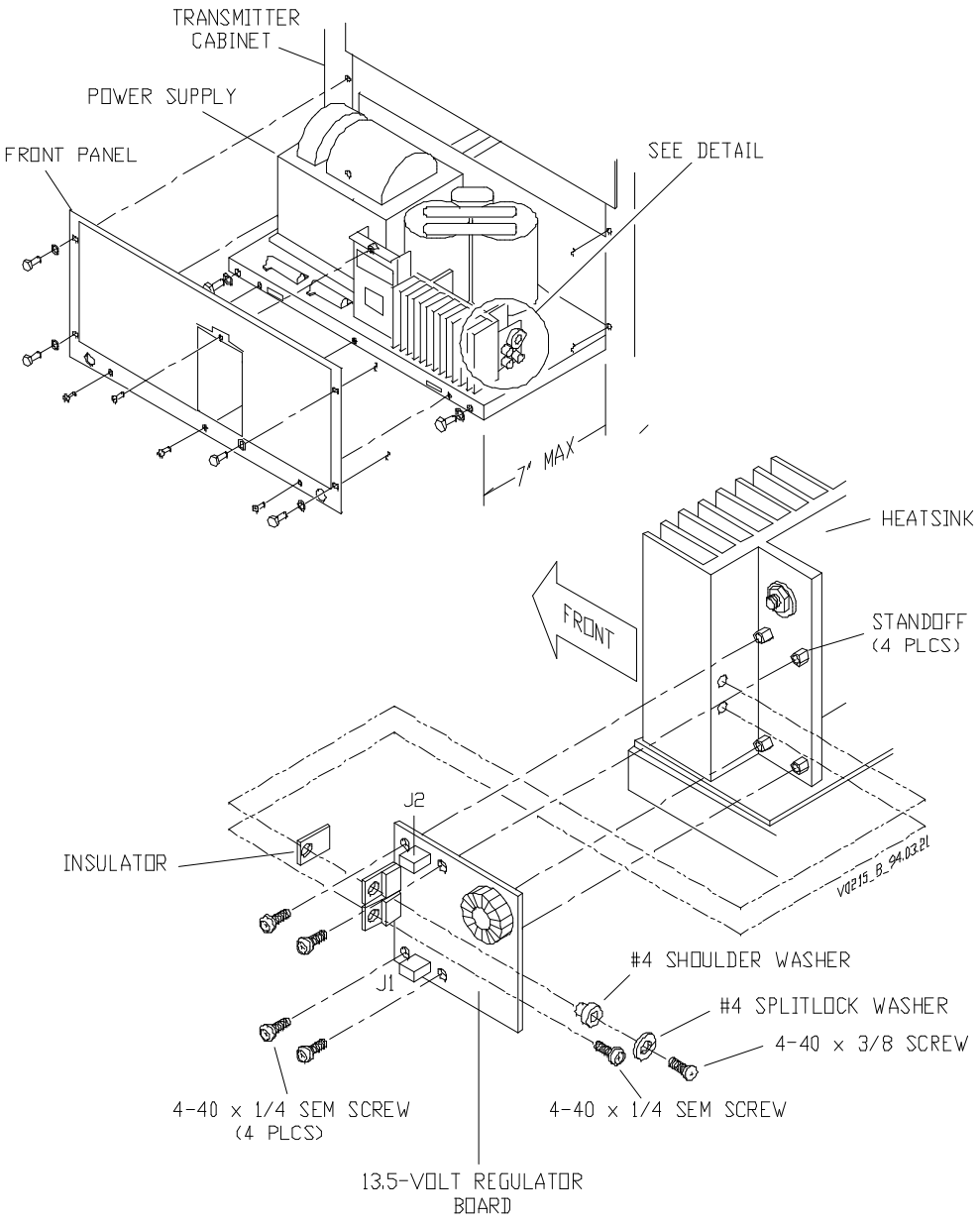

Figure 9-2 13.5-Volt Regulator Board Removal and Reinstallation

Copyright © 1996 Glenayre

Copyright © 1996 Glenayre

PTION

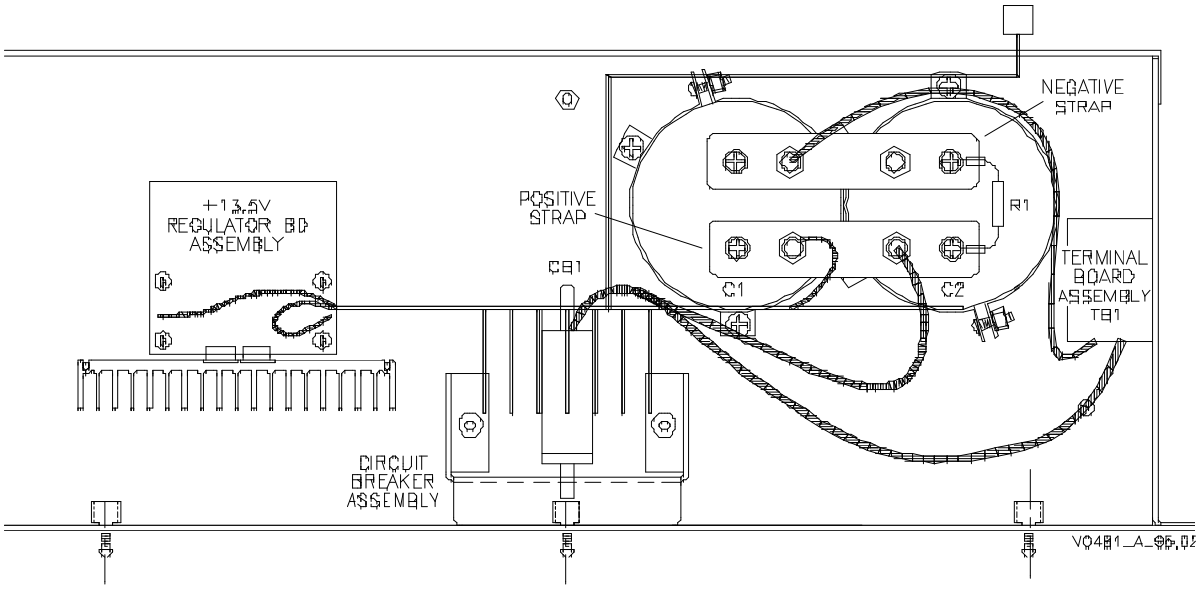

Figure 10-1 Gold Line 50/90A DC Only Power Supply Assembly

Copyright © 1996 Glenayre

v0482.hgl

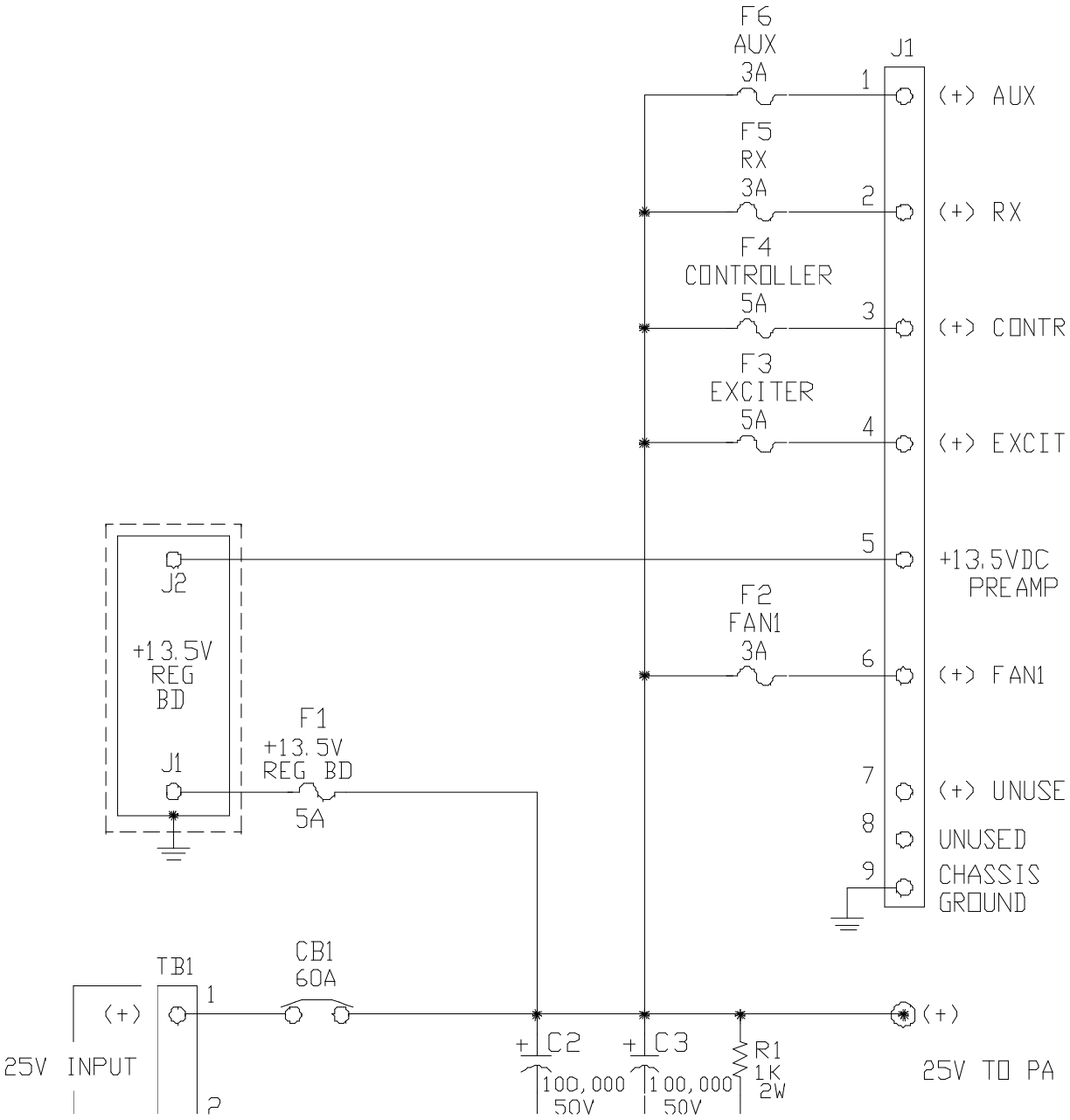

Figure 10-2 Gold Line 50A DC-Only Power Supply Functional Diagram

Copyright © 1996 Glenayre

v0483.hgl

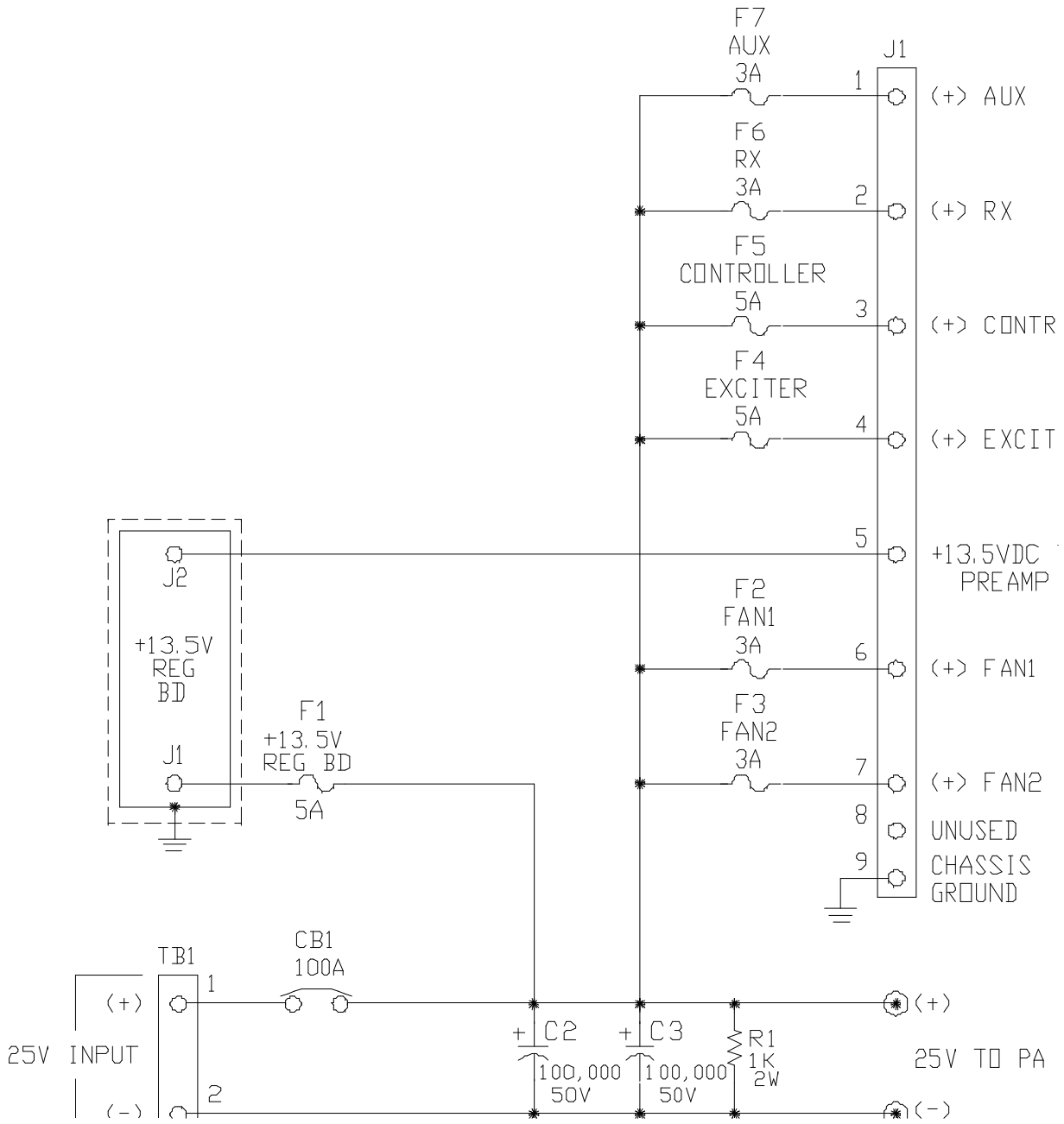

Figure 10-3 Gold Line 90A DC-Only Power Supply Functional Diagram

Copyright © 1996 Glenayre

Copyright © 1996 Glenayre

Index

Numerics

13.5-Volt Regulator Assembly 261-0082-001 10-3

A

ac line frequency 8-1

C

controls and indicators, front panel 5-2

D

description
- 13.5-volt regulator 6-1
- detailed 6-1
- simplified 3-2

diode check 8-1

G

Gold Line 50-A Power Supply Assembly 265-0082-012 10-1

I

I/O connections 4-2
input voltage, setting power transformer jumpers 4-3

M

manual contents 1-2
manual part numbers 1-1

R

rack units 3-1
removal and reinstallation
- 13.5-volt regulator 9-2
- chassis 9-1

resonator capacitor 8-1

S

specifications 2-1

T

test equipment required 4-1
tools required 4-1
transformer check 8-1

Copyright © 1996 Glenayre

Copyright © 1996 Glenayre