DSP Exciter With Wideband Option

USER MANUAL
PN 9110.00172 **(old part number = 916-T70A-003)**
REV I
RELEASED

Specifications subject to change without notice

Copyright © 1997 Glenayre

All rights reserved. No part of this work may be reproduced or copied in any form or by any means—graphic, electronic, or mechanical, including photocopying, recording, taping, or information-retrieval system—without written permission of Glenayre.

Document Change Record

Issue: 1
Date: 05/09/95
Changes: none, original

Issue: Rev B
Date: 02/07/96
Changes: added wideband information

Issue: Rev C
Date: 02/29/96
Changes: changed jumpers, drawing main bd

Issue: Rev D
Date: 4/25/96
Changes: changed VCO-2 status reading

Issue: Rev E
Date: 5/14/96
Changes: added Over-The-Link and On-The-Fly information

Issue: Rev F
Date: 5/23/96
Changes: added one RU space for reinstallation and net channel change time for setup

Issue: Rev G
Date: 9/03/96
Changes: changed PA fault input pin 11 on Table 4-4

Issue: Rev H
Date: 9/20/96
Changes: revised chapter 4 jumper information, added Table 4-5

Issue: Rev I
Date: 01/15/97
Changes: added and changed VCO board numbers in Table 3-1

Copyright © 1997 Glenayre

sec_1.toc

Table of Contents

1 GENERAL 1-1

1.1 Manual Scope 1-1

1.1.1 Applicable Documents 1-1

1.2 Manual Sections 1-1

1.3 Exciter Identification 1-1

2 SPECIFICATIONS 2-1

3 DESCRIPTION 3-1

3.1 Introduction 3-1

3.2 Physical Description 3-1

3.3 Simplified Block-Diagram Description 3-3

4 INSTALLATION AND SETUP 4-1

4.1 Precautions and Hazards 4-1

4.2 Test Equipment and Tools Required 4-1

4.3 Component and Adjustment Locations 4-1

4.4 Installation 4-1

4.4.1 Inspection 4-1

4.4.2 Power Requirement 4-2

4.4.3 Input/Output Connections 4-2

4.4.4 Signal Functions 4-2

4.4.5 Switches and Jumpers 4-3

4.5 Setup 4-4

4.6 Ultimate Disposition 4-4

5 OPERATION 5-1

5.1 Front-Panel Controls and Indicators 5-1

5.2 Operating Instructions 5-1

6 THEORY OF OPERATION 6-1

6.1 Exciter/PA Control 6-1

6.1.1 Reference Source 6-1

6.1.2 Main Circuit Frequencies 6-1

6.1.3 Controller Interface Connector Functions 6-1

6.2 Interface to Controller 6-3

6.2.1 General 6-3

6.2.2 Interface Conversion Functions 6-3

Copyright © 1997 Glenayre

6.3 DSP Modulator 6-4
6.3.1 General 6-4
6.3.2 DSP Modulator Signal Flow 6-4
6.4 IF Stage 6-7
6.4.1 Mixer-1 6-7
6.4.2 Filter 6-7
6.4.3 VCO-1 6-7
6.4.4 Synthesizer-1 6-7
6.5 MCU 6-8
6.5.1 Microcontroller Unit (MCU) 6-8
6.5.2 Digital-to-Analog (D/A) Converter 6-9
6.5.3 8/16-Bit Converter 6-9
6.5.4 Read-Only Memory 6-9
6.5.5 VSWR-Fault Detector 6-14
6.5.6 Alarm Data-to-Logic Conversion 6-14
6.6 RF Assemblies 6-14
6.6.1 RF Stage Location 6-14
6.6.2 RF Assemblies 6-14
6.7 Voltage Regulator Circuit 6-16
7 MAINTENANCE 7-1
7.1 Location of Maintenance Procedures 7-1
7.2 Test Equipment Required 7-1
7.3 VCO-2 Adjustment Procedure 7-1
7.3.1 VCO-2 Multichannel Adjustment Procedure 7-1
7.3.2 VCO-2 Single-Channel Adjustment Procedure 7-1
7.4 Over-The-Link Downloading 7-2
7.5 On-The-Fly Channel/Mode Changing 7-2
7.5.1 Programming Example 7-3
7.6 16-Channel Operation 7-4
7.7 On-The-Fly Interface 7-5
8 CHECKOUT AND TROUBLESHOOTING 8-1
8.1 CHECKOUT 8-1
8.2 TROUBLESHOOTING 8-1

Copyright © 1997 Glenayre

sec_1.toc

9 REMOVAL AND REINSTALLATION 9-1

9.1 Exciter/PA Control Chassis 9-1

9.1.1 Removal Procedure 9-1

9.1.2 Reinstallation Procedure 9-1

9.2 Exciter Cover 9-2

9.2.1 Removal Procedure 9-2

9.2.2 Reinstallation Procedure 9-2

9.3 Exciter/Control Board 9-5

9.3.1 Removal Procedure 9-5

9.3.2 Reinstallation Procedure 9-5

9.4 Interface Board 9-8

9.4.1 Removal Procedure 9-8

9.4.2 Reinstallation Procedure 9-8

9.5 VCO/RF Amplifier Board 9-8

9.5.1 Removal Procedure 9-9

9.5.2 Reinstallation Procedure 9-9

10 OPTIONS 10-1

10.1 Exciter/PA Control with QT-1000 Interface 10-1

10.1.1 Reference Source 10-1

10.1.2 Controller Interface Connector Functions 10-1

10.1.3 QT-1000 Interface Conversion Functions 10-1

10.2 Exciter/PA Control with Standard Interface 10-5

10.2.1 Reference Source 10-5

10.2.2 Controller Interface Connector Functions 10-5

10.2.3 Standard Interface Conversion Functions 10-5

10.3 Exciter/PA Control with I20 Interface 10-8

10.3.1 Reference Source 10-8

10.3.2 Controller Interface Connector Functions 10-8

10.3.3 I20 Interface Conversion Functions 10-9

Copyright © 1997 Glenayre

Copyright © 1997 Glenayre

sec_1.lof

List of Figures

Figure 1-1 DSP Exciter Isometric View 1-2

Figure 3-1 DSP Exciter Rear View 3-4

Figure 3-2 DSP Exciter Top View with Internal Controls and Indicators 3-5

Figure 3-3 DSP Exciter Simplified Functional Diagram 3-6

Figure 4-1 DSP Exciter/PA Control Circuit Boards Interconnection Diagram 4-5

Figure 5-1 Front-Panel Controls and Indicators 5-2

Figure 6-1 DSP Exciter RF Stage Functional Diagram 6-2

Figure 6-2 DSP Exciter MCU Circuit Functional Diagram 6-6

Figure 6-3 DSP Exciter-to-Controller Functional Diagram 6-10

Figure 6-4 DSP Exciter Detailed Functional Diagram 6-12

Figure 6-5 DSP Exciter IF-Stage Detailed Functional Diagram 6-13

Figure 7-1 On-The-Fly C2000 Control Lines to DSP Exciter 7-5

Figure 9-1 DSP Exciter Chassis Removal and Reinstallation 9-3

Figure 9-2 DSP Exciter Cover Removal and Reinstallation 9-4

Figure 9-3 DSP Exciter Control Board Removal and Reinstallation 9-7

Figure 9-4 DSP Exciter External Interface I/O Board Removal and Reinstallation 9-10

Figure 9-5 DSP Exciter Interface Board Removal and Reinstallation 9-11

Copyright © 1997 Glenayre

Copyright © 1997 Glenayre

sec_1.lot

List of Tables

Table 1-1 Manual Contents 1-1
Table 2-1 Exciter Specifications 2-1
Table 3-1 Part Numbers of VCO/RF Amplifier Boards 3-1
Table 3-2 Part Numbers of Interface Boards 3-2
Table 3-3 Part Numbers of Interface I/O Boards 3-2
Table 3-4 Assembly and Control Board Numbers 3-3
Table 4-1 Test Equipment Required 4-1
Table 4-2 DSP Exciter I/O Connectors 4-2
Table 4-3 VT100 Interface Connector J3 Pin Assignments 4-3
Table 4-4 Control Board Connector J6 Pin Assignments 4-3
Table 4-5 Exciter Control Board Jumper Positions 4-4
Table 6-1 Exciter RF/Main Circuit Frequencies 6-1
Table 7-1 Deviation and Offset Programming 7-3
Table 10-1 Interface Board Connector J4 (QT-1000) 10-3
Table 10-2 Receiver Connector J5 Pin Functions (QT-1000 with external I/O board) 10-4
Table 10-3 Remote Select Input vs. Channel (QT-1000) 10-4
Table 10-4 Remote Select Input vs. Mode (QT-1000) 10-4
Table 10-5 Interface Board Connector J4 (Standard) 10-7
Table 10-6 Remote Select Input vs. Channel (standard) 10-7
Table 10-7 Remote Select Input vs. Mode (standard) 10-8
Table 10-8 Interface Board Connector J1 10-10
Table 10-9 Interface Board Connector J2 10-11
Table 10-10 Remote Select Input vs. Channel (I20) 10-11
Table 10-11 Remote Select Input vs. Mode (I20) 10-11

Copyright © 1997 Glenayre

Copyright © 1997 Glenayre

1 GENERAL

1.1 Manual Scope

This manual is intended for use as a technical reference guide to the Glenayre DSP exciter and contains information on exciter connection, setup, and maintenance.

1.1.1 Applicable Documents

sec_1

Applicable Glenayre documents are listed in the applicable system manual.

1.2 Manual Sections

Refer to *Table 1-1, Manual Contents*. Also refer to table of contents in this manual.

Table 1-1 Manual Contents

section No. and title	contents
1 General	this section
2 Specifications	exciter specifications
3 Descriptions	listing of options and assemblies covered, simplified description, physical description, simplified block theory of operation
4 Installation and Setup	exciter installation, setup, and lists of connections
5 Operation	list, description, and location of operator controls and indicators
6 Theory of Operation	assembly-level description of exciter operation
7 Maintenance	exciter maintenance
8 Checkout and Troubleshooting	exciter checkout and troubleshooting
9 Removal and Reinstallation	procedures for removing and reinstalling exciter and exciter assemblies
10 Options	list and discussion of user selectable options

1.3 Exciter Identification

Refer to Figure *Figure 1-1, DSP Exciter Isometric View*, for an overall view of the exciter.

Copyright © 1997 Glenayre

v0250.hgl

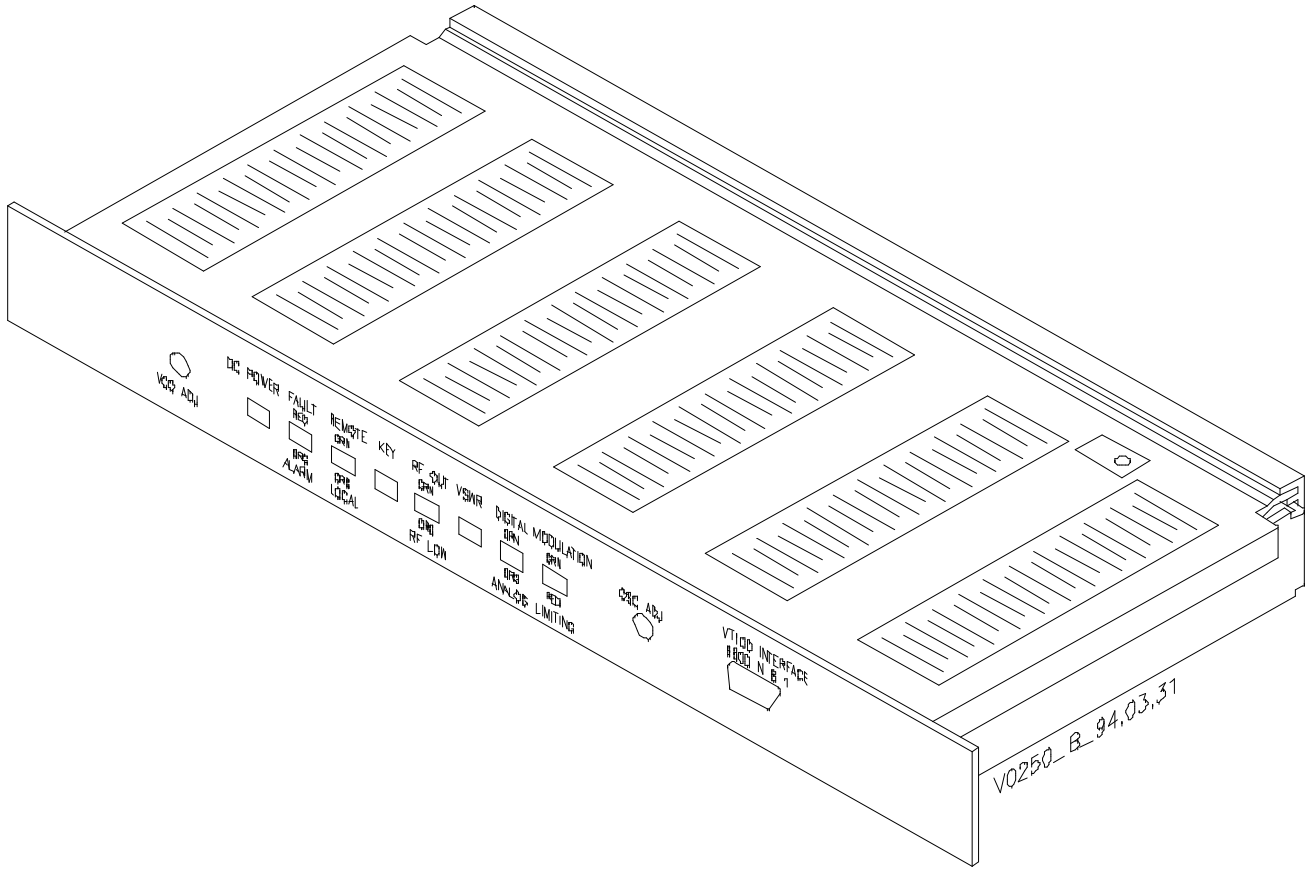

Figure 1-1 DSP Exciter Isometric View

Copyright © 1997 Glenayre

2 SPECIFICATIONS

Refer to *Table 2-1, Exciter Specifications*, which lists the DSP exciter specifications.

Where possible, EIA or I-EIS A measuring methods were used in determining specifications. Note that some specifications are not addressed by either set of standards or the prescribed methods were impractical.

Table 2-1 Exciter Specifications

sec_2

characteristic	condition	specification
adjacent-channel noise	25-kHz channel spacing, in analog mode	-85 dBc
	25-kHz channel spacing, in FSK mode	-75 dBc
alternate channel noise	25-kHz channel spacing	-95 dBc
spurious		-90 dBc
operating frequency range	determined by installed VCO/RF board	refer to Table 3-1
RF output power	keyed	250 mW nominal
carrier frequency stability	steady state, -30° to +60° C	10-MHz reference, int=0.005 ppm/yr, ext=0.1 ppm/yr
FSK frequency/modulation stability	relative to carrier frequency stability	+/- 10 Hz max
FSK adjustment accuracy		+/- 10 Hz
analog offset resolution		1 Hz
number of channels		up to 8, depending on interface board and controller
frequency spread		3 MHz at 900 MHz (12 MHz wideband option) 7.5 MHz at 450 MHz 5 MHz at 150 MHz
audio input	level	-25 to +10 dBm
	impedance with transformer	600 ohm or 5 kohms balanced
audio response	flat, 50 to 2800 Hz; not referenced to 1 kHz; 60% deviation	+/-0.5 dB
	preemphasized 6 dB per octave, 300 to 3000 Hz; 60% deviation	+/-0.75 dB

Copyright © 1997 Glenayre

Table 2-1 Exciter Specifications (continued)

characteristic	condition	specification
audio distortion (1-kHz reference at 60% deviation)	25-kHz channel spacing	less than 1.5%
audio response (tracking between units)	level	0.1 dB max
	delay	2 usec max
FM hum and noise (1-kHz reference at 60% deviation)	25-kHz spacing flat, 15-kHz bandwidth	-40 dB
	25-kHz channel spacing preemphasized, 300 to 3000 Hz	-55 dB
AM hum and noise	standard	-34 dB
modulation types		analog, 2-level FSK, 4-level FSK available with some interfaces
channel spacing		6.25 kHz
audio-backward compatibility		standard
emissions	FCC	15K0F2D, 16K0F1D, 16K0F3E
power requirement	22-29 Vdc	less than 3 A
humidity	noncondensing	0 to 95% relative
external 10-MHz reference input	level	2Vp-p min
	impedance	50 ohms
	spurious above 8 MHz	-65 dBc max
	spurious below 8 MHz	-50 dBc max
weight		4.8 lb (2.2 kg)
dimensions		8.75 in (22.25 cm) d x 19 in (48.25 cm) w x 1.75 in (4.5 cm) h
temperature range	operating (nonderated)	-30° to +60° C
	storage	-55° to +70° C
maximum elevation		to 10,000 ft (3050 m)

Copyright © 1997 Glenayre

sec_3

3 DESCRIPTION

3.1 Introduction

The DSP exciter contains a microprocessor that allows remote or local control of the exciter and consolidates logic for varying degrees of PA control and monitoring through a video display terminal (VDT). Operating characteristics of the exciter are controlled by the selection of hardware options. It is frequency selectable by specifying the appropriate internal frequency determining hardware and software. It is also capable of communicating with several operating protocols through the proper selection of interface boards.

3.2 Physical Description

The exciter front panel of one RU (1.75 in) in height contains eight LEDs, two adjustments, and one connector (also see section 5). The exciter chassis is nine inches deep and contains three circuit boards and space for an oscillator (not used with some controllers).

Refer to *Table 3-1, Part Numbers of VCO/RF Amplifier Boards*, which shows subassemblies used for various transmitter operating ranges.

Table 3-1 Part Numbers of VCO/RF Amplifier Boards

transmitter model	VCO/RF-amplifier board frequency band (MHz)	VCO board assembly part No.	control board assembly part No.
GL-T85/8601	929-941	263-0082-072	265-0082-001
	936-948	263-0082-070	265-0082-001
	924-936	263-0082-069	265-0082-001
GL-T85/8600	900-960 (wb)	263-0082-051/052/053/054/ 055/062	265-0082-024/032
	948-960	263-0082-055	265-0082-001
	936-948	263-0082-054	265-0082-001
	929-941	263-0082-068	265-0082-001
	924-936	263-0082-053	265-0082-001
GL-T8541	445-470	263-0084-003	not yet available
GL-T83/8531	320-330	263-0082-049	265-0082-001
GL-T83/8521	275-285	263-0082-047	265-0082-001
GL-T84/8611	167-175	2100.00094	265-0082-024
	162-172	2100.00093	265-0082-024

Copyright © 1997 Glenayre

Table 3-1 Part Numbers of VCO/RF Amplifier Boards (continued)

transmitter model	VCO/RF-amplifier board frequency band (MHz)	VCO board assembly part No.	control board assembly part No.
	157-167	2100.00092	265-0082-024
	152-162	2100.00091	265-0082-024
	147-157	2100.00090	265-0082-024
	142-152	2100.00089	265-0082-024
	138-148	2100.00088	265-0082-024

Refer to *Table 3-2, Part Numbers of Interface Boards*.

Table 3-2 Part Numbers of Interface Boards

DSP exciter-to-controller interface boards	interface board part No.
QT-1000 interface bd	265-0082-007
standard Interface bd	263-0082-036
I20 interface bd	265-0082-032

Refer to *Figure 3-1, DSP Exciter Rear View*, which shows the exciter rear panel. The back panel contains three BNC-type connectors J3/J7/J8, a DB-15 connector J6, and a terminal board TB1 as standard items. Other back panel connectors vary depending on which interface and I/O boards are installed. Figure 3-2, DSP Exciter Top View with Internal Controls and Indicators, shows a top view of the exciter with its cover removed.

Refer to *Table 3-3, Part Numbers of Interface I/O Boards*, which shows interface and I/O board part numbers. The I/O boards comprise the means to connect various controllers to the DSP exciter

..

Table 3-3 Part Numbers of Interface I/O Boards

interface I/O board (control type)	interface I/O board part No.
QT-1000 Interface I/O bd	261-0082-003
Standard Interface I/O bd	261-0082-004
I20 Interface I/O bd	pending

Copyright © 1997 Glenayre

Table 3-4 Assembly and Control Board Numbers

exciter assembly No.	**control board No.**
(wb) 2100.00085	265-0082-032
265-0082-021	265-0084-024

3.3 Simplified Block-Diagram Description

sec_3

Refer to *Figure 3-3, DSP Exciter Simplified Functional Diagram*, in the following discussion. Inputs from the transmitter controller usually are one or two data bits, two channel-select bits, and keying input. Outputs to the controller are keying output indicator, various fault outputs, forward-power sample, and reflected-power sample.

Copyright © 1997 Glenayre

v0343.hgl

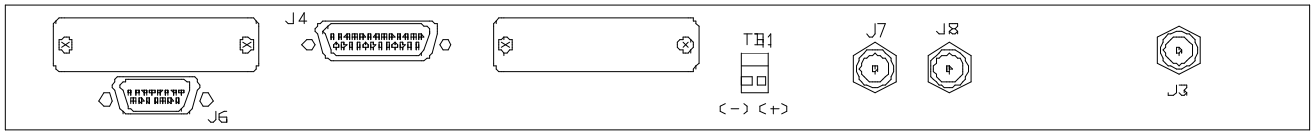

(DSP EXCITER W/STANDARD INTERFACE BOARD)

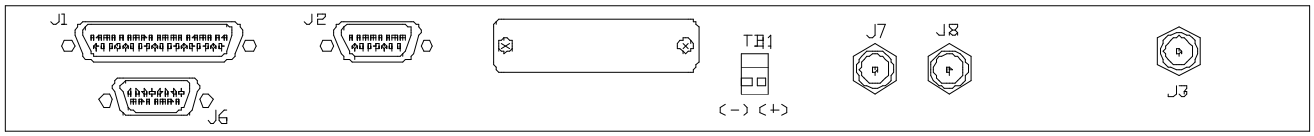

(DSP EXCITER W/C2000:I20 INTERFACE BOARD)

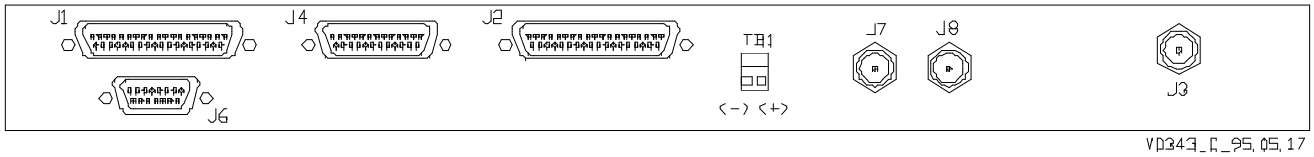

(DSP EXCITER W/QT-1000 INTERFACE BOARD)

Figure 3-1 DSP Exciter Rear View

Copyright © 1997 Glenayre

v0344.hgl

sec_3

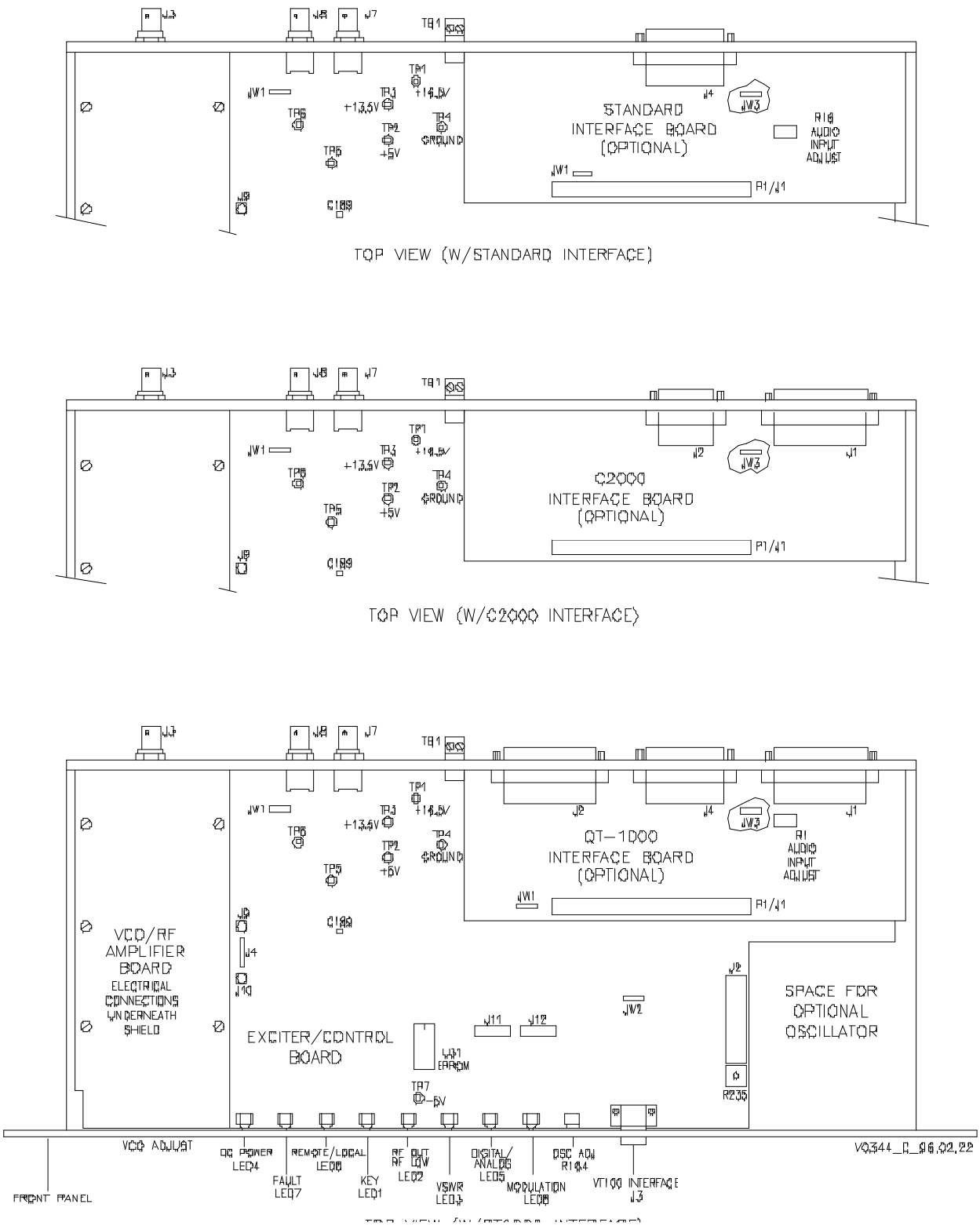

Figure 3-2 DSP Exciter Top View
with Internal Controls and Indicators

Copyright © 1997 Glenayre

v0251.hgl

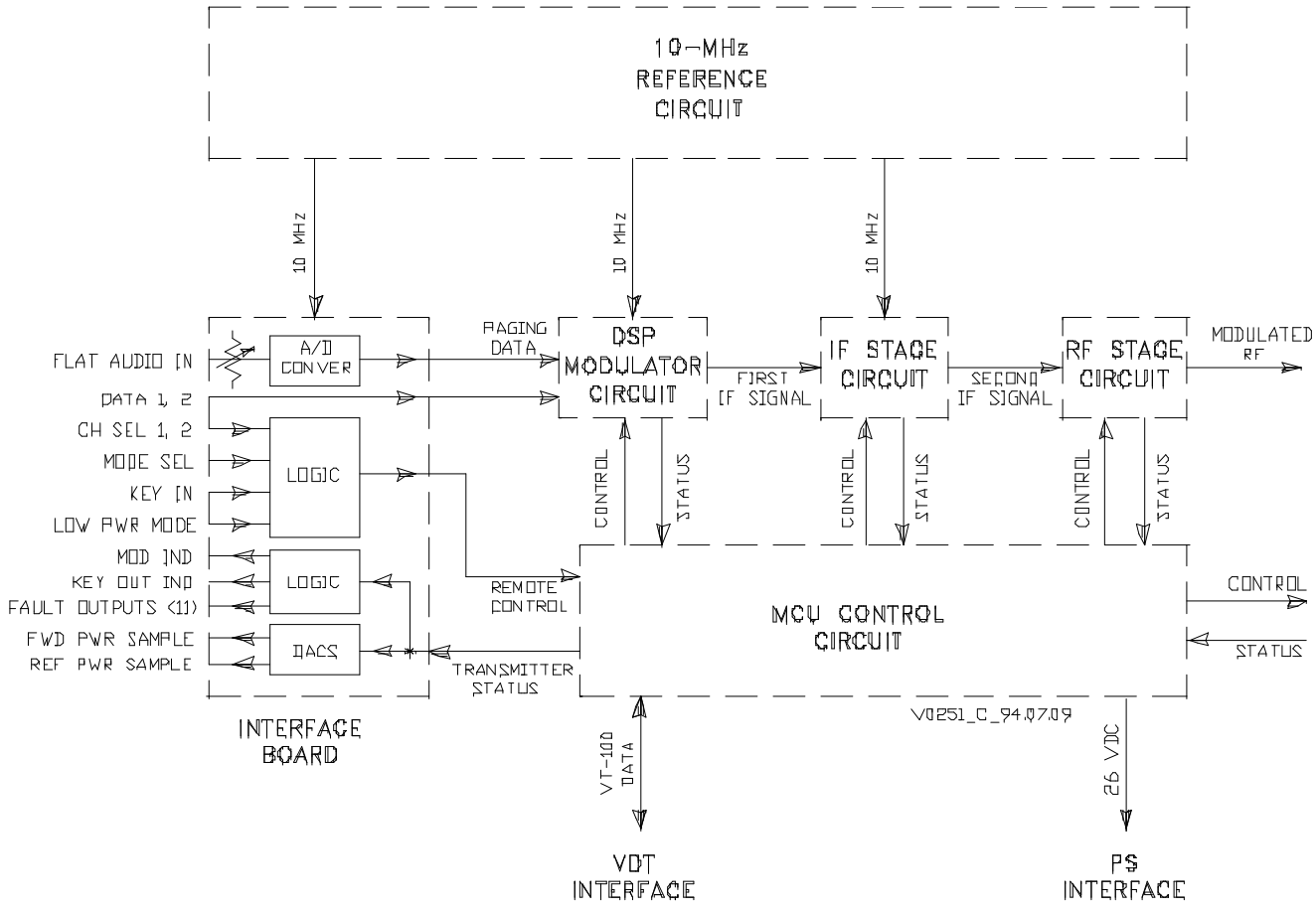

Figure 3-3 DSP Exciter Simplified Functional Diagram

Copyright © 1997 Glenayre

sec_4

4 INSTALLATION AND SETUP

4.1 Precautions and Hazards

Caution

PC boards within this assembly use static-sensitive components. Follow IC-handling precautions.

Caution

The exciter contains internal memory which is used to characterize exciter operation. Upon exciter replacement, ensure that replacement exciter contains appropriate items in its memory.

4.2 Test Equipment and Tools Required

Table 4-1, Test Equipment Required, lists required test equipment. Common hand tools may also be required for most procedures.

Table 4-1 Test Equipment Required

item	description
tuning tool	Johanson 8777 or equivalent
RF power meter	Bird model 8327 or equivalent with appropriate RF adapters
voltmeter	Fluke model 77 DVM or equivalent
RF dummy load	50-ohm load

4.3 Component and Adjustment Locations

Figure 3-3, DSP Exciter Simplified Functional Diagram, shows the location of assemblies, internal user-adjustable controls, and I/O locations. Note that most adjustments are performed via the front-panel VT100 interface.

4.4 Installation

4.4.1 Inspection

Inspect exciter to ensure air flow is not obstructed and cables and wires are securely fastened to their respective connectors.

Copyright © 1997 Glenayre

4.4.2 Power Requirement

The DSP exciter, when used as a component of a transmitter, draws its power from system wiring. Current draw is less than three amperes at 22 to 29 volts. It is normally powered by the transmitter power supply but can be powered by an auxiliary supply.

4.4.3 Input/Output Connections

Figure 3-3, DSP Exciter Simplified Functional Diagram, shows the locations of I/O connectors; *Table 4-2, DSP Exciter I/O Connectors*, lists I/O connectors and describes their functions. Normally the exciter is delivered as part of an entire transmitter and has already been installed in a rack, with all connections already made, except for connections to equipment that was not installed in the rack before shipment. If I/O connections are required, refer to the system-interconnect diagram and other instructions in the transmitter manual.

4.4.4 Signal Functions

See *Table 4-2, DSP Exciter I/O Connectors*, which references other tables that describe pin-by-pin functions of multipin connectors. *Figure 4-1, DSP Exciter/PA Control Circuit Boards Interconnection Diagram*, shows interconnections among internal assemblies.

Table 4-2 DSP Exciter I/O Connectors

stencil/connector	description	additional detail
VT100 INTERFACE: J3	VT100 interface to VDT (front)	*Table 4-3*
RF OUT: J3	RF out, on frequency	*Figure 6-1*
QT-1000 interface I/O J4	interface to QT-1000 interface board	*Table 10-1*
QT-1000 interface I/O J5	DB-9 connector, to receiver	*Table 10-2*
standard interface I/O J4	interface to standard interface I/O board	*Table 10-1*
GL-C2000 interface I/O J4	interface to GL-C2000 interface I/O board	
PA CONTROL: J6	connects to PA	*Table 4-4*
ISOLATOR IN: J7	VSWR input from PA	*Figure 3-1*
10 MHZ IN: J8	external reference input from interface	*Figure 3-1*
+26 VDC: TB1	exciter input power, +22-29 Vdc	*Figure 3-1*

Copyright © 1997 Glenayre

sec_4

Table 4-3 VT100 Interface Connector J3 Pin Assignments

J3-X (front)	signal	description
2	TXD	transmit data line
3	RXD	receive data line
5	GND	ground
1,4,6,7,8,9	not used	

Table 4-4 Control Board Connector J6 Pin Assignments

J6-X	signal	description	J6-X	signal	description
1	A/D1+	multiplex analog input from PA No. 1 multiplexer	9	A/D2+	multiplex analog input from PA No. 2 multi-plexer
2	A/D3+	multiplex analog input from PA No. 3 multiplexer	10	A/D4+	multiplexed analog input from PA No. 4 multi-plexer
3	AGC REF+	GC reference voltage output to PA, 1-12 Vdc	11	PA FAULT	PA fault input, HI=fault
4	PA GROUND	no connection	12	PA GROUND	no connection
5	PA GROUND	no connection	13	INPUT SELECT 1	one of four select outputs to PA multiplexers, LO=2^0 digit enabled for mux input decoder
6	INPUT SELECT 2/ KEY OUT	one of four select out-puts to PA multiplexers, LO=2^1	14	INPUT SELECT 3	one of four select outputs to PA multiplexers, LO=2^2 digit enabled for mux input decoder
7	INPUT SELECT 4/ KEY OUT	one of four select out-puts to PA multiplexers, not used	15	AUX LATCH ENABLE	latch-enable output to PA multiplexers, LO=mux input decoder reads the three select inputs
8	REF SAMPLE	reflected power sample input from PA			

4.4.5 Switches and Jumpers

Figure 3-2, DSP Exciter Top View with Internal Controls and Indicators, shows the locations of user-adjustable switches and jumpers. Refer to *Table 4-5* for a list of software related jumper positions found on the exciter/control board. No switches are available to maintenance personnel.

Copyright © 1997 Glenayre

Table 4-5 Exciter Control Board Jumper Positions

Jumper	pre version 2.10 software	version 2.10 software
JW1	set to A for external 10 MHz oscillator	set to A for external 10 MHz oscillator
	set to B for internal 10 MHz oscillator	set to B for internal 10 MHz oscillator
JW2	set to A for password protection	set to A for password protection
	set to B to bypass password protection	set to B to bypass password protection
JW3	set to A for external VSWR protection	always set to B (for internal and/or external VSWR protection)
	set to B for internal VSWR protection	

4.5 Setup

Note

When doing a setup for a wideband DSP exciter, the net channel change time must be set for 300 ms.

Refer to the DSP exciter VDT Menus and user manual for transmitter-control setup information. All setup is done via the front-panel VT100 interface.

4.6 Ultimate Disposition

Caution

This equipment may contain hazardous materials. Check with the local EPA or other environmental authority before disposing of this equipment.

Copyright © 1997 Glenayre

v0164.hgl

sec_4

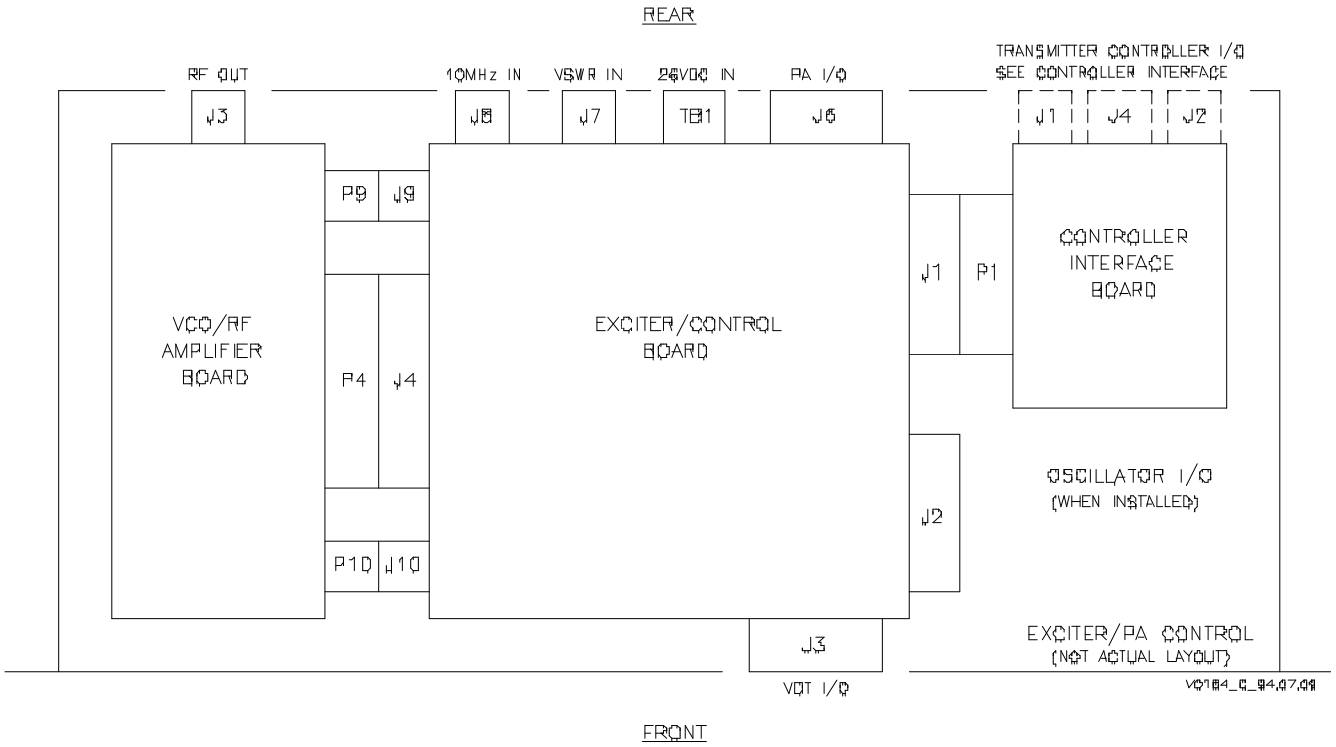

Figure 4-1 DSP Exciter/PA Control Circuit Boards Interconnection Diagram

Copyright © 1997 Glenayre

Copyright © 1997 Glenayre

5 OPERATION

5.1 Front-Panel Controls and Indicators

Refer to *Figure 5-1, Front-Panel Controls and Indicators*, which shows and describes front-panel indicators. The DSP exciter contains no front-panel controls. A front-panel access to VCO adjustment is for maintenance purposes only.

5.2 Operating Instructions

sec_5

The transmitter controller operates the exciter and transmitter in an unattended manner during normal system operation. The VT100 interface with a VDT enables the maintenance technician to perform maintenance and observe operational parameters. Refer to the DSP exciter VDT Menus and user manual for detailed operating information.

Copyright © 1997 Glenayre

v0079.hgl

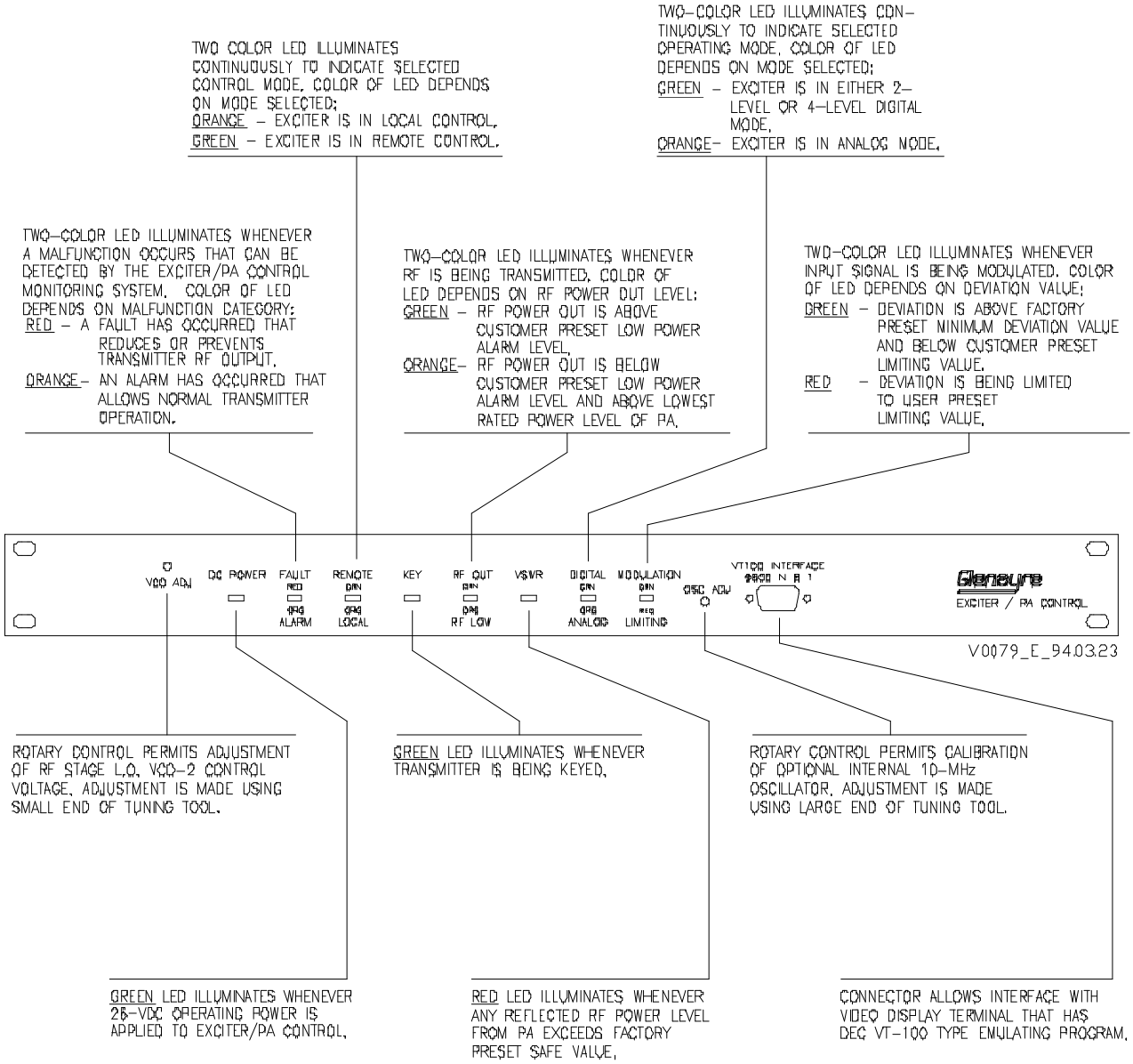

Figure 5-1 Front-Panel Controls and Indicators

Copyright © 1997 Glenayre

sec_6

6 THEORY OF OPERATION

6.1 Exciter/PA Control

Refer to *Figure 6-1, DSP Exciter RF Stage Functional Diagram*, which describes the signal flow in the DSP exciter with the transmitter controller interface. The following major paragraphs describe the operation of the major items within the figure. Additional detailed figures are referenced, as required.

6.1.1 Reference Source

The ten-MHz reference signal is provided by the transmitter controller or by an optional internal reference oscillator. All other inputs and outputs, except for RF output, are routed through the interface board.

6.1.2 Main Circuit Frequencies

The VCO/RF amplifier board installed determines the frequency for the RF output. *Table 6-1, Exciter RF/Main Circuit Frequencies* lists VCO/RF amplifier board frequencies and the corresponding exciter/output frequencies.

Table 6-1 Exciter RF/Main Circuit Frequencies

exciter output frequency (MHz)	first IF frequency (kHz)	second IF frequency (MHz)	VCO-1 frequency (MHz)	VCO-2 frequency (MHz)
900-960	100	90	89.9	810-870
445-470	100	90	89.9	355-380
275-330	100	90	89.9	365-420
130-180	100	90	89.9	220-270

6.1.3 Controller Interface Connector Functions

Refer to *Table 4-2, DSP Exciter I/O Connectors* and subsequent tables for a pin-by-pin description of signal functions. The exciter interfaces with the transmitter controller through the exciter interface I/O board. Connector P4 on the internal interface board connects directly to J4 on the exciter. Alarm signals, consisting of transmitter alarm, fault, and status signals, are supplied directly to the transmitter controller.

Copyright © 1997 Glenayre

v0123.hgl

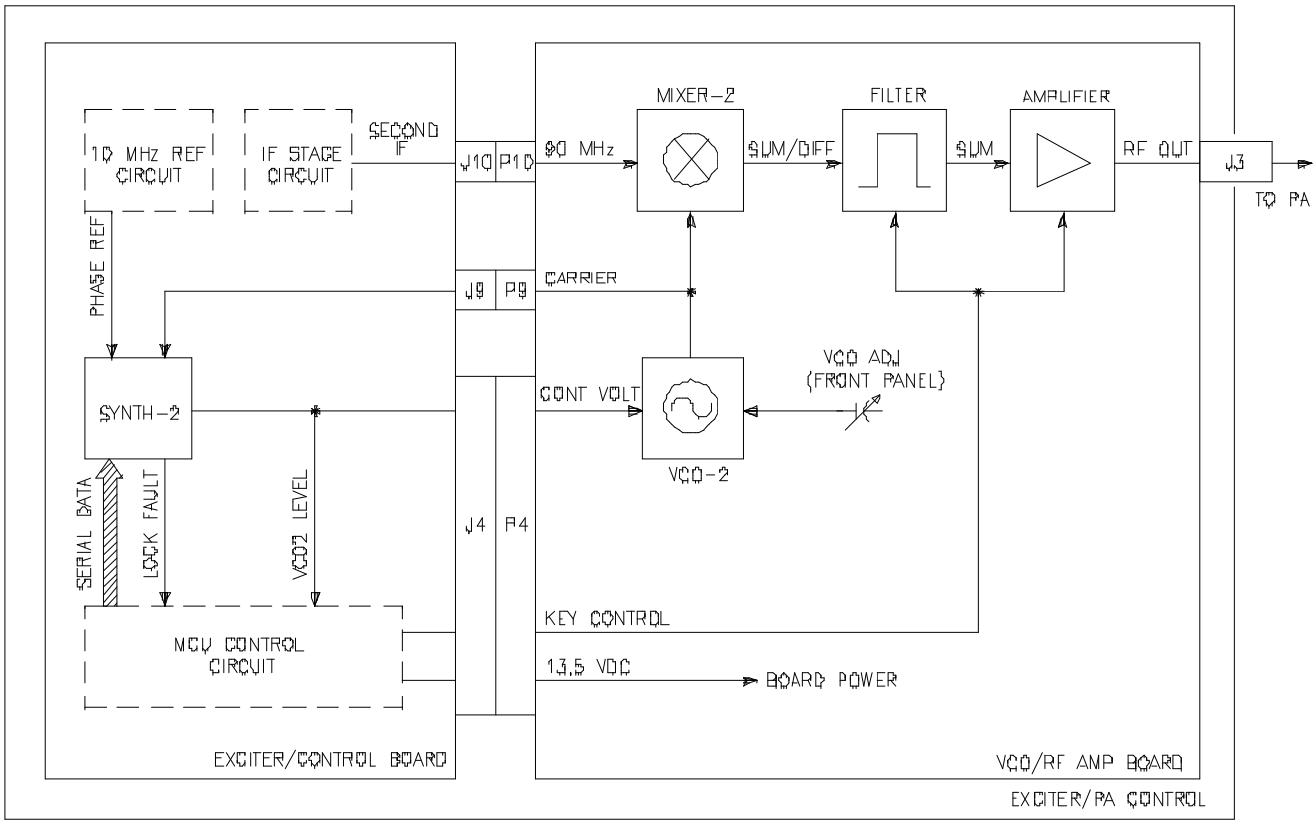

Figure 6-1 DSP Exciter RF Stage Functional Diagram

Copyright © 1997 Glenayre

sec_6

6.2 Interface to Controller

6.2.1 General

The controller interface is the portion of exciter circuitry that connects the transmitter controller to the exciter. The interface board dictates what kind of transmitter controller may operate the transmitter. The transmitter can be operated through one of several controllers depending on which interface board is installed in the exciter. The internal interface board may also exhibit an external I/O board.

Control commands from the transmitter controller are connected through the interface circuit. This circuit supplies remote control to the microcontroller unit (MCU) control circuit. The VT-100 VDT supplies local control. The MCU control circuit generates all control signals for the other circuits, and monitors their status. The MCU control circuit reports status back to the VT-100 VDT and the interface circuit, which supplies the status to the transmitter controller.

6.2.2 Interface Conversion Functions

Some signals exchanged between the controller and the exciter originate with a format, voltage, or requirement incompatible with their destination. The interface performs any signal conversions necessary to provide compatibility between the controller and the exciter. None, some, or all of the following conversion functions may be done by any one particular interface board.

6.2.2.1 Analog-Mode A/D Conversion

The DSP modulator circuit reads synchronized serial data for its analog mode input signal. if the transmitter controller provides an analog signal, the controller interface converts the analog to the appropriate data form for the DSP. The analog (FLAT AUDIO+, -) terminates across a balanced input circuit that also provides a level adjustment. The adjustment, when properly set by the AUDIO INPUT ADJUST pot through the exciter cover, provides analog to an A/D converter at the optimum zero-dBm level. The A/D converts the analog into serial data, which is applied to the DSP through a synchronous data link. A synchronous data link is characterized by an exchange of pulse streams for timing purposes. The A/D converter is clocked by a pulse generator circuit driven by the ten-MHz reference circuit.

6.2.2.2 FSK-Data-Bit Strapping

The DSP modulator circuit can read up to four bits for its digital FSK mode input signal. If the controller provides only bit 1 (DATA 1), operation in the four-level mode or higher is precluded. Bits 2 through 4 (DATA2 through DATA4) are available as FSK data inputs; whether they are used or not is a function of the particular controller interface used and the transmitter controller. Refer to Section 10. The controller interface disables unused bits by ground straps.

Copyright © 1997 Glenayre

6.2.2.3 Channel-Select-Bit Strapping

The MCU control circuit reads three bits to determine the remotely selected channel. If the controller provides only bits 1 and 2 (CH SEL 1, 2), the controller can command only four channels. The operation of bit 3 is a function of the controller interface. Refer to Section 10.

6.2.2.4 Mode-Select-Bit Strapping

The MCU control circuit reads two bits to determine the remotely selected mode. If the controller provides only bit 1 (MODE CONTROL), the controller can command only two transmitter modes. The operation of bit 2 is a function of the controller interface. Refer to Section 10. If the controller interface does not use bit 2, it straps it to ground (low).

6.2.2.5 Power Sample D/A Conversion

The controller reads sample voltages for its forward and reflected power sample inputs, which are stored as data in the MCU control circuit. In some cases the controller interface converts the data to voltages of the appropriate range for the controller. Data from the MCU representing the forward and reflected powers is written into a dual D/A converter, which converts the data into two proportional dc voltages, which are applied to the controller. Control logic gates ensure that data is written to the proper half of the D/A converter.

6.3 DSP Modulator

6.3.1 General

The DSP modulator circuit converts the data into the first IF signal, which is fully modulated. The IF stage circuit converts the first IF signal into the second IF signal. The RF stage circuit converts the second IF signal into the RF output. Ten MHz is used as frequency reference by each conversion stage. The DSP modulator is the portion of exciter circuitry between the controller interface and the IF stage. The DSP modulator uses digital signal processing to modulate and up-convert the paging information into the first IF signal. The modulation type depends on the transmitter operating mode. The IF stage is the portion of exciter circuitry between the DSP modulator and the RF stage. The IF stage uses heterodyne mixing to generate the optimum second IF signal frequency, which depends on the requirement of the VCO/RF amplifier board installed. The MCU control circuit is the command and control hub of the transmitter. The type of control software depends on the transmitter frequency and power output. The following text describes main exciter circuitry that works for all software programs, modulation schemes, and IF signal frequencies. *Figure 6-2, DSP Exciter MCU Circuit Functional Diagram* shows additional details.

6.3.2 DSP Modulator Signal Flow

Refer to *Figure 6-2, DSP Exciter MCU Circuit Functional Diagram*, in the following discussion. The inputs that provide the paging information to the DSP modulator circuit are digitized audio and FSK data, supplied by the controller interface circuit through connector pair P1/J1. Digitized audio arrives as serial data. FSK data arrives as parallel data. The DSP modulator circuit processes the digitized audio in the analog mode or the FSK data in the digital mode. The result of this processing is the exciter's first IF signal, which is applied

Copyright © 1997 Glenayre

to the IF stage circuit. To produce the first IF signal, the DSP modulator contains two DSPs (a signal modulator and a quadrature modulator), a digital-to-analog converter, and a read-only memory. The following text describes these four components and their signal flow.

6.3.2.1 Digital Signal Modulator

The signal modulator (SM) generates modulation that contains the paging information, which is supplied by digitized audio or FSK data. The digitized audio is input into a serial input port. An external edge detector is required to input the FSK data. The SM converts one of the data inputs into a modulated signal, which is mathematically represented within the SM as a vector signal, defined by its rectangular coordinates. These coordinates, commonly known as I and Q, are supplied to the digital quadrature modulator as 16-bit parallel data. The modulated signal output from the SM depends on the following signal characteristics:

- modulation scheme
- frequency response or rise time
- input logic or data inversion
- deviation level or bandwidth
- offset from carrier frequency
- analog gain and deviation limit

The SM also performs all communications between the DSP modulator circuit and the MCU control circuit. These communications are through the SM 16-bit parallel data port. External input and output latches expand the capabilities of this port. Control inputs consist of commands such as reset, request status, set paging signal parameter, change mode, and boot program. Requested status outputs consist of current mode, deviation levels, input level, input gain, modulation detected, and current polarity. Nonrequested status outputs indicate the existence of analog limiting and modulation.

6.3.2.2 Digital Quadrature Modulator

The digital quadrature modulator (DQM) performs interpolation and up-conversion of the modulated signal. The modulated signal input to the DQM is applied by the SM as I and Q components (16-bit parallel data). The DQM performs trigonometric computations at a much higher sampling rate, which determines the first IF signal value and frequency. The modulated signal output from the DQM is supplied from its serial data port to the D/A converter.

6.3.2.3 Digital-to-Analog Converter

The digital input to the digital-to-analog (D/A) converter is the modulated signal from the DQM. This data arrives as serial data. The analog output from the D/A converter is the first IF signal. In addition to the IF stage circuit, the first IF signal is supplied to the MCU control circuit, where it is rectified and filtered to generate fault logic.

Copyright © 1997 Glenayre

v0083.hgl7

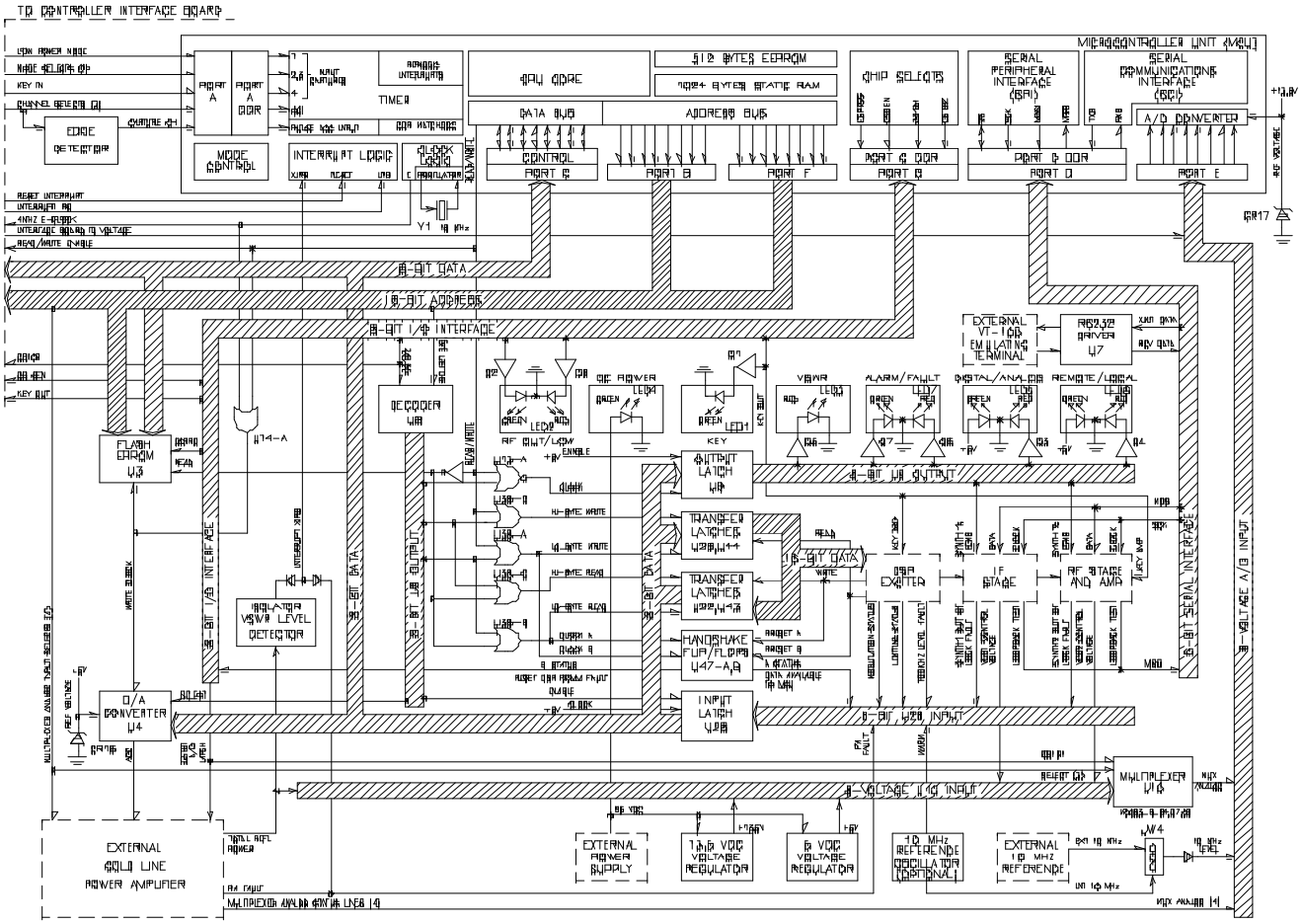

Figure 6-2 DSP Exciter MCU Circuit Functional Diagram

Copyright © 1997 Glenayre

sec_6

6.3.2.4 Read-Only Memory

A programmable and erasable read-only memory (PEROM) stores the modulator programs for both DSPs. These programs are transferred to the SM when the exciter is booted up (powered up), then the SM transfers the program to the DQM. The nonvolatile PEROM retains its program for years. Its memory may be individually reprogrammed without erasing the entire chip.

6.4 IF Stage

Refer to *Figure 6-1, DSP Exciter RF Stage Functional Diagram*. The input to the IF stage is the first IF signal, which is supplied by the DSP modulator circuit. The first IF signal carries all the paging information on an intermediate carrier frequency. The IF stage performs direct up-conversion of the first IF signal to create the second IF signal, which carries the same paging information as the first IF signal, but on a higher carrier frequency. The second IF signal is applied to the RF stage through connector pair J10/P10. To produce the second IF signal, the IF stage contains mixer-1 and filter circuits. Supporting these circuits are VCO-1 and synthesizer-1 circuits. *Figure 6-2, DSP Exciter MCU Circuit Functional Diagram*, and *Figure 6-3, DSP Exciter-to-Controller Functional Diagram*, show additional detail.

6.4.1 Mixer-1

Mixer-1 is the first heterodyne mixer. Inputs to mixer-1 are a modulated IF and a carrier. The modulated IF input is the first IF signal. The carrier input is supplied by VCO-1. The output from mixer-1 consists of two modulated carriers that are sums and difference frequencies of the inputs. These two frequencies are applied to the filter circuit.

6.4.2 Filter

The filter is centered at the second IF signal frequency with a 45-kHz bandwidth. The input to the filter consists of two modulated carriers. These are sum and difference frequencies supplied by mixer-1. The output from the filter is only the sum frequency. This modulated output is the second IF signal.

6.4.3 VCO-1

VCO-1 is the local oscillator for the IF stage. The input to VCO-1 is a dc control voltage. This voltage controls VCO-1 carrier frequency and is supplied by synthesizer-1. The output from VCO-1 is a sine-wave carrier. The output is applied to mixer-1.

6.4.4 Synthesizer-1

Synthesizer-1 controls VCO-1 carrier frequency by means of a phase-locked loop (PLL). PLL inputs are a carrier and a phase reference. The reference input is a ten-MHz carrier supplied by the ten-MHz reference circuit. The carrier input is from VCO-1. The PLL output is a dc control voltage. This voltage, set to cause the VCO-1 carrier to lock phases with the reference, is supplied to VCO-1.

Copyright © 1997 Glenayre

Synthesizer-1 also performs all communications between the IF stage circuit and the MCU control circuit. A control input specifies the VCO-1 carrier frequency; this data is received over a serial data link when the exciter is booting or changing channels. Status outputs are a lock fault and a VCO1 level. The lock fault indicates loss of the carrier/reference phase lock. The VCO1 level is the VCO-1 control voltage.

6.5 MCU

Refer to *Figure 6-4, DSP Exciter Detailed Functional Diagram*. Control outputs are supplied by the MCU control circuit to the other functional circuits. Likewise, status inputs are applied to the MCU control circuit from the other functional circuits. Discussions of these control and status signals are included with the information on the other major functional circuits. To interface these control and status signals, the MCU control circuit contains an MCU, D/A converter, 8/16 bit converter, read-only memory, and a VSWR-fault detector. To light the front-panel LEDs, the MCU control circuit contains a bank of PNP switching transistors.

Refer to *Figure 6-2, DSP Exciter MCU Circuit Functional Diagram*, in the following text which describes this circuitry and its signal flow.

6.5.1 Microcontroller Unit (MCU)

The MCU contains a central processing unit (CPU), memories, peripherals, and other hardware on a single chip. The primary internal functions of the MCU and their application in the exciter are described in the following list.

- An eight-bit remote input port accepts discrete low power mode, emission mode, keyline, and channel selects from the controller interface circuit. An external edge detector is required to input the channel selects.
- Interrupt logic stops RF transmission when a fault or reset input is received, e.g. a VSWR or PA fault.
- An on-board oscillator/clock generator, driven by an external crystal, times internal MCU functions. A synchronized clock output times external functions.
- The MCU performs most interfacing through a parallel communications link: eight-bit data bus, sixteen-bit address bus, and a read/write line. External input and output latches expand the capability of this link.
- An eight-bit input/output port supplies discrete keyline, RF status, and chip select controls to the exciter and the PA.
- A serial peripheral interface (SPI) supplies synchronous serial frequency data to the IF stage and RF stage circuits. Individual commands load the program into either IF stage's synthesizer-1 or RF stage synthesizer-2.
- An 8-input analog-to-digital (A/D) converter measures voltage inputs from the exciter and the PA. An external multiplexer expands MCU analog inputs to fifteen.
- A serial communications interface (SCI) exchanges asynchronous serial RS-232 data with the VT-100 VDT. An external RS-232 driver buffers the MCU data, allowing it to be exchanged through external connector J3.
- A random-access memory (RAM) temporarily stores transmitter fault and alarm values.

Copyright © 1997 Glenayre

- An electrically-erasable read-only memory (EEPROM) permanently stores transmitter signal parameters.

6.5.2 Digital-to-Analog (D/A) Converter

A D/A converter generates an AGC reference voltage. The D/A converter inputs are data and select logic. The data, supplied by the MCU when the D/A is selected, represents the desired transmitter power output. The D/A converter output is an AGC reference voltage. This voltage represents a level proportional to the desired transmitter power output. The AGC reference voltage, output through connector J6, is used by the PA to generate an AGC voltage.

6.5.3 8/16-Bit Converter

An 8/16-bit converter allows the MCU eight-bit data bus to communicate with the 16-bit data bus of the DSP modulator circuit. The MCU must perform two read or write procedures, a low byte and a high byte, to each one of the DSP modulator circuit. The converter provides two status outputs to the MCU and the DSP modulator circuit. A data-available-to-MCU status indicates that the DSP modulator circuit has written data into the converter that the MCU must read. A data-available-to-DSP status indicates that the MCU has written data into the converter that the DSP modulator circuit must read. In the event that the DSP modulator circuit does not read data that the MCU has written, a DSP communications fault is generated.

6.5.4 Read-Only Memory

A programmable and erasable read-only memory (PEROM) stores the control program for the transmitter. This program is transferred to the MCU when the exciter is booted up. The nonvolatile PEROM retains its program for years. Its memory may be individually reprogrammed without erasing the entire chip.

Copyright © 1997 Glenayre

v034517

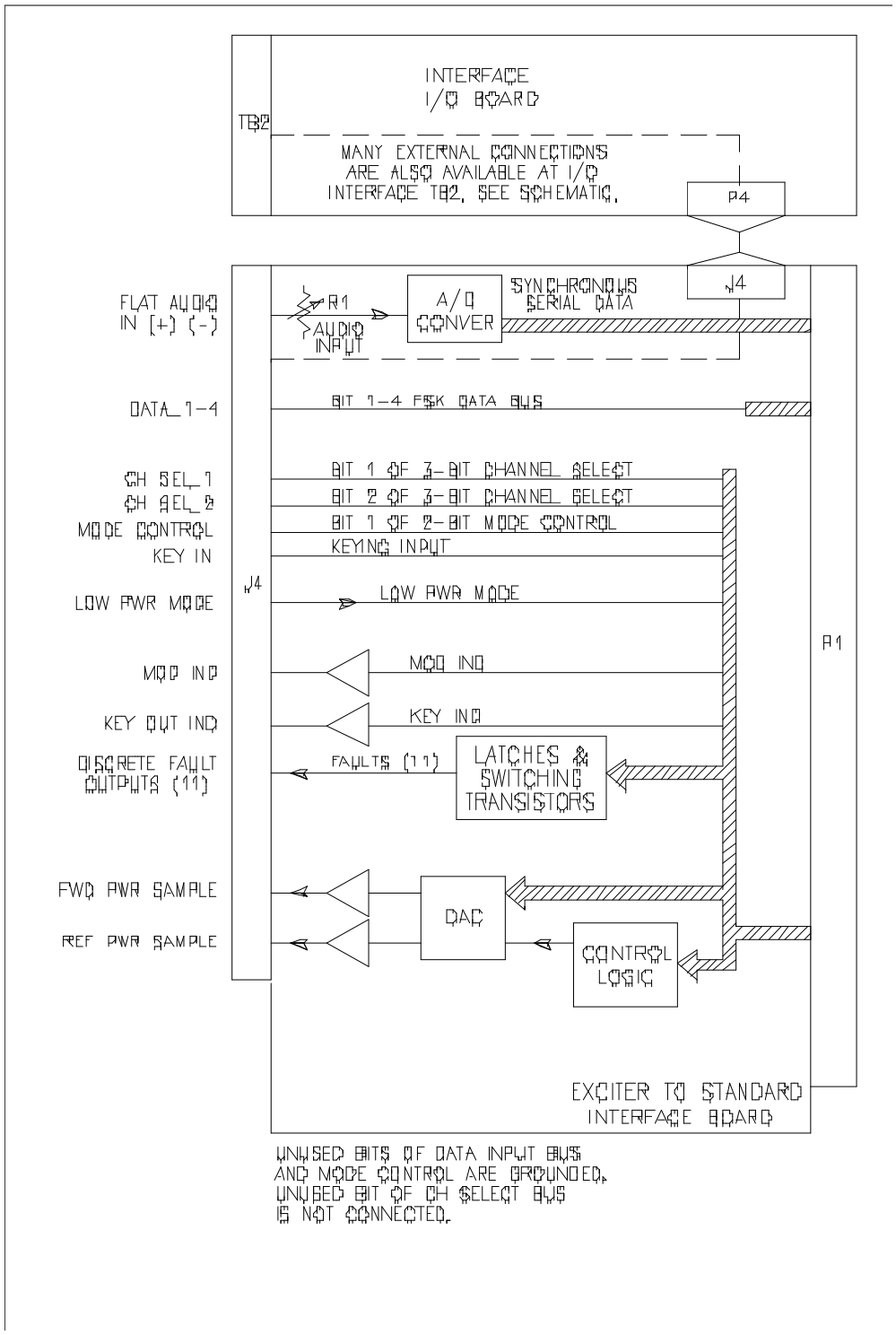

Figure 6-3 DSP Exciter-to-Controller Functional Diagram

Copyright © 1997 Glenayre

v0345R.hgl

sec_6

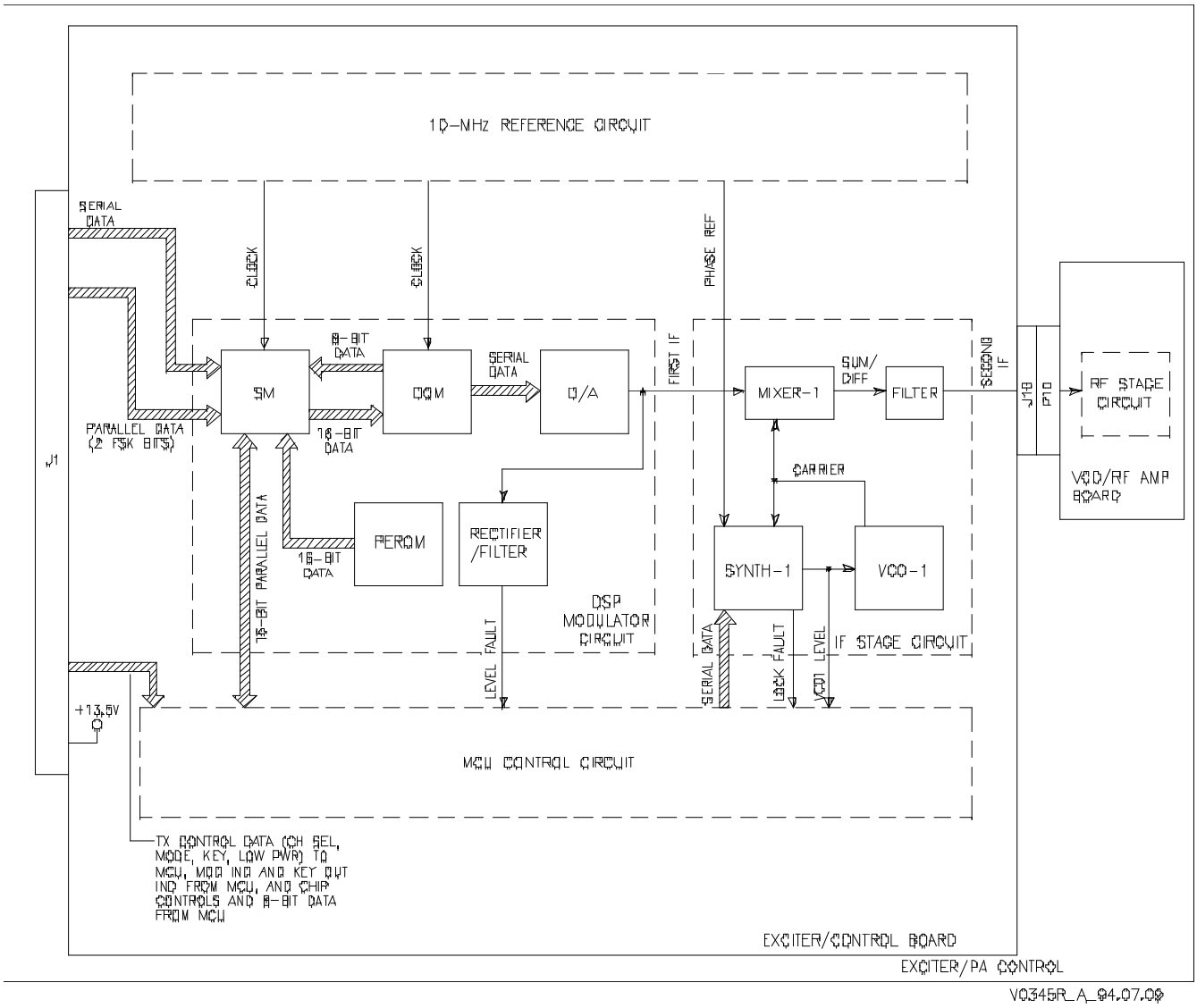

Figure 6-3 DSP Exciter-to-Controller Functional Diagram (Continued)

Copyright © 1997 Glenayre

v0081.hgll

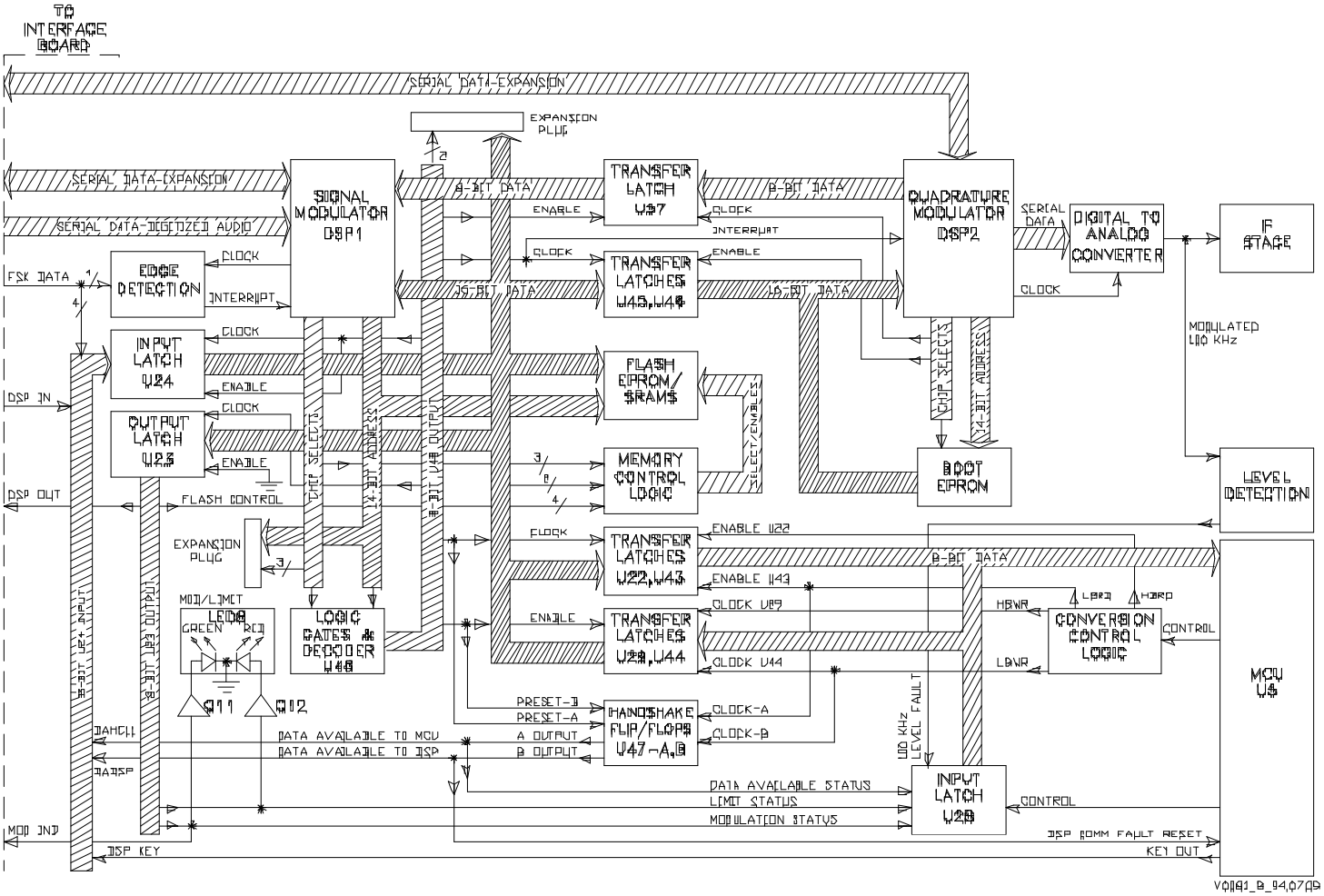

Figure 6-4 DSP Exciter Detailed Functional Diagram

Copyright © 1997 Glenayre

v0077.hglr

sec_6

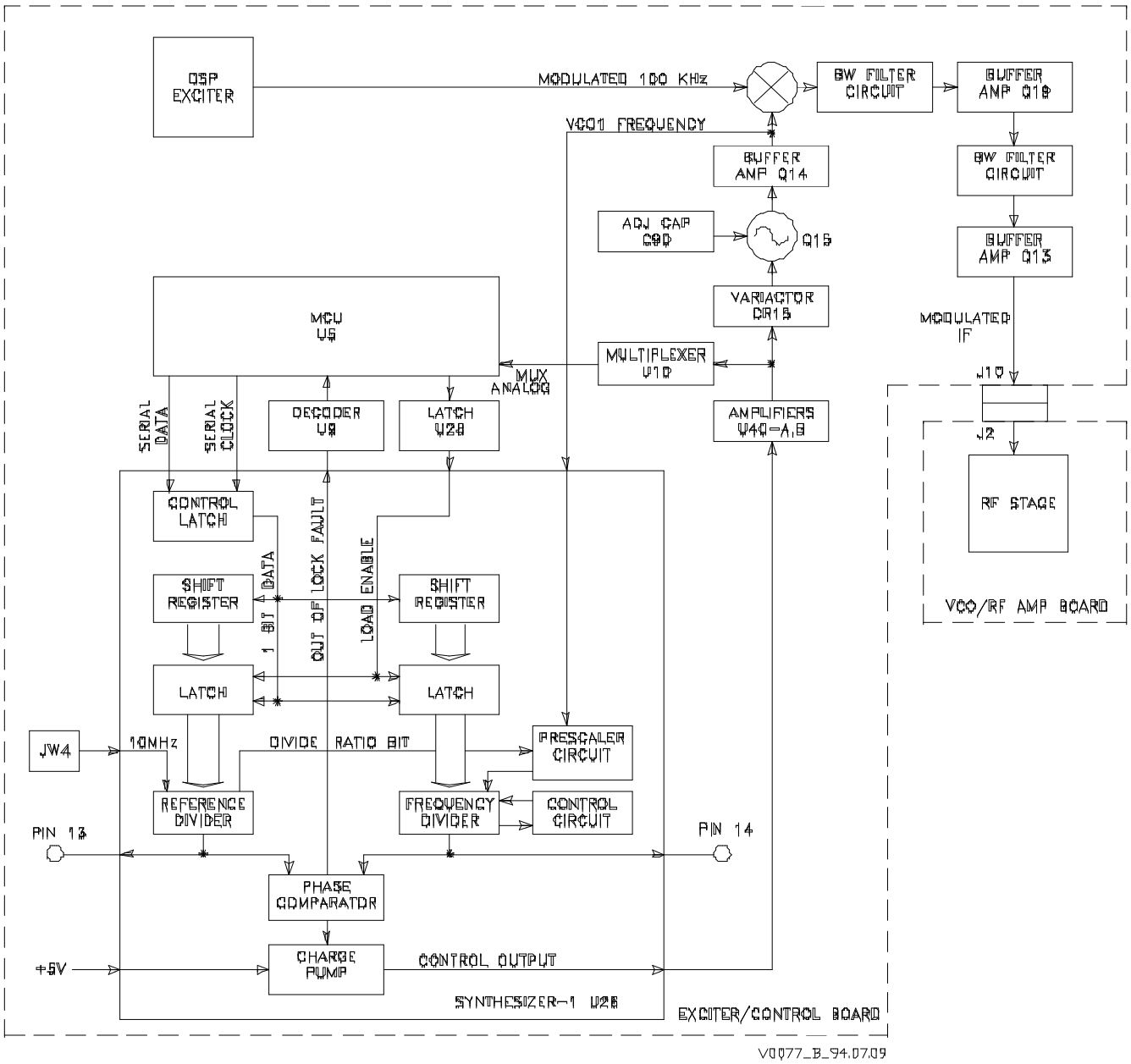

Figure 6-5 DSP Exciter IF-Stage Detailed Functional Diagram

Copyright © 1997 Glenayre

6.5.5 VSWR-Fault Detector

The exciter receives a VSWR signal from the PA through connector J7. This signal is a rectified dc voltage sample generated by the isolator. The voltage sample is monitored by the MCU to provide the value for the total reflected-power indication. The voltage sample is also monitored by a fault circuit in the exciter. If a factory-preset voltage is exceeded, the fault circuit shuts down the transmitter by an interrupt to the MCU.

6.5.6 Alarm Data-to-Logic Conversion

The transmitter controller reads logic alarm inputs; most of these alarms are stored as data in the MCU control circuit. If the controller interface converts the data to individual logic signals for the controller, data from MCU control representing the alarms is clocked into a pair of latches. The latches convert the data into continuous logic signals. These signals and others control a bank of NPN switching transistors that supply the actual logic signal to the controller. Control logic gates convert chip controls from the MCU into a clock input for the latches.

6.6 RF Assemblies

6.6.1 RF Stage Location

Refer to *Figure 3-3, DSP Exciter Simplified Functional Diagram*, to locate the assembly. The RF stage circuits are located on two circuit boards, both housed within the exciter chassis.The exciter/control board is the main circuit board and the VCO/RF amplifier board is a selected option. The exciter/control board connects to the VCO/RF amplifier board through three connector pairs: J4/P4, J9/P9, and J10/P10. The VCO/RF amplifier board also contains BNC connector J3, which extends through the rear panel of the exciter. This board contains most of the RF stage components inside an RF shield. A hole in the shield and the front panel provide access to an RF stage adjustment, which is marked **VCO ADJ** on the front panel.

6.6.2 RF Assemblies

6.6.2.1 RF Stage Description

The RF stage is the portion of exciter circuitry between the IF stage and RF out and is the final major functional circuit, the RF stage determines the transmitter RF output frequency, and dictates the highest and lowest possible RF output frequencies (RF band). The transmitter can be operated at several RF bands, depending on the RF stage circuitry installed in the exciter.

6.6.2.2 RF Stage Bands

The selected VCO/RF amplifier board determines the RF band of the transmitter. *Table 3-1, Part Numbers of VCO/RF Amplifier Boards*, lists the RF bands and the part number of the board with that RF band.

Copyright © 1997 Glenayre

sec_6

6.6.2.3 RF Stage Signal Flow

Refer to *Figure 6-1, DSP Exciter RF Stage Functional Diagram*. The input to the RF stage is the second IF signal, supplied by the IF stage circuit through connector pair J10/P10. The second IF signal carries the paging information on a modulated carrier at the exciter's second intermediate frequency. The RF stage converts the second IF signal into the exciter's RF output. This RF output carries the same paging information as the second IF signal, but on a modulated carrier of radio frequency. The RF output is normally applied to the PA through connector J3. To produce the RF output, the RF stage contains mixer-2, a filter, and an amplifier. Supporting these circuits are VCO-2 and synth-2. The following text describes these five circuits and their signal flow.

6.6.2.3.1 Mixer-2

Mixer-2 is the second heterodyne mixer. Inputs to mixer-2 are a modulated IF and a carrier. The modulated IF is the second IF signal. The carrier is supplied by VCO-2. Output from mixer-2 consists of sum and difference frequencies of the inputs. The sum frequency is centered near the channel carrier, and the difference frequency about twice the second IF frequency below that. These two modulated RF carriers are applied to the filter circuit.

6.6.2.3.2 Filter

The filter is factory-selected and tuned, with a bandwidth determined by carrier frequency of the transmitter. The inputs to the filter consist of two modulated RF carriers and a key control.The two carriers are sum and difference frequencies, supplied by mixer-2. The key control is supplied by the MCU control circuit through J4/P4. The output from the filter, supplied when the key control is received, is only the sum frequency. This modulated RF, centered near the channel on-frequency, is supplied to the amplifier.

6.6.2.3.3 Amplifier

The amplifier provides amplification to the value listed in the specifications as exciter RF power out. The inputs to the amplifier consist of modulated RF and a key control. The modulated RF, mixer-2 sum output frequency, is supplied through the filter. Key control is supplied by the MCU control circuit through J4/P4. Output from the amplifier, supplied when the key control is received, is an amplified version of the modulated RF. This amplified output is the exciter RF output.

6.6.2.3.4 VCO-2

VCO-2 is the RF stage local oscillator. Inputs to VCO-2 are a dc control voltage and an adjustment. Dc control voltage is supplied by synthesizer-2. The adjustment, which varies the VCO2 control voltage level, is controlled through the front-panel VCO ADJ access. This control provides the means for VCO-2 to output a carrier frequency that would otherwise be beyond the range of the control voltage input. The carrier output, always second IF frequency below the channel carrier frequency, is applied to mixer-2.

Copyright © 1997 Glenayre

6.6.2.3.5 Synthesizer-2

Synthesizer-2 controls VCO-2 carrier frequency by means of a phase-locked loop (PLL). PLL inputs to synthesizer-2 are a carrier and a phase reference. The reference is a ten-MHz carrier supplied by the ten-MHz reference circuit. The carrier is the VCO-2 output. The PLL output from synthesizer-2 is a dc control voltage. This voltage, set to cause VCO-2 to lock phases with the reference, is applied to the VCO-2 control input.

Synthesizer-2 also performs all communications between the RF stage circuit and the MCU control circuit. A control input to synthesizer-2 specifies VCO-2 carrier frequency. This data is received over a serial data link when the exciter is booting or changing channels. Status outputs from synthesizer-2 are a lock fault and a VCO2 level. The lock fault indicates loss of the carrier/reference phase lock. VCO2 level is the VCO-2 control voltage.

6.7 Voltage Regulator Circuit

Refer to *Figure 6-4, DSP Exciter Detailed Functional Diagram* (center, toward bottom) in the following discussion. The exciter receives 26-volt operating power through terminal board TB1. The dc power indicator on the exciter front panel is connected to this input. This voltage is supplied to a 26-volt bus and is monitored by the MCU. An intermediate regulator reduces the 26 volts to 16.5 volts, which is supplied to the two final regulators. One regulator generates 13.5 volts, which is supplied to a 13.5-volt bus and monitored by the MCU. The other regulator generates 5 volts, which is supplied to a five-volt bus and monitored by the MCU.

Copyright © 1997 Glenayre

7 MAINTENANCE

sec_7

7.1 Location of Maintenance Procedures

The DSP exciter is central to performing transmitter maintenance. Most maintenance of electrical assemblies is done via the VT100 interface. Any maintenance procedures which require adjusting controls within the exciter chassis are listed in this section.

Replace the exciter if it has input power, as indicated by the front-panel LED, but does not allow the user to make connection via the VT100 interface.

7.2 Test Equipment Required

Table 4-1, Test Equipment Required, lists test equipment required to perform maintenance procedures.

7.3 VCO-2 Adjustment Procedure

Perform the VCO-2 adjustment procedure after installing new VCO/RF amplifier board or after setting new channel carrier frequency. If the transmitter is to operate at more than one frequency, perform the multichannel adjustment procedure. If the transmitter is to operate at only one frequency, perform the single-channel adjustment procedure. Refer to the DSP exciter VDT manual as necessary.

7.3.1 VCO-2 Multichannel Adjustment Procedure

1. Set up VT-100 VDT and select local control (see VDT manual).
2. Select transmitter channel of lowest frequency if not already selected.
3. Use tuning tool supplied to adjust **VCO ADJ** control through exciter front panel. Adjust for a reading of 4.0 volts (3.5 volts for wideband VCO 263-0082-062), on VCO2 status display.
4. Return transmitter to service.

Procedure is complete.

7.3.2 VCO-2 Single-Channel Adjustment Procedure

This procedure does not apply to wideband option.

1. Set up VT-100 VDT and select local control (see VDT manual).
2. Select transmitter channel of operating frequency if not already selected.
3. Use tuning tool supplied to adjust **VCO ADJ** control through exciter front panel. Adjust for reading of 5.0 Vdc on VCO2 status display.
4. Return transmitter to service.

Procedure is complete.

Copyright © 1997 Glenayre

7.4 Over-The-Link Downloading

Over-the-link (OTL) code downloading allows C2000 transmitter controller (C2000) software, alarm matrix setup, and exciter software to be downloaded over the C2000 link channel.

To properly use OTL downloading, C2000 units must be programmed for the correct control group, site ID, and unit ID, which are integral to C2000 hardware and software. When information is downloaded over the link channel, the control group, site IDs and/or unit IDs that are to receive the code must be specified.

Caution

If the control group, site ID, and unit ID are not specified, all units in the system accept the download information. In a mixed system, this can result in some of the transmitters being off the air. An example of this would be a GL-T8600 exciter receiving a GL-T8500 exciter programming code. The GL-T8600 exciter would not operate with this software and could result in a site visit to correct the problem.

Programming of control groups and site IDs is done via the C2000 front port with a local connection or through a modem from a remote location. The control groups should be setup as a group of transmitters having the same configuration. For example, all GL-T8500 transmitters could be in one control group and GL-T8600 transmitters be in another. This would allow one to download exciter software to all GL-T8500 transmitters at one time by selecting their control group. Any transmitter with a different control group would not accept the download information.

Site ID must be different for each site location, and is used when downloading information to a specific site location. If there are multiple units at the same site, the site ID and unit ID need to be specified to download to a specific unit. If the unit ID is not specified, all units at that site accept the download.

Unit ID is programmed with a rotary switch in the C2000; it must be different for each C2000 at a site location. To download one specific unit, both site and unit ID must be specified for that unit; the unit with that site ID and unit ID is the only one that accepts the download.

For assistance on how to perform a download, call Glenayre customer support at 800-637-9181.

7.5 On-The-Fly Channel/Mode Changing

Different paging formats may require different digital deviation and offsets of paging data on the same RF carrier frequency. In the past, the only way to meet the different deviation requirements on the same frequency was to program two different channels for the same RF carrier frequency and then program those same two channels for a different digital

Copyright © 1997 Glenayre

deviation and offset. By changing channels, the deviation requirements of the paging formats were met. However, a channel change requires that the transmitter be unkeyed to allow time for PLL lock-up, which is a loss of air time.

The on-the-fly feature allows the following:

- Each channel can be programmed for four different digital modes (A, B, C, D)
- Each mode allows different digital deviation and offsets to be programmed

During normal paging operation, the C-2000 controller sends information to the transmitter telling it what channel to operate on and which one of the four digital modes to use. The four different digital modes of operation are controlled by the data 2 and data 3 lines into the C-2000 interface board on the DSP exciter. If the paging data requires a different deviation, the C-2000 transmitter controller can change the mode without having to change the channel. This allows the DSP exciter to accommodate different paging format requirements without unkeying the transmitter to change channels.

7.5.1 Programming Example

To set up the exciter for the proper digital deviation and offset programming, make up a table similar to the one shown below. Next, access Digital Mode Setup menu and select View Channel Frequencies submenu.

Table 7-1 Deviation and Offset Programming

	Channel							
	1&9	2&10	3&11	4&12	5&13	6&14	7&15	8&16
Mode/Dev.A	4500	4500	4500	4500	4500	4500	4500	4500
Mode/Offset A	0	+400	-400	+300	0	-300	0	0
Mode/Dev.B	4800	4800	4800	4800	4800	4800	4800	4800
Mode/Offset B	0	+200	-200	+400	0	+400	-400	0
Mode/Dev.C	2400	4200	4200	2400	2400	4200	2400	4200
Mode/Offset C	0	0	0	0	0	0	0	0
Mode/Dev.D	4200	2400	4200	2400	2400	2400	4200	2400
Mode/Offset D	0	0	+400	-400	0	0	0	0

Note

Initial release has setup similar to above table. Subsequent releases may have more programming variations

Copyright © 1997 Glenayre

Note

When on-the-fly software is used with a QT-1000 interface board installed in the exciter, only the deviation and offset programming for mode D is available. References in the exciter menus pertaining to modes A, B, and C are blanked out.

7.5.1.1 Release 2.10 DSP Exciter

The C-2000 transmitter controller detects a FLEX baud rate of 1600. When this condition is detected, the mode control lines to the DSP exciter change it to mode B. If the FLEX baud rate is not detected, the mode control lines are set for mode A. This requires that mode A deviation (and offset) be set for POCSAG (512, 1200 or 2400 baud), Golay, NEC and any other paging format other than FLEX requirements. Mode B deviation and offset must be set for FLEX. Mode C and D are not used.

7.6 16-Channel Operation

With 16-channel capability, the on-the-fly digital mode programming is only programmable on 8 channels. When channels 1 through 8 are programmed for different modes, channels 9 through 16 follow the same mode programming respectively (i.e. channel 9 is the same as 1, channel 10 is the same as 2, etc.). Selecting additional channels (9 through 16) is achieved by the C-2000 controller pulling mode-1 line low to the C-2000 interface board.

Copyright © 1997 Glenayre

sec_7

7.7 On-The-Fly Interface

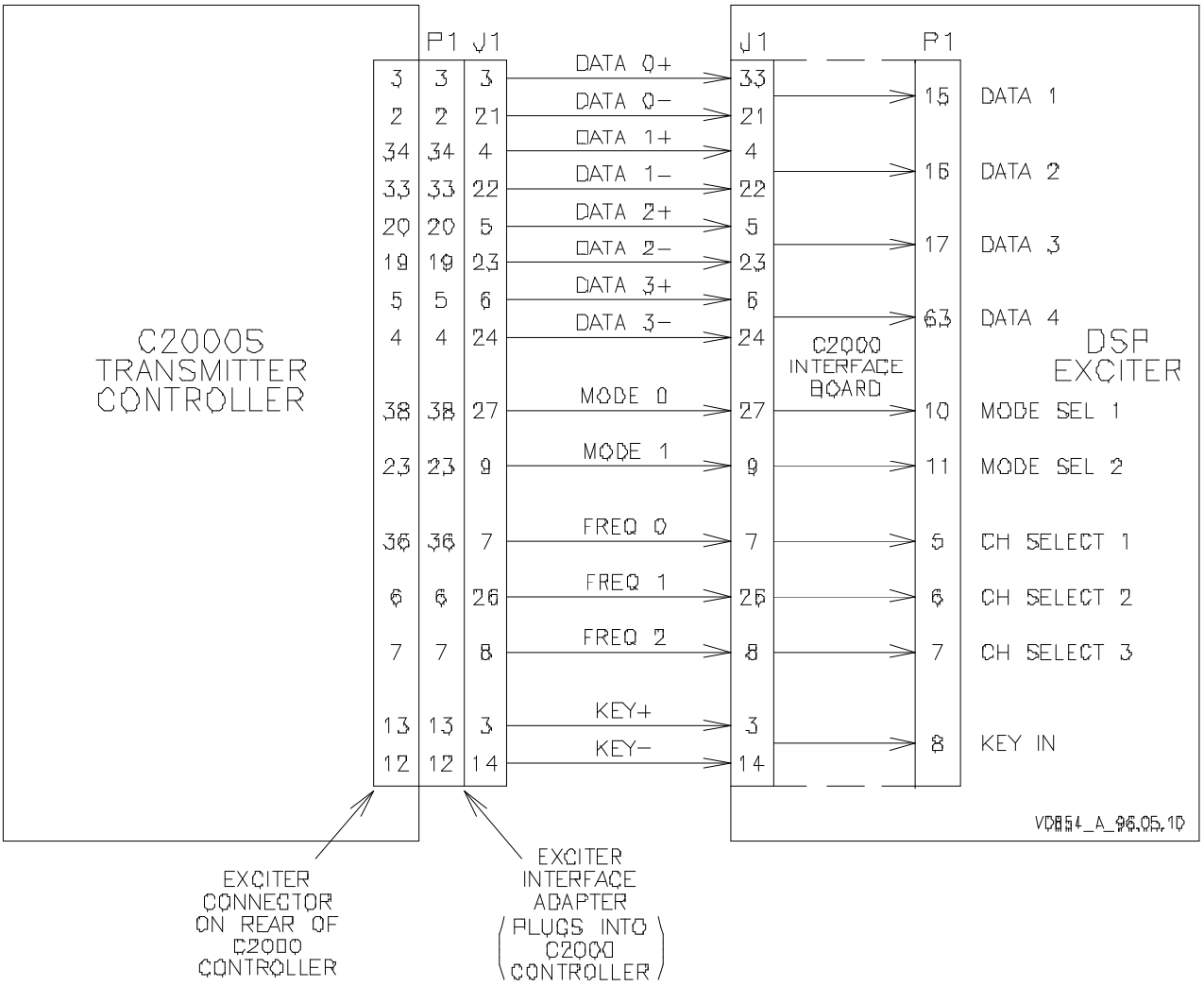

Figure 7-1 On-The-Fly C2000 Control Lines to DSP Exciter

Copyright © 1997 Glenayre

Notes:

A C-2000 interface board in the DSP exciter must be used with on-the-fly software

All J1 pin connections shown on the above diagram are at the input to the C-2000 interface board in the DSP exciter

Data 0 at the input of the C-2000 interface board controls Data 1 at its output
Data 1 at the input of the C-2000 interface board controls Data 2 at its output
Data 2 at the input of the C-2000 interface board controls Data 3 at its output
Data 3 at the input of the C-2000 interface board controls Data 4 at its output

Mode 0 at the input of the C-2000 interface board controls Mode sel 1 at its output
Mode 1 at the input of the C-2000 interface board controls Mode sel 2 at its output

Freq 0 at the input of the C-2000 interface board controls Ch select 1 at its output
Freq 1 at the input of the C-2000 interface board controls Ch select 2 at its output
Freq 2 at the input of the C-2000 interface board controls Ch select 3 at its output

Copyright © 1997 Glenayre

8 CHECKOUT AND TROUBLESHOOTING

8.1 CHECKOUT

The DSP exciter has two functions; it produces on-frequency RF and has a microprocessor to handle input from the PA and transmitter controller. Checkout involves verifying that RF is produced and unkeying occurs during a fault condition.

8.2 TROUBLESHOOTING

sec_8

The recommended troubleshooting level for the exciter is at the unit level. That is, if the exciter fails to provide the transmitter system with a usable, modulated RF-drive signal and all the exciter's power, control, and signal inputs are normal, you should replace the exciter with a spare.

Copyright © 1997 Glenayre

Copyright © 1997 Glenayre

sec_9

9 REMOVAL AND REINSTALLATION

Remove all input power from transmitter cabinet before performing these procedures.

9.1 Exciter/PA Control Chassis

Refer to *Figure 9-1, DSP Exciter Chassis Removal and Reinstallation*, for a detailed drawing.

Note

Memory PROMs in the replacement exciter should be the same as in the original exciter unless the maintenance technician intends to modify exciter characteristics. Also, parameters, such as channel frequencies, may be stored in nonvolatile RAM. Ensure that the replacement exciter is programmed correctly.

9.1.1 Removal Procedure

1. Support exciter while removing the four screws from the front panel that secure it to the cabinet. Save screws for installation procedure.
2. Remove exciter from cabinet far enough to access back panel.
3. Disconnect connector J3 from connector P3 that is pigtailed off terminal board TB1 (dc power input).
4. If a controller interface I/O panel is mounted on exciter back panel, remove I/O panel; leave all wires connected to I/O panel.
5. Tag all connectors attached to the exciter back panel.
6. Remove all connectors attached to the exciter back panel. Leave P3 connector/wiring assembly connected to terminal board TB1 for now.
7. Remove exciter.
8. Tag wires connected to terminal board TB1 on P3 connector/wiring assembly.
9. Disconnect tagged wires from terminal board TB1. Save P3 connector/wiring assembly for installation procedure.

Procedure is complete.

9.1.2 Reinstallation Procedure

Note

A wideband DSP exciter that is installed in a GL-T8500 or GL-T8600 transmitter must have one rack unit of space between it and the power amplifier chassis.

Copyright © 1997 Glenayre

1. Before installing exciter, connect wires on P3 connector/wiring assembly to terminal board TB1 on exciter back panel. P3 connector/wiring assembly is saved from removal procedure.
2. Connect connectors on transmitter to exciter back panel.
3. If controller requires interface I/O panel, install external interface I/O board on exciter back panel (see *Paragraph 9.4*).
4. Connect connector J3 to connector P3 that is pigtailed off of terminal board TB1.
5. Locate connector P3 that is pigtailed off of terminal board TB1. Disconnect connector P3 from connector J3.
6. Slide exciter into cabinet and secure with four screws saved from removal procedure.

Procedure is complete. Perform setup, adjustment, or calibration procedures as required.

9.2 Exciter Cover

These procedures must be performed with the exciter removed from the transmitter cabinet. Refer to *Figure 9-2, DSP Exciter Cover Removal and Reinstallation* throughout these procedures.

9.2.1 Removal Procedure

1. Remove two sem screws from sides of exciter cover. Save sem screws for installation procedure.
2. Raise front of cover and extract back of cover from channel in back panel extrusion.
3. Remove exciter cover.

Procedure is complete.

9.2.2 Reinstallation Procedure

1. Insert exciter cover into channel on exciter back panel extrusion.
2. Lower cover so that fingerstock is behind exciter front panel.
3. While pressing down slightly on exciter cover: install two sem screws saved from removal procedure through sides of exciter cover.

Procedure is complete.

Copyright © 1997 Glenayre

sec_9

v0151.hgl

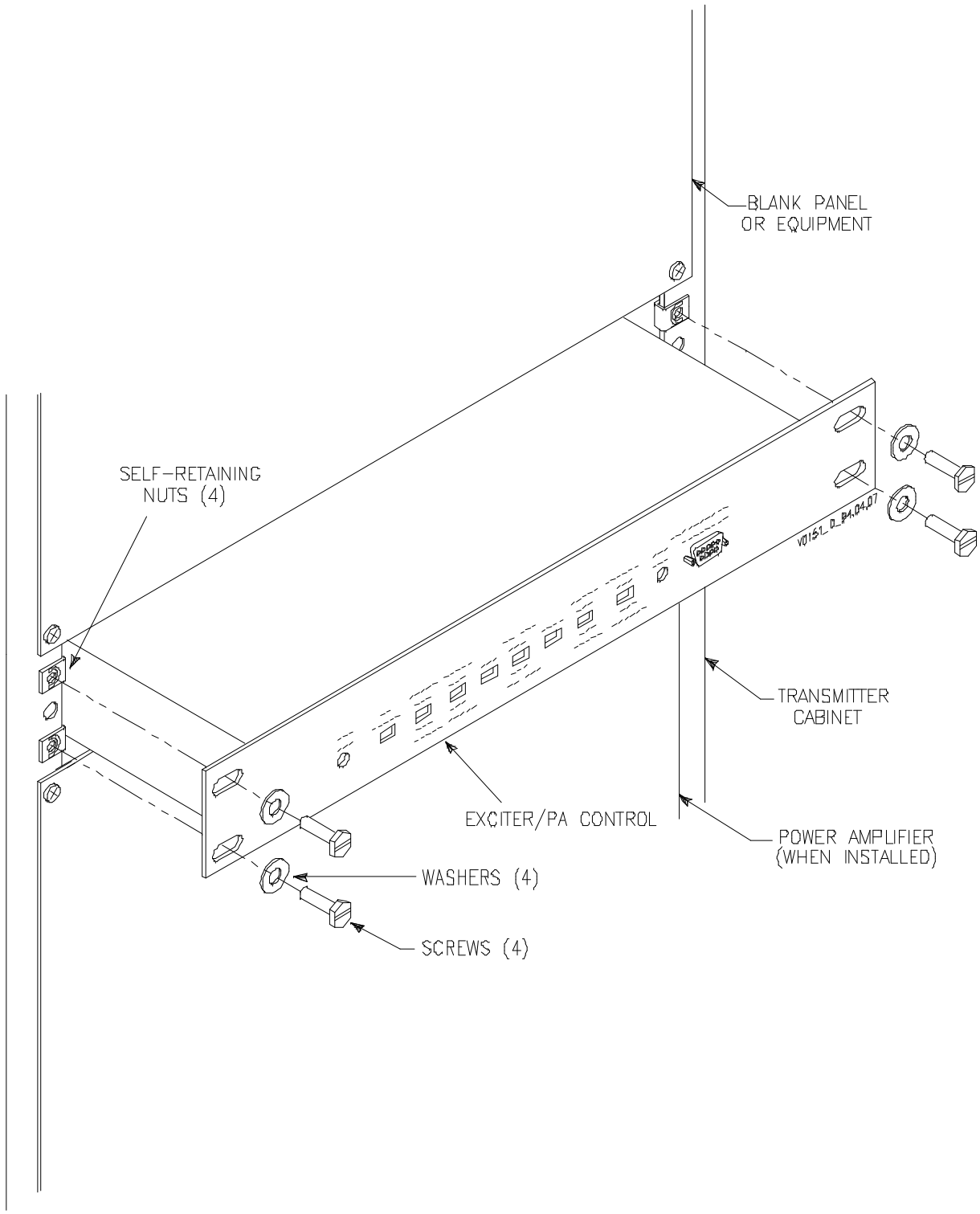

Figure 9-1 DSP Exciter Chassis Removal and Reinstallation

Copyright © 1997 Glenayre

v0171.hgl

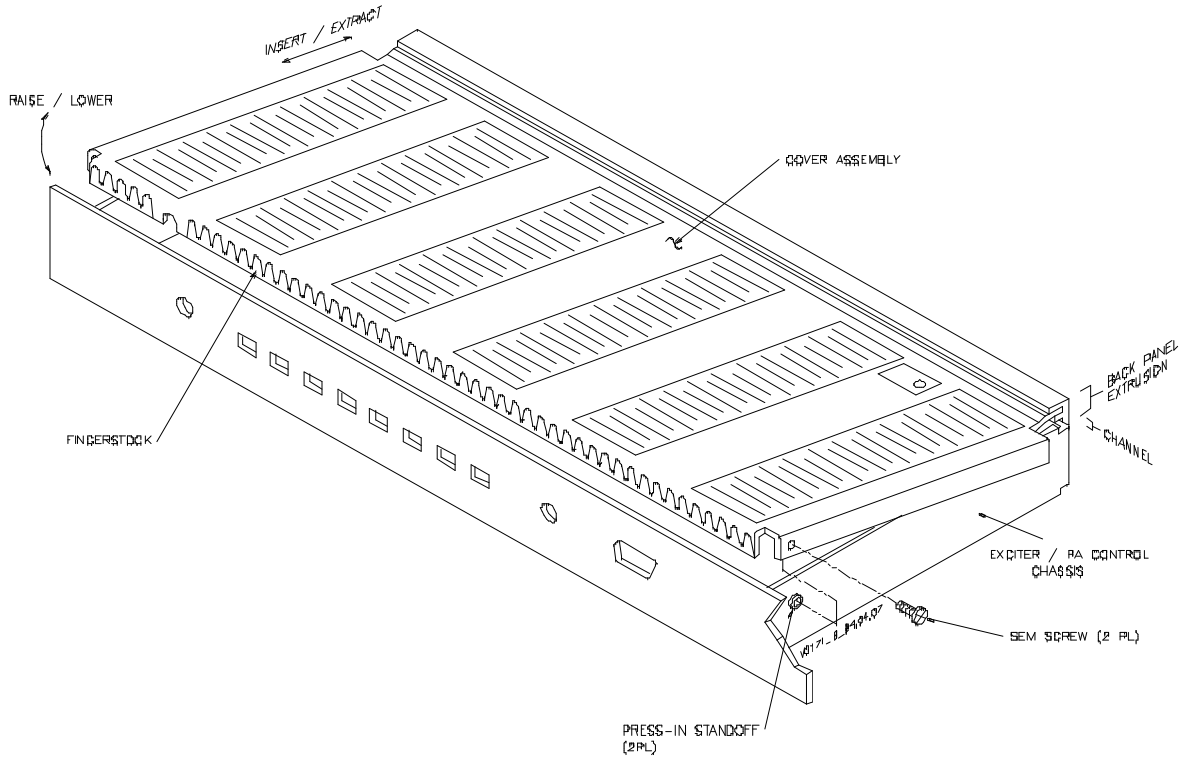

Figure 9-2 DSP Exciter Cover Removal and Reinstallation

Copyright © 1997 Glenayre

sec_9

9.3 Exciter/Control Board

These procedures must be performed with the exciter removed from the transmitter cabinet, and the exciter cover removed. Refer to *Figure 9-3, DSP Exciter Control Board Removal and Reinstallation*, throughout these procedures.

9.3.1 Removal Procedure

Note

Save all hardware for installation procedure.

1. Remove controller interface board (see Table Paragraph 9.4).
2. Remove VCO/RF amplifier board (see Table Paragraph 9.5).
3. Remove three kep nuts and three screws from regulators U1, U2, and U58.
4. Remove shoulder washer from regulator U58.
5. Remove two jam nuts and two lock washers from connectors J7 and J8.
6. Remove two jack socket screws attached to connector J6 through back panel.
7. Remove four sem screws from back panel and remove back panel from exciter chassis. Some exciters use three sem screws and one standoff.
8. Remove insulator between back panel and regulator U58.
9. Remove two jack socket screws attached to connector J3 through front panel.
10. Remove two studded standoffs through exciter/control board.
11. Remove nine sem screws that attach exciter/control board to exciter chassis, and remove exciter/control board.

Procedure is complete.

9.3.2 Reinstallation Procedure

Note

Use hardware saved from installation procedure.

1. Position exciter/control board onto exciter chassis and secure with nine sem screws.
2. Install two studded standoffs through exciter/control board.
3. Apply Vibra Tite or similar nonpermanent self-locking liquid adhesive to threads of the two jack socket screws to be used for connector J3. Apply only to top 1/4 inch of thread on each jack socket screw.
4. Install two jack socket screws into connector J3 through front panel.
5. Apply thermal compound as follows: between regulator U1 and back panel, between regulator U2 and back panel, between regulator U58 and insulator, and between insulator and back panel.
6. Install insulator between regulator U58 and back panel.

Copyright © 1997 Glenayre

7. Position back panel on exciter chassis and secure with four sem screws. Some exciters use three sem screws and one standoff in the bottom right corner.
8. Apply Vibra Tite or similar nonpermanent self-locking liquid adhesive to threads of the two jack socket screws to be used for connector J6. Apply only to top 1/4 inch of thread on each jack socket screw.
9. Install two jack socket screws into connector J6 through back panel.
10. Install two lock washers and two jam nuts over connectors J7 and J8.
11. Install shoulder washer into regulator U58.
12. Install three kep nuts and three screws through regulators U1, U2, and U58.
13. Install VCO/RF amplifier board (see Table Paragraph 9.5).
14. Install controller interface board (see Table Paragraph 9.4).

Procedure is complete. After exciter is installed in transmitter cabinet: perform setup procedure if necessary (refer to the system and menu manuals).

Copyright © 1997 Glenayre

v0170.hgl

sec_9

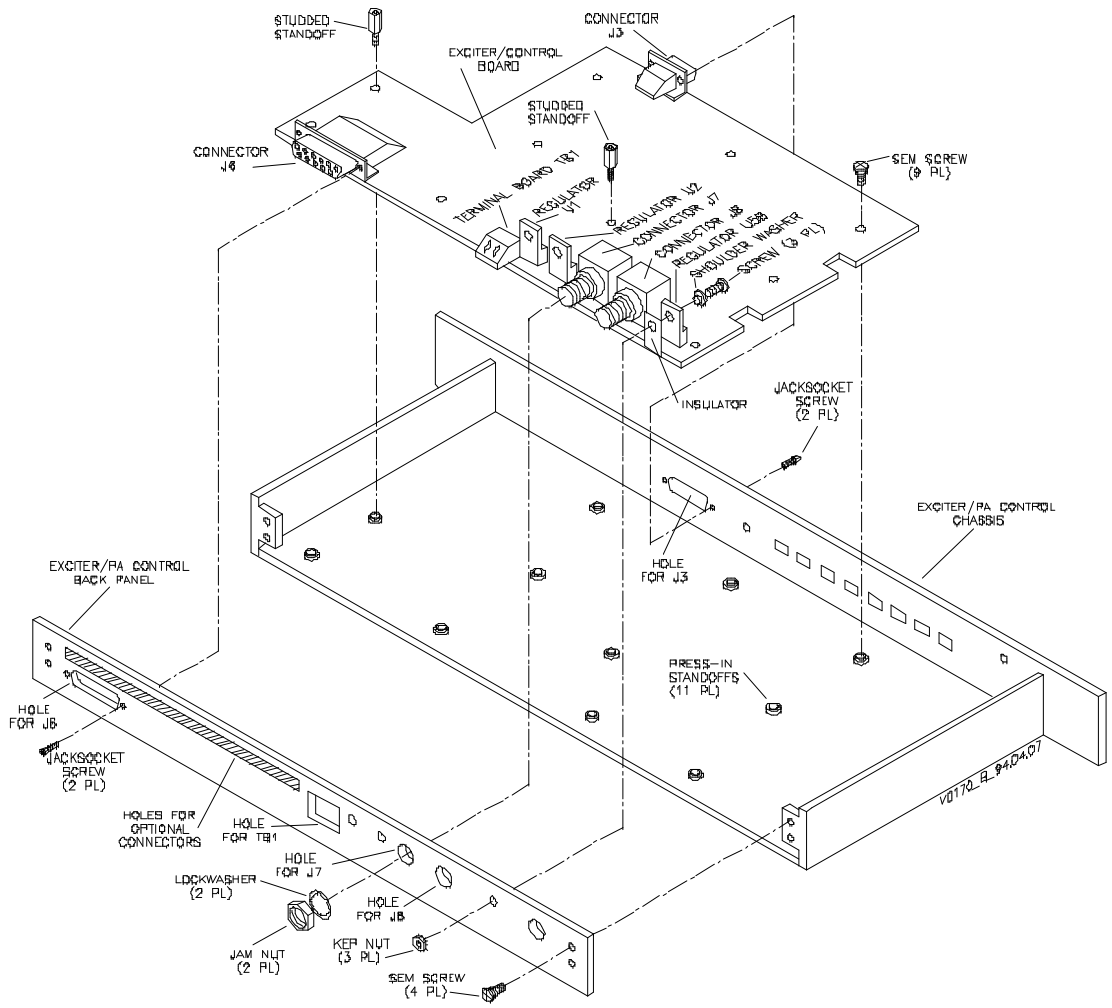

Figure 9-3 DSP Exciter Control Board Removal and Reinstallation

Copyright © 1997 Glenayre

9.4 Interface Board

These procedures must be performed with the exciter removed from the transmitter cabinet (see *Paragraph 9.1*), and the exciter cover removed (see *Paragraph 9.2*). Refer to *Figure 9-4, DSP Exciter External Interface I/O Board Removal and Reinstallation*, throughout the following procedures.

9.4.1 Removal Procedure

1. Remove jack socket screws (2 or 6) securing connector J4 (J1 and J2 not always used) to the rear panel of the exciter. Save jack socket screws for installation procedure.
2. Remove two sem screws securing interface board to standoffs. Save sem screws for installation procedure.
3. Grasp interface board at the center of connector P1. Pull up on board with a firm vertical motion to disengage connector P1 from connector J1 on the exciter/control board.
4. Remove interface board.

Procedure is complete.

9.4.2 Reinstallation Procedure

1. Position interface board into place by inserting connector J4 (and J1 and J2 if used) through openings in exciter rear panel.
2. Carefully align connector P1 on interface board with connector J1 on exciter/control board and engage.
3. Secure interface board to standoffs with two sem screws saved from removal procedure.
4. Apply Vibra Tite or similar nonpermanent self-locking liquid adhesive to threads of the six jack socket screws saved from removal procedure. Apply only to top 1/4 inch of thread on each jack socket screw.
5. Screw the six jack socket screws through holes on exciter rear panel at either sides of connectors J1, J4, and J2.

Procedure is complete. After exciter is installed into transmitter cabinet, perform audio input adjustment procedure (see Section 7).

9.5 VCO/RF Amplifier Board

These procedures must be performed with the exciter removed from the transmitter cabinet (see *Paragraph 9.1*), and the exciter cover removed (see *Paragraph 9.2*). Refer to *Figure 9-5, DSP Exciter Interface Board Removal and Reinstallation*, throughout these procedures.

Copyright © 1997 Glenayre

sec_9

9.5.1 Removal Procedure

1. Remove jam nut and lock washer from connector J3 on rear of exciter. Save jam nut and lock washer for installation procedure.
2. Remove five sem screws securing VCO/RF amplifier board to standoffs on exciter. Save sem screws for installation procedure.
3. Grasp VCO/RF amplifier board near connector P4. Pull up on board with a short vertical motion to disengage connectors P4/P9/P10 from connectors J4/J9/J10 on exciter/control board.
4. Remove VCO/RF amplifier board.

Procedure is complete.

9.5.2 Reinstallation Procedure

1. Before installing VCO/RF amplifier board, verify that RF band includes desired transmitter operating frequencies (refer to Section 10).
2. Position VCO/RF amplifier board into place by inserting connector J3 through hole in rear of exciter.
3. Carefully align connectors P4/P9/P10 on VCO/RF amplifier board with connectors J4/J9/J10 on exciter/control board and engage.
4. Secure VCO/RF amplifier board to standoffs on exciter using five sem screws saved from removal procedure.
5. Install lockwasher and jam nut to connector J3 on rear of exciter using lockwasher and jam nut saved from removal procedure.

Procedure is complete. After exciter is installed into transmitter cabinet, perform VCO2 adjustment procedure in Section 7.

Copyright © 1997 Glenayre

v0341.hgl

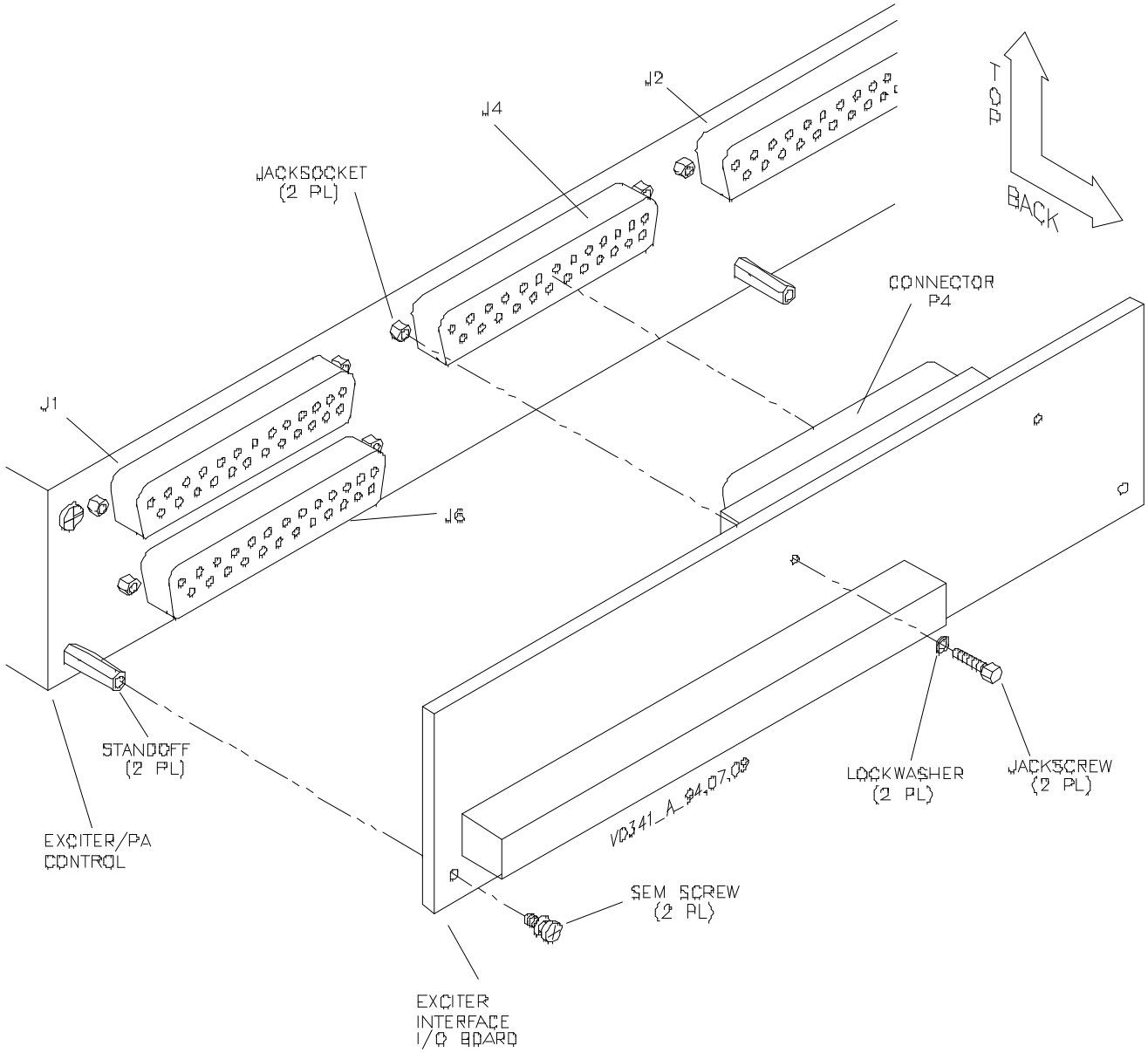

Figure 9-4 DSP Exciter External Interface I/O Board Removal and Reinstallation

Copyright © 1997 Glenayre

v0342.hgl

sec_9

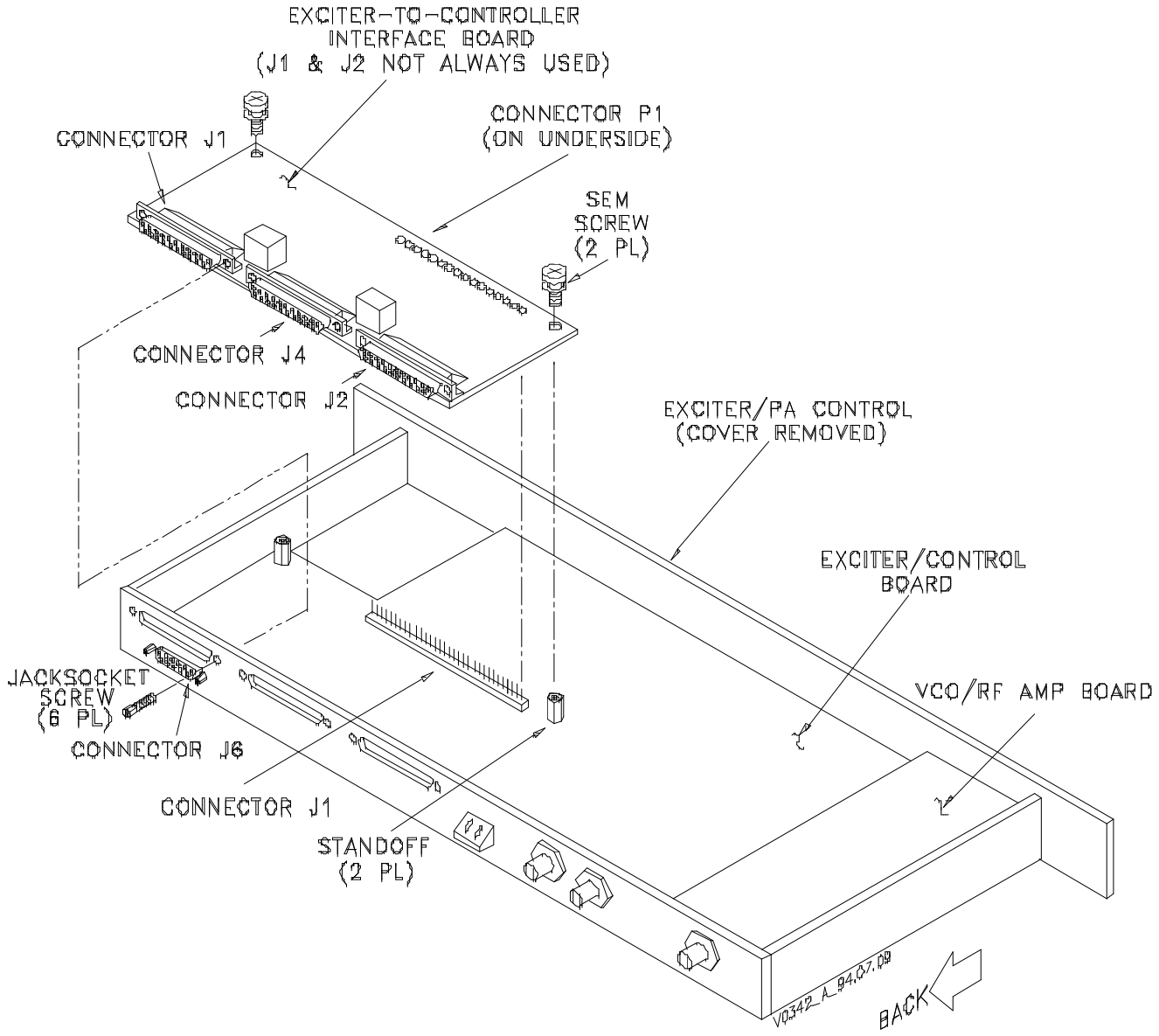

Figure 9-5 DSP Exciter Interface Board Removal and Reinstallation

Copyright © 1997 Glenayre

Copyright © 1997 Glenayre

dspsec10

10 OPTIONS

10.1 Exciter/PA Control with QT-1000 Interface

The controller interface is the portion of exciter circuitry that connects the transmitter controller to the exciter. The controller interface dictates what kind of transmitter controller may operate the transmitter. The transmitter can be operated through one of several controllers depending on the interface circuitry installed with the exciter.

Two boards form this interface, the internal QT-1000 interface board and the external interface I/O board.

Control commands from the transmitter controller are connected through the interface circuit. This circuit supplies remote control to the microcontroller unit (MCU) control circuit. The VT-100 VDT supplies local control. The MCU control circuit generates all control signals for the other circuits, and monitors their status. The MCU control circuit reports status back to the VT-100 VDT and the interface circuit, which supplies the status to the transmitter controller.

10.1.1 Reference Source

The ten-MHz reference signal is provided by the controller via J8 on the exciter/control board.

10.1.2 Controller Interface Connector Functions

Refer to *Figure 10-1*, *Table 10-1*, and *Table 10-2* for a pin-by-pin description of signal functions. The controller interfaces with the transmitter through connectors J1, J2, and J5 and terminal board TB2 at the exciter back panel. J5 on the external I/O board connects to a standard RL-XX3 receiver, if installed. If a standard receiver is not installed, TB2 on the external I/O board connects to any generic receiver. TB2 also makes connections to optional configurable QT-1000 alarm inputs and switching outputs. J1 on the internal interface board connects directly to TXC connector J1, and interfaces all signals except alarms. Alarm signals, consisting of transmitter alarm, fault, and status signals, are supplied directly to the QT-1000 controller connector J2 though J2 on the internal interface board.

10.1.3 QT-1000 Interface Conversion Functions

Many of the signals exchanged between the controller and the exciter originate with a format, voltage, or requirement incompatible with their destination. The QT-1000 interface performs any signal conversions necessary to provide compatibility between the controller and the exciter. The following text describes any signal conversions made by the controller interface.

Copyright © 1997 Glenayre

10.1.3.1 Analog-Mode A/D Conversion

The exciter DSP modulator circuit reads synchronized serial data for its analog mode input signal, but the QT-1000 controller provides an analog signal. The controller interface converts the analog to the appropriate data form for the DSP. The analog (FLAT AUDIO+,-) terminates across a balanced input circuit that also provides a level adjustment. The adjustment, when properly set by the AUDIO INPUT ADJUST pot through the exciter cover, provides analog to an A/D converter at the optimum zero-dBm level. The A/D converts the analog into serial data, which is applied to the DSP through a synchronous data link. A synchronous data link is characterized by an exchange of pulse streams for timing purposes. The A/D converter is clocked by a pulse generator circuit driven by the ten-MHz reference circuit.

10.1.3.2 FSK-Data-Bit Strapping

The exciter DSP modulator circuit can read up to four bits for its digital FSK mode input signal, but the controller provides two active bits 1 and 2 (DATA1, DATA2). This allows transmitter operation in the two-level or four-level mode.

10.1.3.3 Channel-Select-Bit Strapping

The exciter MCU control circuit reads three bits to determine the remotely selected channel, but the QT-1000 controller provides only bits 1 and 2 (CH SEL 1,2). As a result, the QT-1000 controller can command only four channels. The controller interface keeps bit 3 open (high). *Table 10-2* defines the transmitter operating channel resulting from the channel select inputs.

10.1.3.4 Mode-Select-Bit Strapping

The exciter MCU control circuit reads two bits to determine the remotely selected mode, but the QT-1000 controller provides only bit 1 (MODE CONTROL). As a result, the QT-1000 controller can command only two modes. The controller interface straps bit 2 to ground (low). *Table 10-3* defines the transmitter operating mode resulting from the model select input.

10.1.3.5 Power Sample D/A Conversion

The QT-1000 controller reads two 0-to-2.5-volt voltages for its forward and reflected power sample inputs, but these power values are stored as data in the exciter MCU control circuit. The controller interface converts the data to voltages of the appropriate range for the QT-1000 controller. Data from the MCU representing the forward and reflected powers is written into a dual D/A converter. The D/A converts the data into two proportional dc voltages ranging from 0 volt to 2.5 volts (FWD PWR SAMPLE, REF PWR SAMPLE), which are applied to the QT-1000 controller. Control logic gates ensure that data is written to the proper half of the D/A converter.

Copyright © 1997 Glenayre

dspsec10

Table 10-1 Interface Board Connector J4 (QT-1000)

J4-X	signal/description	J4-X	signal/description
1	FWD PWR SAMPLE, input from PA	14	AUDIO INPUT +, input from receiver or tx controller
2	AUDIO INPUT -, common	15	REF PWR SAMPLE, input from PA
3	TX GND	16	TONE DECODER OUTPUT, logic output to tx controller
4	KEY IN, input from tx controller	17	DATA 1, digital data input from tx controller
5	DATA 2, digital data input from tx controller	18	DATA 3, digital data input from tx controller
6	CH SELECT 3, digital command input from tx controller	19	MODE SELECT 1, digital command input from tx controller
7	MODE SELECT 2, digital command input from tx controller	20	LOW POWER MODE, logic input from PA
8	FAULT ALARM, digital output to tx controller	21	VSWR ALARM, logic output to tx controller
9	DATA4/CLK, input from tx controller	22	CH SELECT 1, logic input from tx controller
10	CH SELECT 2, logic input from tx controller	23	MOD IND, logic output to tx controller
11	LOW POWER ALARM, output to tx controller	24	TEMP ALARM, logic output to tx controller
12	SHUTDOWN ALARM, output to tx controller	25	RF INPUT ALARM, logic output to tx controller
13	not used	--	--

Copyright © 1997 Glenayre

Table 10-2 Receiver Connector J5 Pin Functions (QT-1000 with external I/O board)

J5-X	function	J5-X	function
1	no connection	9	no connection
2	standard receiver audio input for interface, 2 Vp-p, nominal	10	no connection
3	no connection	11	return for standard receiver audio
4	no connection	12	standard receiver RSSI input for interface, 0.5-6.0 Vdc
5	no connection	13	no connection
6	standard receiver ground for interface	14	standard receiver-fault alarm input for interface, LO=OK
7	no connection	15	no connection
8	standard receiver squelch output for interface, HI=unsquelched		

Table 10-3 Remote Select Input vs. Channel (QT-1000)

ch sel 1 J1-5	ch sel 2 J1-24	ch sel 3	selected channel
command open (HI)	command open (HI)	open (HI)	1
command ground (LO)	command open (HI)	open (HI)	2
command open (HI)	command ground (LO)	open (HI)	3
command ground (LO)	command ground (LO)	open (HI)	4

Table 10-4 Remote Select Input vs. Mode (QT-1000)

mode sel 1 J1-25	mode sel 2 J2-1	selected mode
command ground (LO)	ground (LO)	analog
command open (HI)	ground (LO)	2-level
command open (HI)	command open (HI)	4-level

Note

Not all transmitters can do all the modes.

Copyright © 1997 Glenayre

dspsec10

10.2 Exciter/PA Control with Standard Interface

The following major paragraphs describe the operation of the major items within the standard interface. Detailed figures are referenced, as required.

The controller interface is the portion of exciter circuitry that connects the transmitter controller to the exciter. The controller interface dictates what kind of transmitter controller may operate the transmitter. The transmitter can be operated through one of several controllers depending on the interface circuitry installed at the exciter. The remainder of section 10.2 describes standard controller interface circuitry.

Two boards form this interface, the internal standard interface board and the external exciter standard interface I/O board.

Control commands from the transmitter controller are connected through the interface circuit. This circuit supplies remote control to the microcontroller unit (MCU) control circuit. The VT-100 VDT supplies local control. The MCU control circuit generates all control signals for the other circuits, and monitors their status. The MCU control circuit reports status back to the VT-100 VDT and the interface circuit, which supplies the status to the transmitter controller.

10.2.1 Reference Source

The ten-MHz reference signal is provided by the controller via J8 on the exciter/control board. All other inputs and outputs, except for RF output, are routed through the standard interface board.

10.2.2 Controller Interface Connector Functions

Refer to *Table 10-1, Interface Board Connector J4 (QT-1000)*, for a pin-by-pin description of signal functions. The controller interfaces with the transmitter through connector J4 and terminal board TB2 at the exciter back panel. TB2 also makes connections to optional configurable alarm inputs and switching outputs.

10.2.3 Standard Interface Conversion Functions

Many of the signals exchanged between the controller and the exciter originate with a format, voltage, or requirement incompatible with their destination. The standard interface performs any signal conversions necessary to provide compatibility between the controller and the exciter. The following text describes any signal conversions made by the controller interface.

10.2.3.1 Analog-Mode A/D Conversion

The exciter DSP modulator circuit reads synchronized serial data for its analog mode input signal, but the transmitter controller provides an analog signal. The controller interface converts the analog to the appropriate data form for the DSP. The analog (FLAT AUDIO +,-) terminates across a balanced input circuit that also provides a level adjustment. The adjustment, when properly set by the AUDIO INPUT ADJUST pot through the exciter cover, provides analog to an A/D converter at the optimum zero-dBm level. The A/D

Copyright © 1997 Glenayre

converts the analog into serial data, which is applied to the DSP through a synchronous data link. A synchronous data link is characterized by an exchange of pulse streams for timing purposes. The A/D converter is clocked by a pulse generator circuit driven by the exciter's ten-MHz reference circuit.

10.2.3.2 FSK-Data-Bit Strapping

The exciter DSP modulator circuit can read up to four bits for its digital FSK mode input signal, but the controller provides two active bits 1 and 2 (DATA1, DATA2). This allows transmitter operation in the two-level or four-level mode.

10.2.3.3 Channel-Select-Bit Strapping

The exciter MCU control circuit reads three bits to determine the remotely selected channel, and the transmitter controller provides bits 1, 2, and 3 (CH SEL 1,2,3). As a result, the transmitter controller can command all eight of the possible channels. *Table 10-3, Remote Select Input vs. Channel (QT-1000)*, defines the transmitter operating channel resulting from the channel select inputs.

10.2.3.4 Mode-Select-Bit Strapping

The exciter MCU control circuit reads two bits to determine the remotely selected mode, but the transmitter controller provides only bit 1 (MODE CONTROL). As a result, the transmitter controller can command three of the transmitter's four possible modes. *Table 10-4, Remote Select Input vs. Mode (QT-1000)*, defines the transmitter operating mode resulting from the model select input.

10.2.3.5 Power Sample D/A Conversion

The transmitter controller reads two 0-to-2.5-volt voltages for its forward and reflected power sample inputs, but these power values are stored as data within the exciter's MCU control circuit. The controller interface converts the data to voltages of the appropriate range for the transmitter controller. Data from the MCU representing the forward and reflected powers is written into a dual D/A converter. The D/A converts the data into two proportional dc voltages ranging from 0 volt to 2.5 volts (FWD PWR SAMPLE, REF PWR SAMPLE), which are applied to the transmitter controller. Control logic gates ensure that data is written to the proper half of the D/A converter.

Copyright © 1997 Glenayre

dspsec10

Table 10-5 Interface Board Connector J4 (Standard)

J4-X	signal/description	J4-X	signal/description
1	FWD PWR SAMPLE, input from PA	14	AUDIO INPUT -, input from receiver or tx controller
2	AUDIO INPUT +, common	15	REF PWR SAMPLE, input from PA
3	TX GND	16	TONE DECODER OUTPUT, logic output to tx controller
4	KEY IN, input from tx controller	17	DATA 1, digital data input from tx controller
5	DATA 2, digital data input from tx controller	18	DATA 3, digital data input from tx controller
6	CH SELECT 3, digital command input from tx controller	19	MODE SELECT 1, digital command input from tx controller
7	MODE SELECT 2, digital command input from tx controller	20	LOW POWER MODE, logic input from PA
8	FAULT ALARM, digital output to tx controller	21	VSWR ALARM, logic output to tx controller
9	DATA4/CLK, input from tx controller	22	CH SELECT 1, logic input from tx controller
10	CH SELECT 2, logic input from tx controller	23	MOD IND, logic output to tx controller
11	LOW POWER ALARM, output to tx controller	24	TEMP ALARM, logic output to tx controller
12	SHUTDOWN ALARM, output to tx controller	25	RF INPUT ALARM, logic output to tx controller
13	not used	--	--

Table 10-6 Remote Select Input vs. Channel (standard)

ch sel 1 J1-5	ch sel 2 J1-24	ch sel 3	selected channel
command open (HI)	command open (HI)	open (HI)	1
command ground (LO)	command open (HI)	open (HI)	2
command open (HI)	command ground (LO)	open (HI)	3
command ground (LO)	command ground (LO)	open (HI)	4
command open (HI)	command open (HI)	command ground (LO)	5
command ground (LO)	command open (HI)	command ground (LO)	6
command open (HI)	command ground (LO)	command ground (LO)	7
command ground (LO)	command ground (LO)	command ground (LO)	8

Copyright © 1997 Glenayre

Table 10-7 Remote Select Input vs. Mode (standard)

mode sel 1 J1-25	mode sel 2 J2-1	selected mode
command ground (LO)	ground (LO)	analog
command open (HI)	ground (LO)	2-level
command open (HI)	command open (HI)	4-level

Note

Not all transmitters can do all the modes.

10.3 Exciter/PA Control with I20 Interface

The following major paragraphs describe the operation of the major items within the I20 interface. Detailed figures are referenced, as required.

The controller interface is the portion of exciter circuitry that connects the transmitter controller to the exciter. The controller interface dictates what kind of transmitter controller may operate the transmitter. The transmitter can be operated through one of several controllers depending on the interface circuitry installed at the exciter. The remainder of section 10.3 describes I20 controller interface circuitry.

Two boards form this interface, the internal I20 interface board and the external I20 interface I/O board.

Control commands from the transmitter controller are connected through the interface circuit. This circuit supplies remote control to the microcontroller unit (MCU) control circuit. The VT-100 VDT supplies local control. The MCU control circuit generates all control signals for the other circuits, and monitors their status. The MCU control circuit reports status back to the VT-100 VDT and the interface circuit, which supplies the status to the transmitter controller.

10.3.1 Reference Source

The ten-MHz reference signal is provided by the controller via J8 on the exciter/control board.

10.3.2 Controller Interface Connector Functions

Refer to *Table 10-8* and *Table 10-9* for a pin-by-pin description of signal functions. The exciter interfaces with the transmitter through connector J2 and the controller through J1.

Copyright © 1997 Glenayre

dspsec10

10.3.3 I20 Interface Conversion Functions

Many of the signals exchanged between the controller and the exciter originate with a format, voltage, or requirement incompatible with their destination. The I20 interface performs any signal conversions necessary to provide compatibility between the controller and the exciter. The following text describes any signal conversions made by the controller interface.

10.3.3.1 Analog-Mode A/D Conversion

The exciter DSP modulator circuit reads synchronized serial data for its analog mode input signal, but the transmitter controller provides an analog signal. The controller interface converts the analog to the appropriate data form for the DSP. The analog (FLAT AUDIO +,-) terminates across a balanced input circuit that also provides a level adjustment. The adjustment, when properly set by the AUDIO INPUT ADJUST pot through the exciter cover, provides analog to an A/D converter at the optimum zero-dBm level. The A/D converts the analog into serial data, which is applied to the DSP through a synchronous data link. A synchronous data link is characterized by an exchange of pulse streams for timing purposes. The A/D converter is clocked by a pulse generator circuit driven by the ten-MHz reference circuit.

10.3.3.2 FSK-Data-Bit Strapping

The exciter DSP modulator circuit can read up to four bits for its digital FSK mode input signal, but the controller provides two active bits 1 and 2 (DATA1, DATA2). This allows transmitter operation in the two-level or four-level mode.

10.3.3.3 Channel-Select-Bit Strapping

The exciter MCU control circuit reads three bits to determine the remotely selected channel, and the transmitter controller provides bits 1, 2, and 3 (CH SEL 1,2,3). As a result, the transmitter controller can command all eight of the possible channels. Table 10-3 defines the transmitter operating channel resulting from the channel select inputs.

10.3.3.4 Mode-Select-Bit Strapping

The exciter MCU control circuit reads two bits to determine the remotely selected mode, and the transmitter controller provides two bits (MODE SELECT 1, MODE SELECT 2). As a result, the transmitter controller can command three of the transmitter's four possible modes. Table 10-4 defines the transmitter operating mode resulting from the model select input.

10.3.3.5 Power Sample D/A Conversion

The transmitter controller reads two 0-to-2.5-volt voltages for its forward and reflected power sample inputs, but these power values are stored as data within the exciter's MCU control circuit. The controller interface converts the data to voltages of the appropriate range for the transmitter controller. Data from the MCU representing the forward and reflected powers is written into a dual D/A converter. The D/A converts the data into two

Copyright © 1997 Glenayre

proportional dc voltages ranging from 0 volt to 2.5 volts (FWD PWR SAMPLE, REF PWR SAMPLE), which are applied to the transmitter controller. Control logic gates ensure that data is written to the proper half of the D/A converter.

Table 10-8 Interface Board Connector J1

J1-X	signal/description	J1-X	signal/description
1	CHASSIS	20	CLOCK-
2	CLOCK+	21	DATA0-
3	DATA0+	22	DATA1-
4	DATA1+	23	DATA2-
5	DATA2+	24	DATA3-
6	DATA3+	25	GND
7	FREQ0	26	FREQ1
8	FREQ2	27	MODE 0
9	MODE 1	28	MODE/AUX
10	ANALOG+	29	ANALOG-
11	GND	30	GND
12	RxD-	31	RxD+
13	TxD-	32	TxD+
14	KEY-	33	KEY+
15	DIG OUT 6	34	DIG OUT 7
16	DIG OUT 4	35	DIG OUT 5
17	DIG OUT 2	36	DIG OUT 3
18	DIG OUT 0	37	DIG OUT 1
19	_RESET		

Copyright © 1997 Glenayre

dspsec10

Table 10-9 Interface Board Connector J2

J2-X	signal/description	J2-X	signal/description
1	not used	8	GND
2	TxD+	9	TxD-
3	KEY+	10	KEY-
4	RxD+	11	RxD-
5	DATA0+	12	DATA0-
6	CLOCK+	13	CLOCK-
7	DATA1+	14	DATA1-

Table 10-10 Remote Select Input vs. Channel (I20)

ch sel 1 J1	ch sel 2 J1	ch sel 3	selected channel
command open (HI)	command open (HI)	open (HI)	1
command ground (LO)	command open (HI)	open (HI)	2
command open (HI)	command ground (LO)	open (HI)	3
command ground (LO)	command ground (LO)	open (HI)	4
command open (HI)	command open (HI)	command ground (LO)	5
command ground (LO)	command open (HI)	command ground (LO)	6
command open (HI)	command ground (LO)	command ground (LO)	7
command ground (LO)	command ground (LO)	command ground (LO)	8

Table 10-11 Remote Select Input vs. Mode (I20)

mode sel 1 J1-25	mode sel 2 J2-1	selected mode
command ground (LO)	ground (LO)	analog
command open (HI)	ground (LO)	2-level
command open (HI)	command open (HI)	4-level

Copyright © 1997 Glenayre

Copyright © 1997 Glenayre