Contents

Before Using the Printer

Important Safety Information 3
Safety Precautions 3
Caution labels. 3
Manuals for This Product 4
Product Information Page 4
Checking Items Included with the Printer 5

Part Names

Body 8
Operation panel 10

Basic Operations

Placing or Hanging the Printer 11
Placing the Printer on a Flat Surface. 15
Hanging the Printer. 16
Installing the Battery 18
How to Install the Battery. 19
How to Remove the Battery 20
How to Charge the Battery. 21
Charge LED 23
Battery LED 23
Wireless Charging 24
Turning the Power On/Off 25
Turning the Power On 25
Turning the Power Off 26
Opening/Closing the Roll Paper Cover. 27
How to Open the Roll Paper Cover 27
How to Close the Roll Paper Cover 29
Installing or Replacing the Roll Paper. 30
Anti-Curl Function 34
How to Disable the Anti-Curl Function 34

Setup

Connecting via Wi-Fi (Wi-Fi model) 35
Connecting via Bluetooth (Bluetooth model) 36
Connecting with a USB Cable 37

Cleaning

Cleaning the Printer Case 38
Cleaning the Thermal Head 39
Cleaning the Platen Roller and Paper Detector 41

Troubleshooting

QR Code Label 43
Meanings of LED Indications 44
Printer status. 44
Wi-Fi Connection Status (Wi-Fi model) 44
Bluetooth Connection Status (Bluetooth model) . 44
Charge LED. 45
Battery Level 45
When the Roll Paper Jams. 46
When the Roll Paper Cover does Not Open. 48
Printout is Faint 49
Cannot Print 50

Product Specifications

Product Specifications 51
Printing method. 51
Roll paper 51
Interface. 51
Power supply 51
USB charging 52
Continuous operating time 52
Temperature/Humidity. 53
Altitude 53
Overall dimensions (W x D x H). 53
Weight 53
Consumables and Options 54

Appendix

Restriction of Use 55
CAUTIONS. 55
Trademarks 55

INDEX.HTML

MI 57
MI01. 57
MI02. 57
MI03. 57
MI04. 57
MI05. 58
MI06. 58
MI07. 58

Contents

MI08 58
MENU01 58
MENU02 58
MENU03 58
MENU04 58
MENU05 58
MENU06 58
MENU07 58
MENU08 59

H_DEF.FM

Conv Info. 60

Before Using the Printer

Important Safety Information

The symbols shown below are used in this manual in order to ensure safety and proper use of this product and to prevent danger to you and other persons, and property damage.

The symbols are identified by their level of importance, as defined below. Be sure that you completely understand their meanings before reading this manual.

WARNING:
Warnings must be followed carefully to avoid serious bodily injury.

CAUTION:
Cautions must be observed to avoid minor injury to yourself, damage to your equipment, or loss of data.

Note:
Notes have important information and useful tips on the operation of your equipment.

Safety Precautions

Before using this product, please read the Important Safety Information included with the product.

Caution labels

The caution labels on the product indicate the following precautions.

CAUTION:
Do not touch the thermal head and its surroundings during use or immediately after use. They may be hot immediately after printing.

CAUTION:
Touching the manual cutter may cause injury.

Manuals for This Product

The following manuals are available for this product.

Paper manual	**Manuals, such as Setup Guide, included in the product package** Explains how to install and set up this product, from checking the bundled items. Precautions for handling this product are also provided. To ensure safe and correct use and to prevent harm to you or others, or damage to property, please read the paper manuals before using the product.
Manuals viewed on computers and smart devices	**User's Manual (this manual)** Describes the functions of this product, how to operate it, information on maintenance, and how to solve various problems. In addition to the URL below, you can also access it from the QR code attached to the product itself. <https://www.epson-biz.com/?prd=tm-p202&inf=manual-ww> https://www.epson-biz.com/?prd=tm-p802&inf=manual-ww https://www.epson-biz.com/?prd=tm-p802ac&inf=manual-ww
Manuals viewed on computers	**TM-P20II Technical Reference Guide ~~(Technical Reference Guide)~~** **TM-P80II Technical Reference Guide ~~(Technical Reference Guide)~~** **TM-P80IIAC Technical Reference Guide ~~(Technical Reference Guide)~~** Describes information necessary to set up this product, perform daily tasks, and develop your own system. You can access the manual from the URL below. <https://www.epson-biz.com/?prd=tm-p202> https://www.epson-biz.com/?prd=tm-p802 <(TBD)> <https://www.epson-biz.com/?prd=tm-p802ac(TBD)>
Manuals viewed on computers and smart devices	**Web video manual** Explains in an easy-to-understand manner how to set up this product and how to connect this product via Wi-Fi or Bluetooth. You can access the manual from the URL below. <https://www.epson-biz.com/?prd=tm-p202&inf=video (TBD) https://www.epson-biz.com/?prd=tm-p802&inf=video (TBD) https://www.epson-biz.com/?prd=tm-p802ac&inf=video (TBD) The contents of the videos are subject to change without notice.

Product Information Page

You can download Technical Reference Guide, and utilities and software for the printer from the product information page. Download from the following URL.

https://www.epson-biz.com/?prd=tm-p202

https://www.epson-biz.com/?prd=tm-p802 ~~(TBD)~~

https://www.epson-biz.com/?prd=tm-p802ac ~~(TBD)~~

Checking Items Included with the Printer

The following items are included with the printer. If any item is damaged or missing, contact qualified service personnel.

❏ Printer

* The printer is equipped with a belt clip.

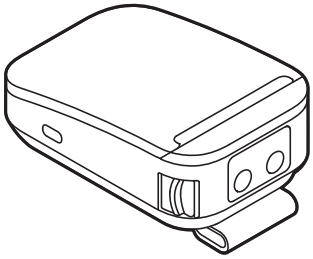

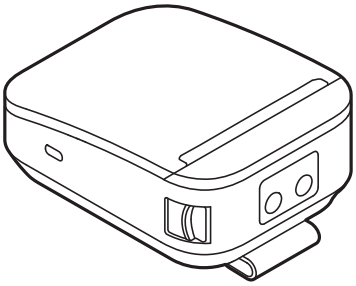

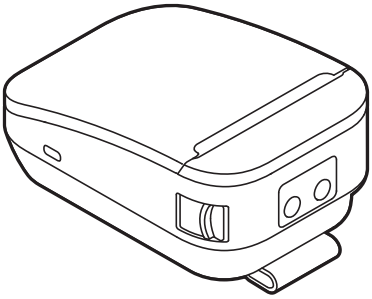

Before Using the Printer

❏ Battery (OT-BY20)

Battery (OT-BY80II)

Battery (OT-BY80II)

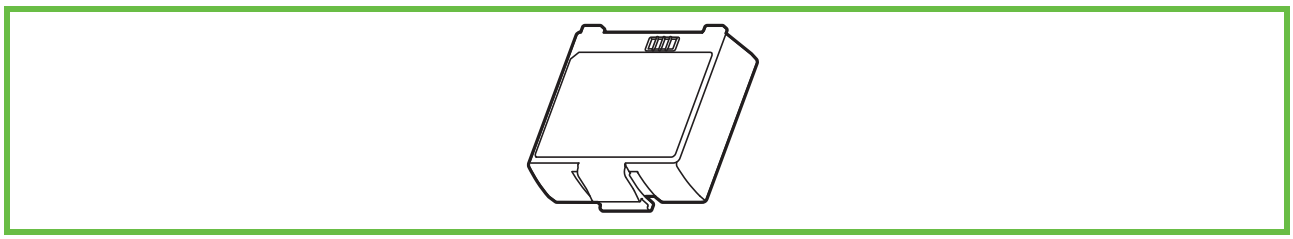

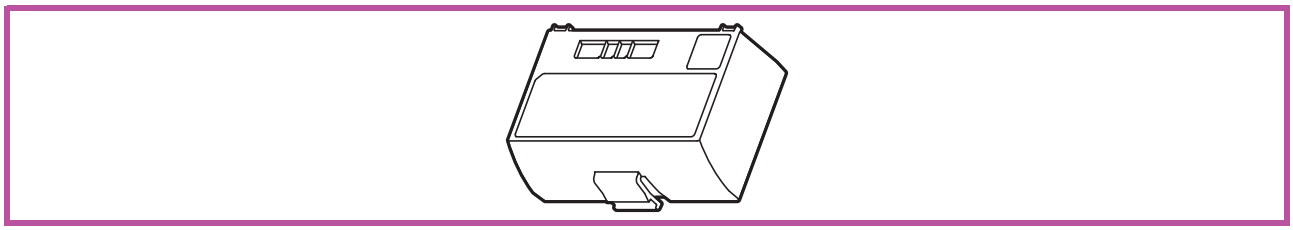

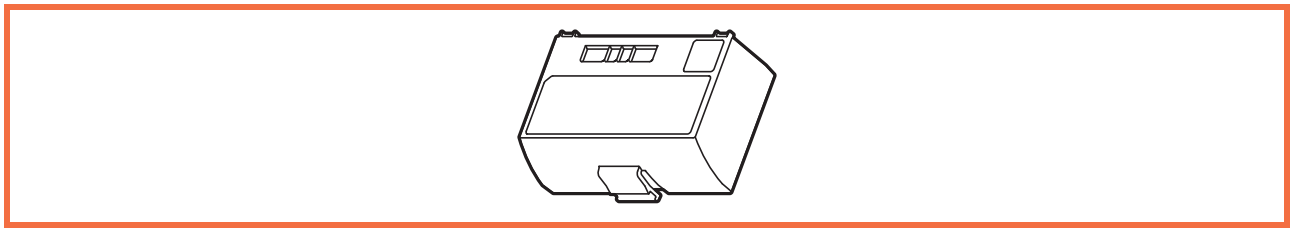

❏ USB cable (Type-c to Type-C)

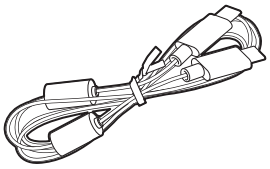

❏ Roll paper for operation check

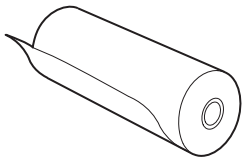

Before Using the Printer

❑ Manuals

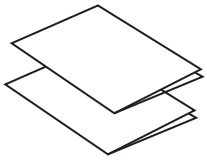

Part Names

Body

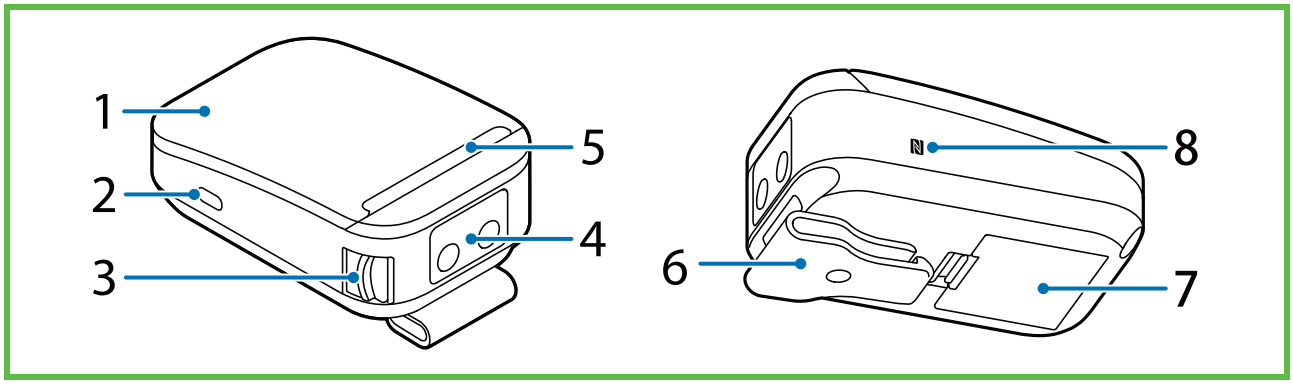

1	Roll paper cover	Open this cover when installing or replacing the roll paper.
2	USB-C connector	Connects a USB cable.
3	Cover open lever	Operate this lever to open the roll paper cover.
4	Operation panel	There are buttons to operate the printer and LEDs to display the printer status.
5	Manual cutter	A cutter for cutting roll paper.
6	Belt clip	A clip for hanging the printer from a waist belt.
7	Battery	Provides electricity to the printer. The printer does not work without the battery installed.
8	NFC Tag	A mark is printed here to indicate the position of the NFC tag. Bring an NFC-compatible device close to the mark to obtain information about the printer.

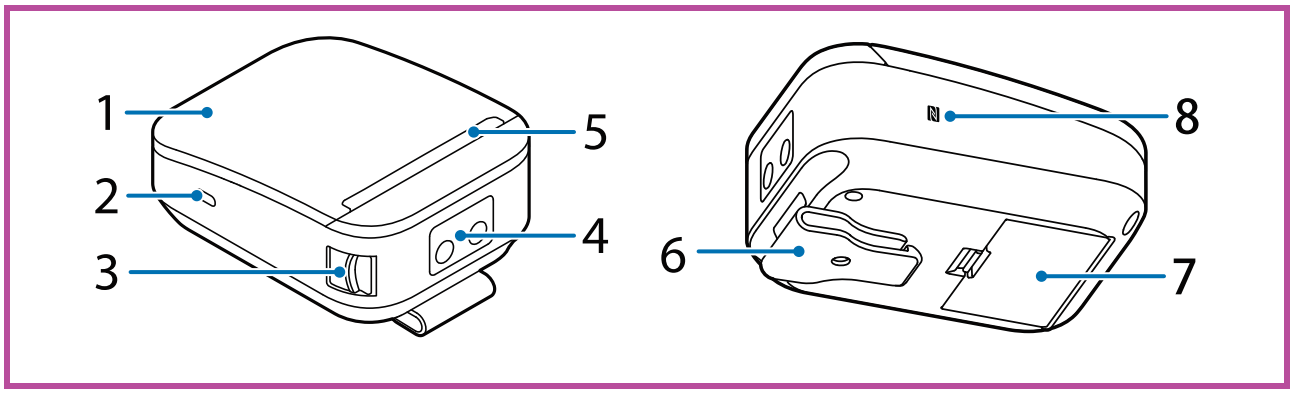

Part Names

1	Roll paper cover	Open this cover when installing or replacing the roll paper.
2	USB-C connector	Connects a USB cable.
3	Cover open lever	Operate this lever to open the roll paper cover.
4	Operation panel	There are buttons to operate the printer and LEDs to display the printer status.
5	Manual cutter	A cutter for cutting roll paper.
6	Belt clip	A clip for hanging the printer from a waist belt.
7	Battery	Provides electricity to the printer. The printer does not work without the battery installed.
8	NFC Tag	A mark is printed here to indicate the position of the NFC tag. Bring an NFC-compatible device close to the mark to obtain information about the printer.

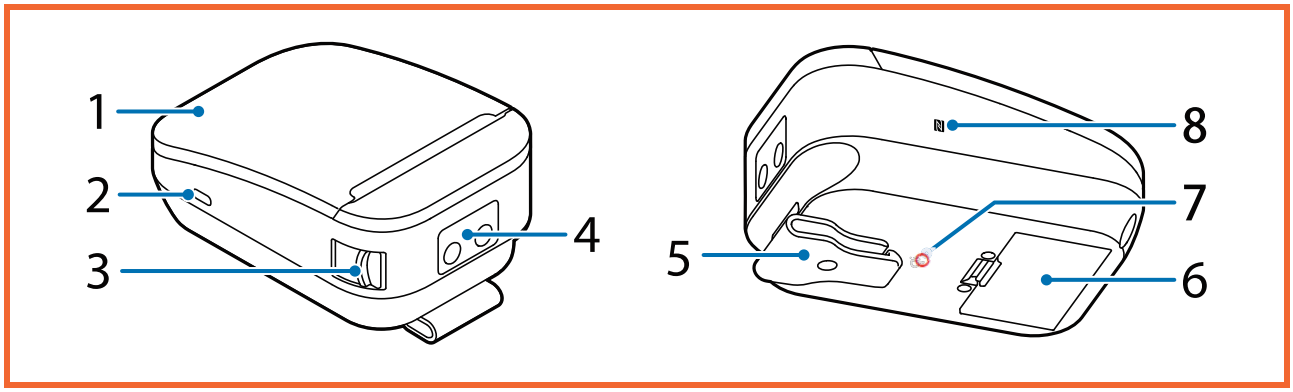

1	Roll paper cover	Open this cover when installing or replacing the roll paper.
2	USB-C connector	Connects a USB cable.
3	Cover open lever	Operate this lever to open the roll paper cover.
4	Operation panel	There are buttons to operate the printer and LEDs to display the printer status.
5	Belt clip	A clip for hanging the printer from a waist belt.
6	Battery	Provides electricity to the printer. The printer does not work without the battery installed.
7	the position of wireless charger	The printer can be charged by aligning the symbol with a Qi symbol on a commercially available wireless charger.
8	NFC Tag	A mark is printed here to indicate the position of the NFC tag. Bring an NFC-compatible device close to the mark to obtain information about the printer.

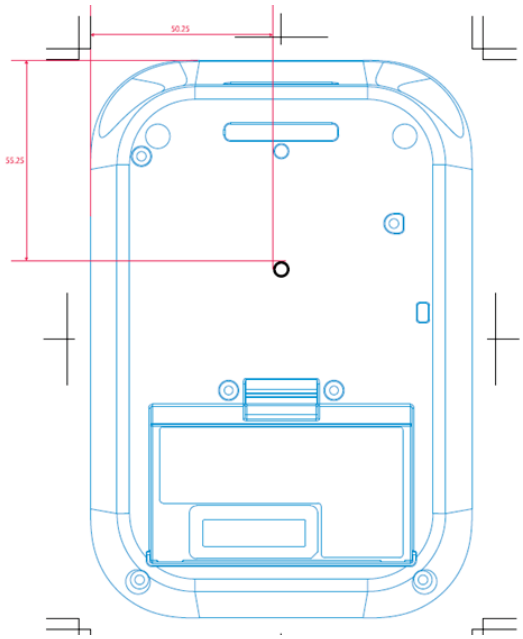

Operation panel

Wi-Fi model

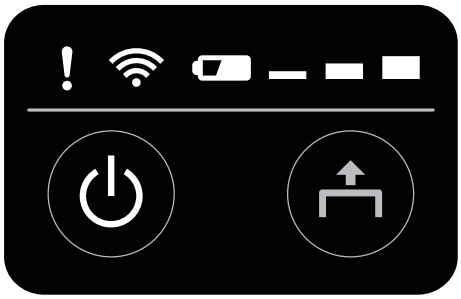

Bluetooth® model

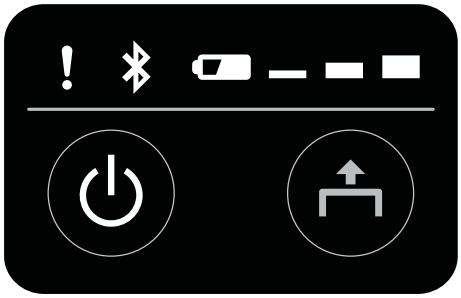

	Power button	This button turns the printer on or off.
	Feed button	Press this button once to feed the roll paper for one line. Hold down this button to continue feeding the roll paper.
	Power LED	This turns on when the printer is on.
	Error LED	Turns on when the printer is temporarily unable to print, such as when no roll paper is loaded or the roll paper cover is open. Flashes when an error occurs.
	Charge LED	Indicates whether the battery is charging or not.
	Battery LED	Indicates remaining battery charge.
	Wi-Fi LED	Turns on when the printer is connected to Wi-Fi.
	Bluetooth LED	Turns on when the printer is connected via Bluetooth.

Basic Operations

Placing or Hanging the Printer

The printer can be placed on a horizontal surface such as a desk or hung vertically from your belt using the belt clip of the printer.

❏ Placing the Printer on a Flat Surface

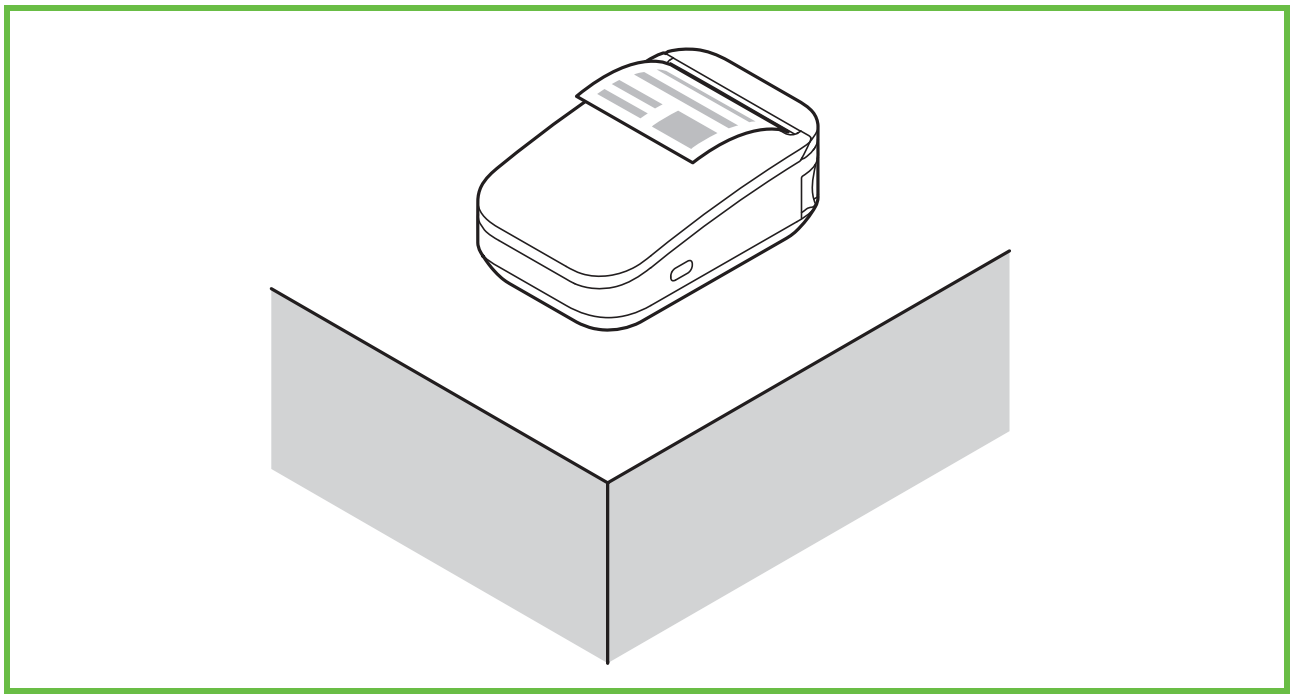

Basic Operations

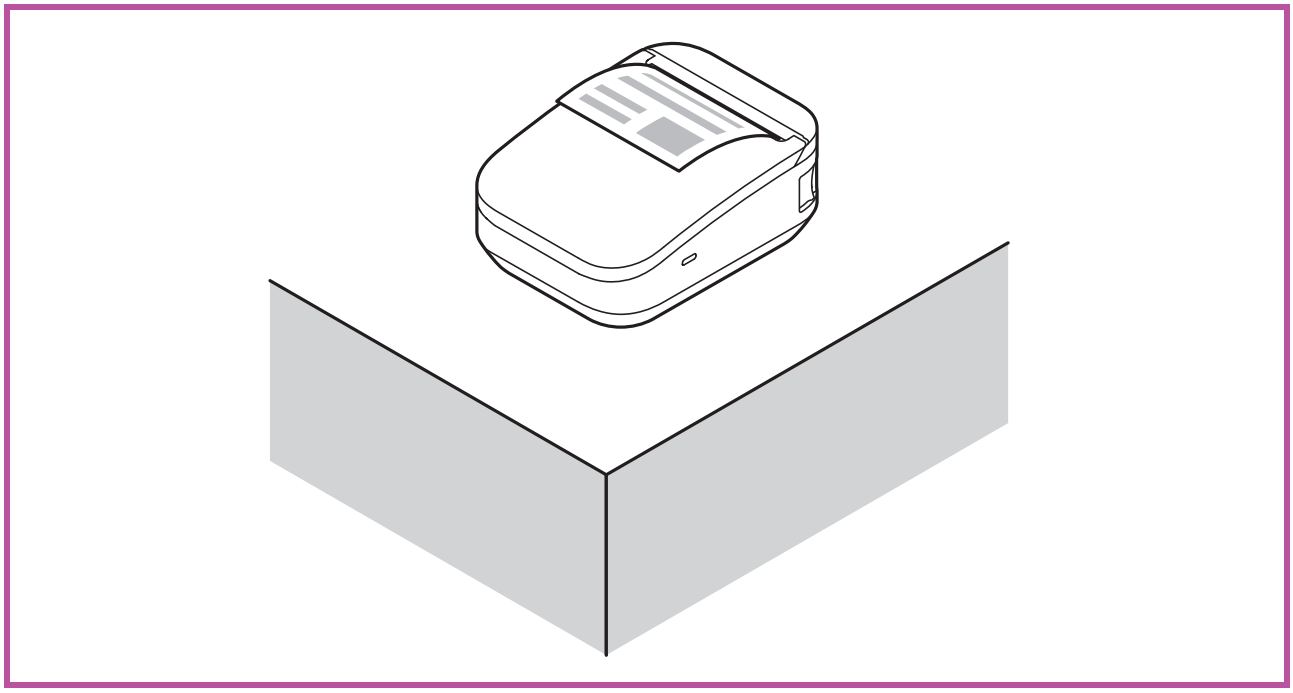

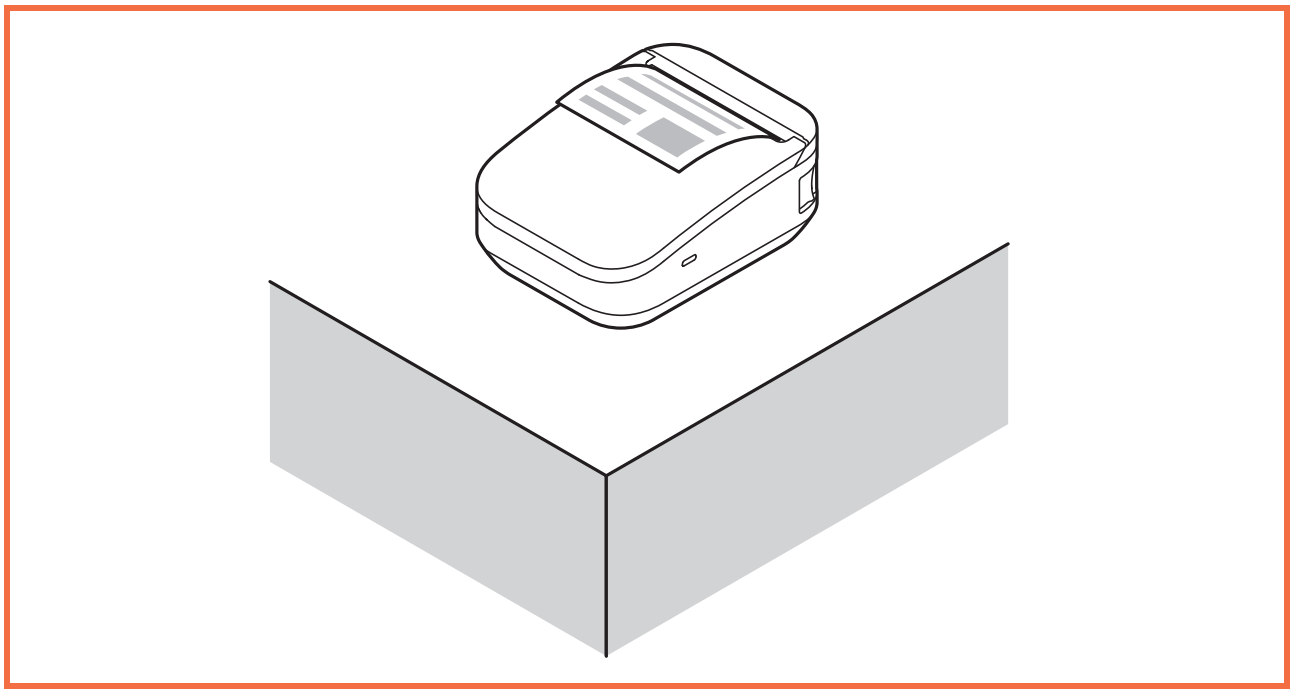

❏ Hanging the Printer

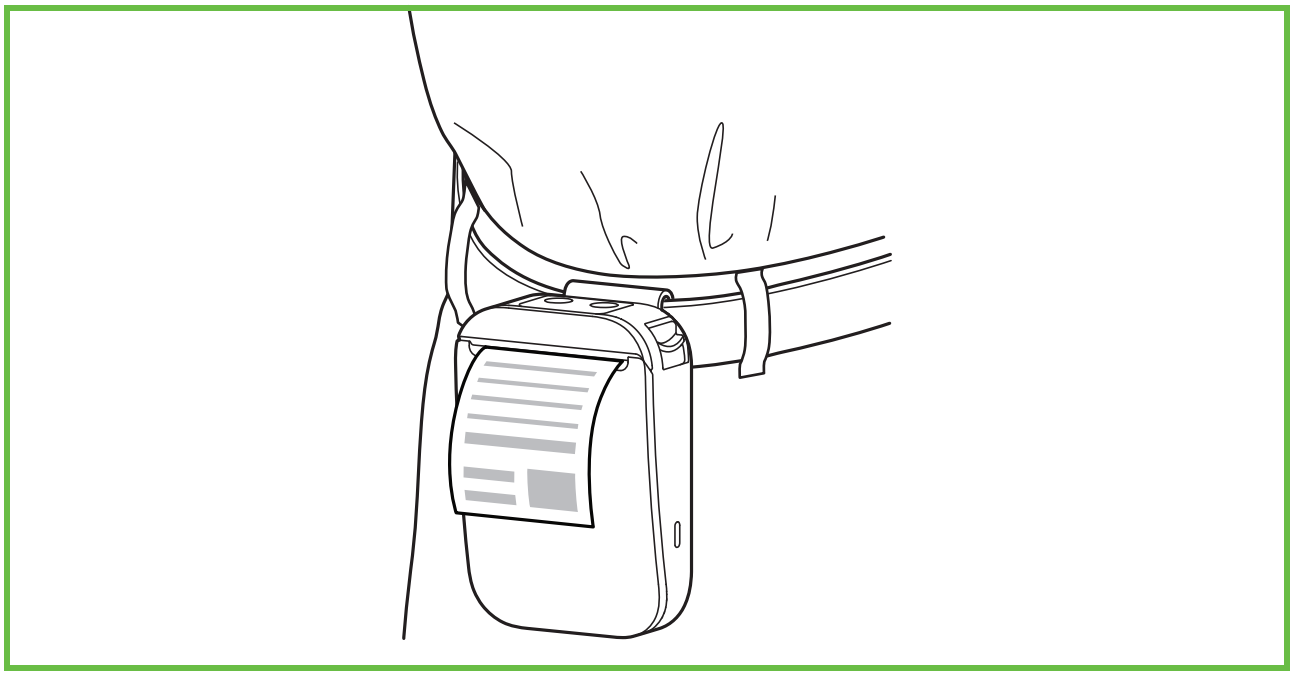

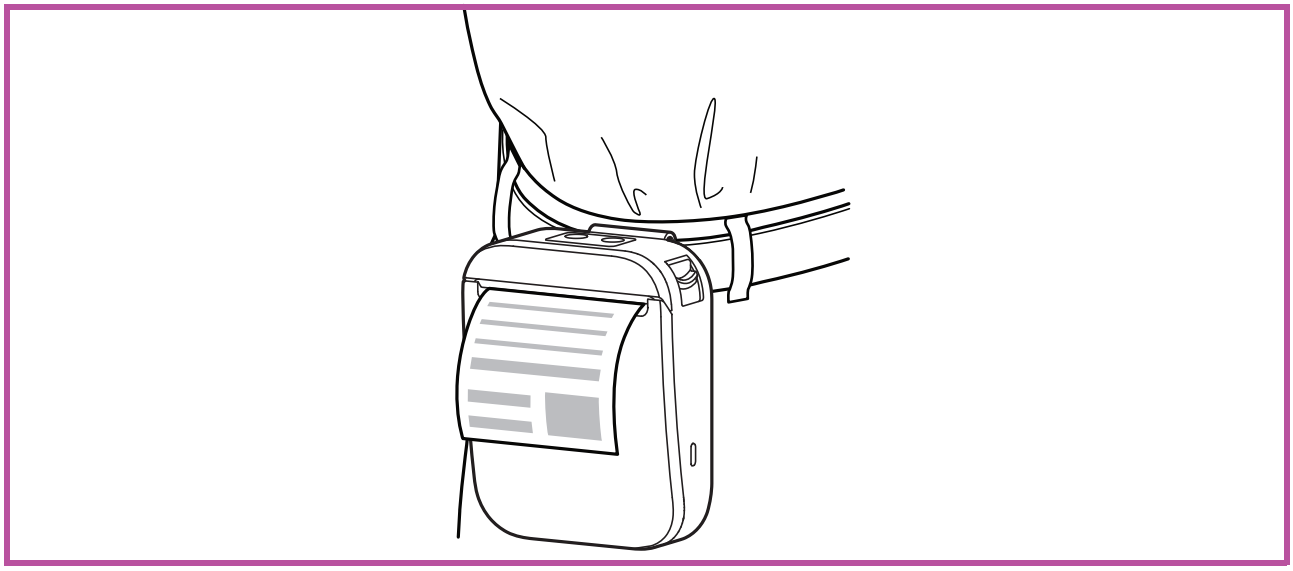

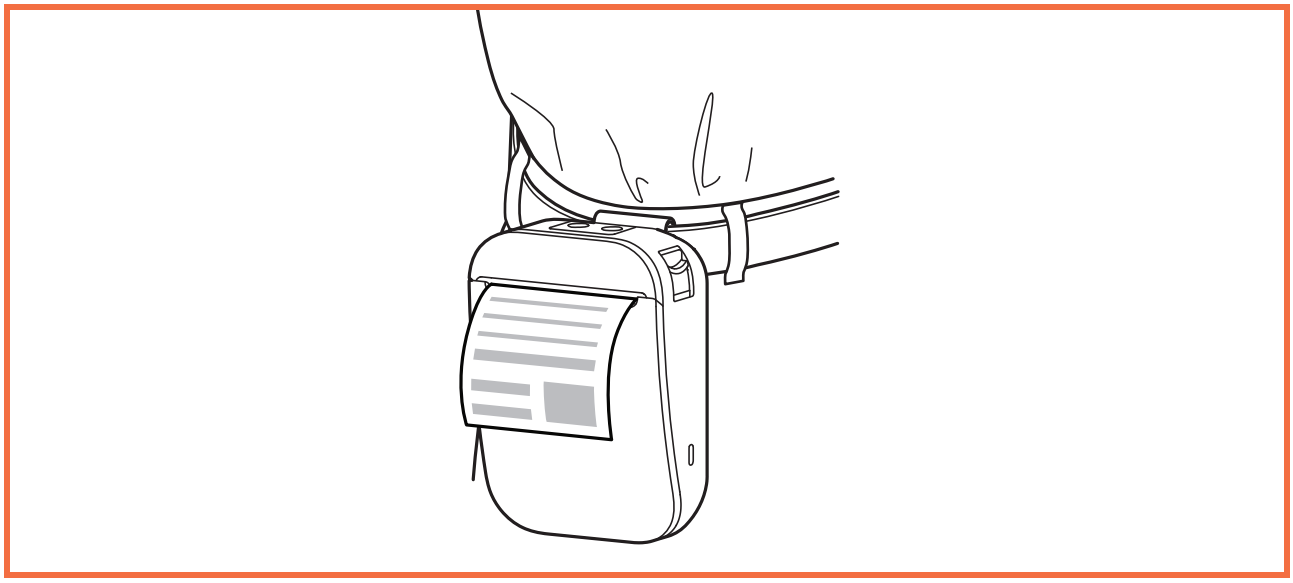

Placing the Printer on a Flat Surface

When using the printer on a flat surface, it is recommended to remove the belt clip from the printer.

Remove the belt clip as shown below.

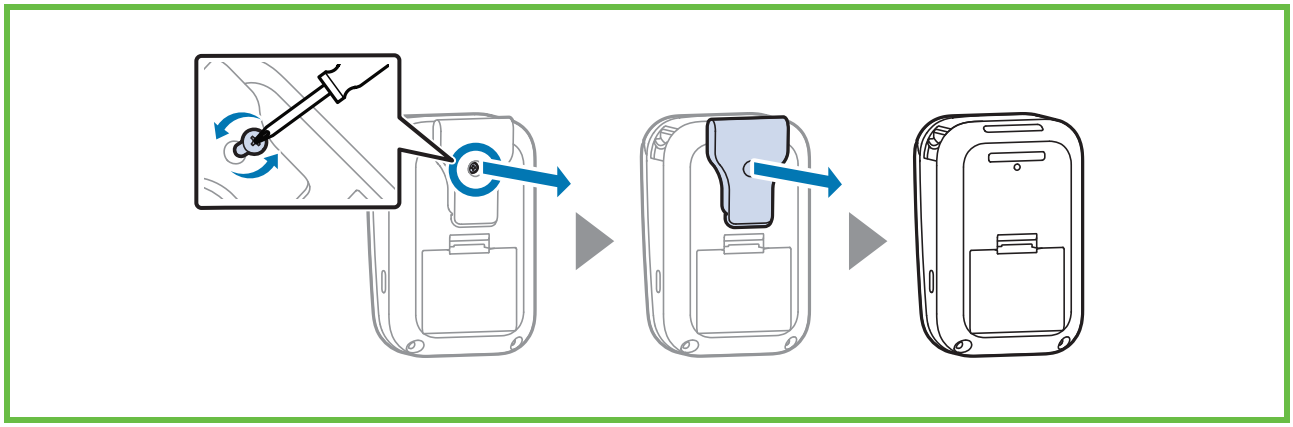

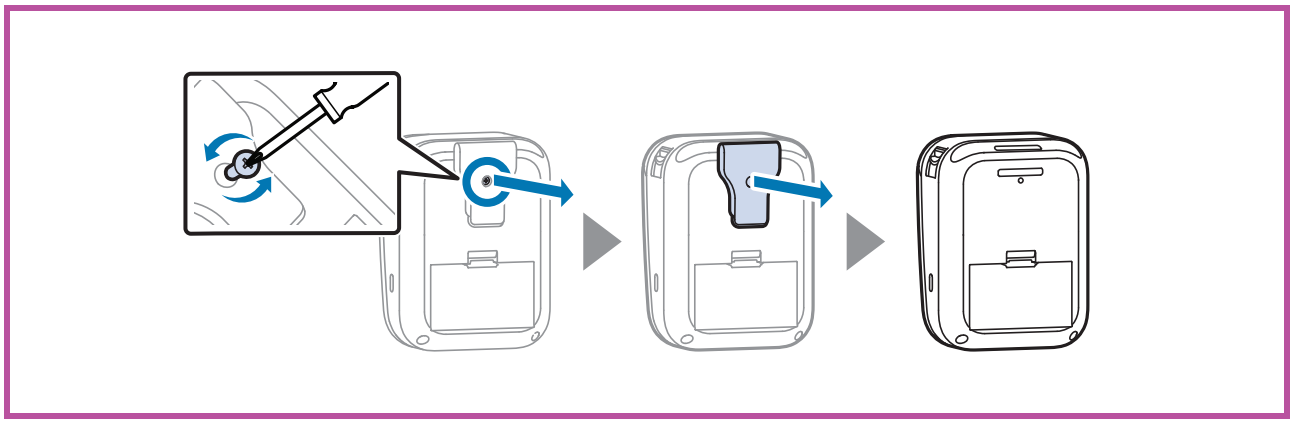

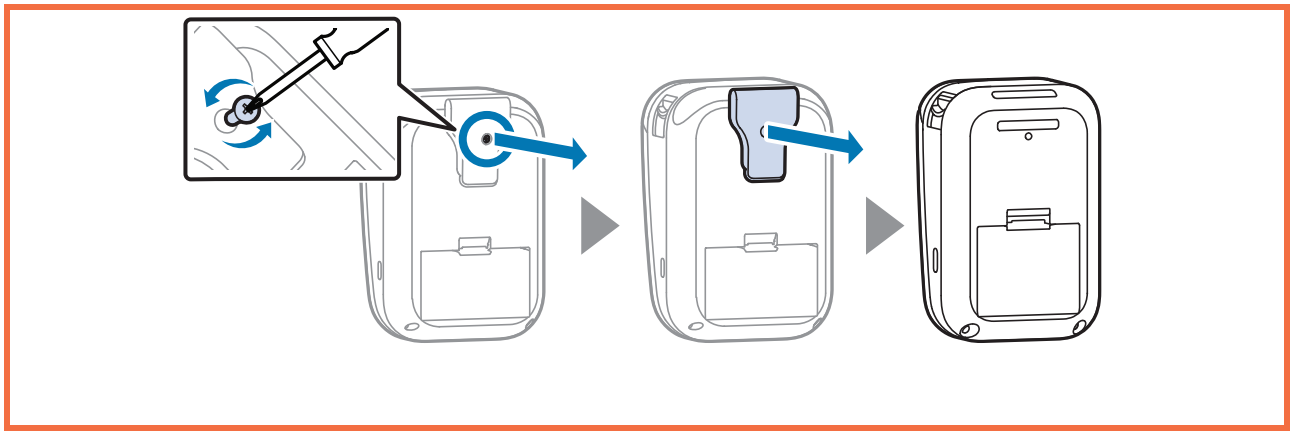

Hanging the Printer

By attaching the belt clip to your belt, you can hang the printer from your waist.

Hang the printer vertically with its operation panel facing up.

CAUTION:

- *Before use, make sure that the belt clip is securely fastened to the printer and that it is not loose. Looseness may cause the printer to drop, resulting in injury or accident.*
- *Be careful not to drop the printer when hanging it with the belt clip.*

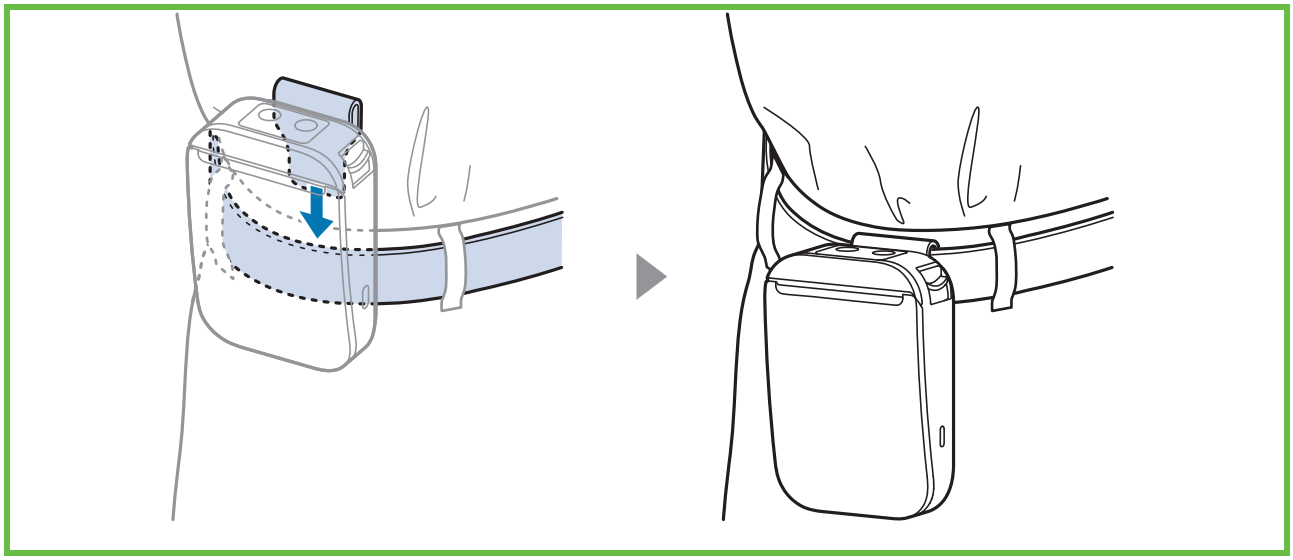

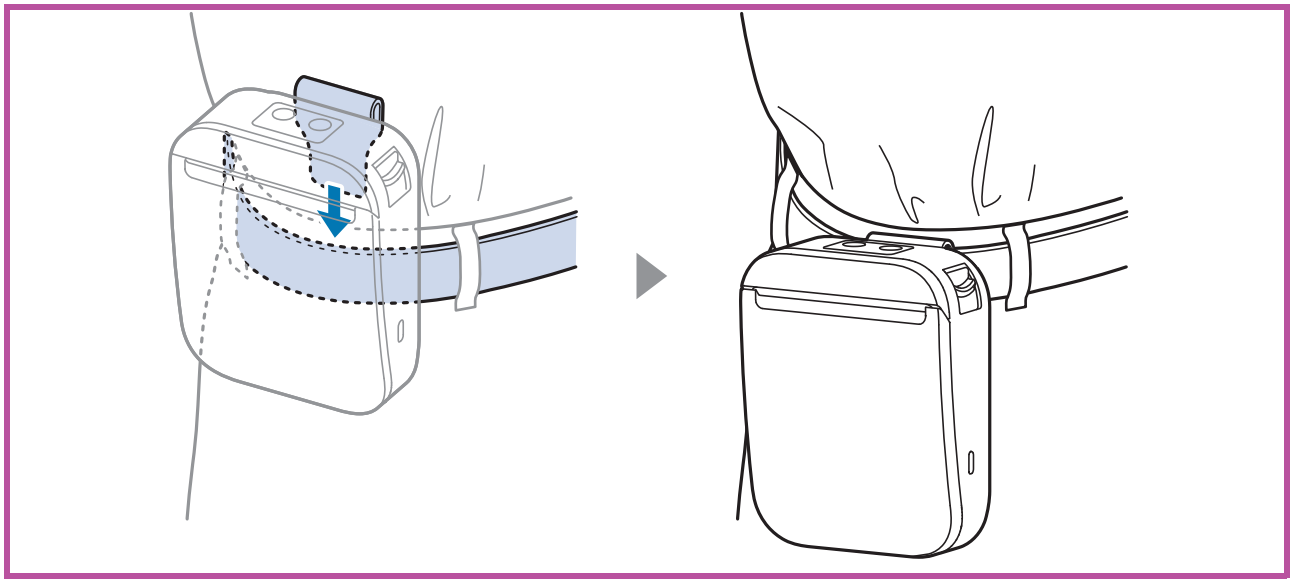

Basic Operations

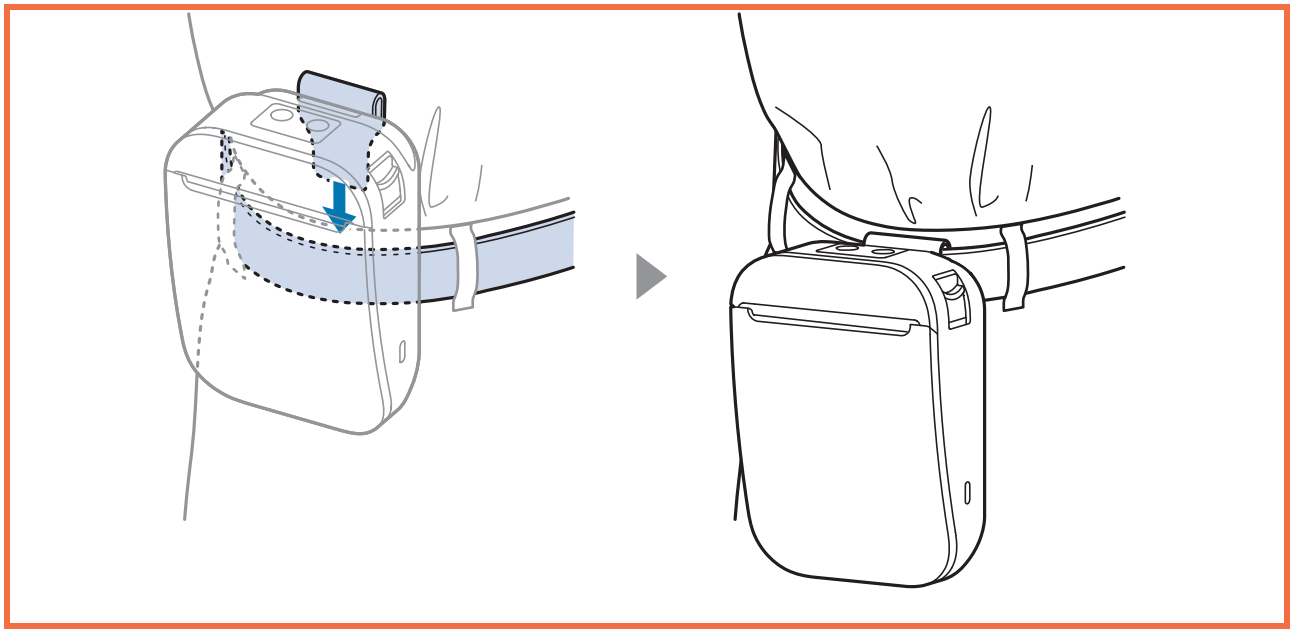

Installing the Battery

The printer does not work without the battery installed.

WARNING:

Always use a OT-BY20 battery.

Use of batteries other than OT-BY20 may result in fire, explosion, leakage, overheating, or other damage.

Always use a OT-BY80II battery.

Use of batteries other than OT-BY80II may result in fire, explosion, leakage, overheating, or other damage.

Always use a OT-BY80II battery.

Use of batteries other than OT-BY80II may result in fire, explosion, leakage, overheating, or other damage.

CAUTION:

- *Be sure to turn off the printer before removing the battery.*
- *Dispose of used batteries according to your local instructions.*

How to Install the Battery

Insert the battery so that its tabs engage with the grooves on the printer, and fit it in until it clicks into place.

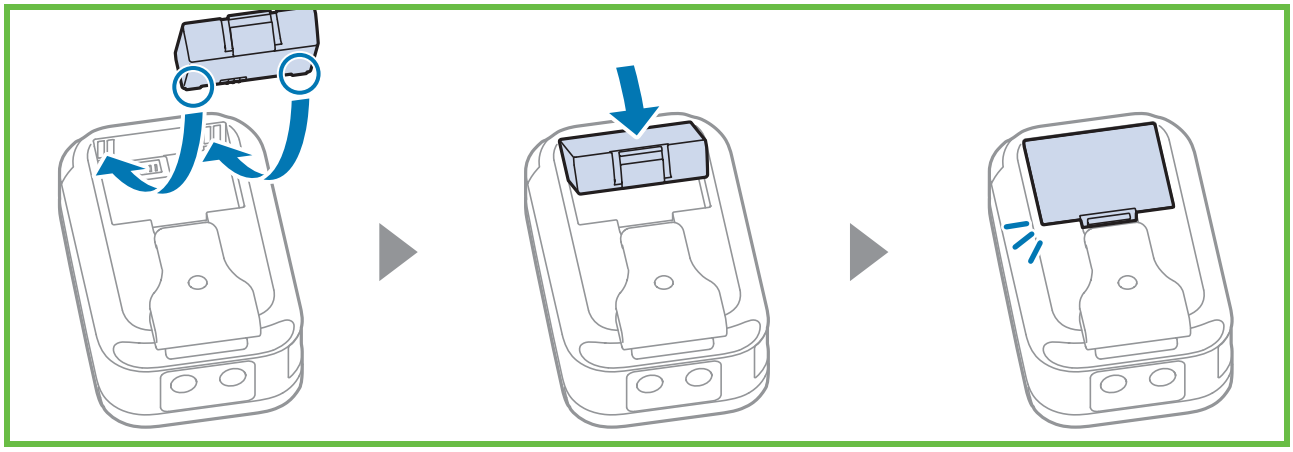

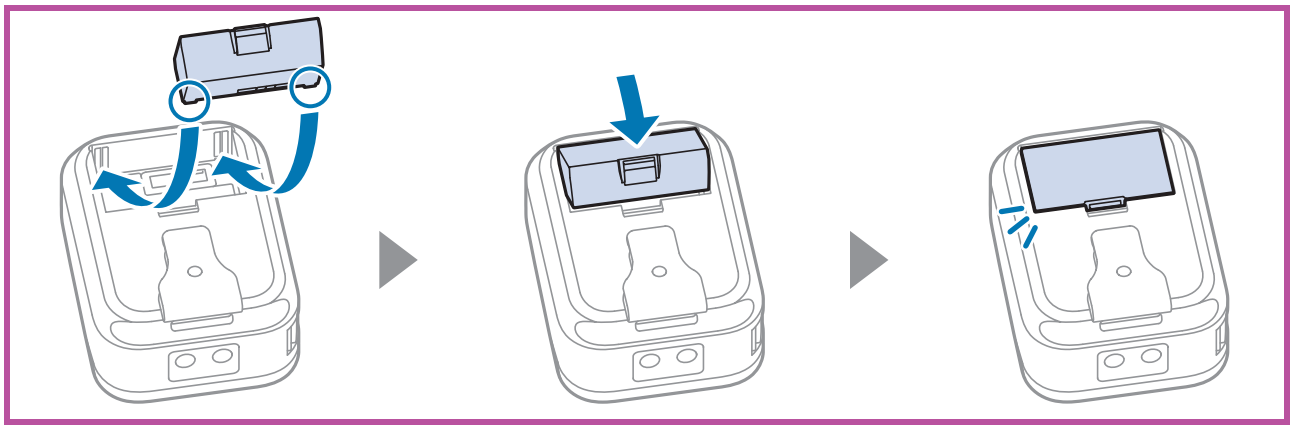

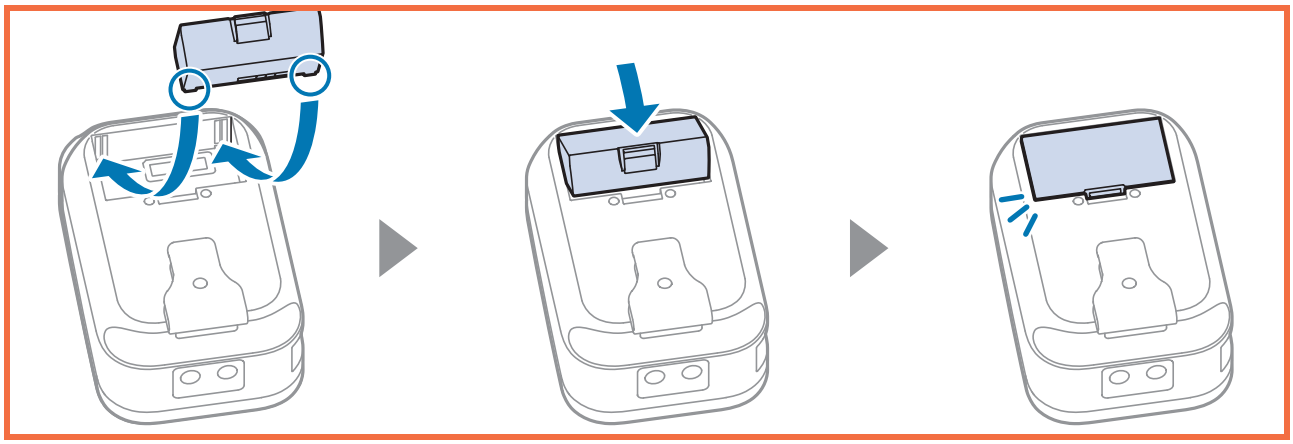

Note:
See "How to Charge the Battery" on page 21 for instructions on how to charge the battery.

How to Remove the Battery

1. Turn off the printer.
2. While pushing the battery hook, raise the battery and remove it.

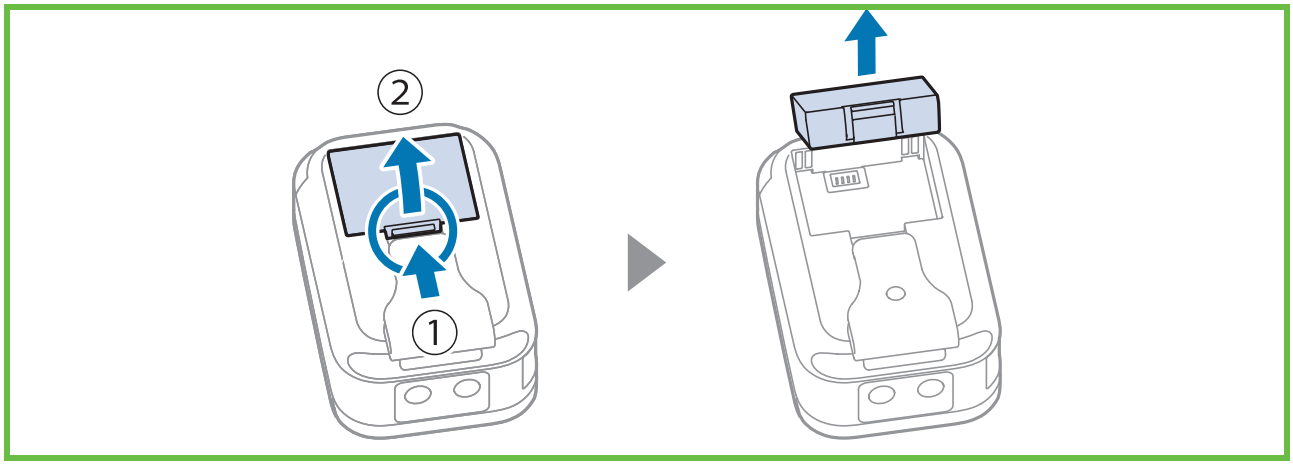

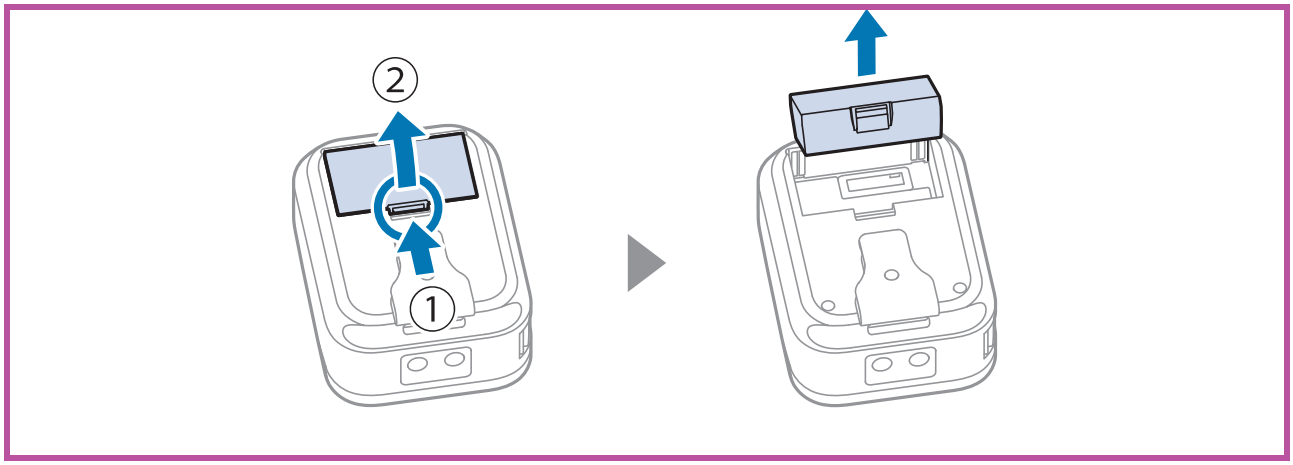

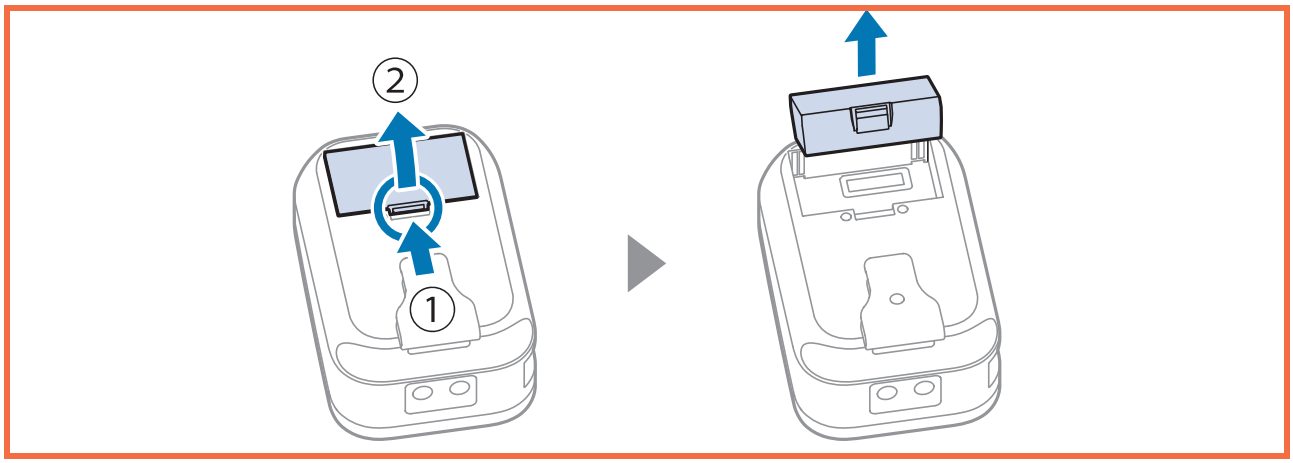

How to Charge the Battery

CAUTION:

- *When charging the battery, install the battery to the printer.*
- *Charge the battery in an environment of approximately 0 to 40 ℃ (32 to 104 ℉).*

Note:

- *When the printer is used for the first time, the battery needs to be charged for approximately 3 hours.*
- *When the printer is used for the first time, the battery needs to be charged for approximately 2.5 hours.*
- *When the printer is used for the first time, the battery needs to be charged for approximately 2.5 hours.*
- *Use a USB power adapter or USB port that complies with the USB standard.*
- *Only USB Type-C standard power mode is supported. The charging time varies depending on the power supply capability and settings of the USB power adapter and port.*

"USB charging" on page 52

1. Connect the included USB cable to the printer.
2. Connect the USB cable to a commercially available USB power adapter or computer.
3. The charge LED lights up when charging starts.

   If the remaining battery charge is almost full, charging will not start.
   Check the battery LED for remaining battery charge.

   "Battery LED" on page 23

4. The charge LED turns off when charging is complete.

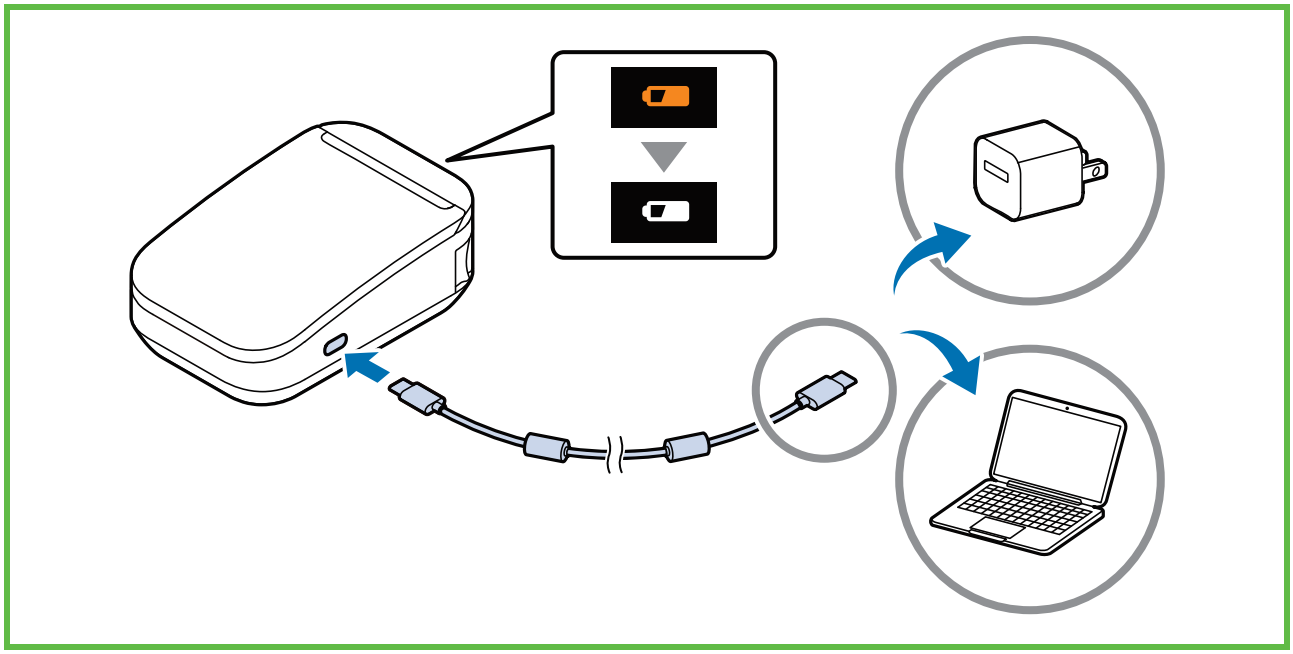

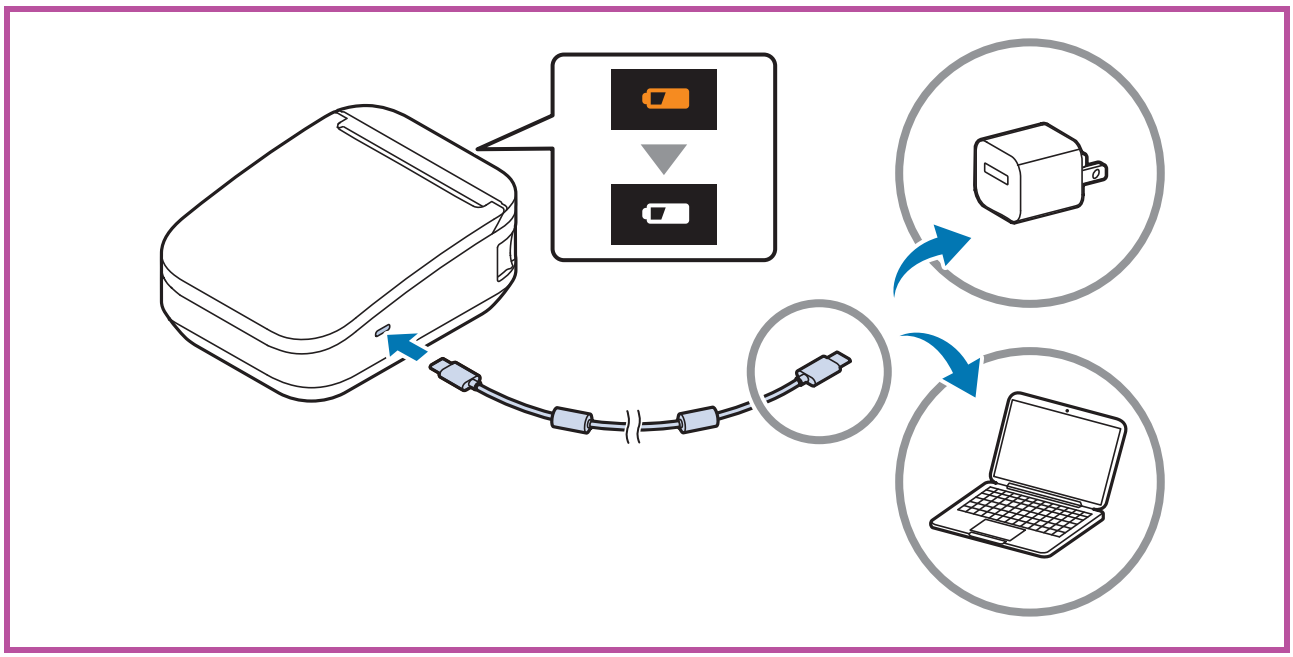

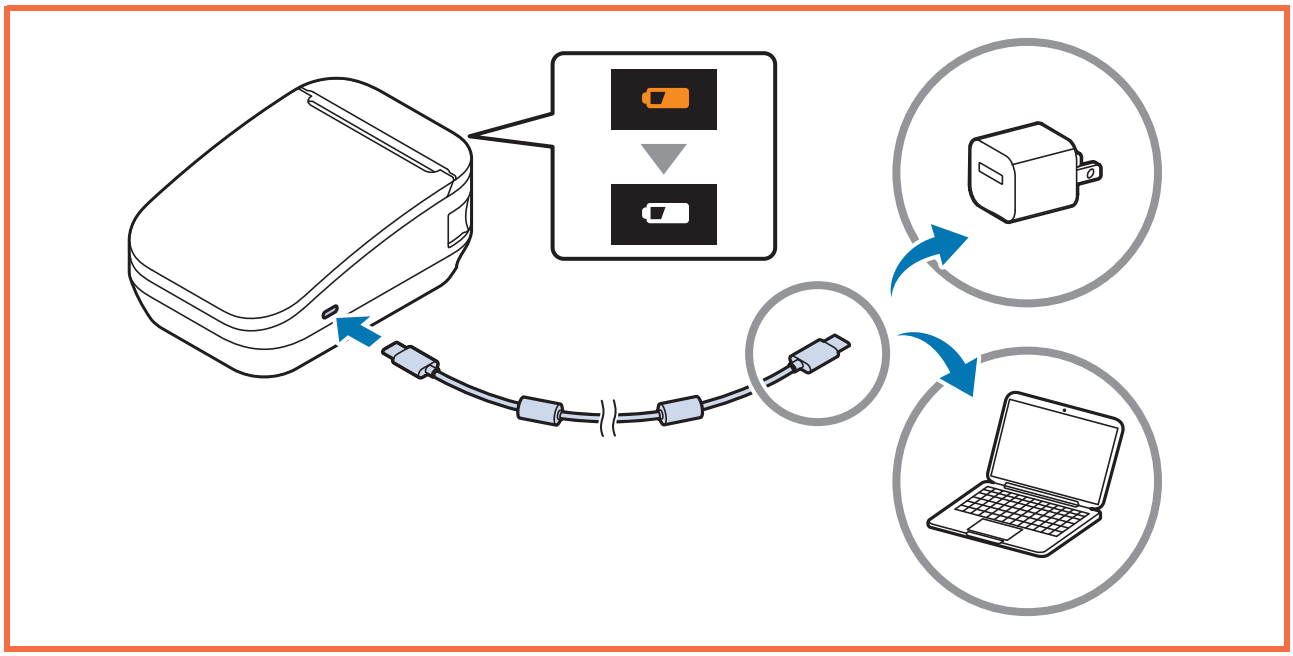

5 Disconnect the USB cable from the printer.

Charge LED

	The battery is charging
	Battery charge error
	Battery is fully charged or not being charged

Battery LED

Indicates remaining battery charge.

The battery LED will not light unless you turn on the printer.

"Turning the Power On" on page 25

Battery LED	Approximate battery level
	60 to 100%
	20 to 60%
	10 to 20%
	10% or less
	0% (printing not available)

Wireless Charging

The battery can be charged using a commercially available wireless charger that supports the Qi standard.

Place the printer so that the symbol on the printer overlaps the position indicated in the wireless charger manual.

The charge LED lights up when charging starts. If the charge LED does not light up, reposition the printer in the correct position.

Check the battery LED for charge level.

"Battery LED" on page 23

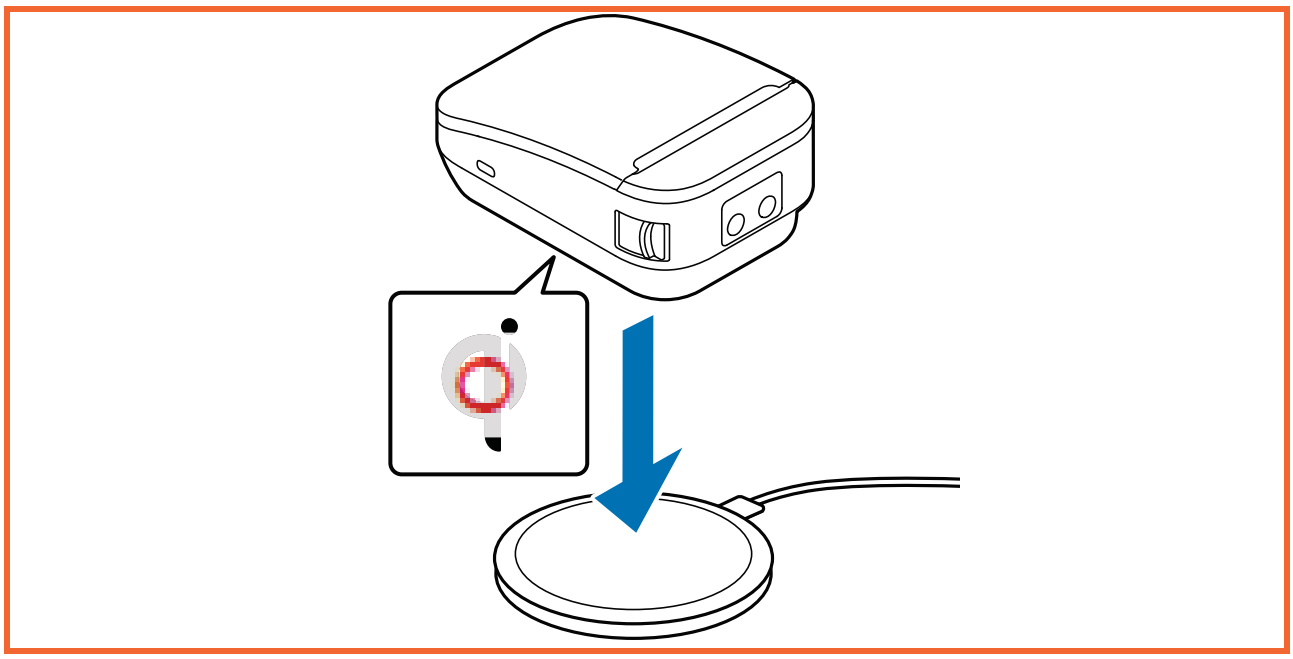

Precautions for Wireless Charging

- For the procedure of wireless charging, refer to the manual of the wireless charger.
- Remove the belt clip when charging wirelessly.

  "Placing the Printer on a Flat Surface" on page 15
- When charging wirelessly, remove the optional belt strap, shoulder strap, and soft case.
- When charging, be sure to correctly align the printer's wireless charging position with that of the wireless charger.
- Be careful not to allow foreign objects to get between the printer and the wireless charger. Foreign objects may generate heat or cause damages, resulting in improper charging.
- Disconnect the USB cable when charging wirelessly. Wireless charging will not work if the printer is connected to a computer or other device.
- The charging time with wireless charging is as follows.
  3 to 6 hours (depending on the specifications of your wireless charger)

Turning the Power On/Off

Turning the Power On

Hold down the ⏻ power button for about one second, and then release it. The ⏻ power LED lights up and the printer is turned on.

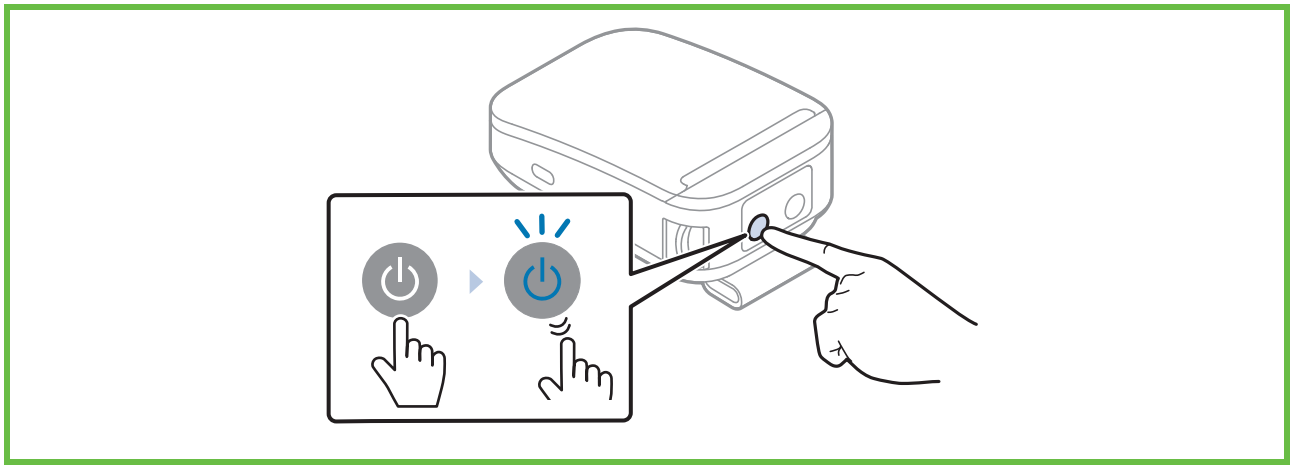

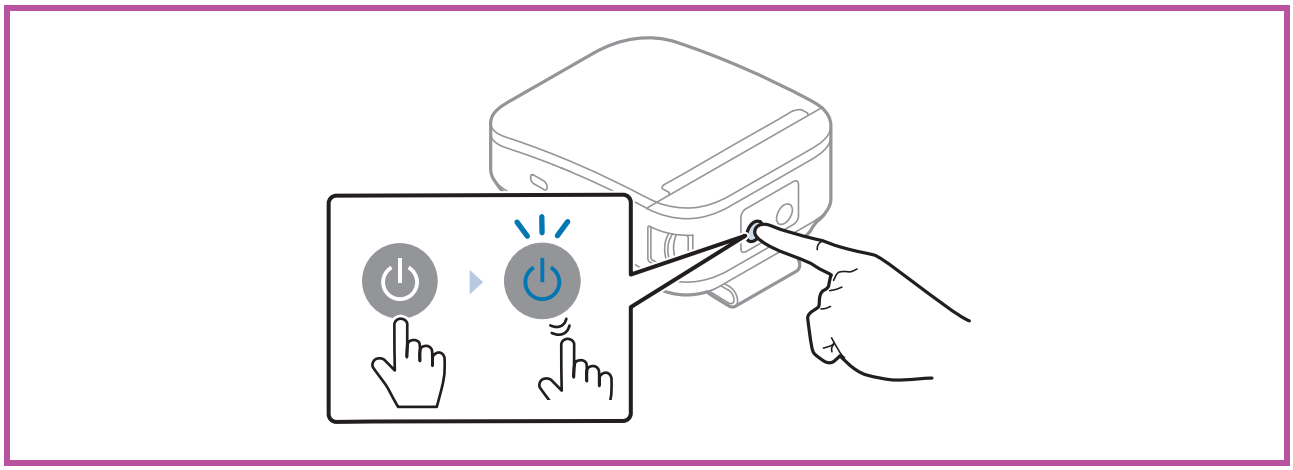

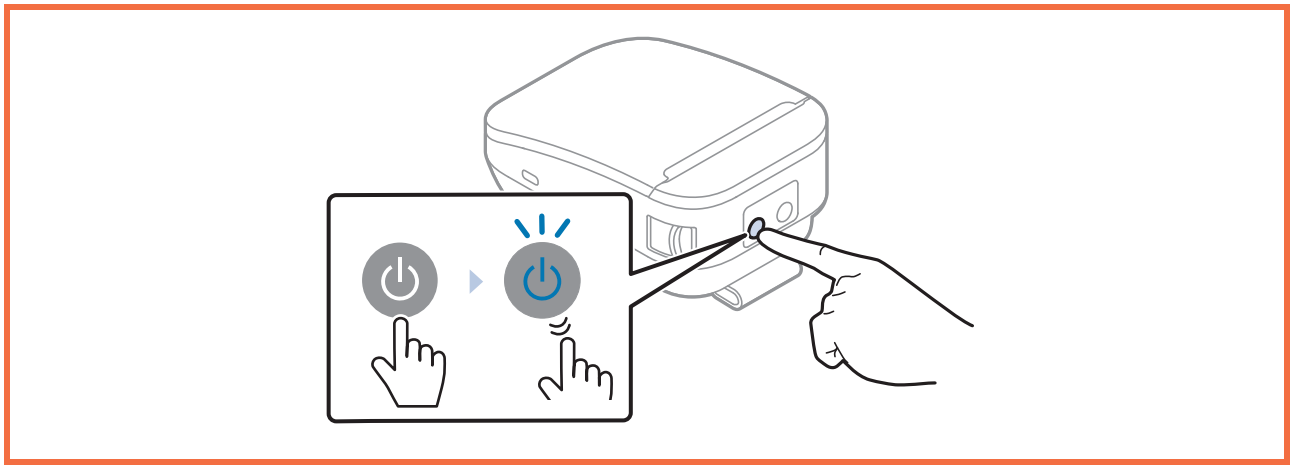

Turning the Power Off

Hold down the ⏻ power button for about two seconds, and then release it. The ⏻ power LED goes off and the printer is turned off.

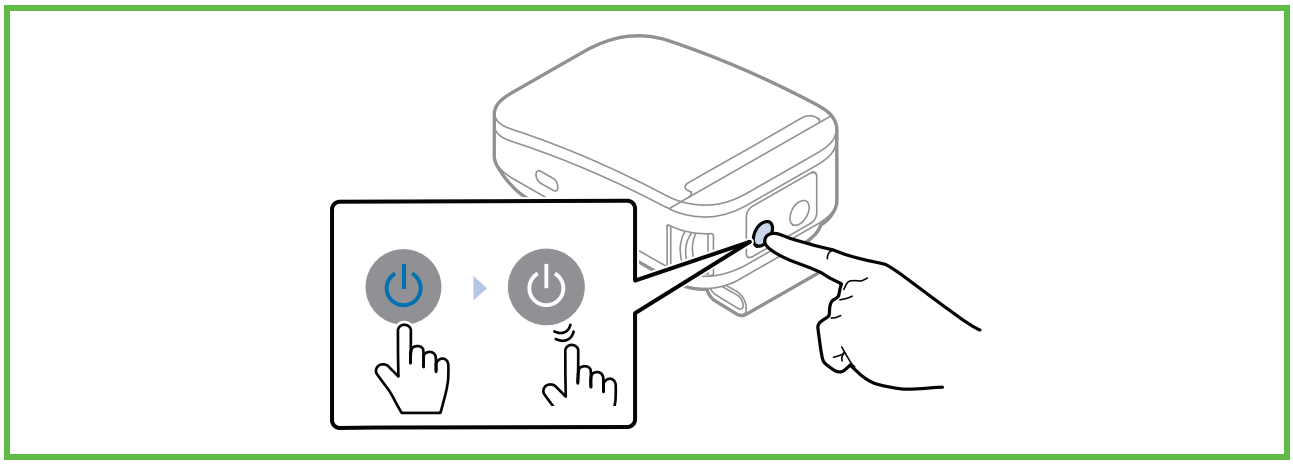

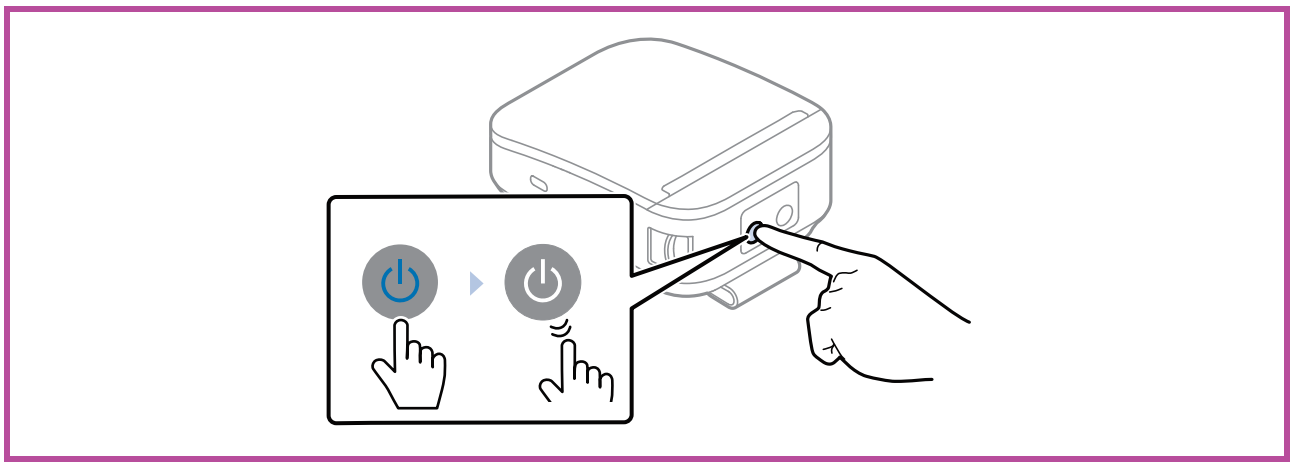

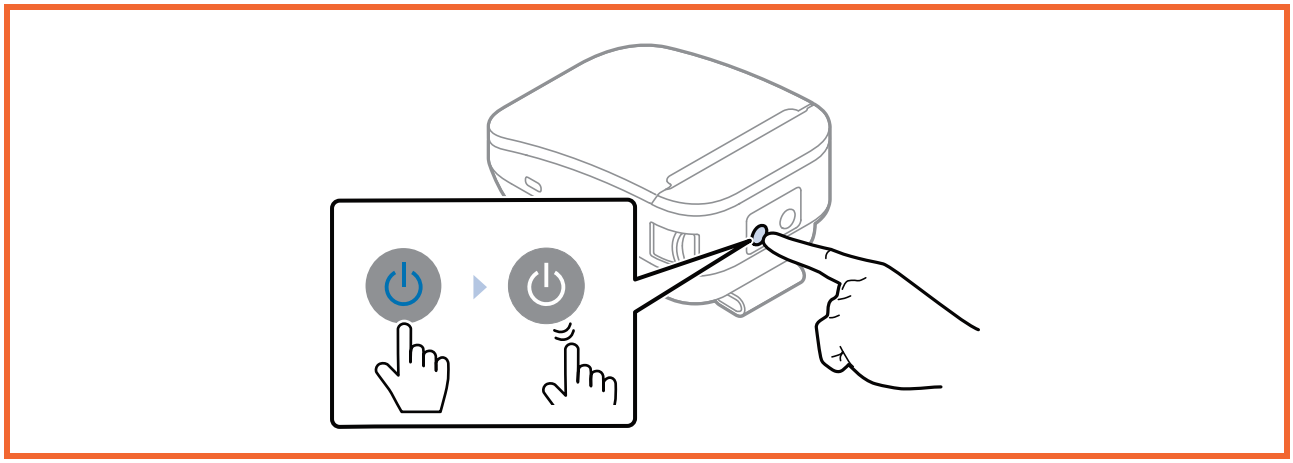

Opening/Closing the Roll Paper Cover

CAUTION:
Be careful not to touch the manual cutter when opening or closing the roll paper cover. The manual cutter may injure your hand.

CAUTION:
Be careful not to touch the manual cutter when opening or closing the roll paper cover. The manual cutter may injure your hand.

How to Open the Roll Paper Cover

Press the cover open lever to open the roll paper cover.

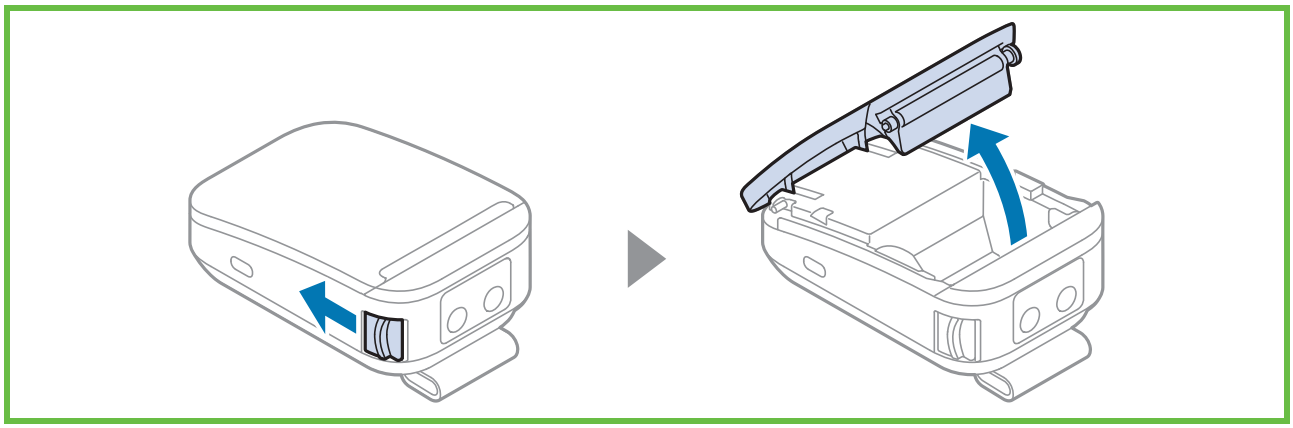

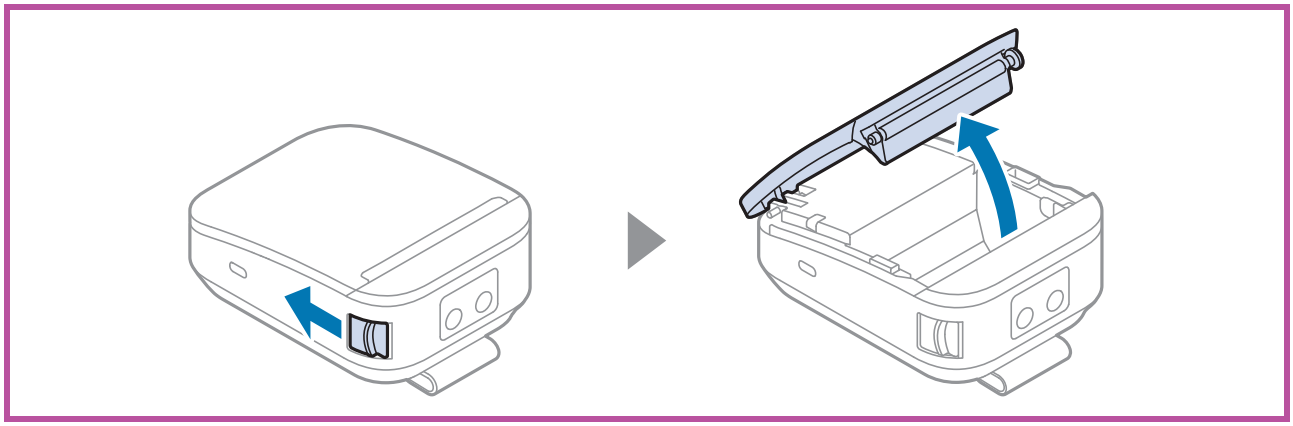

Basic Operations

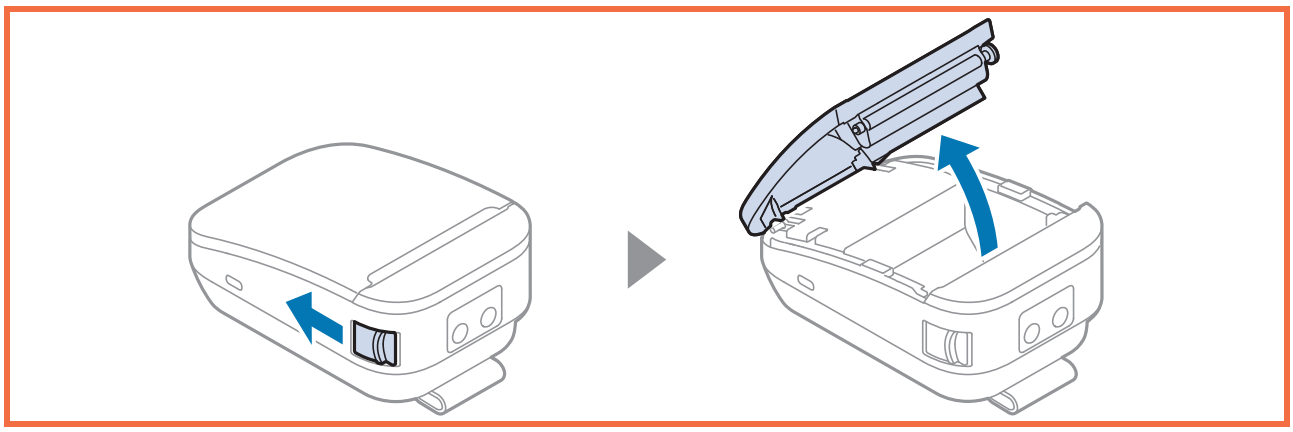

CAUTION:
Be careful not to touch the protrusions on the roll paper cover. Your hands or clothes may be contaminated with oil.

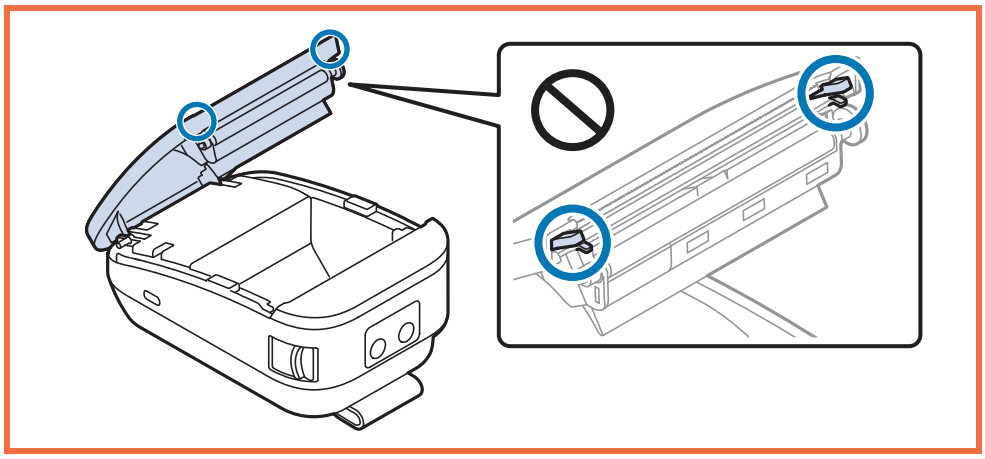

How to Close the Roll Paper Cover

Press both sides of the roll paper cover and close it tightly until it clicks into place.

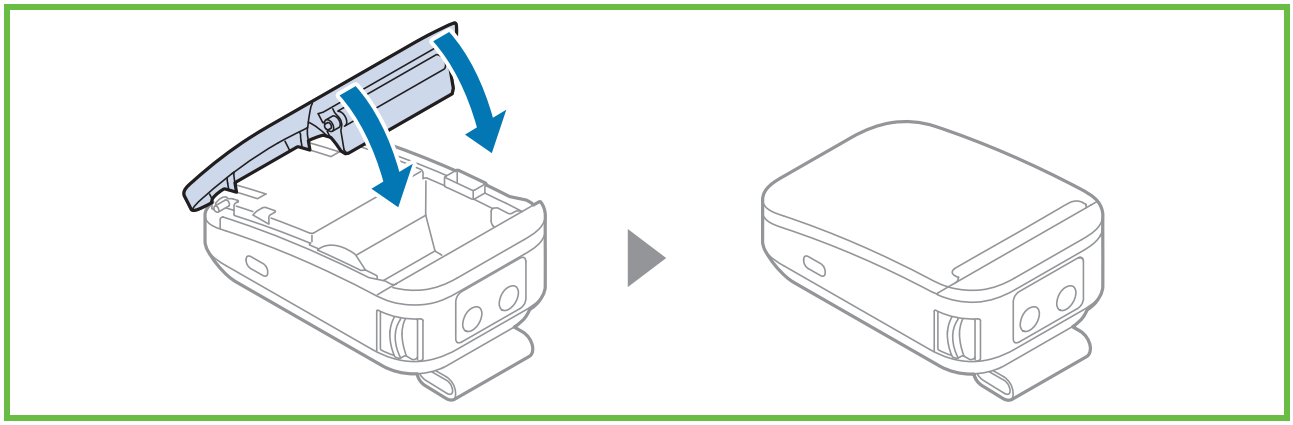

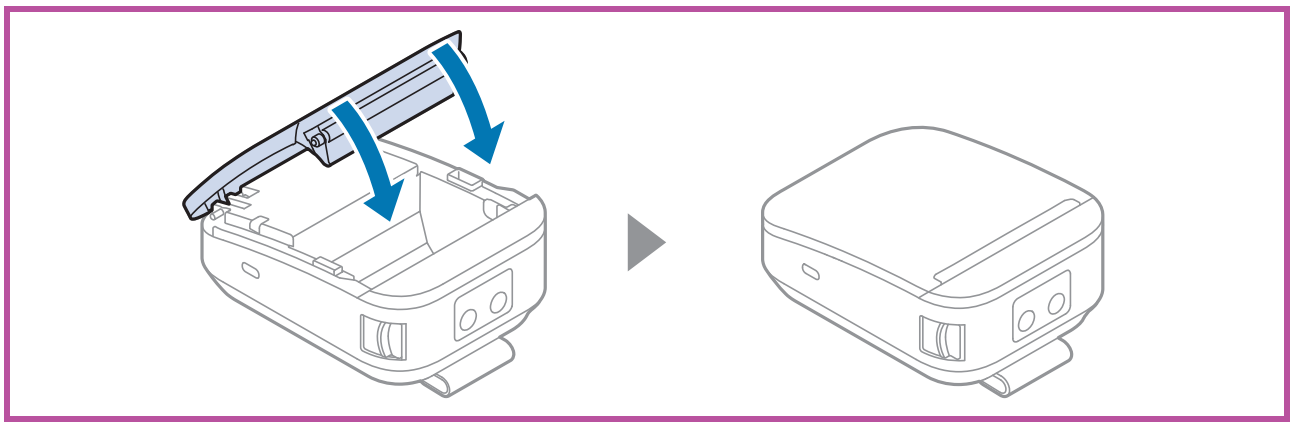

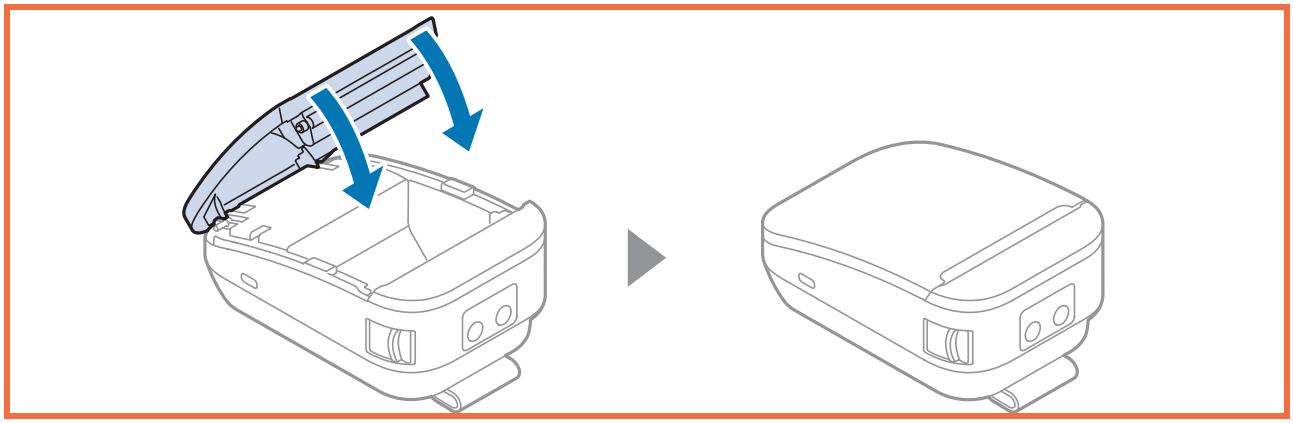

Installing or Replacing the Roll Paper

Follow the steps below to install or replace the roll paper.

CAUTION:

- *Be careful not to touch the manual cutter when installing or removing the roll paper. The manual cutter may injure your hand.*
- *Be careful not to touch the manual cutter when installing or removing the roll paper. The manual cutter may injure your hand.*
- *Make sure you use a specified roll paper type.*
- *Before installing the roll paper, take up any slack in the roll paper by pulling its leading edge. If you install a slack roll paper, a paper jam or print quality problems may occur.*
- *Before installing the roll paper, make sure that the roll paper is not deformed. Using a deformed roll paper will cause the printer to malfunction.*

1. Open the roll paper cover.

"How to Open the Roll Paper Cover" on page 27

2. Remove the used roll paper core if any.
3. Install the roll paper in the correct direction.

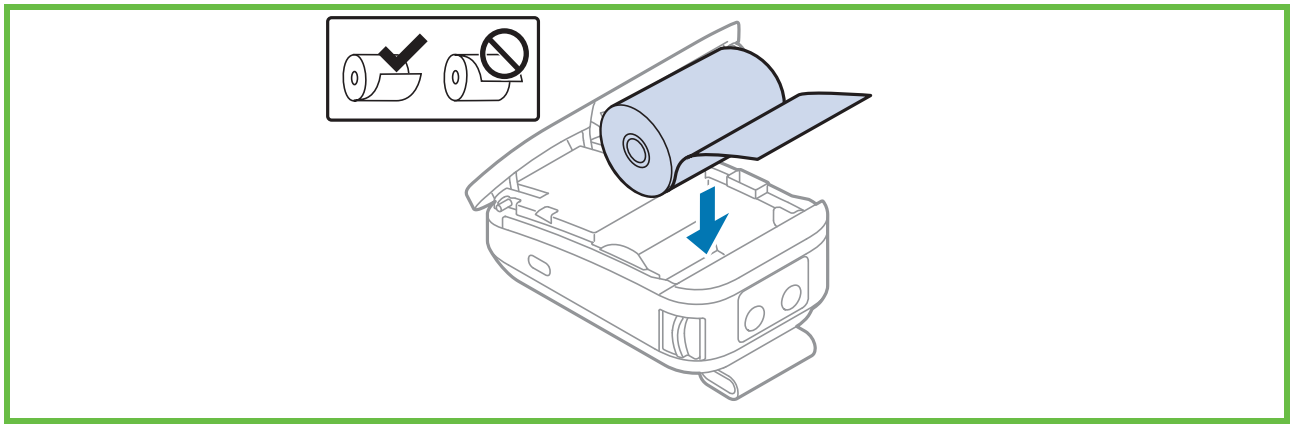

4 Pull out some paper, and close the roll paper cover.

"How to Close the Roll Paper Cover" on page 29

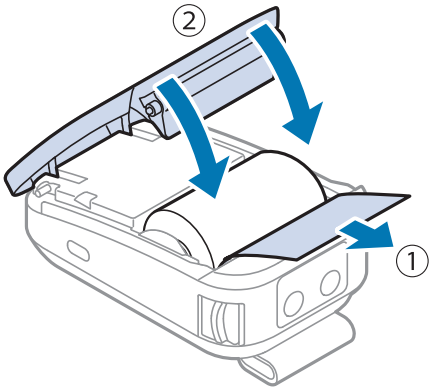

5 Cut out the roll paper that you pulled out.

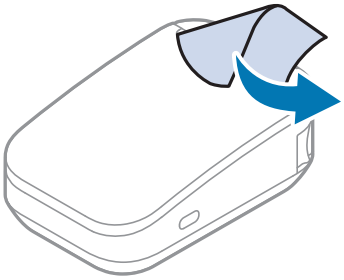

1 Open the roll paper cover.

"How to Open the Roll Paper Cover" on page 27

2 Remove the used roll paper core if any.

3 Install the roll paper in the correct direction.

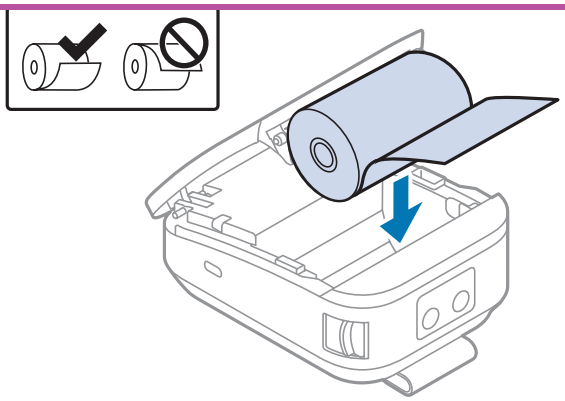

4 Pull out some paper, and close the roll paper cover.

"How to Close the Roll Paper Cover" on page 29

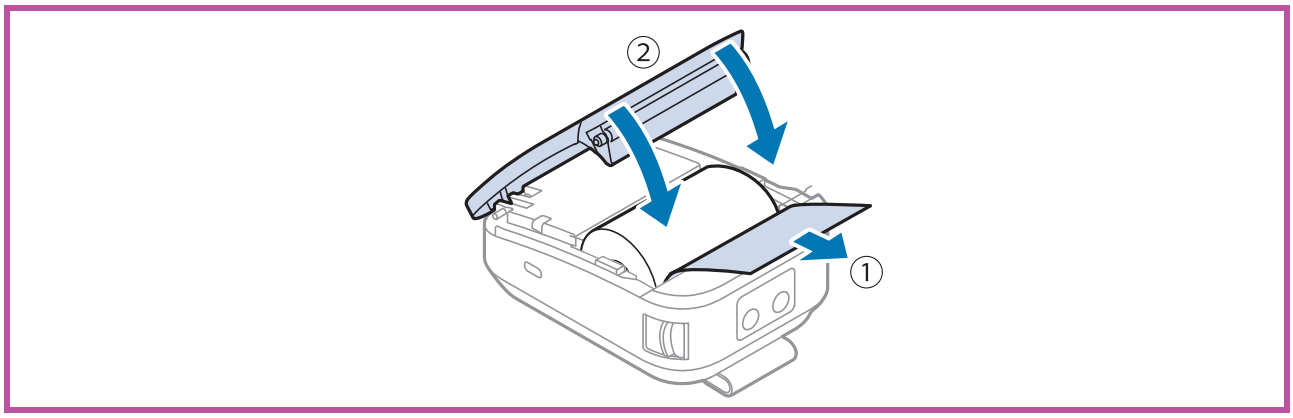

5 Cut out the roll paper that you pulled out.

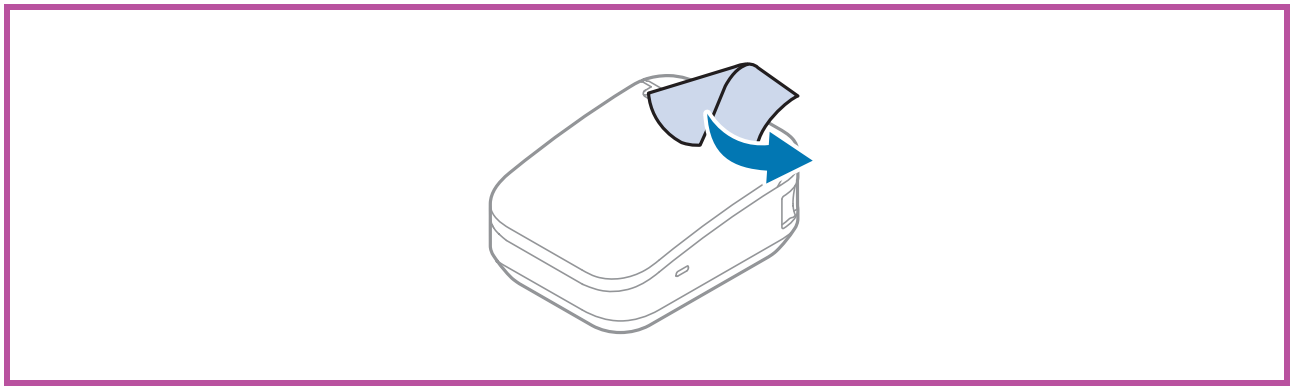

1 Turn on the printer.

2 Open the roll paper cover.

"How to Open the Roll Paper Cover" on page 27

3 Remove the used roll paper core if any.

4 Install the roll paper in the correct direction.

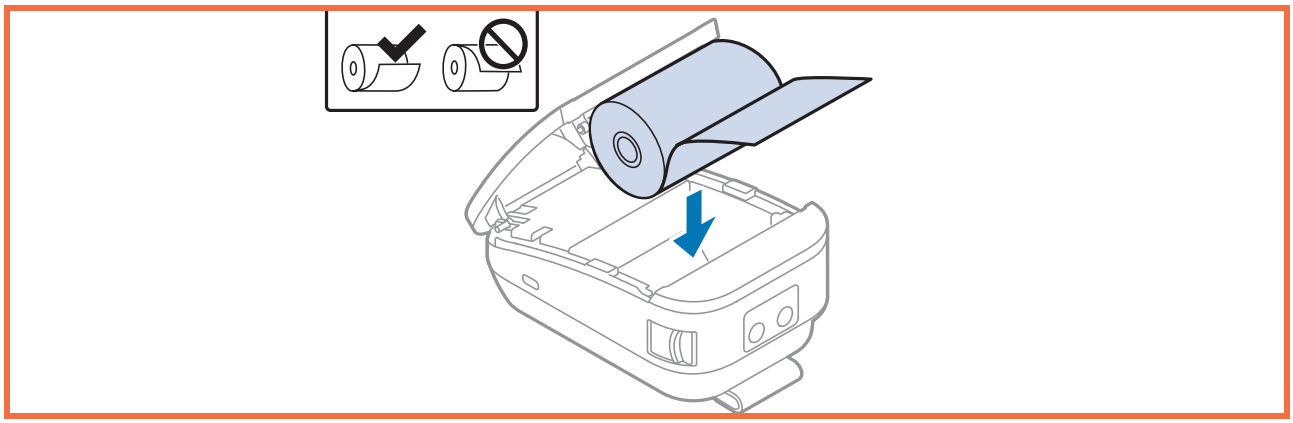

5 Pull out some paper, and close the roll paper cover.

If the printer is turned on, the roll paper is automatically cut.

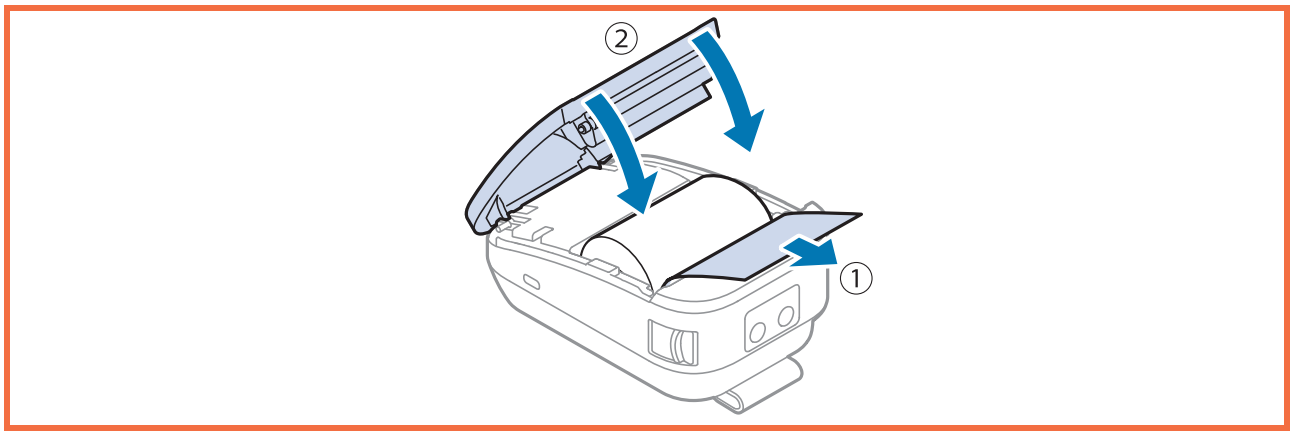

Anti-Curl Function

The printer is equipped with the anti-curl function. The function reduces the curl of the roll paper after printing.

Disabling the anti-curl function speeds up printing.

How to Disable the Anti-Curl Function

1. Open the roll paper cover.

"How to Open the Roll Paper Cover" on page 27

2. Remove the roll paper in use, if any.
3. Remove the part for the anti-curl function as shown below.

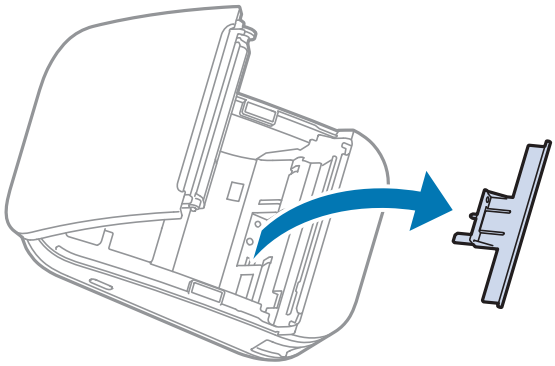

4. Install the roll paper and close the roll paper cover.

"Installing or Replacing the Roll Paper" on page 30

Note:
To activate the anti-curl function, install the part for the anti-curl function again.

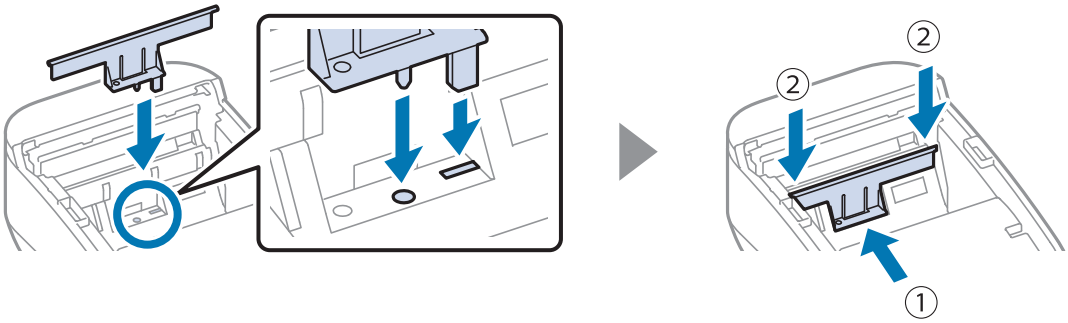

Setup

~~This printer can be connected to a smart device via Wi-Fi or Bluetooth, or to a computer via USB cable.~~

- ~~Wi-Fi model: The printer can be connected via Wi-Fi or with a USB cable~~
- ~~Bluetooth model: The printer can be connected via Bluetooth or with a USB cable~~

Connecting via Wi-Fi (Wi-Fi model)

In order to connect the printer to Wi-Fi, it is necessary to understand the specifications of your network environment. Please check with your network administrator regarding the network environment.

Please see the video for general Wi-Fi connection instructions.

https://www.epson-biz.com/?prd=tm-p202&inf=wireless

https://www.epson-biz.com/?prd=tm-p802&inf=wireless

https://www.epson-biz.com/?prd=tm-p802ac&inf=wireless

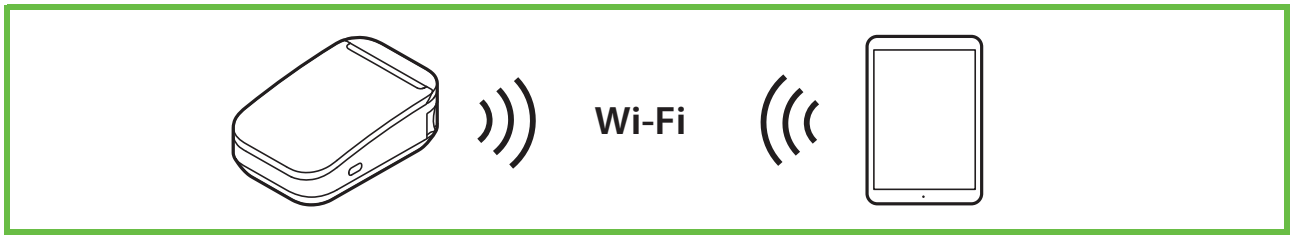

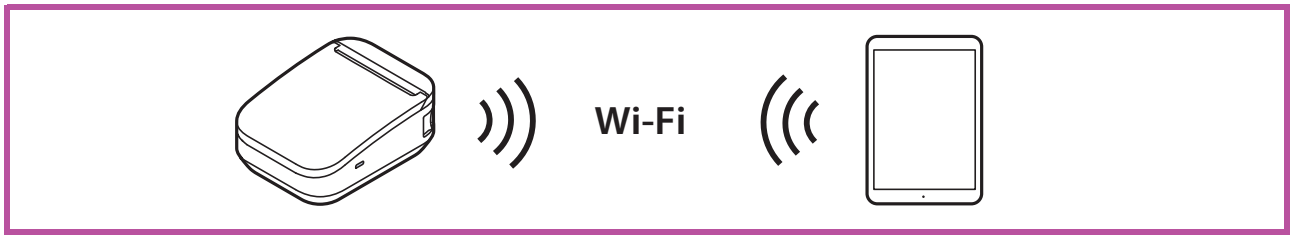

Connecting via Bluetooth (Bluetooth model)

Use the Bluetooth pairing function of the device you are using to establish a connection with the printer.

Please see the video for general Bluetooth connection instructions.

https://www.epson-biz.com/?prd=tm-p202&inf=wireless

https://www.epson-biz.com/?prd=tm-p802&inf=wireless

https://www.epson-biz.com/?prd=tm-p802ac&inf=wireless

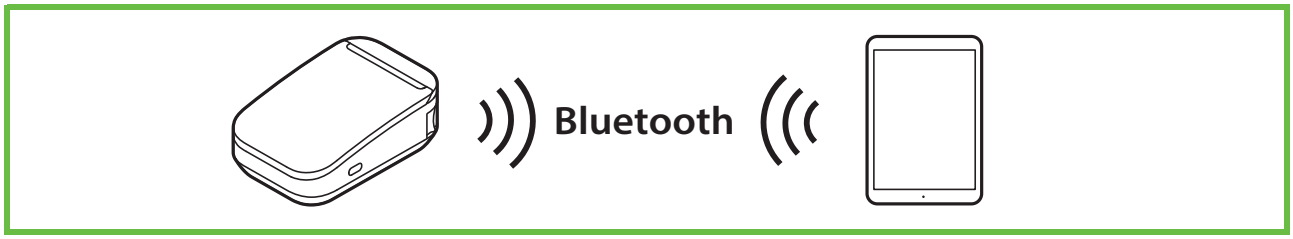

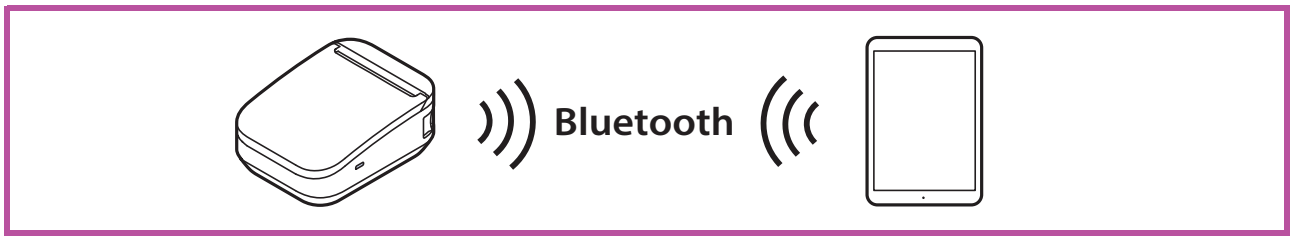

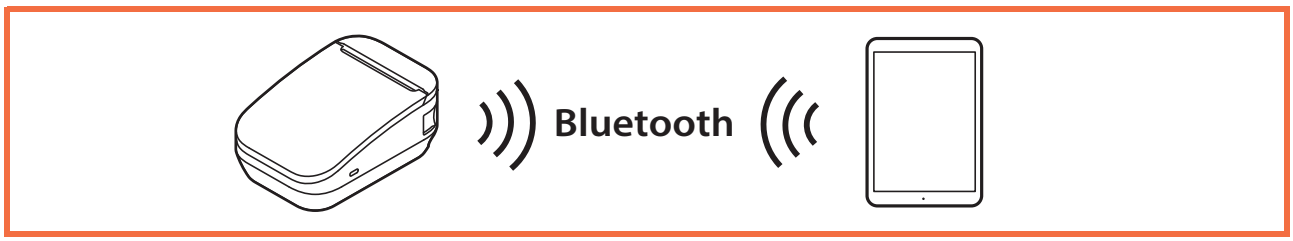

Connecting to the computer(Head A)

Connecting with a USB Cable

Head B

Connect the printer to the computer with the included USB cable or a commercially available USB cable.

1. Turn off the printer.
2. Connects the USB cable to the printer.
3. Connect the USB cable to the computer.

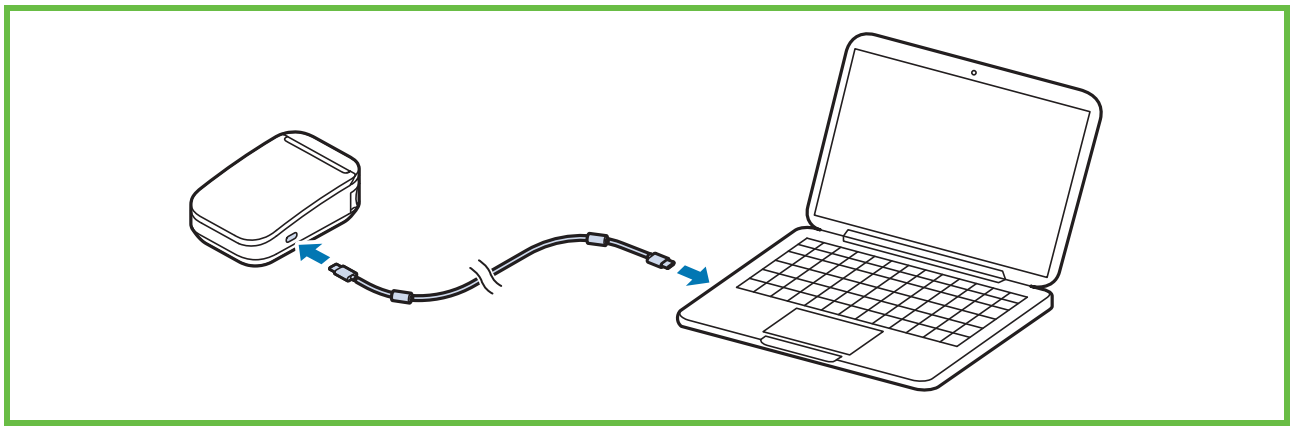

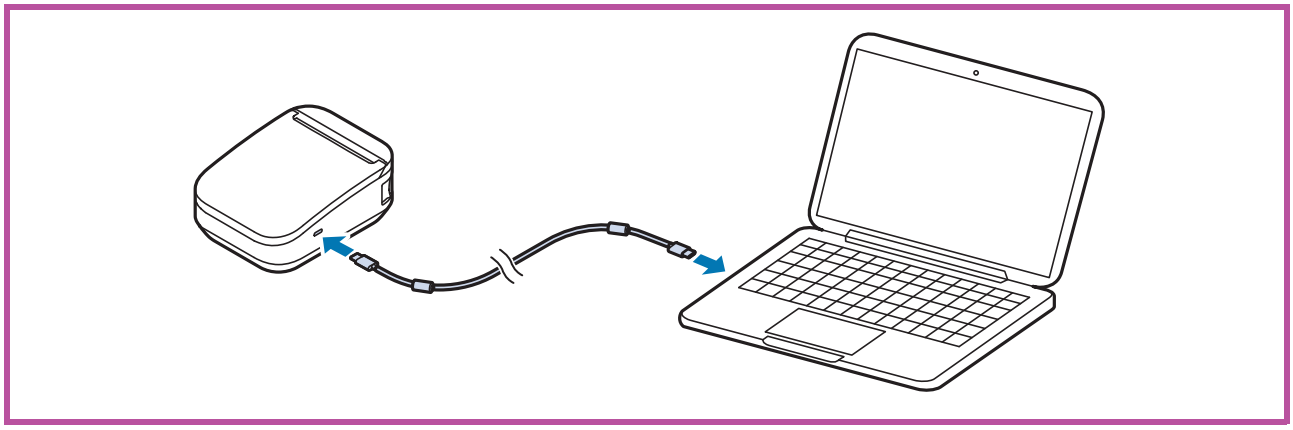

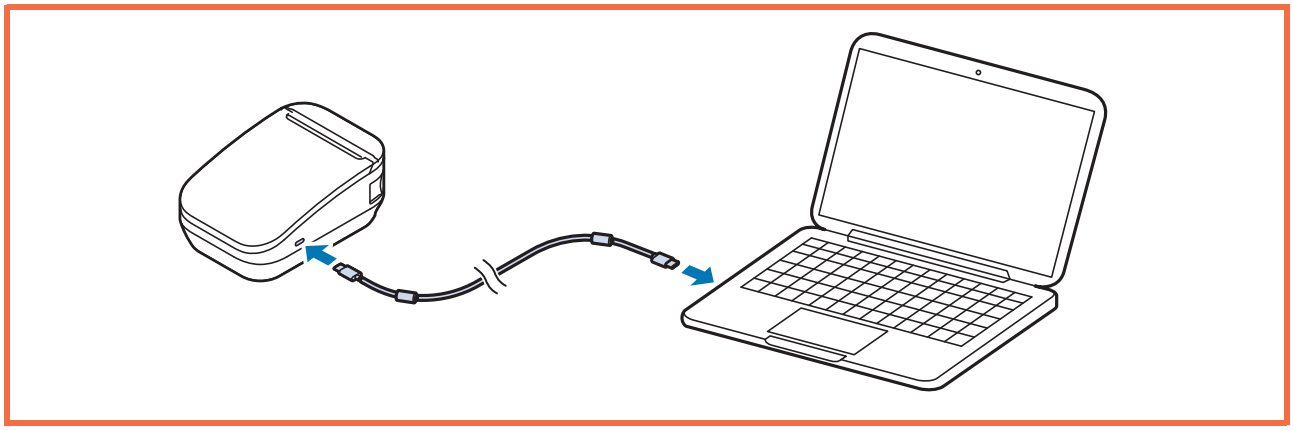

Cleaning

Cleaning the Printer Case

If the exterior surface is noticeably dirty, follow the steps below to clean it.

CAUTION:
Never clean the product with alcohol, benzine, thinner, or other such solvents. Doing so may damage or break the parts made of plastic and rubber.

1. Turn off the printer.
2. Disconnect the USB cable, if it is connected.
3. Wipe off the dirt with a dry or slightly damp cloth.

Cleaning the Thermal Head

Epson recommends cleaning the thermal head to maintain receipt print quality. We recommend cleaning periodically (about once every 3 months).

CAUTION:

- *After printing, the thermal head and its surroundings can be very hot. Be careful not to touch it and to let it cool before you clean it.*
- *Do not damage the thermal head by touching it with your fingers or any hard object.*

1. Turn off the printer.
2. Disconnect the USB cable, if it is connected.
3. Open the roll paper cover and then remove roll paper.
4. Clean the thermal head with a cotton swab moistened with alcohol solvent (ethanol or isopropyl alcohol).

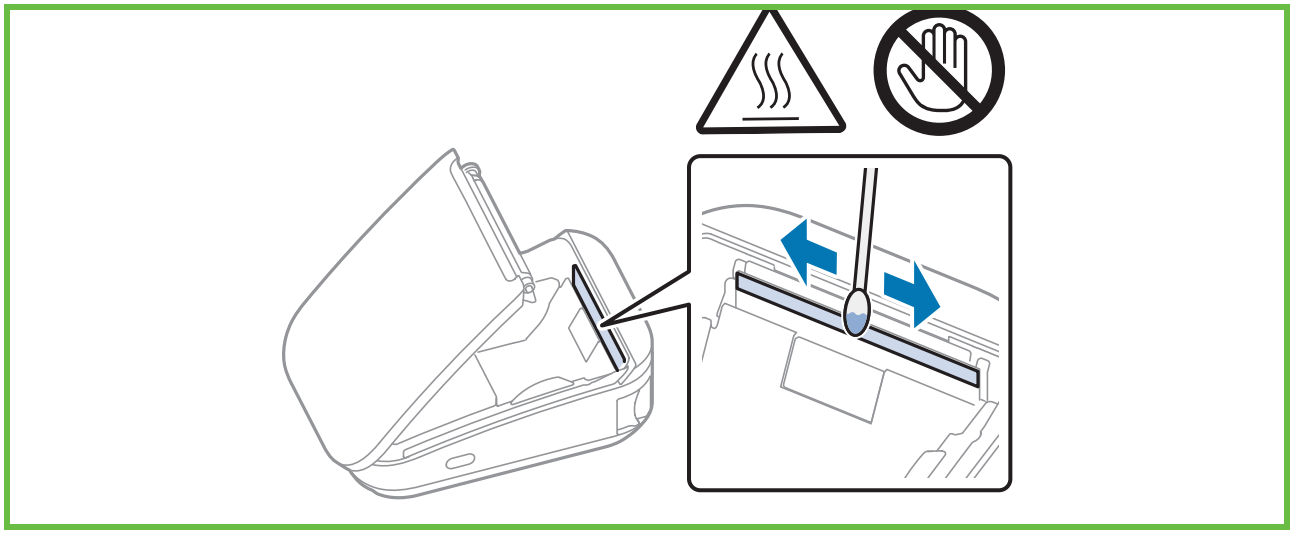

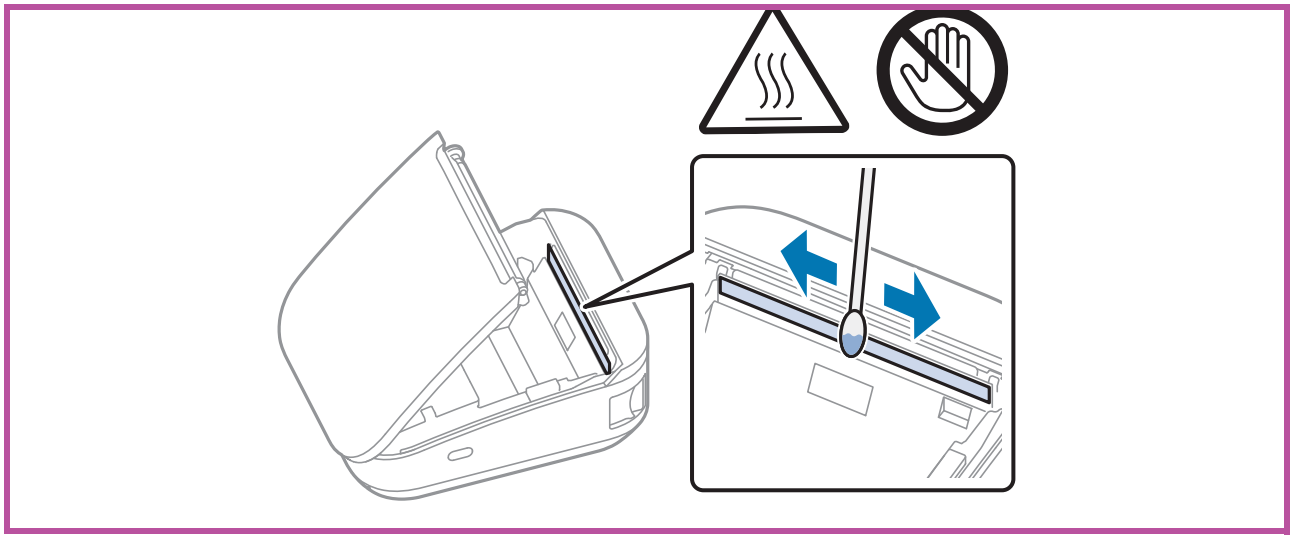

Cleaning

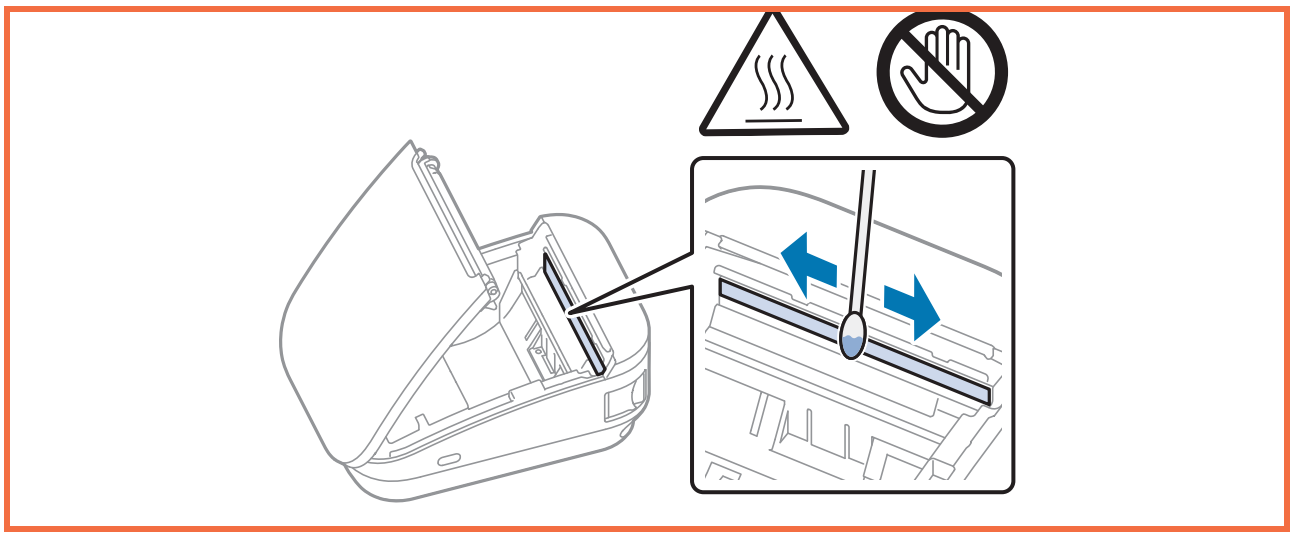

5 When the cleaned area is completely dry, load the roll paper and close the roll paper cover.

Cleaning the Platen Roller and Paper Detector

Depending on the roll paper used, paper dust may stick to the platen roller and the paper may not be fed correctly. Follow the procedure below to remove the paper dust.

To maintain receipt print quality, we recommends cleaning the platen roller and the paper detector periodically (about once every 3 months).

1. Turn off the printer.
2. Disconnect the USB cable, if it is connected.
3. Open the roll paper cover and then remove roll paper.
4. Use a cotton swab lightly moistened with water to remove paper dust from the platen roller and paper detector.

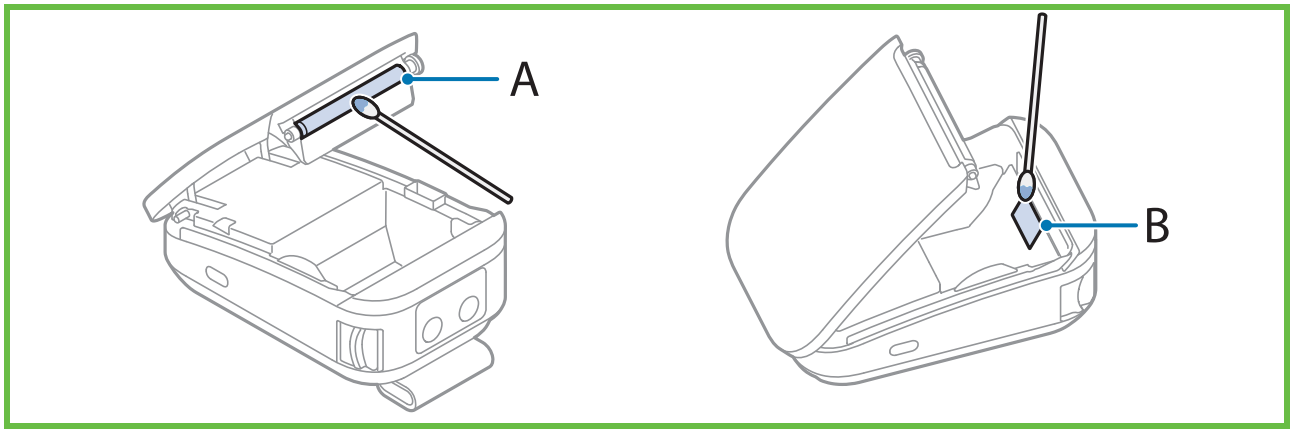

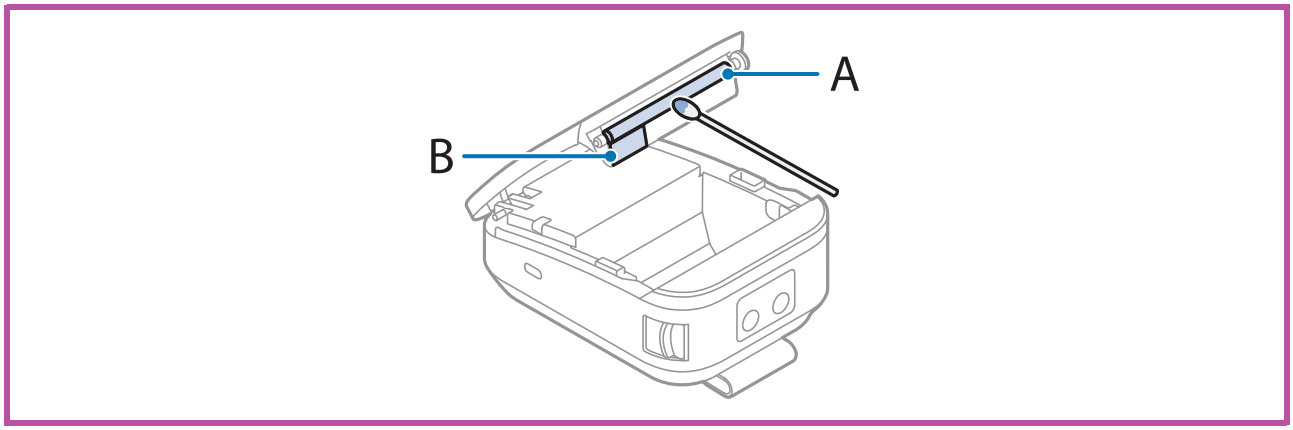

Cleaning

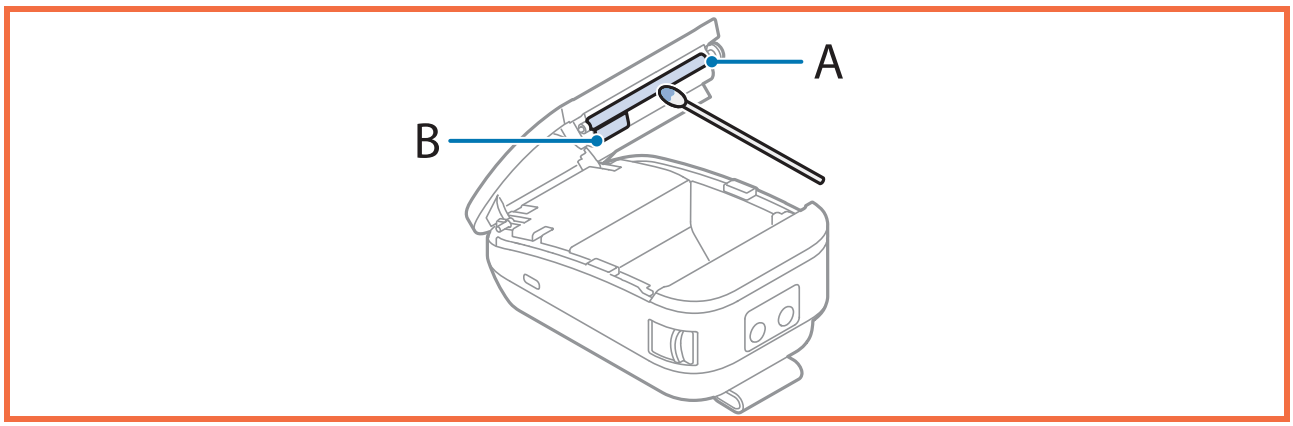

A: Platen roller

B: Paper detector

5 When the cleaned area is completely dry, load the roll paper and close the roll paper cover.

Troubleshooting

QR Code Label

By scanning the QR code on the label attached to the inner side of the roll paper cover, you can access the user's manual.

If you encounter any problems while using the printer, you can use this QR code to quickly check for troubleshooting.

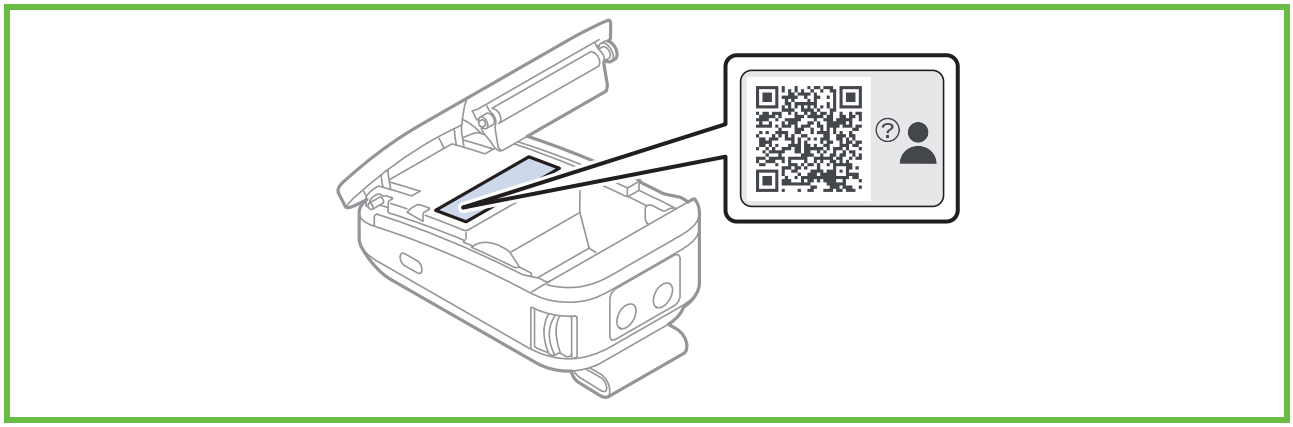

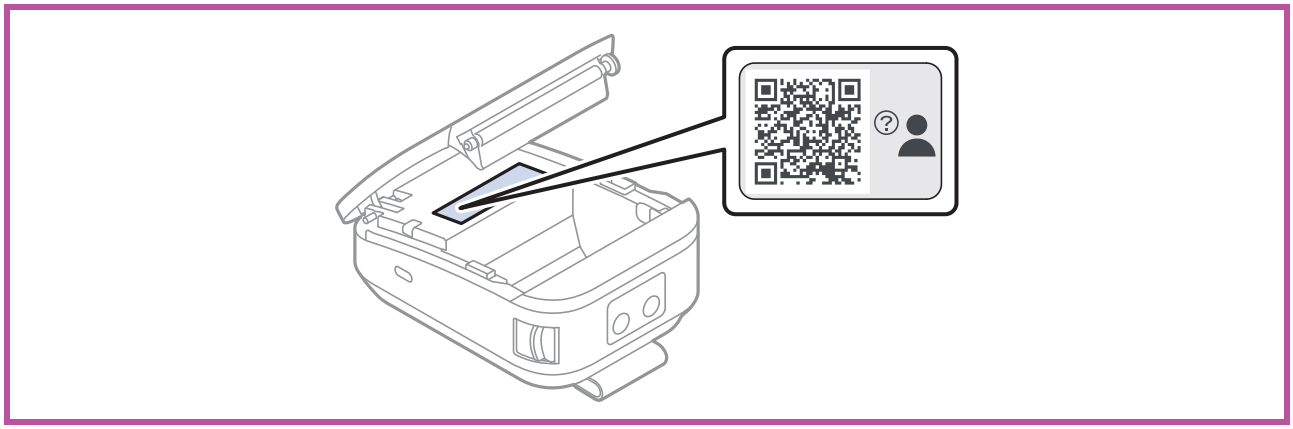

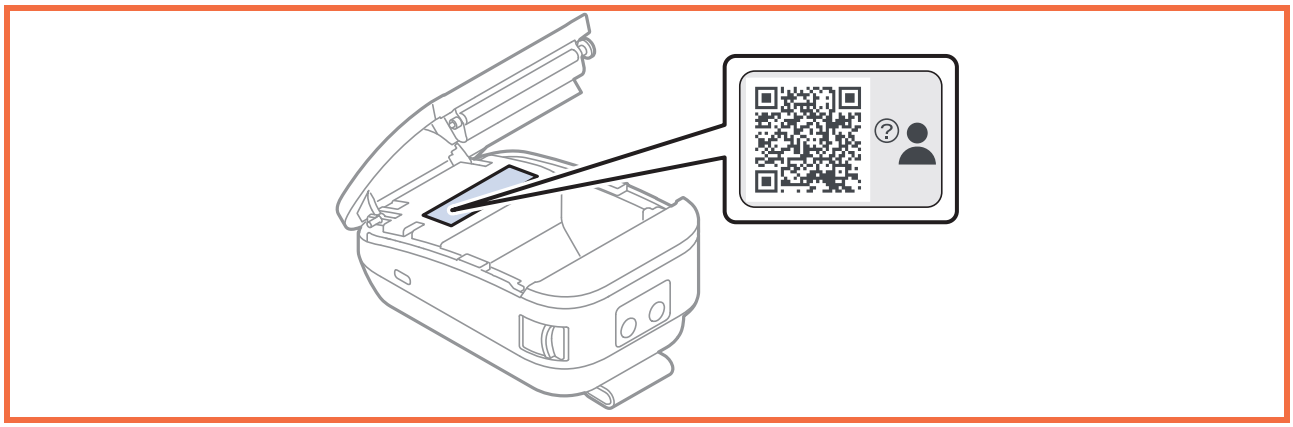

Meanings of LED Indications

The LED lights on the operation panel indicate printer status and communication status.
If an error or trouble occurs, check to see which LED light stays on or off, or is flashing.

Printer status

: Ignore the LED lights shown with this icon in the table.

~~Operation panel~~	Printer status and troubleshooting
	Normal status. The printer is ready to print. If the printer does not print, check the Wi-Fi LED or Bluetooth LED.
	The roll paper cover is open. Check whether the roll paper cover is tightly closed.
	The roll paper is not detected correctly. Check that there is enough paper left in the roll and that the roll paper is loaded correctly.
	Temperature of the thermal head is high. Due to the high temperature, the printer stopped printing. Printing starts again automatically when the thermal head temperature falls.
	The roll paper cover opened during printing. Check whether the roll paper cover is tightly closed.
	Immediately turn off the printer, wait for 10 seconds, and then turn it on again. If the Error LED turns on again even after turning the power back on, a malfunction may have occurred. Contact your qualified service personnel.

Wi-Fi ~~Connection Status~~ (Wi-Fi model)

	The printer is not connected to the Wi-Fi network.
	The printer is connected to Wi-Fi.
	The communication is temporarily unavailable such as when the IP address cannot be obtained.

Bluetooth ~~Connection Status~~ (Bluetooth model)

	The printer is not connected via Bluetooth.

	The printer is connected via Bluetooth.
	The printer is waiting to be paired with another device.

Charge LED

	The battery is charging
	Battery charge error
	Battery is fully charged or not being charged

Battery ~~Level~~

Three LEDs indicate the battery level. They turns off when no battery is installed in the printer.

Battery LED	Approximate battery level
	60 to 100%
	20 to 60%
	10 to 20%
	10% or less
	0% (printing not available)

When the Roll Paper Jams

When a paper jam occurs, never pull out the paper with too much force. Open the roll paper cover and remove the jammed paper.

Follow the procedure below to remove jammed paper.

WARNING:
Do not touch the thermal head and its surroundings. They may be hot immediately after printing.

CAUTION:
If you touch paper before printing is finished, a paper jam may occur.

CAUTION:
If you touch paper before printing is finished, a paper jam may occur.

CAUTION:
If you touch paper during printing or before cutting operation is finished, a paper jam or auto cutter error (unable to cut) may occur.

1. Turn off the printer.
2. Disconnect the USB cable, if it is connected.
3. Open the roll paper cover.
4. Remove the jammed paper.
5. Install the roll paper and close the roll paper cover.

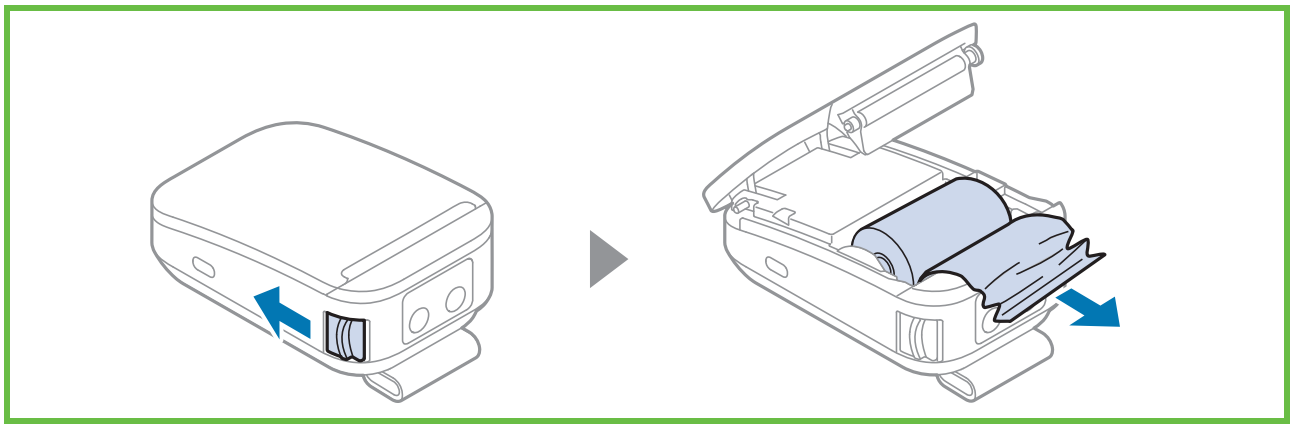

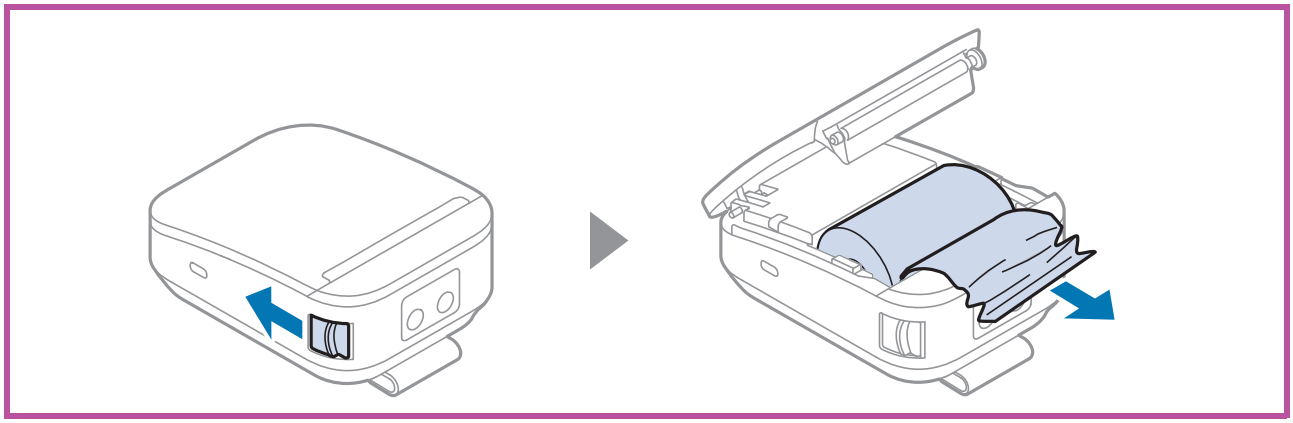

Troubleshooting

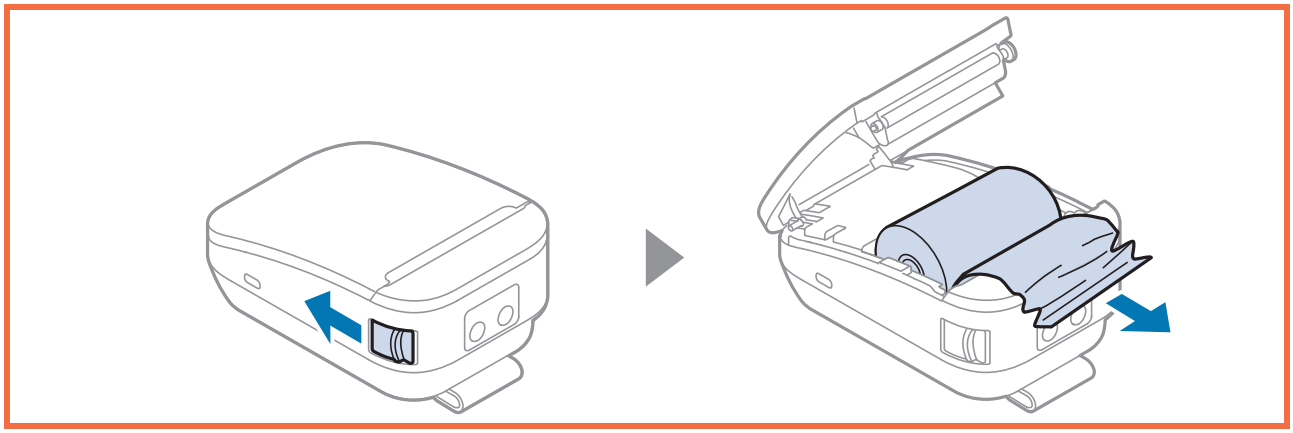

When the Roll Paper Cover does Not Open

If the roll paper cover does not open even after pulling the cover open lever, turn the printer off and then on again.

Printout is Faint

If your print out is faint or banding appears as shown below, the thermal print head may be stained badly. Clean the thermal print head and check that the problem is solved.

?Cleaning the Thermal Head? on page 39

?Cleaning the Platen Roller and Paper Detector? on page 41

Cannot Print

If there is no error but printing is still not possible, check the Wi-Fi LED or Bluetooth LED to make sure that the printer is properly connected to your computer, smart device, etc.

Run the self-test to check if printing is possible.

Follow the steps below.

1. Close the roll paper cover.
2. While pressing the Feed button, turn on the printer. (Hold down the Feed button until printing starts.)

   After printing the current print status, a continuing self-test guidance is printed, and the power LED flashes.
3. Briefly press the Feed button (less than one second) to continue the self-test.

   The printer prints using the built-in character set.

   After [***completed***] is printed, the printer is reset and switches to standard mode.

Product Specifications

Product Specifications

Printing method

Thermal line printing

Roll paper

Width	57.5 +/- 0.5 mm (2.26 +/- 0.02 inches) 79.5 +/- 0.5 mm (3.13 +/- 0.02 inches) 58 mm model: 57.5 +/- 0.5 mm (2.26 +/- 0.02 inches) 80 mm model: 79.5 +/- 0.5 mm (3.13 +/- 0.02 inches)
Diameter	40 mm (1.57 inches) maximum 51 mm (2.01 inches) maximum 51 mm (2.01 inches) maximum
Outer diameter of the roll paper core	At least 18 mm (0.71 inches)

Interface

USB-C	USB 2.0 Full-Speed (12 Mbps)
Wi-Fi model	IEEE802.11 a/b/g/n/ac (2.4 GHz or 5 GHz) compliant
Bluetooth model	Bluetooth Specification 5.0 (Classic/BLE compliant)

Power supply

Battery	OT-BY20II OT-BY80II OT-BY80II (Included and also available as an option)

USB charging

Be sure to use a safety standard certified product that meets the following specifications.

Rated output	5 V / 8.0 A or less
Maximum output	Up to 40 VA

Charging time

USB Type- C	At ordinary temperatures	At low temperatures
5V / 3A	Approx. 3 hours (TBD) Approx. 2.5 hours (TBD) Approx. 2.5 hours (TBD)	Approx. 6 hours (TBD) Approx. 5 hours (TBD) Approx. 5 hours (TBD)
5V / 1.5A	Approx. 4 hours (TBD) Approx. 3 hours (TBD) Approx. 3 hours (TBD)	Approx. 8 hours (TBD) Approx. 6 hours (TBD) Approx. 6 hours (TBD)
5V/ 900 mA, 500 mA	Approx. 7 hours (TBD) Approx. 14 hours (TBD) Approx. 14 hours (TBD)	Approx. 14 hours (TBD) Approx. 28 hours (TBD) Approx. 28 hours (TBD)

Charging time is the measured time from approximately 0% remaining charge to fully charged under the following conditions.

- ❏ The battery is new.
- ❏ The printer is powered off.
- ❏ Normal temperatures are defined as approximately 10 to 30°C and low temperatures as approximately 0 to 10°C.

Continuous operating time

Wi-Fi model	Approx. 16 hours (TBD) Approx. 25 hours (TBD) Approx. 25 hours (TBD)
Bluetooth model	Approx. 26 hours (TBD) Approx. 46 hours (TBD) Approx. 33 hours (TBD)

TBD

Measured under our operating conditions when the battery is fully charged. The values vary depending on usage conditions and the operating environment.

Temperature/Humidity

Operating	Temperature: -15 to 50˚C (5 to 122˚F) (Print quality can be guaranteed at 5 to 45 °C (41 to 113˚F)) Humidity: 10 to 90% RH, no condensation
When charging via USB	Temperature: 0 to 40˚C (32 to 104˚F) (Print quality is not guaranteed) Humidity: 10 to 90% RH, no condensation
Storage	When the printer was stored under the following conditions, leave it at 25°C, 60% RH for 2 hours and then check the operation. Hot and humid: 120 hours at 50˚C (122˚F), 90% RH High temperature: 120 hours at 70˚C (158˚F) Low temperature: 120 hours at -25˚C (-13˚F)

Altitude

3,000 m or less

Overall dimensions (W x D x H)

Approx. 79.0 x 120 x 46.0 mm (3.11 x 4.72 x 1.81 inches) (TBD)

Approx. 105 x 138 x 57.6 mm (4.13 x 5.43 x 2.27 inches) (TBD)

Approx. 105 x 153.4 x 66.9 mm (4.13 x 6.04 x 2.63 inches) (TBD)

Dimensions with belt clip removed.

Weight

Wi-Fi model: Approx. 217 g

Wi-Fi model: Approx. 377 g

Wi-Fi model: Approx. 516 g

Bluetooth model: Approx. 210 g

Bluetooth model: Approx. 370 g

Bluetooth model: Approx. 509 g

Both are the weight excluding the belt clip and paper.

Consumables and Options

Product	Model Name
Battery	OT-BY20 OT-BY80II OT-BY80II
Single battery charger	OT-SB20II OT-SB80II OT-SB80II
Quadruplet battery charger	OT-CH20II OT-CH80II OT-CH80II
Soft case	OT-PC20II OT-PC80II OT-PC80IIAC
Belt strap	OT-BE01
Shoulder strap	OT-SH01

Appendix

Restriction of Use

When this product is used for applications requiring high reliability/safety, such as transportation devices related to aviation, rail, marine, automotive, etc.; disaster prevention devices; various safety devices, etc.; or functional/precision devices, etc.; you should use this product only after giving consideration to including fail-safes and redundancies into your design to maintain safety and total system reliability. Because this product was not intended for use in applications requiring extremely high reliability/safety, such as aerospace equipment, main communication equipment, nuclear power control equipment, or medical equipment related to direct medical care, etc., please make your own judgment on this product‘s suitability after a full evaluation.

CAUTIONS

No part of this publication may be reproduced, stored in a retrieval system, or transmitted in any form or by any means, electronic, mechanical, photocopying, recording, or otherwise, without the prior written permission of Seiko Epson Corporation.

The contents of this manual are subject to change without notice.

While every precaution has been taken in the preparation of this manual, Seiko Epson Corporation assumes no responsibility for errors or omissions.

Neither is any liability assumed for damages resulting from the use of the information contained herein.

Neither Seiko Epson Corporation nor its affiliates shall be liable to the purchaser of this product or third parties for damages, losses, costs, or expenses incurred by purchaser or third parties as a result of: accident, misuse, or abuse of this product or unauthorized modifications, repairs, or alterations to this product, or (excluding the U.S.) failure to strictly comply with Seiko Epson Corporation‘s operating and maintenance instructions.

Seiko Epson Corporation shall not be liable against any damages or problems arising from the use of any options or any consumable products other than those designated as Original Epson Products or Epson Approved Products by Seiko Epson Corporation.

Trademarks

EPSON is a registered trademark of Seiko Epson Corporation. Exceed Your Vision is a registered trademark or trademark of Seiko Epson Corporation.

Wi-Fi® is a registered trademark of Wi-Fi Alliance®.

The Bluetooth® word mark and logos are registered trademarks owned by Bluetooth SIG, Inc. and any use of such marks by Seiko Epson Corporation is under license.

IOS is a trademark or registered trademark of Cisco in the U.S. and other countries and is used under license.

Android™ is a trademark of Google LLC.

Appendix

Apple, Apple TV, Apple Watch, iPad, iPad Air, iPad Pro, iPhone, and Lightning are trademarks of Apple Inc., registered in the U.S. and other countries. tvOS is a trademark of Apple Inc. The trademark "iPhone" is used in Japan with a license from Aiphone K.K.

All other trademarks are the property of their respective owners and used for identification purpose only.

INDEX.HTML

MI

1
2
3

MI01

1 MENU01 : ?Before Using the Printer? on page 3
2
3

MI02

1 MENU02 : ?Part Names? on page 8
2
3

MI03

1 MENU03 : ?Basic Operations? on page 11
2
3

MI04

1 MENU04 : ?Setup? on page 35
2
3

MI05

1
2
3

MENU05 : ?Cleaning? on page 38

MI06

1
2
3

MENU06 : ?Troubleshooting? on page 43

MI07

1
2
3

MENU07 : ?Product Specifications? on page 51

MI08

1
2
3

MENU08 : ?Appendix? on page 55

MENU01

1
2
3

MENU02

1
2
3

MENU03

1
2
3

MENU04

1
2
3

MENU05

1
2
3

MENU06

1
2
3

MENU07

1
2
3

MENU08

1
2
3

H_DEF.FM

Conv Info.

1 TM-P20II

TM-P80II

TM-P80IIAC

2 M00148600

M00148700

M00148800

3 EN

4 STD

5 STD

6 NA