FCC Application for Printer

MODEL : P130A

FCC ID : BKMFBP130A

INDEX

1. Product Description
2. FCC ID Label
3. Photograph
4. Block Diagram
5. Test Report
6. User's Manual

Product Description

The SEIKO EPSON Corporation Model P130A(referred to as the EUT in this report) is a black 64-nozzles and color 64×5-nozzles ink jet printer that mounts the CENTRONICS parallel and RS-422 serial interface ports as standard.

The options of the EUT are follows.

interface cards

Automatic Media Take Up Unit EU-39

The printing speed is 200 CPS (characters per second) at 10 CPI (characters per inch). The available paper size is A3 to B0+.

The main CPU is a HD6437043AF33, 33.00 MHz processor.

The power rating of the EUT is AC 120 V,50-60 Hz, 1.0 A.

FCC ID LABEL

REAR View

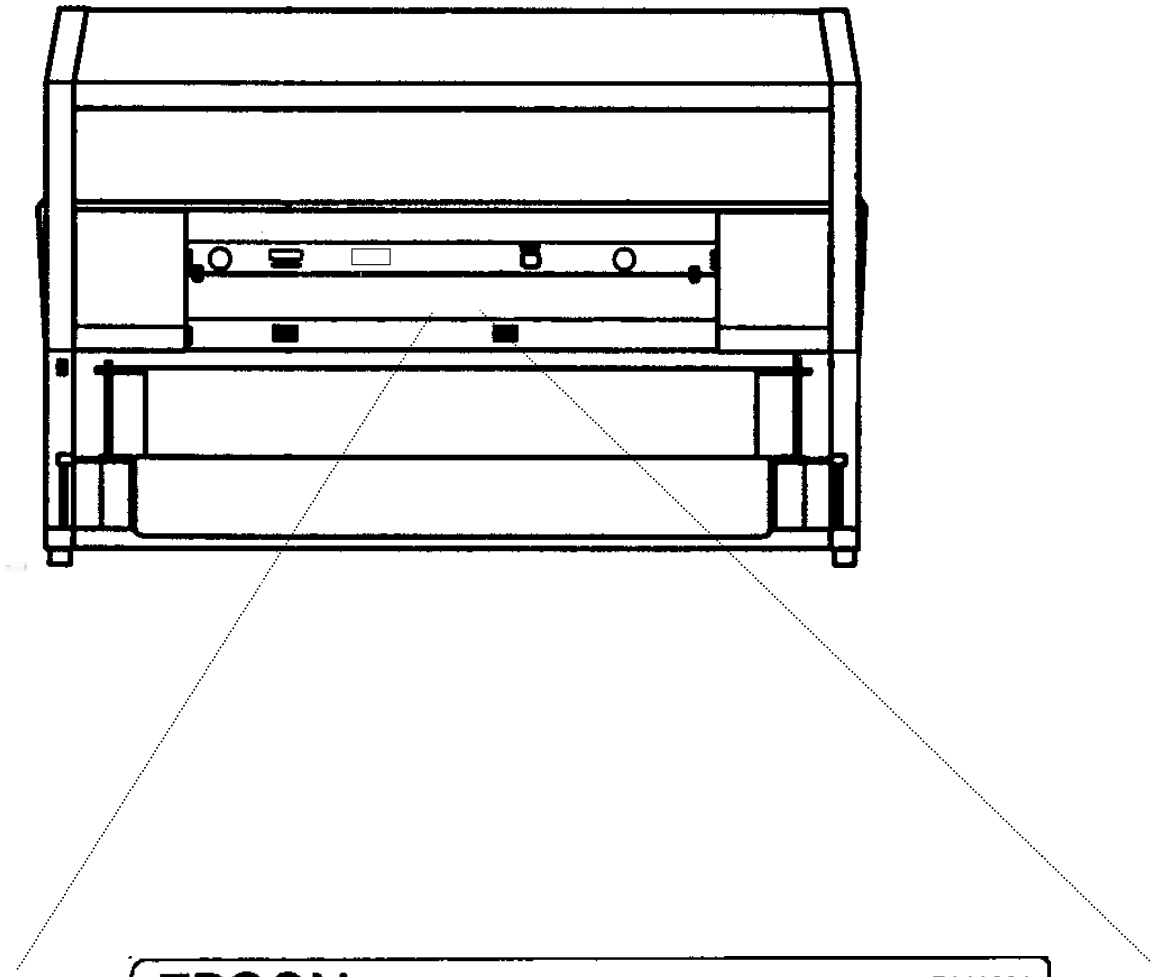

EPSON Stylus PHOTO 9000 E141861

MODEL P130A 120V～ 50-60Hz 1.0A

SERIAL NO. 000125

FCC ID:BKMFBP130A

This device complies with Part 15 of the FCC Rules. Operation is subject to the following two conditions: (1) this device may not cause harmful interference, and (2) this device must accept any interference received, including interference that may cause undesired operation.

• This Class B digital apparatus meets all requirements of the Canadian Interference-Causing Equipment Regulations.
• Cet appareil numerique de la classe B respecte toutes les exigences du Reglement sur le materiel brouilleur du Canada.

SEIKO EPSON CORP. MADE IN JAPAN PAT.P.

Photograph

1)Front view
2)Front view with option C82363 and EU-39
3)Rear view
4)Rear view with option C82363 and EU-39
5)Front view without some covers
6)Inside view (MAIN Board and Power Supply Board area)
7)Inside view (Right Side)
8)Inside view (Left Side)
9)Inside view (Carriage area)
10)Inside view (Blower area)
11)Inside view (Head area)
12)Inside view (Ink Board area)
13)Main Board (Surface)
14)Main Board (Reverse)
15)Terminal Board (Surface)
16)Terminal Board (Reverse)
17)Carriage Board (Surface)
18)Carriage Board (Reverse)
19)Ink Board (Surface)
20)Ink Board (Reverse)
21)Head Unit
22)Head Driver Board (Surface)
23)Head Driver Board (Reverse)
24)Power Supply Board (Surface)
25)Power Supply Board (Reverse)
26)Operation panel
27)Operation panel Board (Surface)
28)Operation panel Board (Reverse)
29)Option Automatic Media Take Up Unit (EU-39)
30)Option Automatic Media Take Up Unit, Inside view
31)Option Automatic Media Take Up Unit, Main Board (Surface)
32)Option Automatic Media Take Up Unit, Main Board (Reverse)
33)Option Automatic Media Take Up Unit, Power Supply Board (Surface)
34)Option Automatic Media Take Up Unit, Power Supply Board (Reverse)
35)Option Interface Card (C82363)

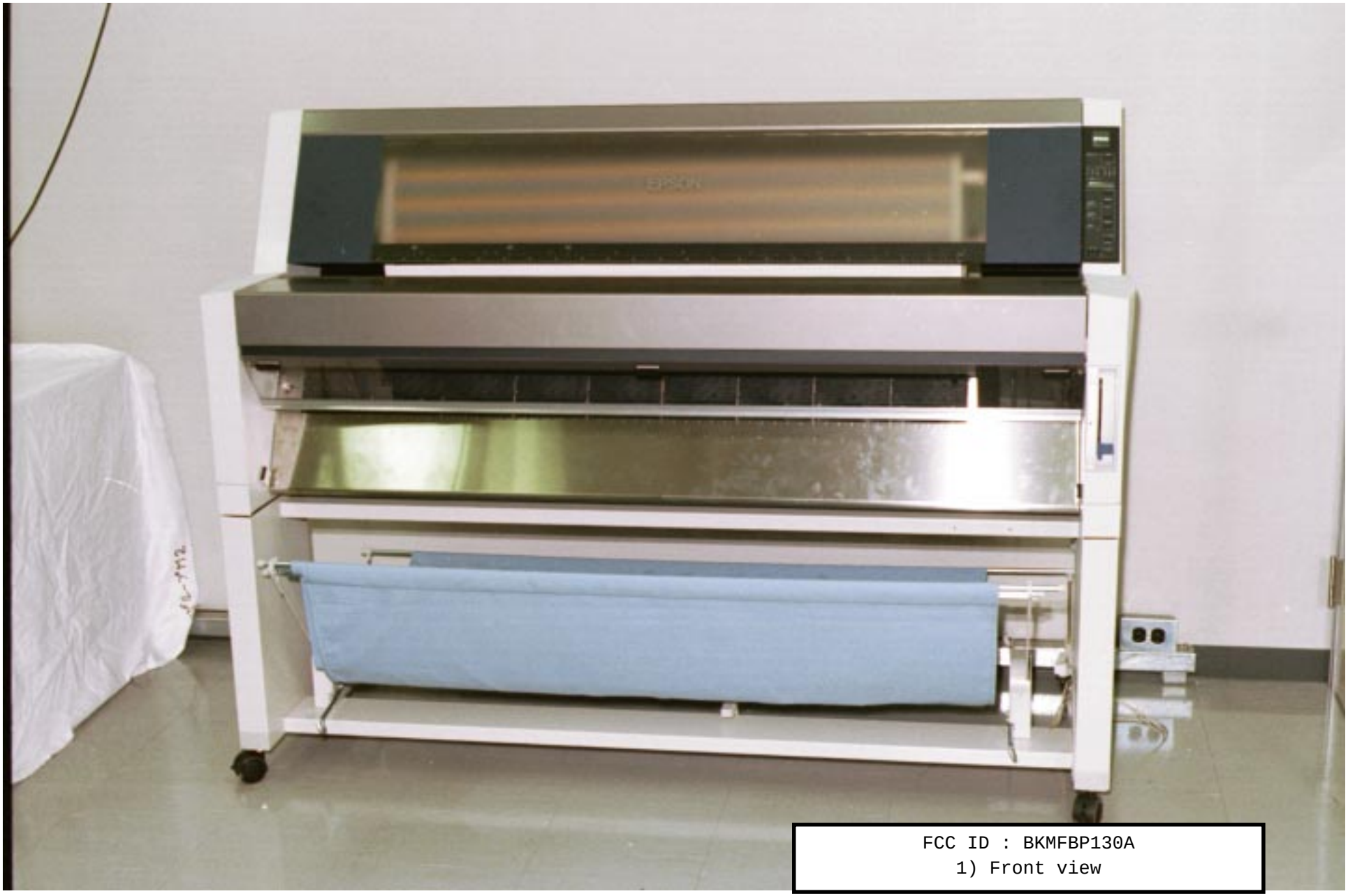

FCC ID : BKMFBP130A
1) Front view

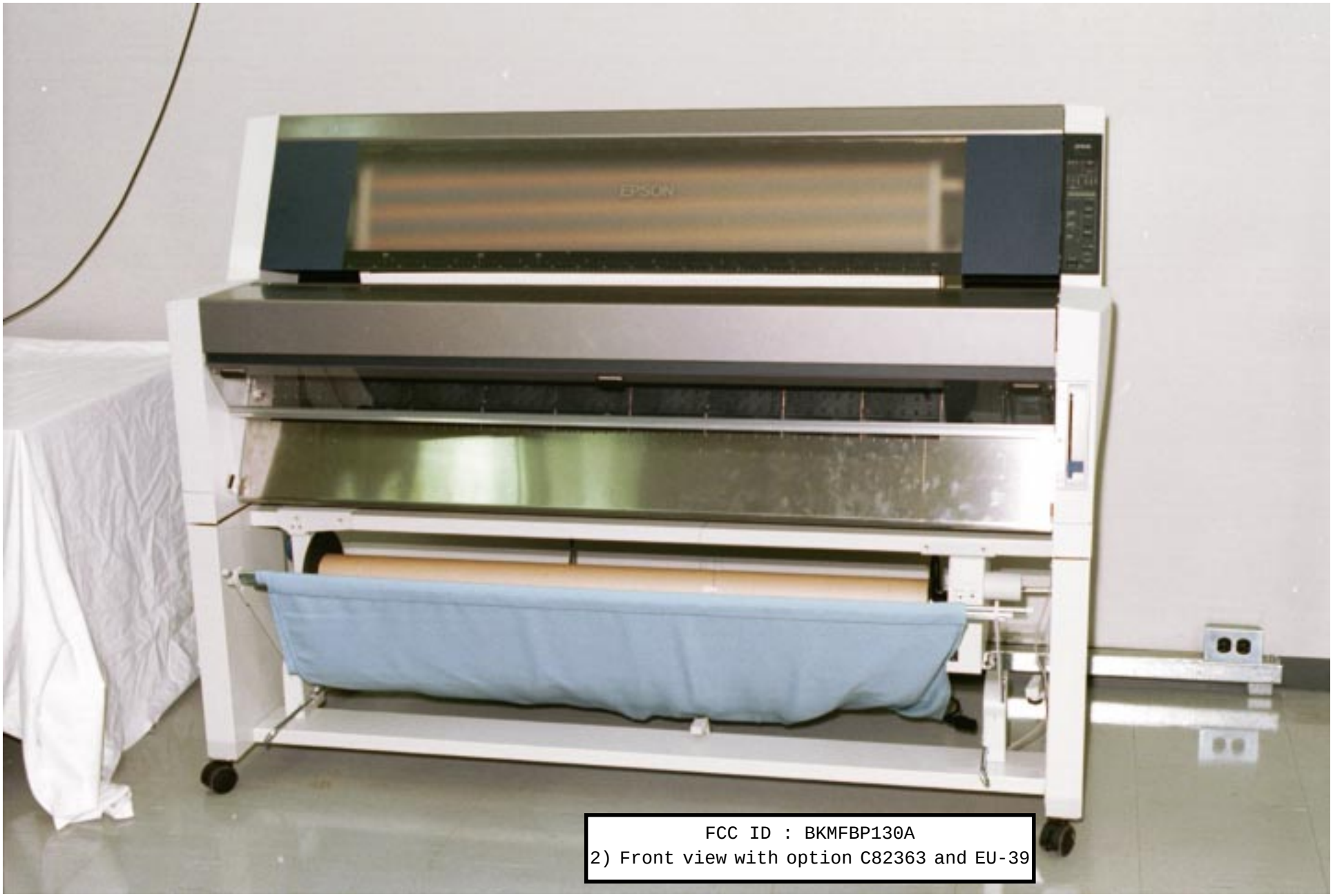

FCC ID : BKMFBP130A
2) Front view with option C82363 and EU-39

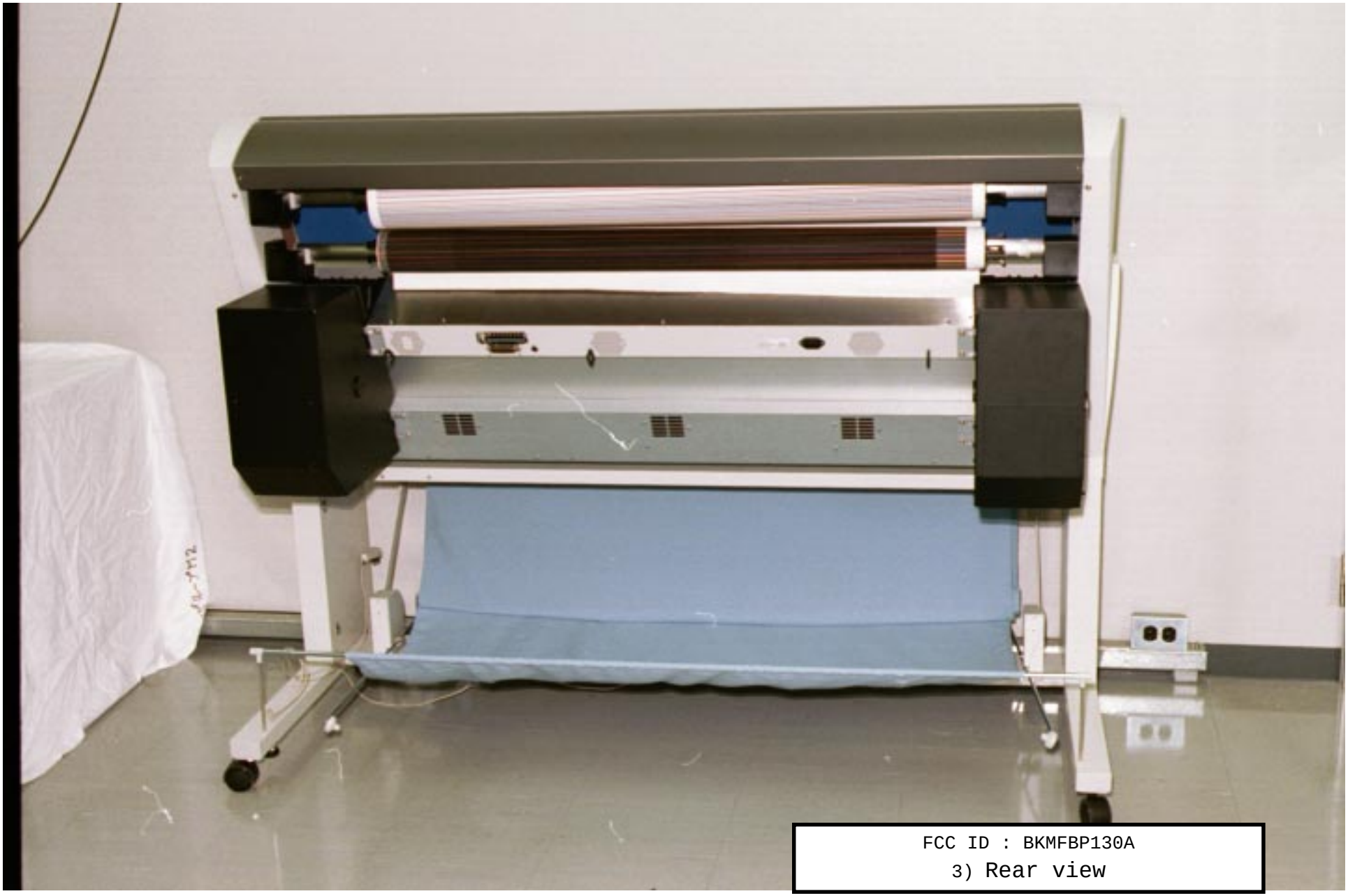

FCC ID : BKMFBP130A

3) Rear view

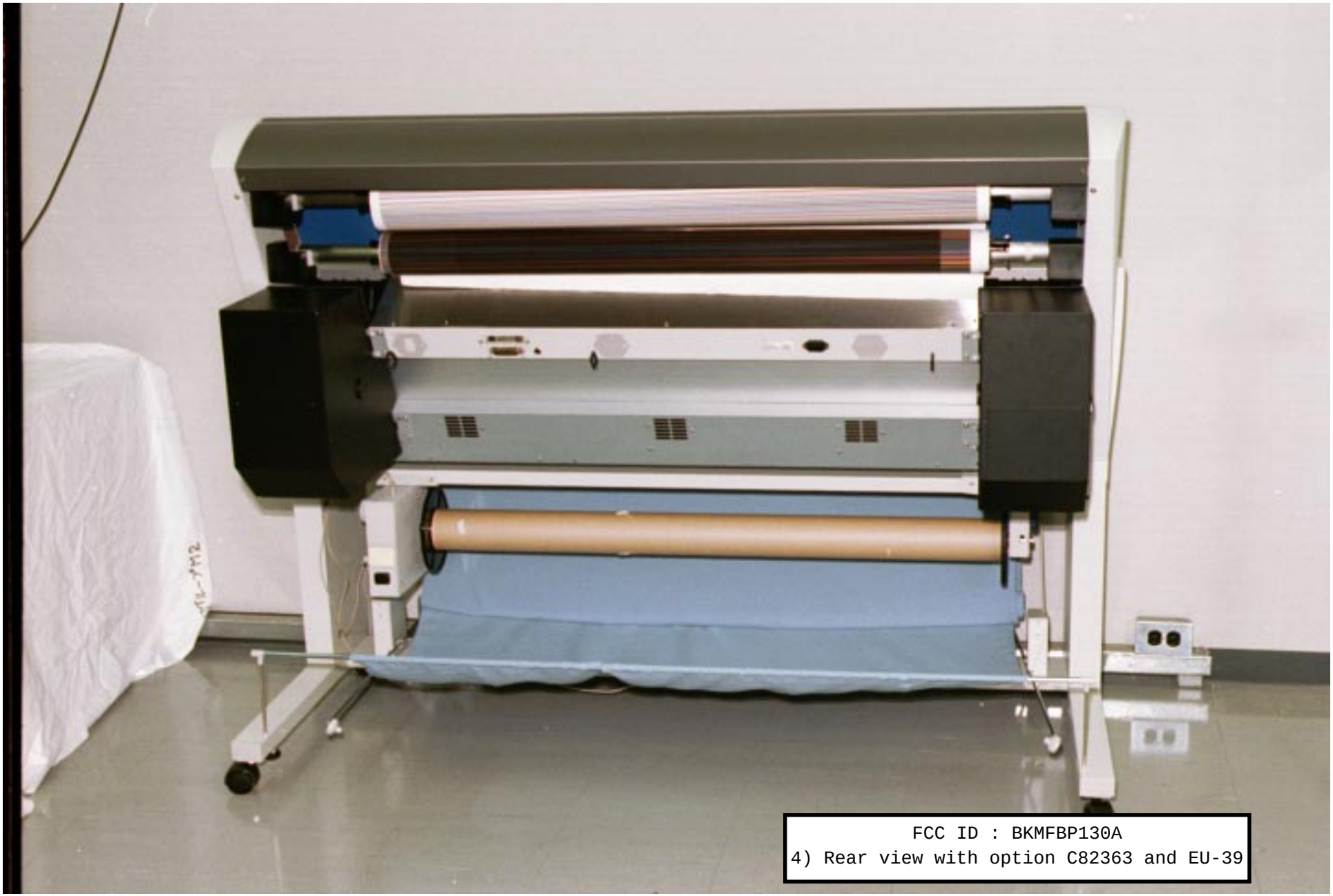

FCC ID : BKMFBP130A
4) Rear view with option C82363 and EU-39

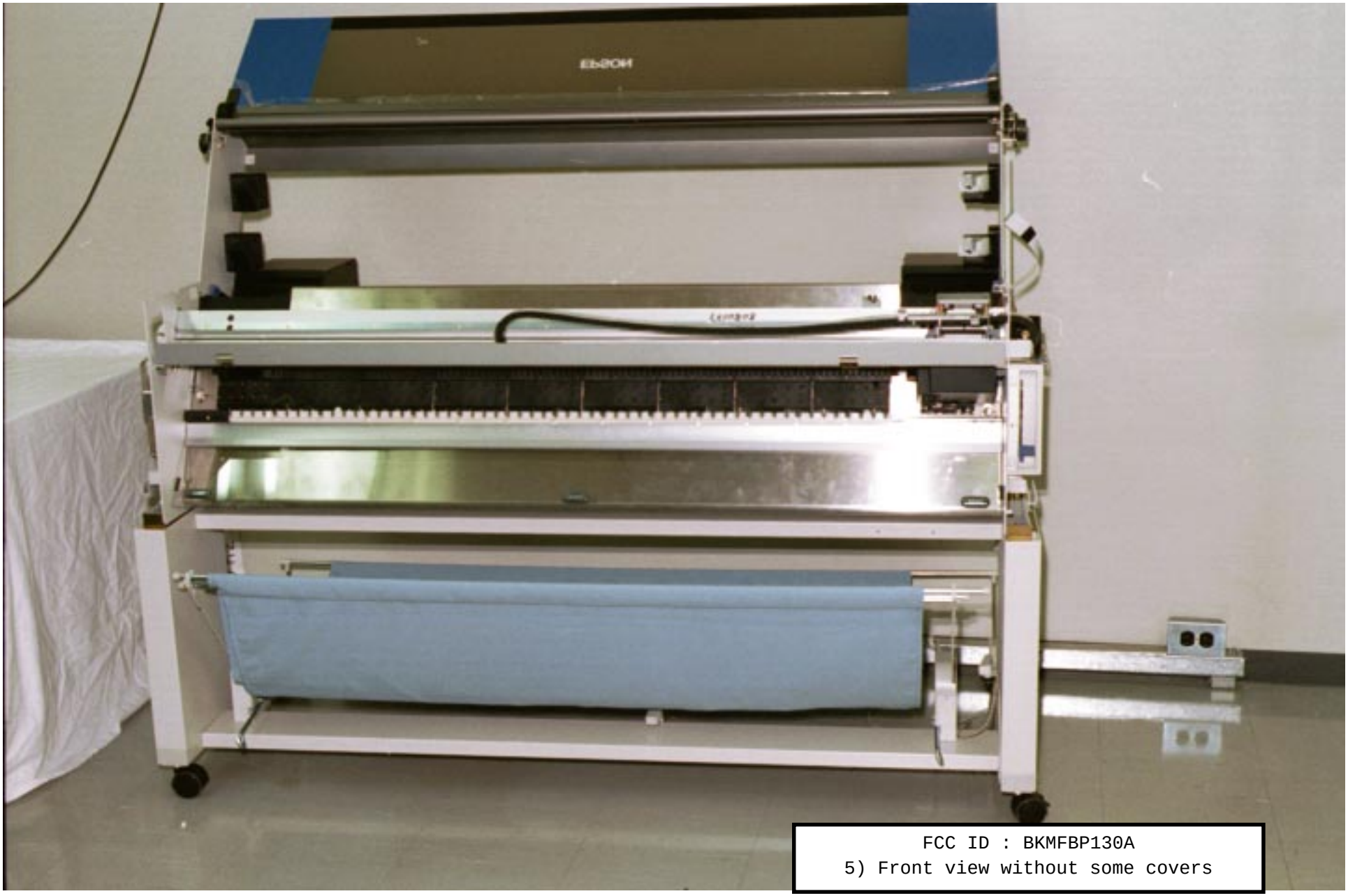

FCC ID : BKMFBP130A
5) Front view without some covers

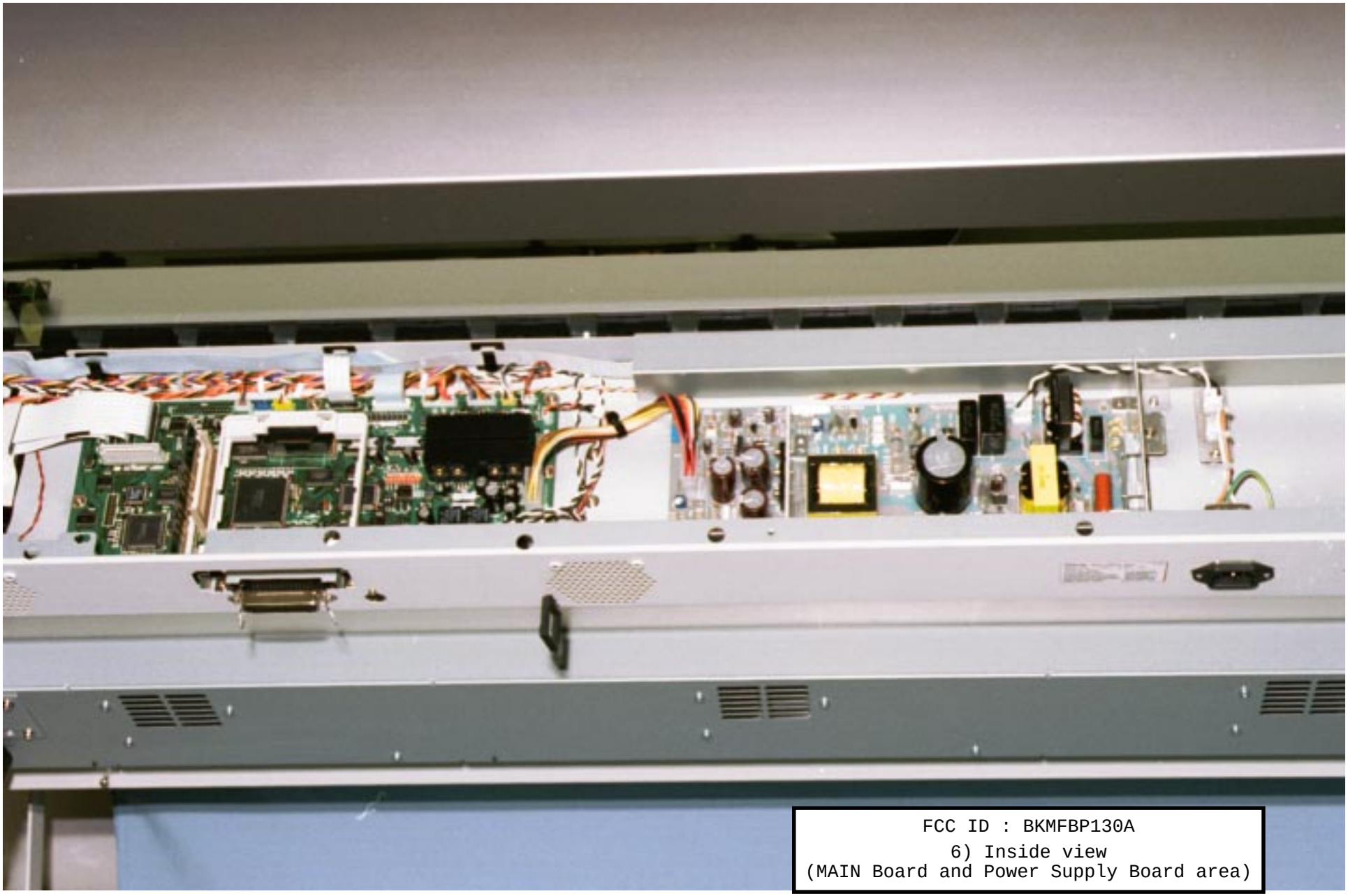

FCC ID : BKMFBP130A

6) Inside view
(MAIN Board and Power Supply Board area)

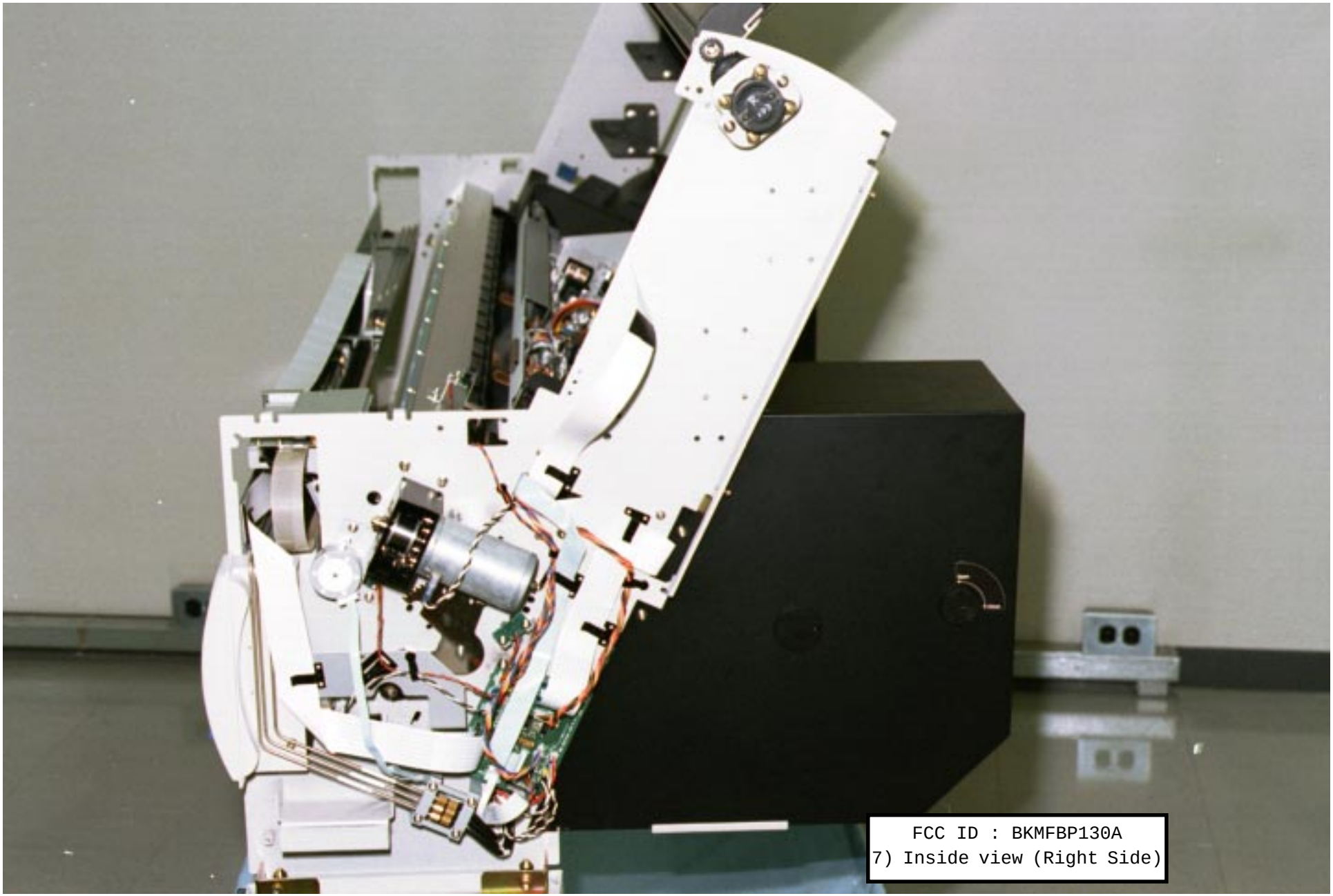

FCC ID : BKMFBP130A
7) Inside view (Right Side)

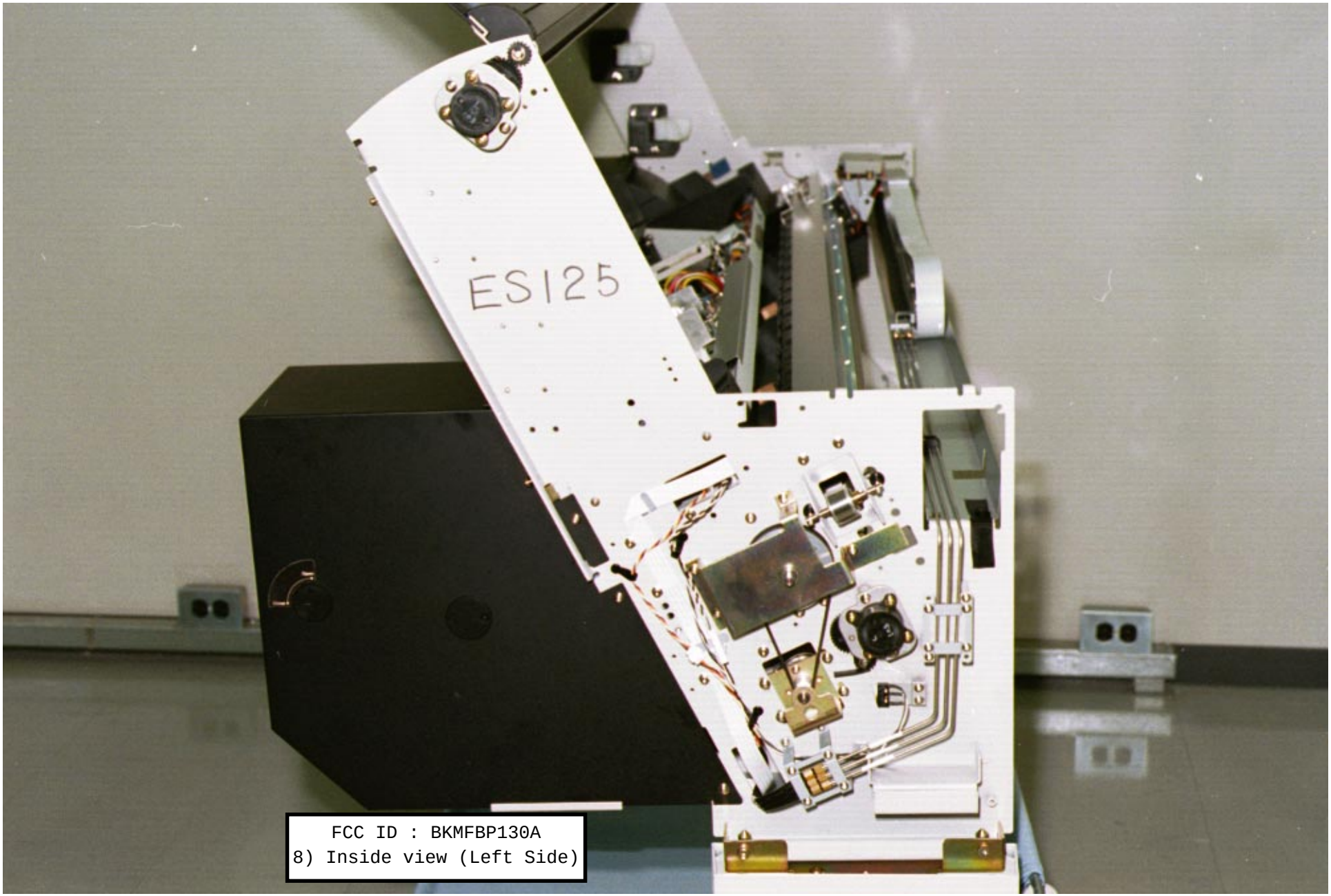

FCC ID : BKMFBP130A
8) Inside view (Left Side)

FCC ID : BKMFBP130A
9) Inside view (Carriage area)

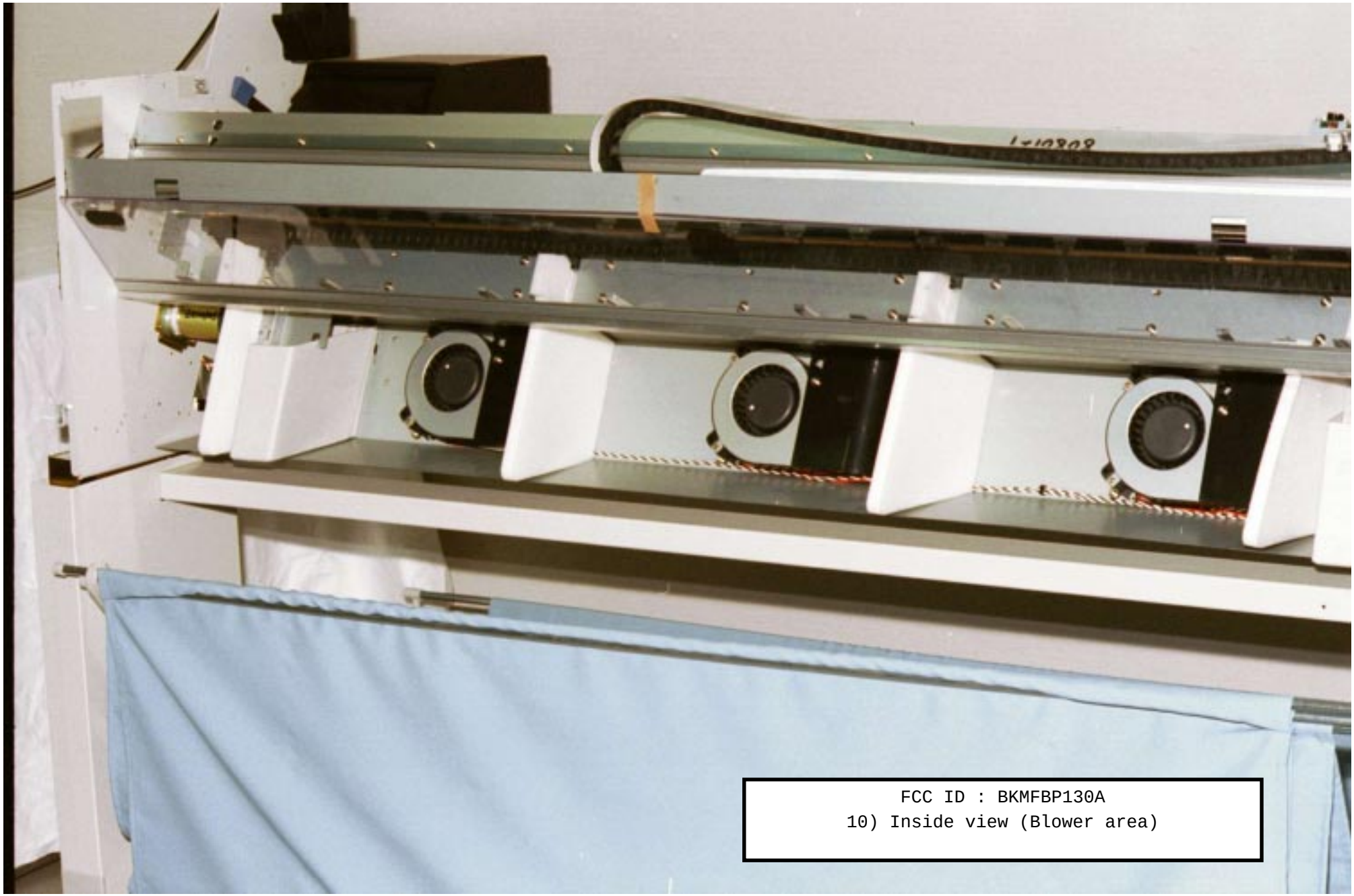

FCC ID : BKMFBP130A
10) Inside view (Blower area)

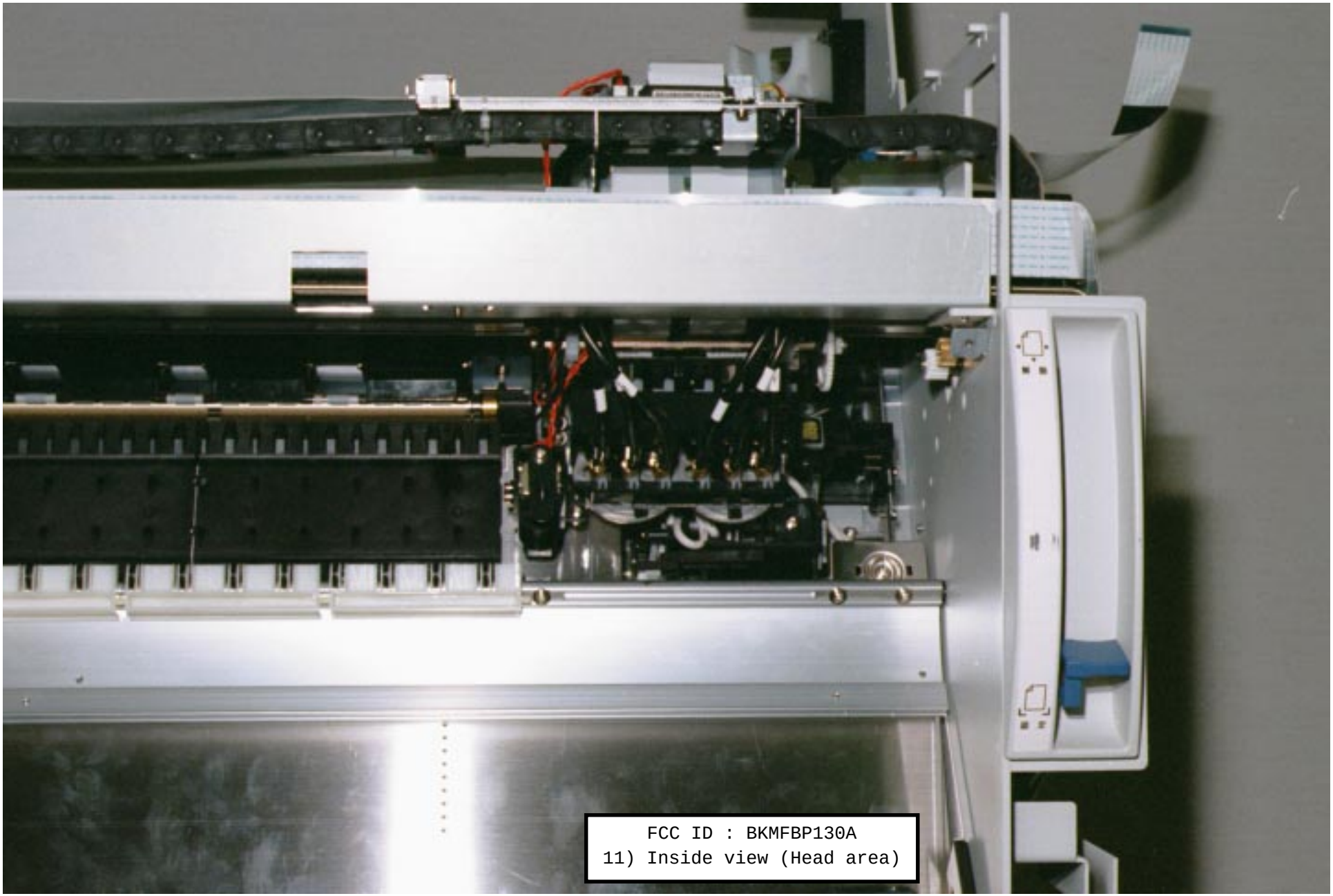

FCC ID : BKMFBP130A
11) Inside view (Head area)

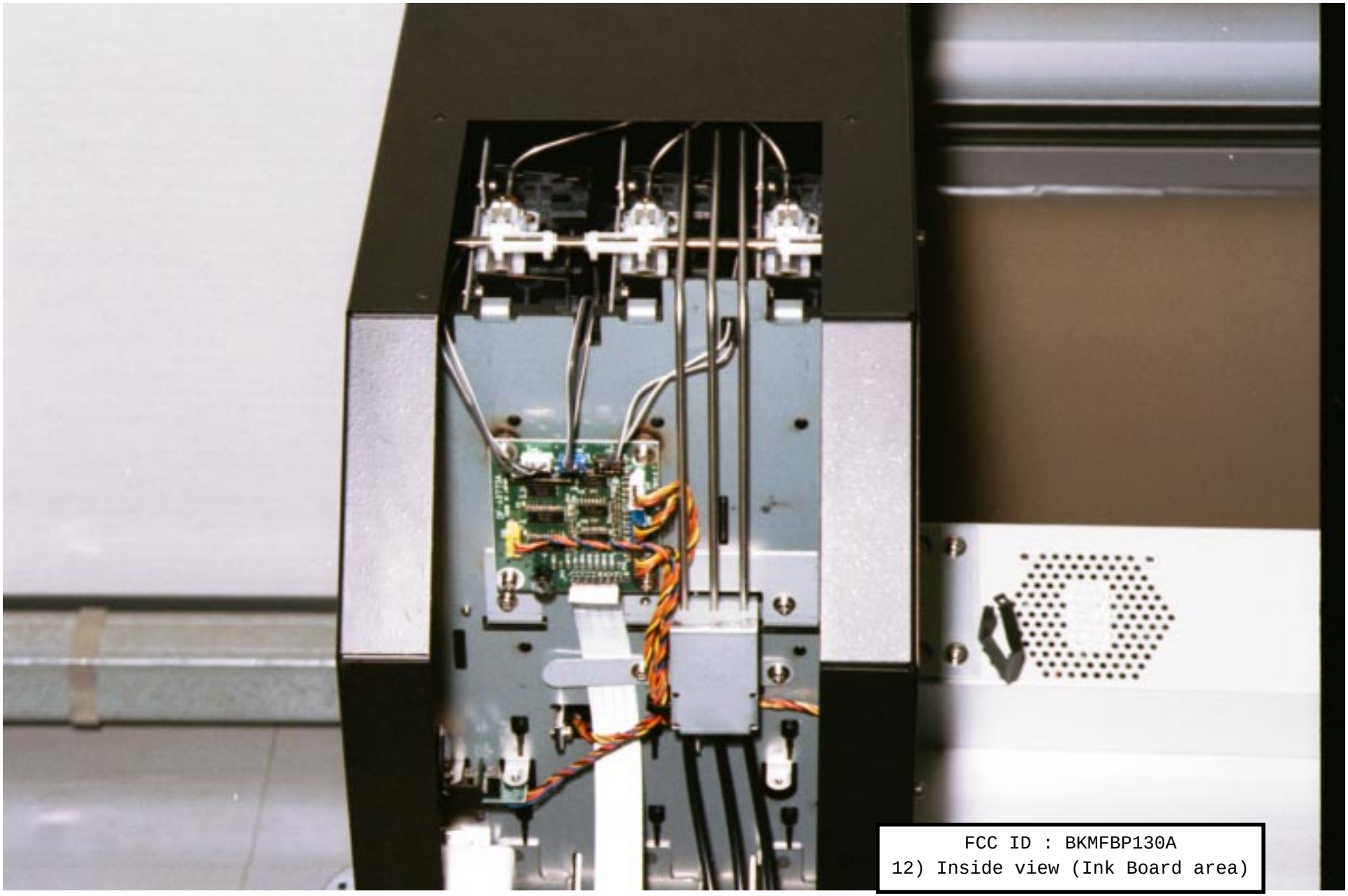

FCC ID : BKMFBP130A
12) Inside view (Ink Board area)

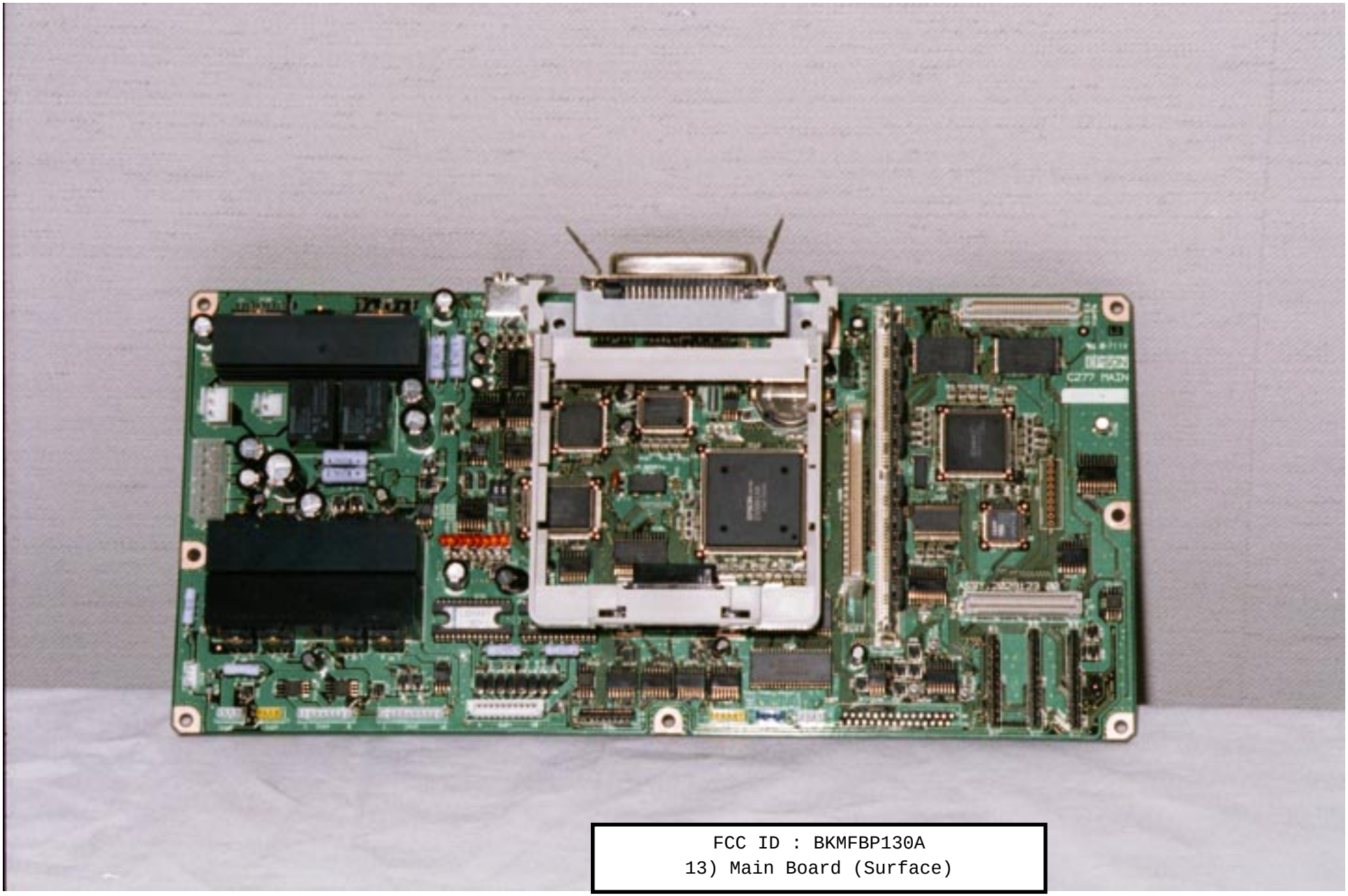

FCC ID : BKMFBP130A
13) Main Board (Surface)

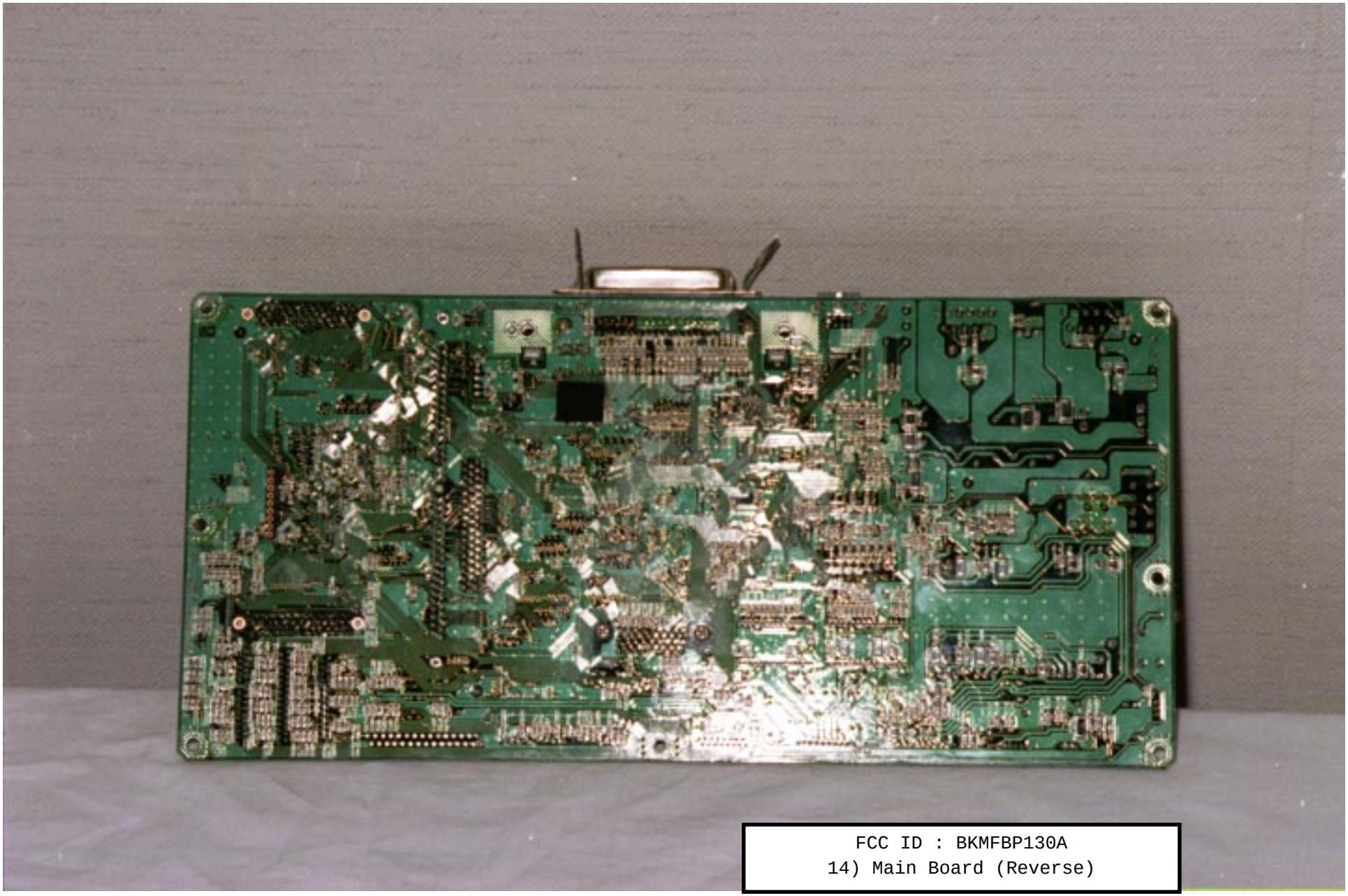

FCC ID : BKMFBP130A
14) Main Board (Reverse)

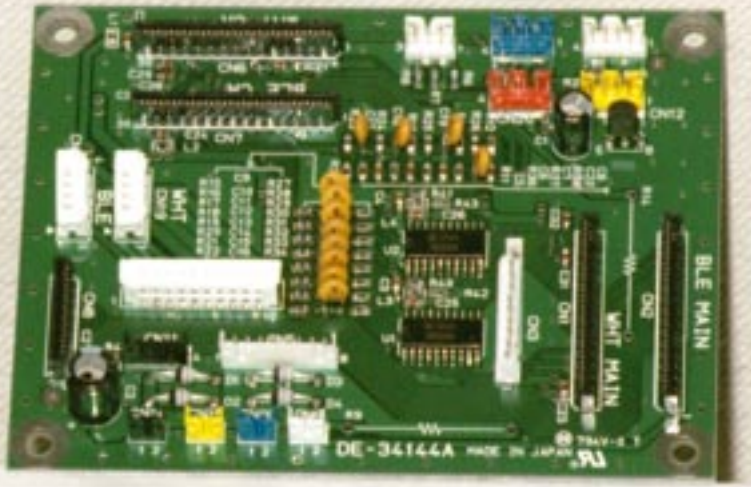

FCC ID : BKMFBP130A
15) Terminal Board (Surface)

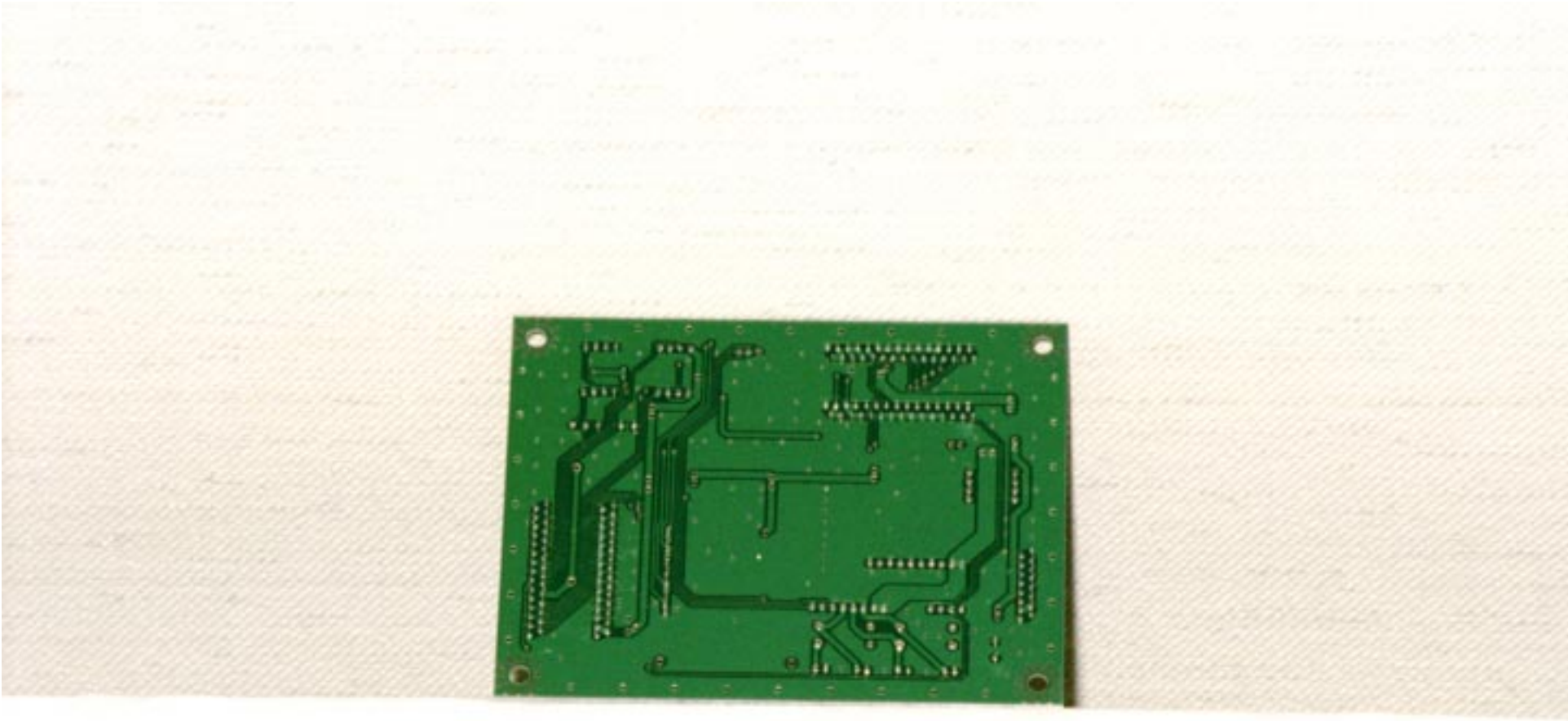

FCC ID : BKMFBP130A
16) Terminal Board (Reverse)

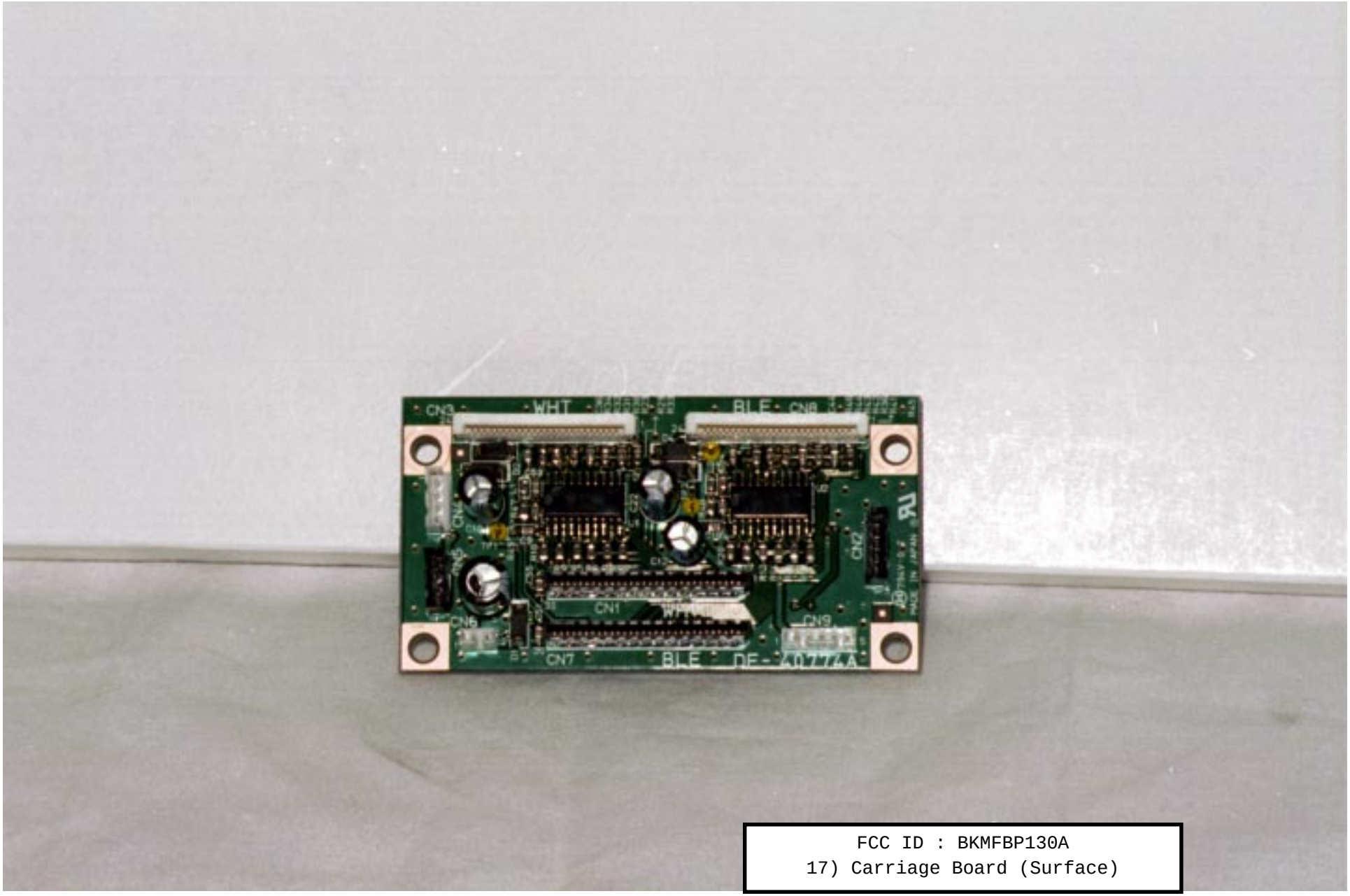

FCC ID : BKMFBP130A
17) Carriage Board (Surface)

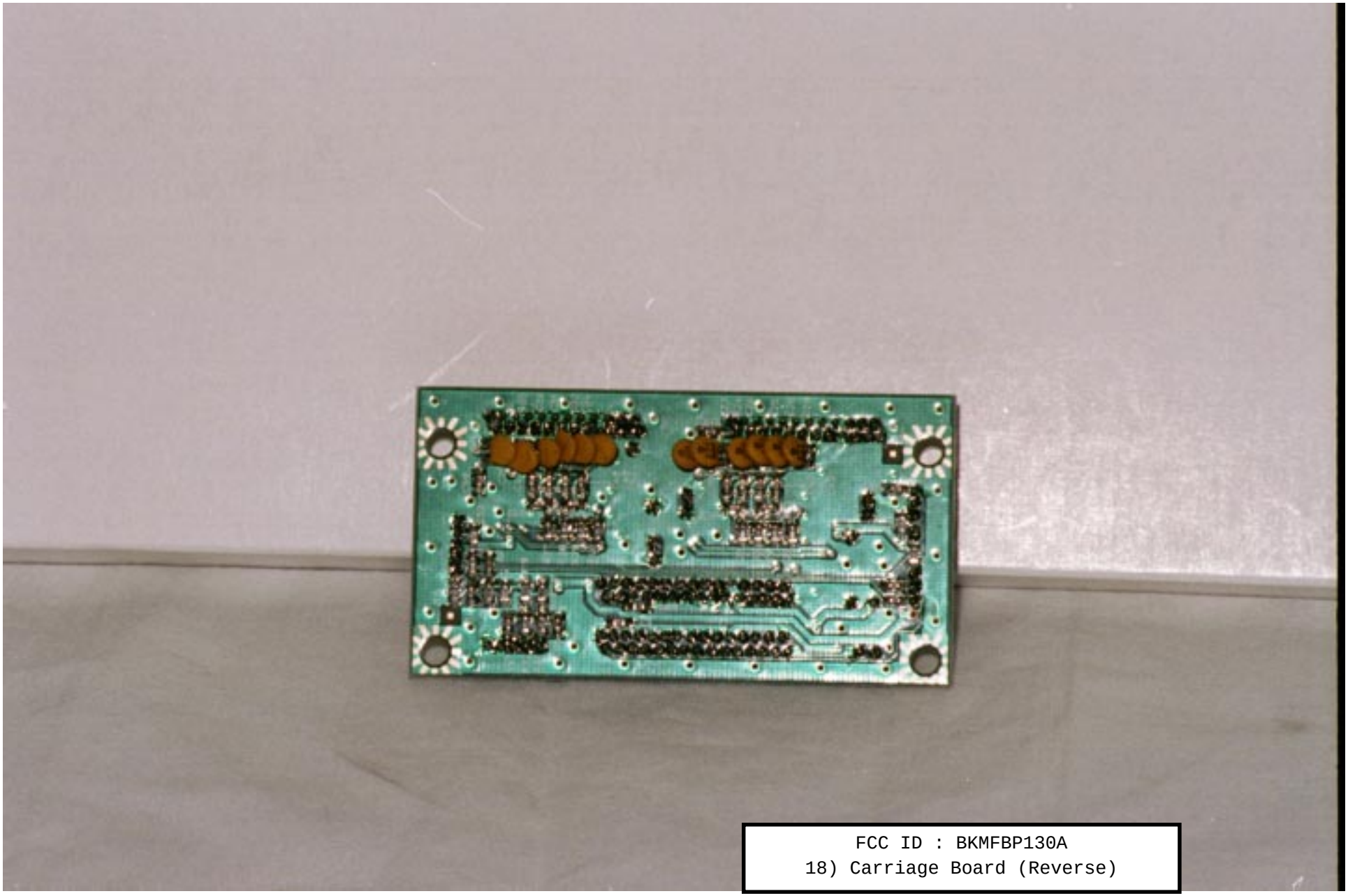

FCC ID : BKMFBP130A
18) Carriage Board (Reverse)

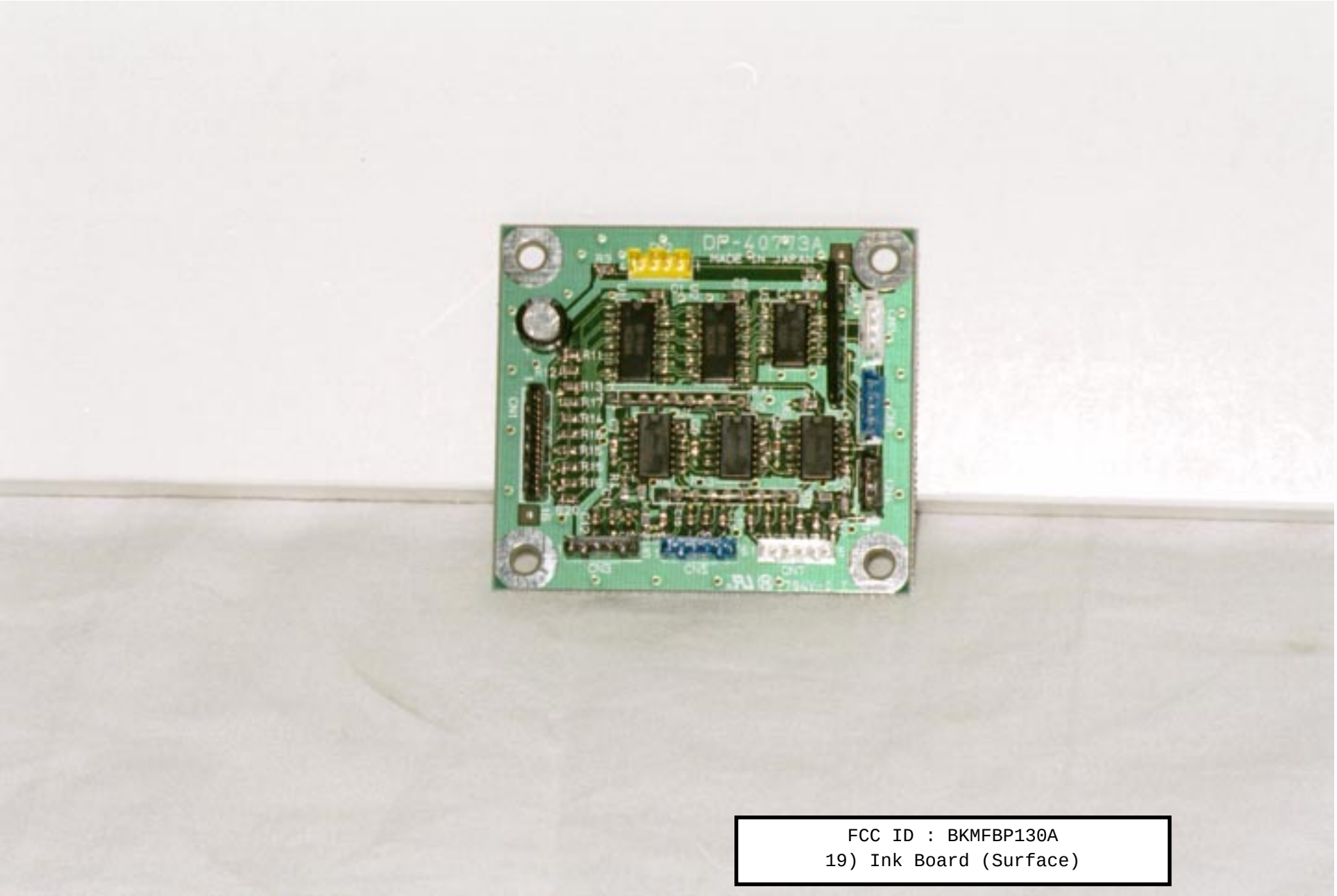

FCC ID : BKMFBP130A
19) Ink Board (Surface)

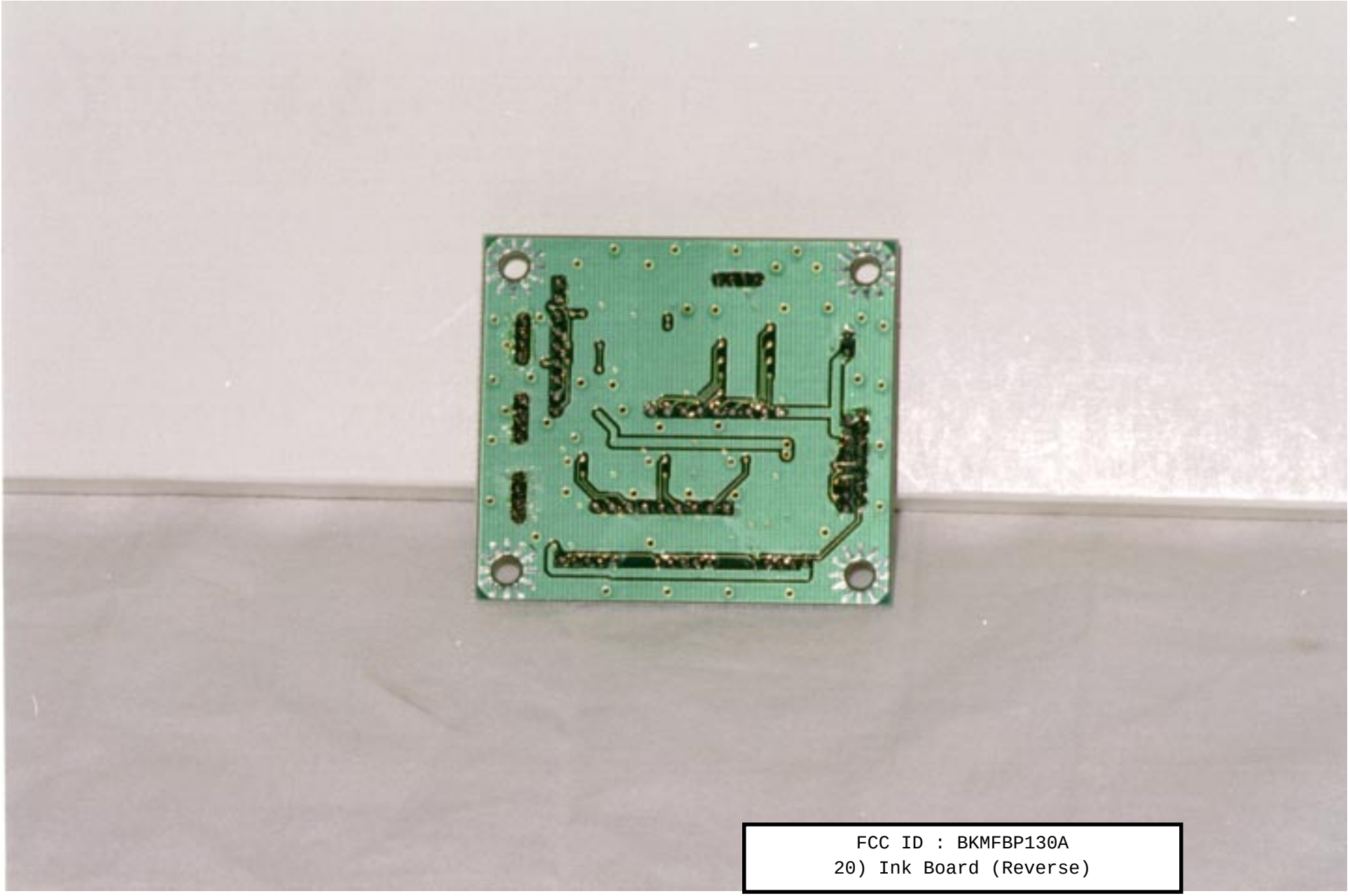

FCC ID : BKMFBP130A
20) Ink Board (Reverse)

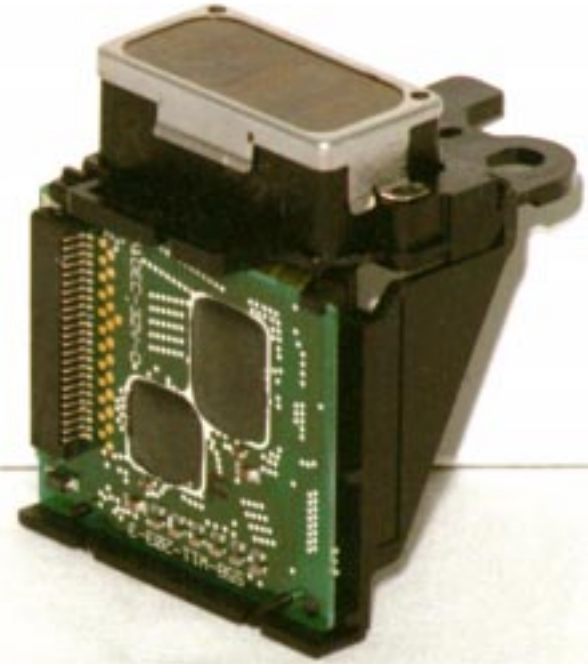

FCC ID : BKMFBP130A
21) Head Unit

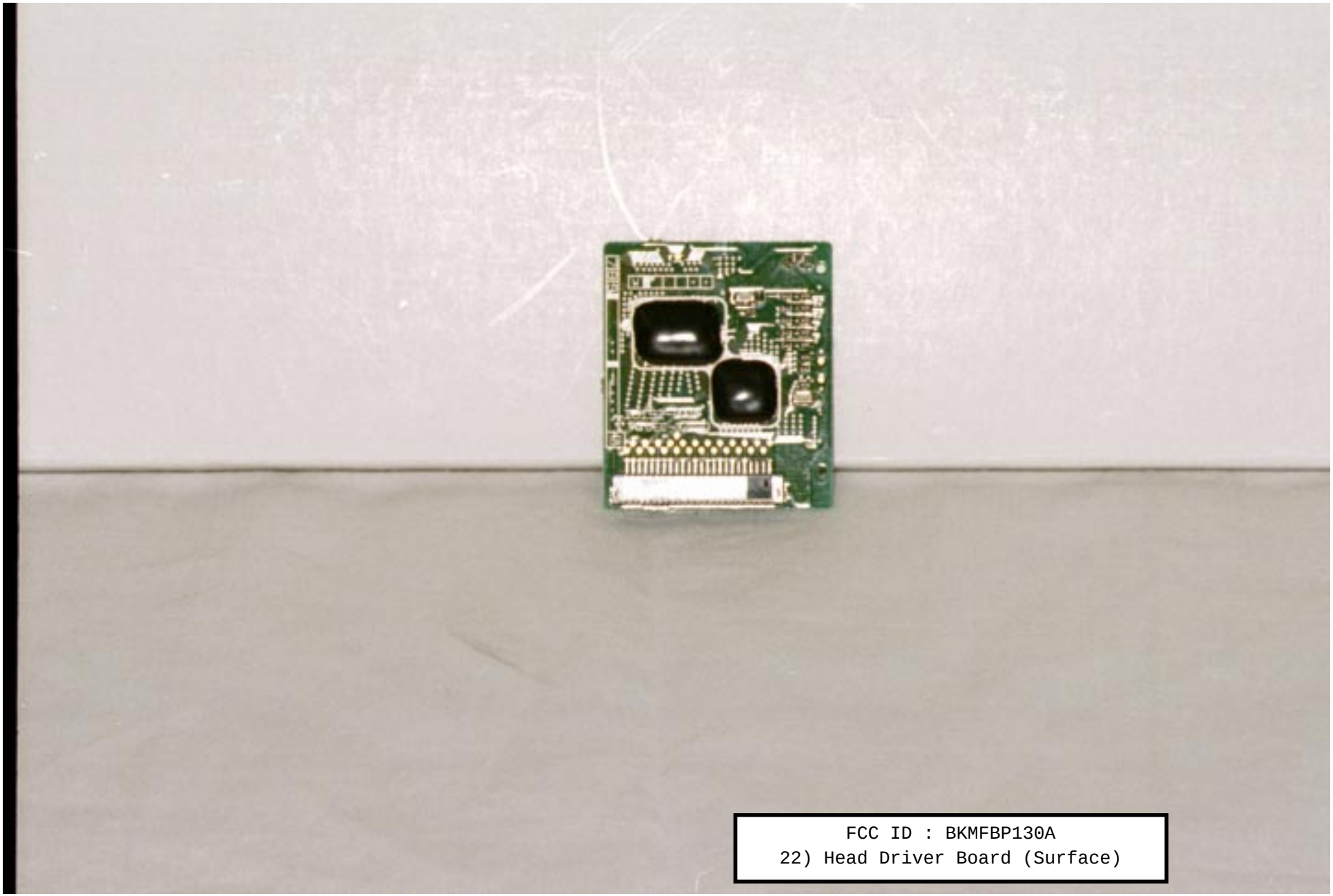

FCC ID : BKMFBP130A
22) Head Driver Board (Surface)

FCC ID : BKMFBP130A
23) Head Driver Board (Reverse)

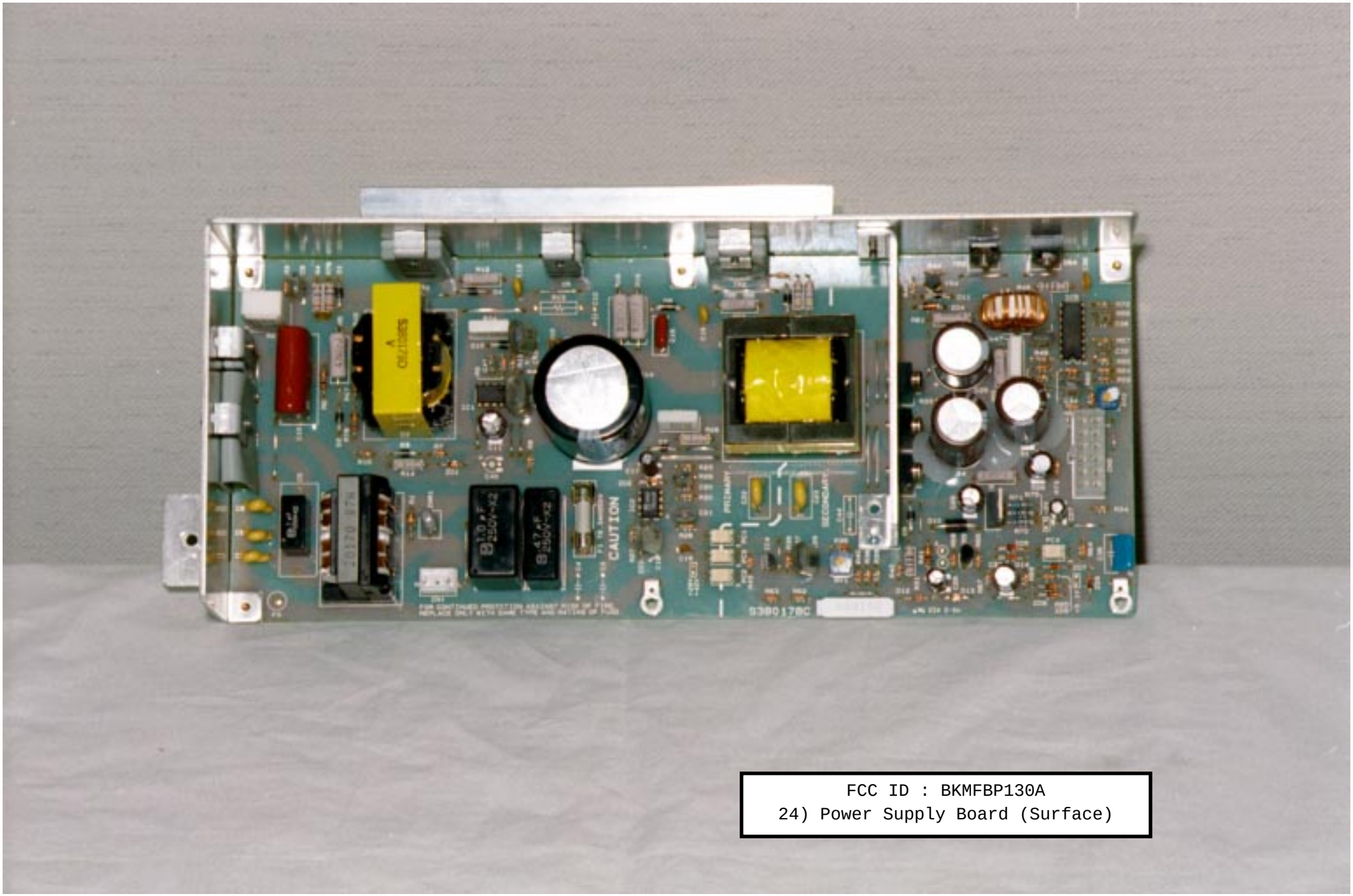

FCC ID : BKMFBP130A
24) Power Supply Board (Surface)

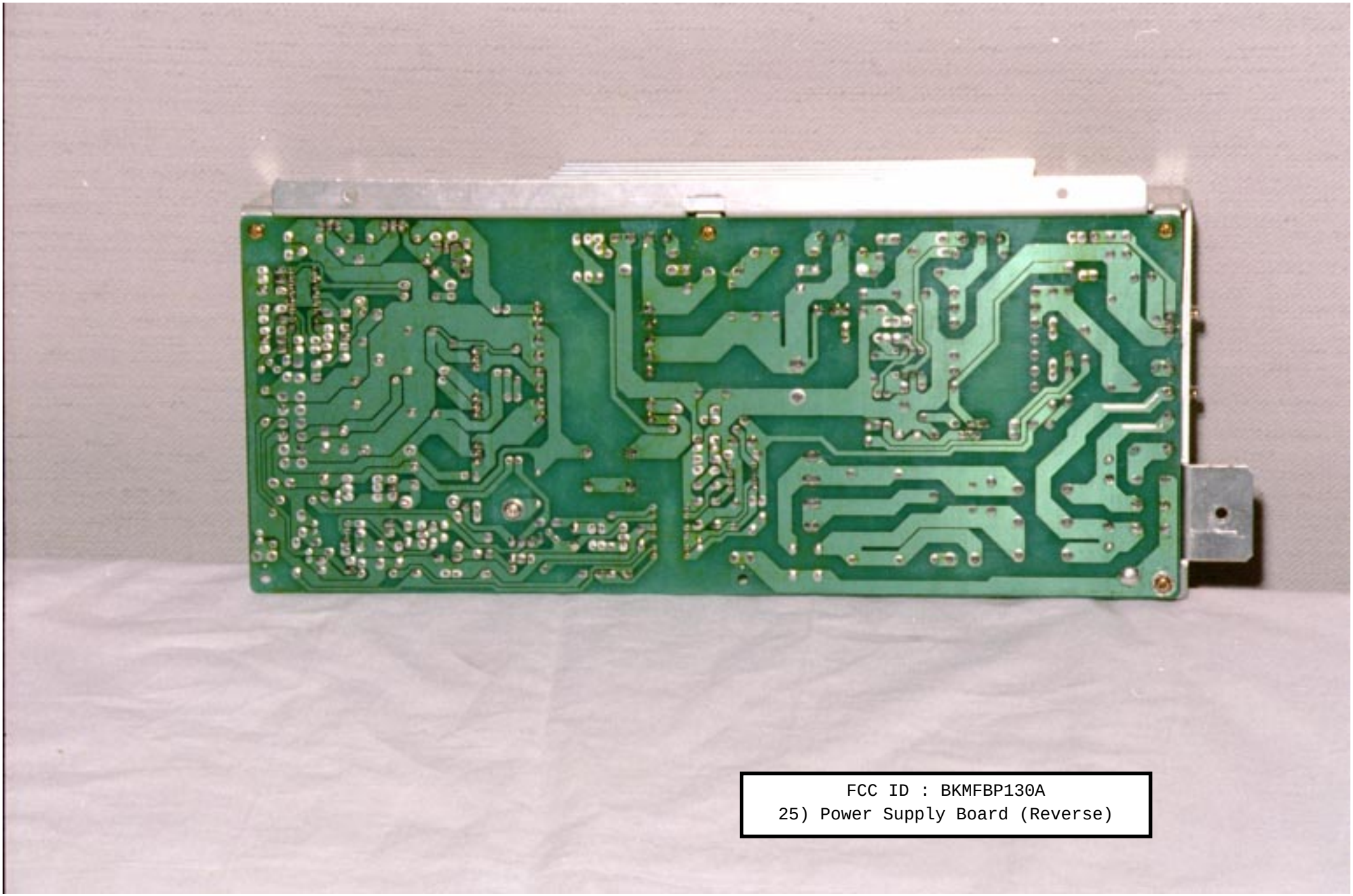

FCC ID : BKMFBP130A
25) Power Supply Board (Reverse)

FCC ID : BKMFBP130A
26) Operation panel

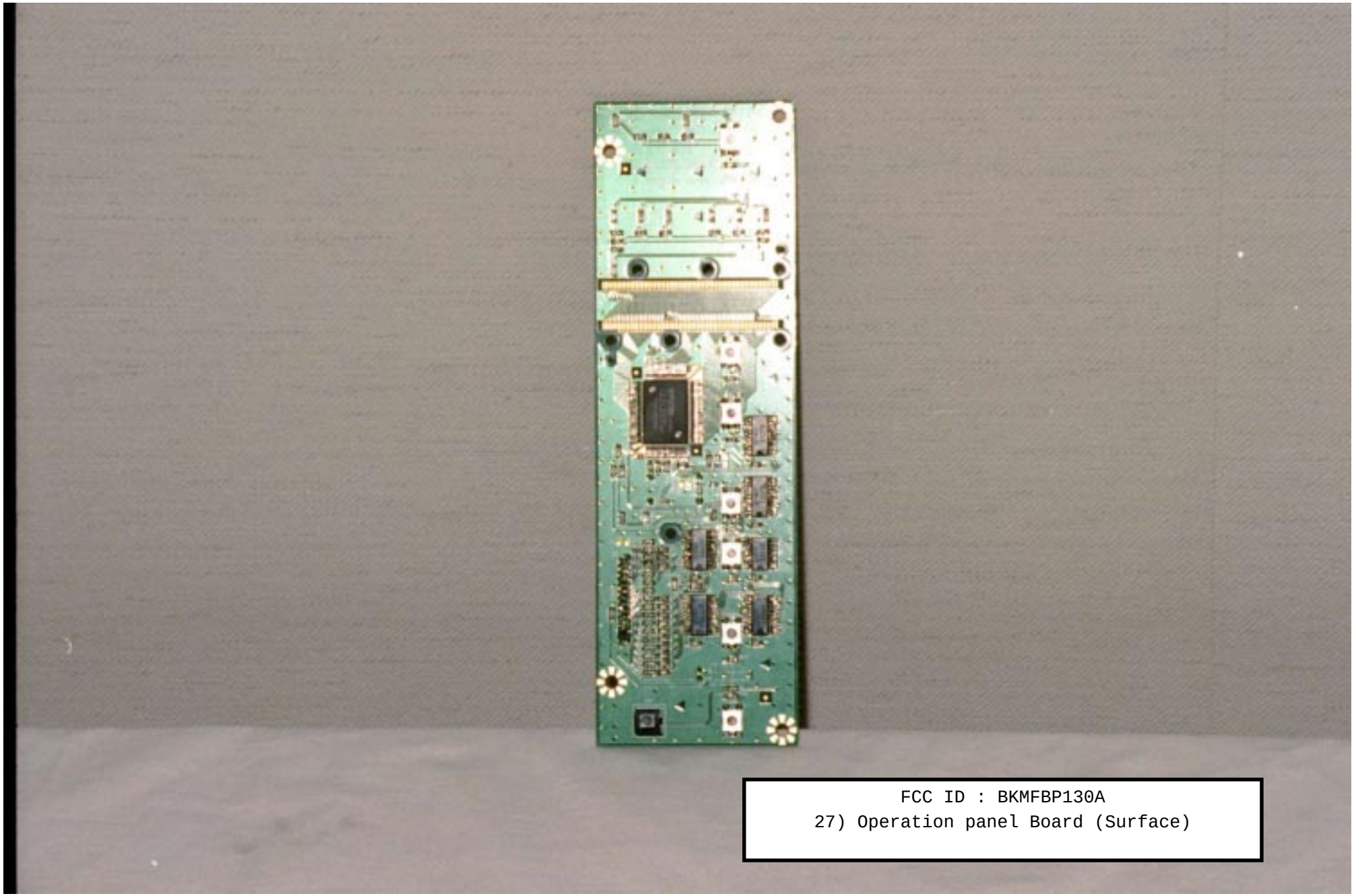

FCC ID : BKMFBP130A
27) Operation panel Board (Surface)

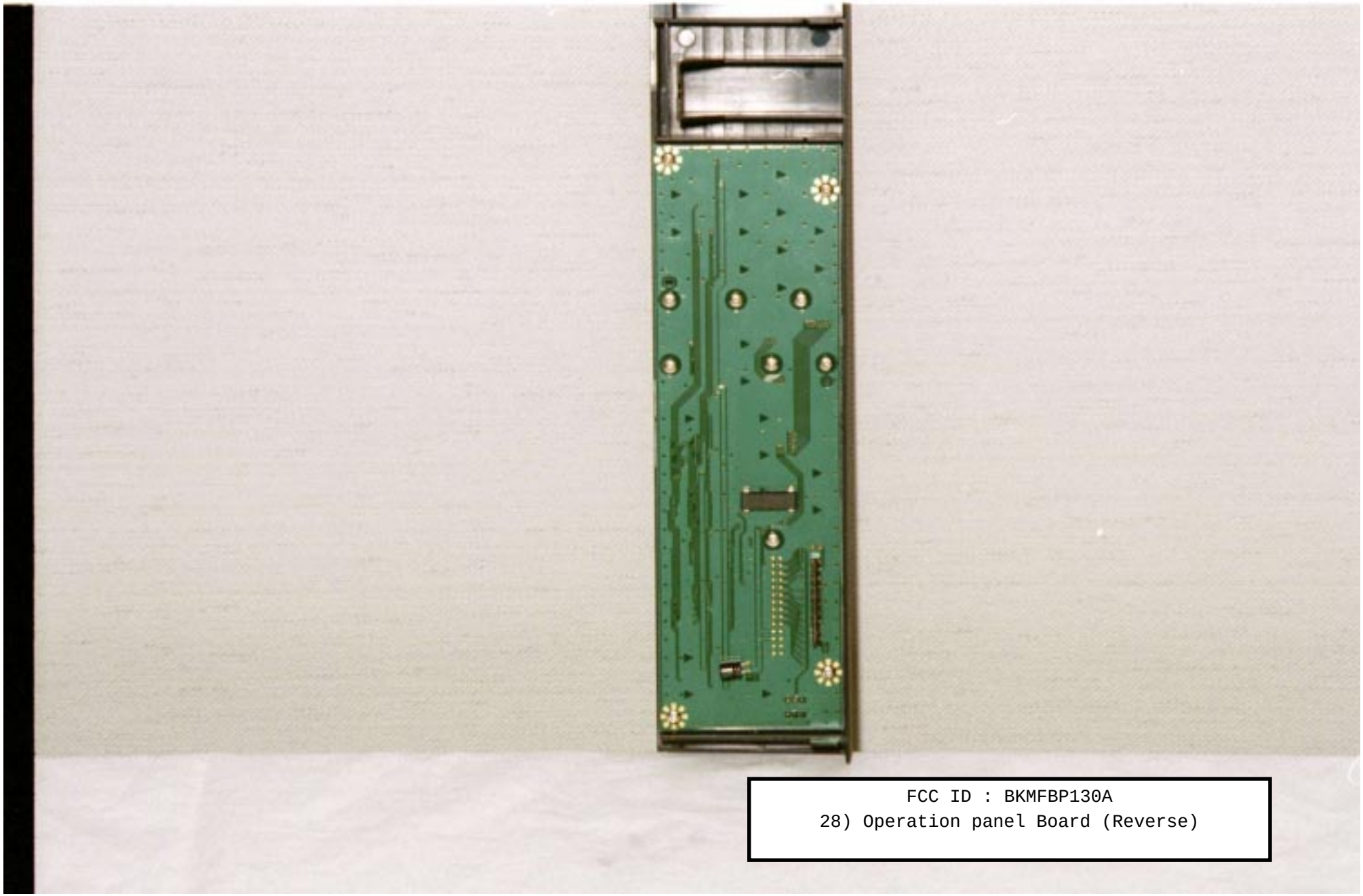

FCC ID : BKMFBP130A
28) Operation panel Board (Reverse)

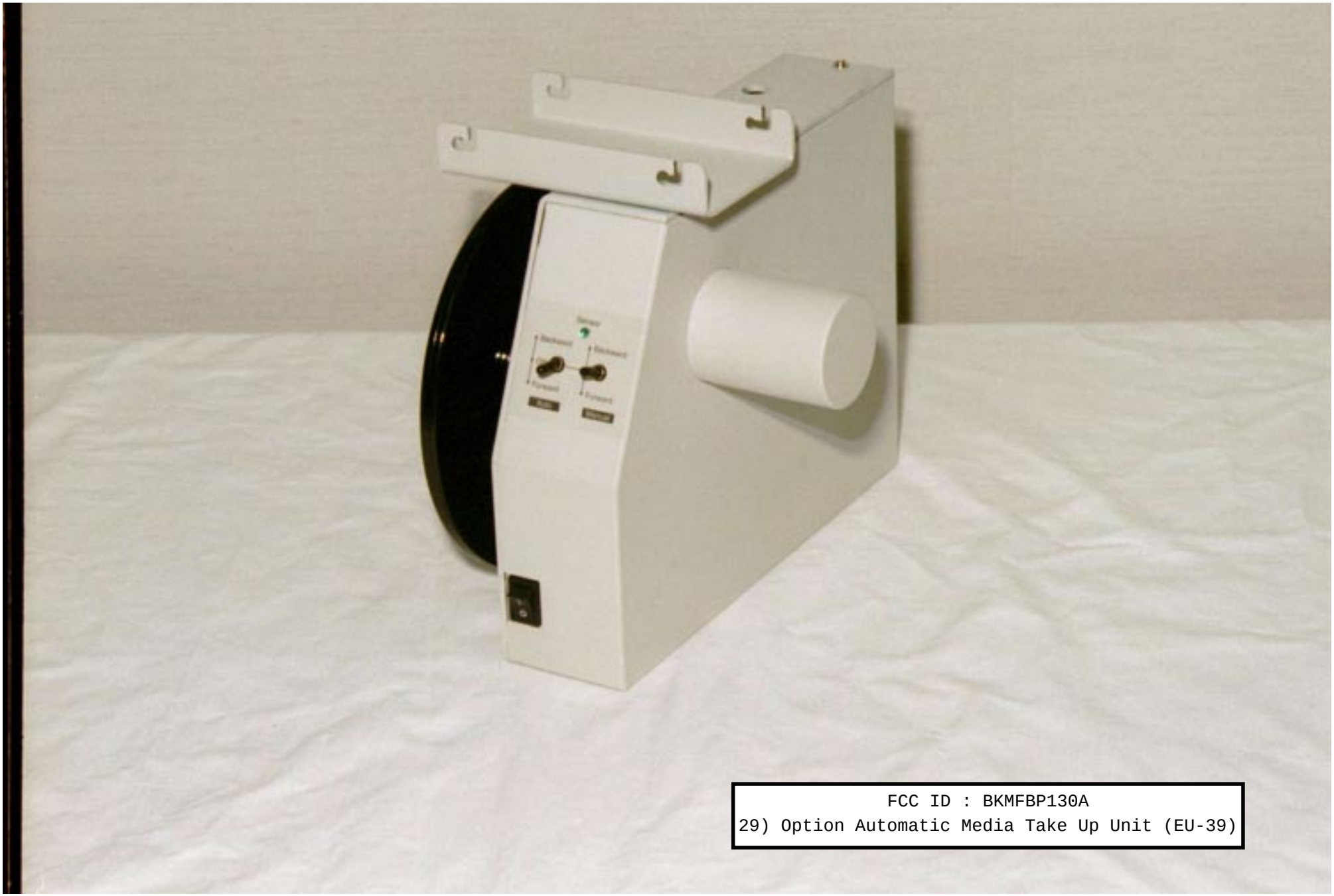

FCC ID : BKMFBP130A
29) Option Automatic Media Take Up Unit (EU-39)

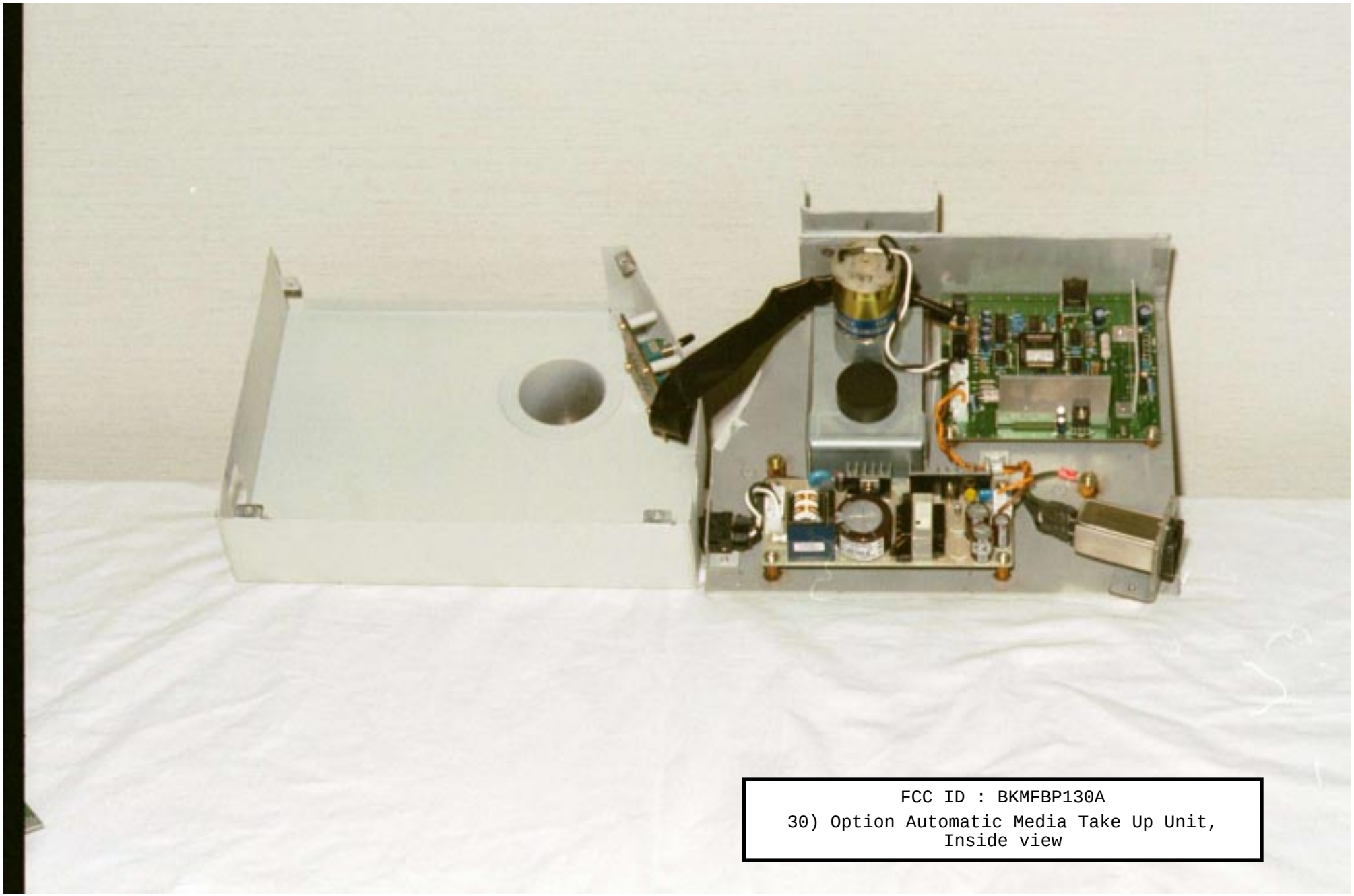

FCC ID : BKMFBP130A

30) Option Automatic Media Take Up Unit,
Inside view

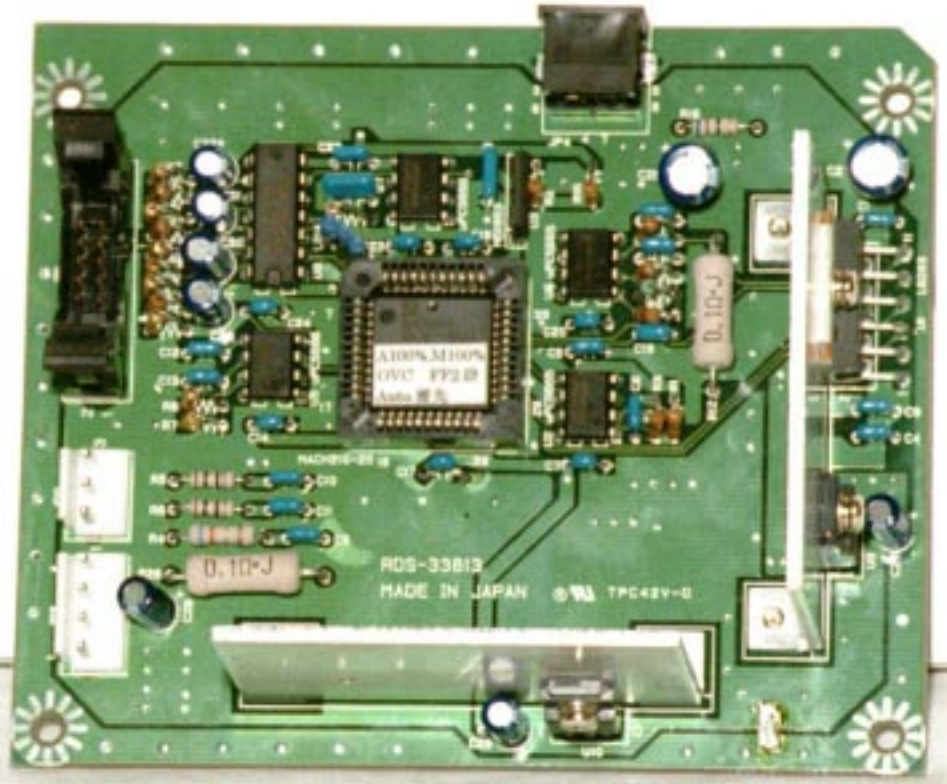

FCC ID : BKMFBP130A

31) Option Automatic Media Take Up Unit,
Main Board (Surface)

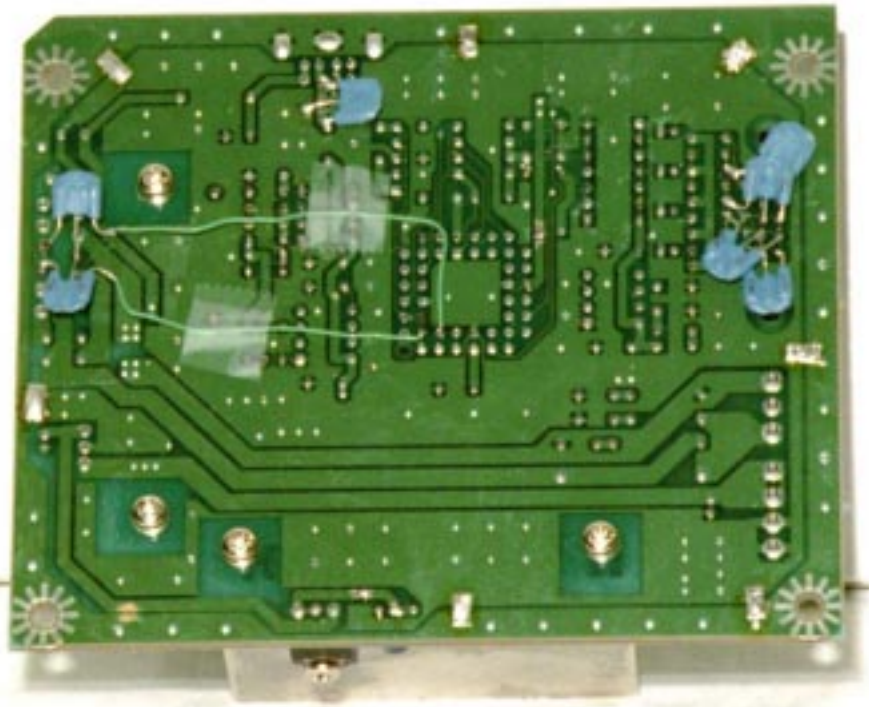

FCC ID : BKMFBP130A

32) Option Automatic Media Take Up Unit,
Main Board (Reverse)

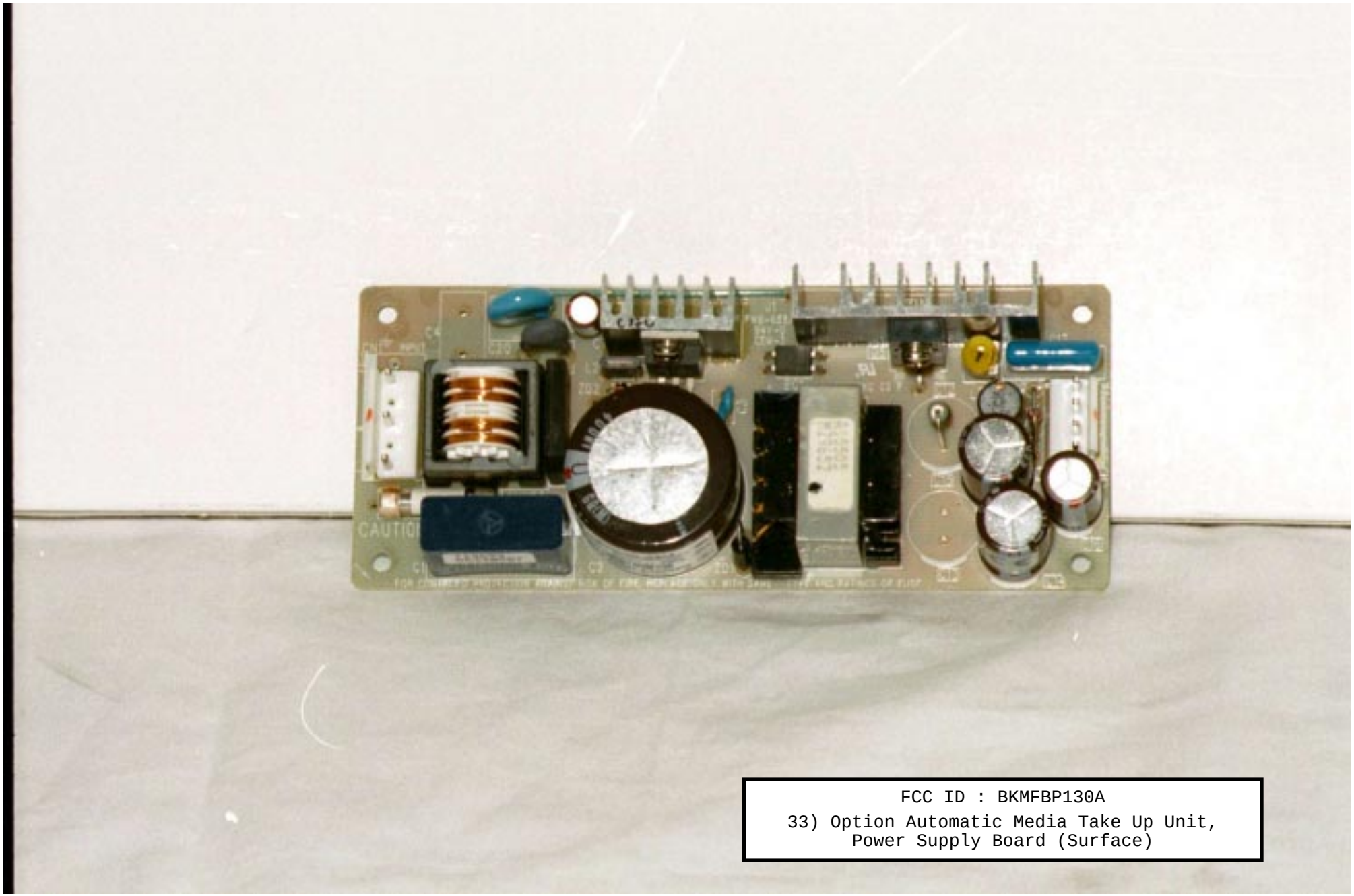

FCC ID : BKMFBP130A

33) Option Automatic Media Take Up Unit,
Power Supply Board (Surface)

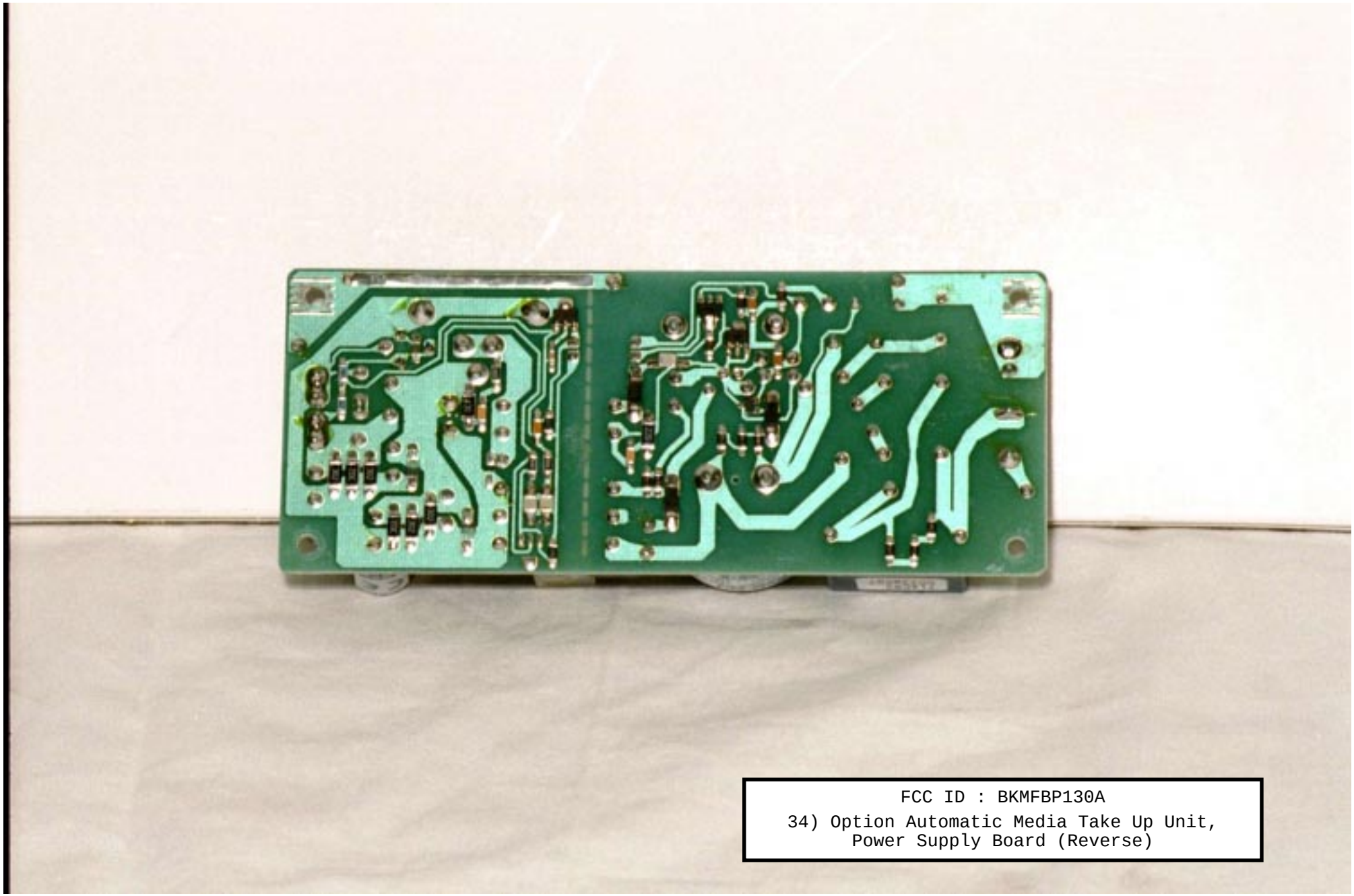

FCC ID : BKMFBP130A

34) Option Automatic Media Take Up Unit,
Power Supply Board (Reverse)

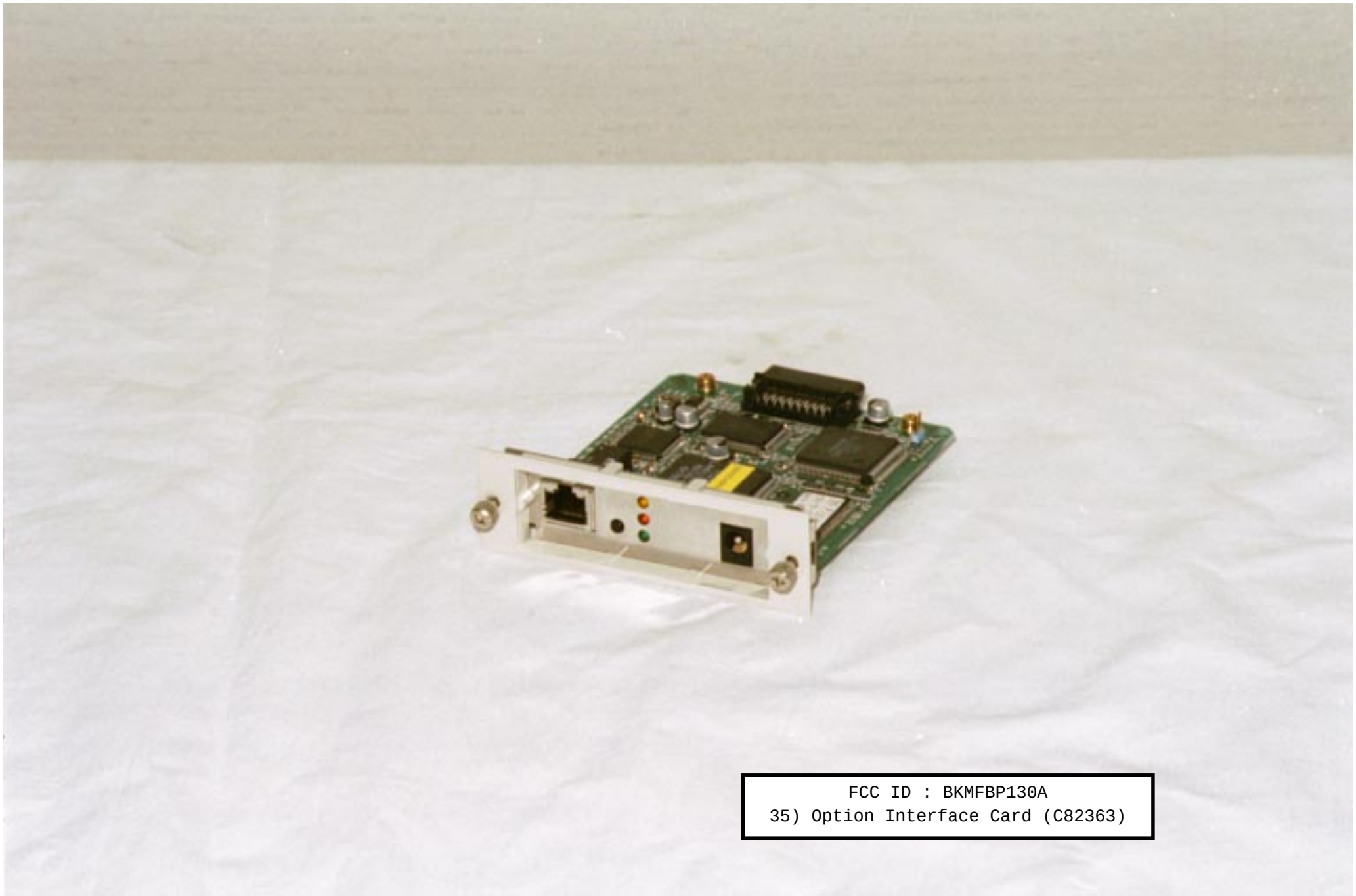

FCC ID : BKMFBP130A
35) Option Interface Card (C82363)

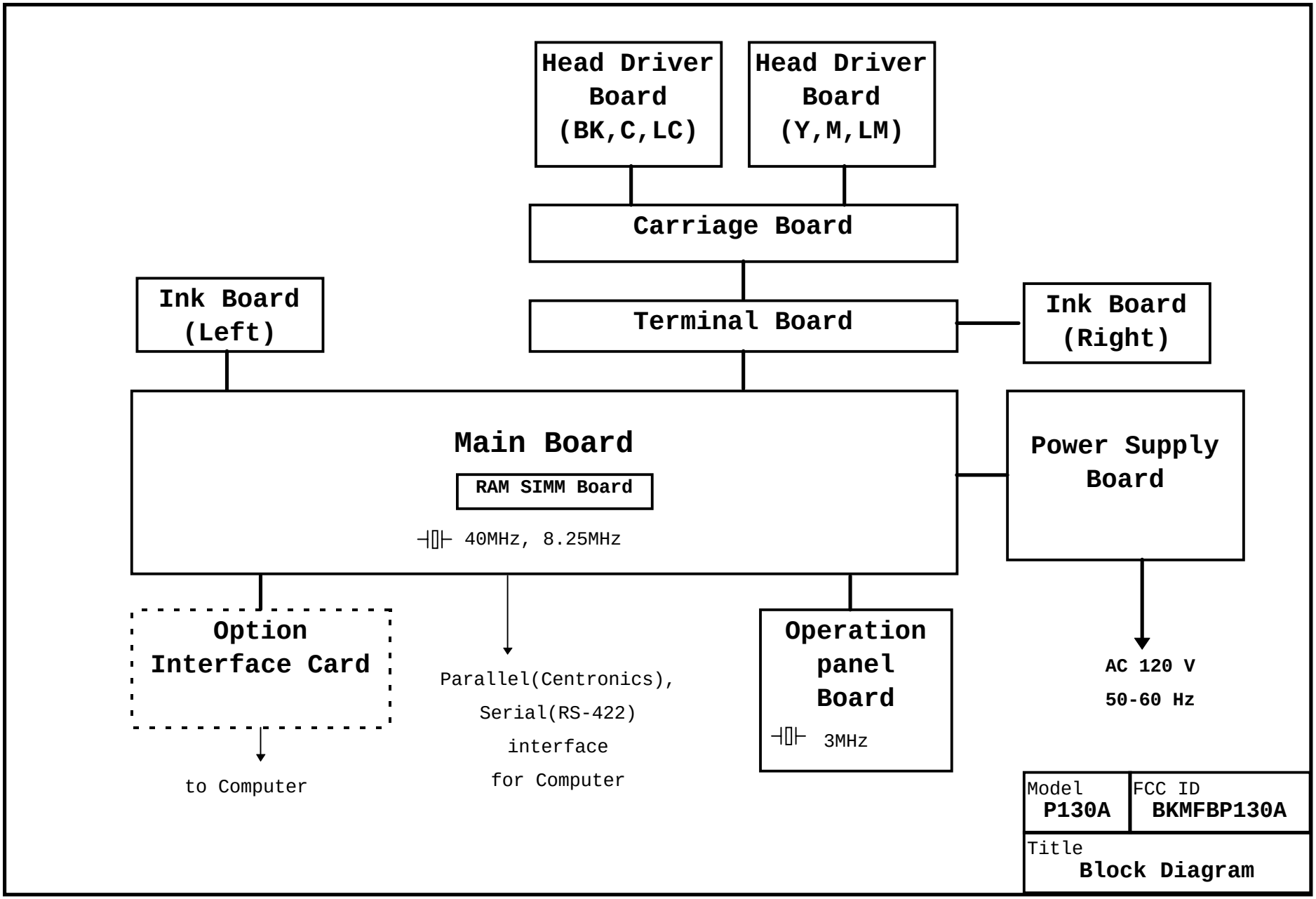
Head Driver Board (BK,C,LC)
Head Driver Board (Y,M,LM)
Carriage Board
Ink Board (Left)
Terminal Board
Ink Board (Right)
Main Board
RAM SIMM Board
40MHz, 8.25MHz
Power Supply Board
Option Interface Card
to Computer
Parallel(Centronics), Serial(RS-422) interface for Computer
Operation panel Board
3MHz
AC 120 V
50-60 Hz
Model
P130A
FCC ID
BKMFBP130A
Title
Block Diagram

EPSON

SEIKO EPSON CORPORATION

RFI MEASUREMENT TEST REPORT

FCC PART 15B CLASS B

********* CLASS B PERSONAL COMPUTERS AND PERIPHERALS *********

APPLICANT	**:**	**SEIKO EPSON CORPORATION**
EQUIPMENT	**:**	**PRINTER**
TRADE NAME	**:**	**EPSON**
MODEL NUMBER	**:**	**P130A**
FCC ID NUMBER	**:**	**BKMFBP130A**
TEST REPORT No.	**:**	**E-103-98301**

NVLAP LAB CODE 200157-0

EPSON
SEIKO EPSON CORPORATION

TEST CERTIFICATION

Applicant Information

Company	: SEIKO EPSON Corporation
Division/Section	: TP Product Safety Design Group
	Imaging & Information Products Operations
Address	: 80, Harashinden, Hirooka, Shiojiri-shi, Nagano,399-0785 Japan
	PHONE : +81-263-53-6024 FAX : +81-263-53-3544

Test Performed

Company	: SEIKO EPSON Corporation
Division/Section	: EMC Group, CS/Quality Assurance Office
Location	: 80, Harashinden, Hirooka, Shiojiri-shi, Nagano,399-0785 Japan
	PHONE: +81-263-52-5094 FAX : +81-263-54-5806
	10 meter Semi-anechoic Chamber
	FCC File No. : 31040 / SIT 1300F2
	NVLAP Lab Code : 200157-0
Test started	: 16 October, 1998
Test completed	: 20 October, 1998
Purpose of test	: Compliance with standards
Test specification(s)	: FCC Part 15B Class B (Unintentional Radiators)
Test procedure(s)	: ANSI C63.4-1992
Test engineer	: Akira Hotta
	EMC group, CS/Quality Assurance Office
Report checked by	: Atsushi Shinozaki
	Chief Engineer, EMC group, CS/Quality Assurance Office
Report approved by	: Yoshiyuki Sakurai
	Manager, EMC group, CS/Quality Assurance Office, NVLAP signatory
Report issue date	: 29 October, 1998

The test item under the test conditions and configuration shown in this test report complies with above standard.

The test item under the test conditions and configuration shown in this test report complies with above standard.

EPSON
SEIKO EPSON CORPORATION

Test Report Contents

		Page
1.	**DETAILED DESCRIPTION OF TEST ITEM**	4
	1-1 Equipment Under Test	
	1-2 Auxiliary equipment	
	1-3 Relevant Signal and Power lines	
	1-4 Positioning of Equipment	
2.	**OPERATING CONDITIONS**	8
	2-1 Operating modes	
	2-2 Operating cycles	
3.	**TEST PROCEDURE(S)**	9
4.	**EVALUATION OF TEST RESULTS**	10
	4-1 Conducted Emission Test	
	4-2 Photographs of conducted emission test	
	4-3 Radiated Emission Test	
	4-4 Photographs of radiated emission test	
5.	**SUMMARY**	18
	5-1 Test Results	
	5-2 Sample Calculations	
	5-2-1 Conducted Emission Test	
	5-2-2 Radiated Emission Test	
6.	**LIST OF UTILIZED TEST EQUIPMENT**	19
	6-1 Conducted Emission Measurement	
	6-2 Radiated Emission Measurement	
	6-3 Measurement Uncertainties	
7.	**VALIDITY OF TEST REPORT**	20
8.	**DESCRIPTION OF TEST LABORATORY**	21

EPSON
SEIKO EPSON CORPORATION

1. DETAILED DESCRIPTION OF TEST ITEM

1-1 Equipment Under Test (EUT)

Kind of equipment	: Printer
Shape	: Floor-standing type
Manufacturer	: SEIKO EPSON Corporation
Trade Name	: EPSON
Model Number	: P130A
FCC ID	: BKMFBP130A
Serial Number	: 000125
Voltage input	: AC 120 V / 60 Hz
Rated current	: 1.0 A
Port(s) / Connector(s)	: Parallel (Centronics) Serial (RS-422) 100Base-TX (Optional)
Oscillator(s) / Crystal(s)	: 3 MHz, 8.25 MHz, 40 MHz
Maximum used frequency	: 40 MHz
Remarks	: With Automatic Media Take Up Unit (EU-39) Network I/F card (C82363)

EPSON

SEIKO EPSON CORPORATION

1-2 Auxiliary equipment (AE)

AE	Name	Model (Serial number)	Manufacturer	FCC ID	Voltage input Power consumption	
1	Automatic Media Take Up Unit	EU39 (N/A)	SEIKO EPSON Corp.	N/A	AC 120 V/ 60 Hz 0.3 A	a)
2	Network I/F card	C82363 (N/A)	SEIKO EPSON Corp.	N/A	DC 5.0 V 0.8 A	a)
3	Personal computer	D3394B (SG61500245)	Hewlett-Packard	K4UVECTRAVL5	AC 120 V/ 60Hz 3.0 A	
4	CRT monitor	D2806B (KR60940225)	Hewlett-Packard	CSYSC-528UXH	AC 120 V/ 60 Hz 1.3 A	
5	Keyboard	RT6670TJP (A1050317)	Hewlett-Packard	AQ6ZG-RT687XT	DC 5.0 V 300 mA	b)
6	Personal computer	M3979 (SG6232JL6MY)	Apple Computer, Inc.	BCGM3706	AC 120 V/ 60 Hz 7.0 A	
7	CRT monitor	M2978 (CY5251A93CV)	Apple Computer, Inc.	BEJCA500	AC 120 V/ 60 Hz 1.4 A	c)
8	Keyboard	M0487 (M1547ELF3CA)	Apple Computer, Inc.	BCGM0487	- -	c)
9	Mouse	M2706 (LC6040WDT18)	Apple Computer, Inc.	BCGM2706	- -	
10	Personal computer	D5605A (SG81151767)	Hewlett-Packard	N/A (DoC)	AC 120 V/ 60 Hz 5.0 A	
11	CRT monitor	D28525 (MY80833366)	Hewlett-Packard	JVP7154E	AC 120 V/ 60 Hz 2.0 A	
12	Keyboard	SK-2502 (M9802147789)	Hewlett-Packard	GYUR41SK	DC 5.0 V 15 mA	d)
13	Mouse	M-S34 (LZA75287348)	Hewlett-Packard	DZL211029	DC 5.0 V 60 mA	d)
14	Hub	ES3008-TX (745001782)	Accton	N/A	AC 120 V/ 60 Hz 1.5 A	

a) EUT option

b) Supplied from AE3

c) Supplied from AE6

d) Supplied form AE10

EPSON

SEIKO EPSON CORPORATION

1-3 Relevant Signal and Power lines

AE = Auxiliary equipment, EUT = Equipment Under Test = Test item

Line	Name	From	To	Length	Shield	Remarks
1	Parallel I/F cable	EUT Parallel in	AE3 Parallel out	2.0 m	Yes	Metal connector
2	Serial I/F cable	EUT Serial in	AE6 Serial out	2.0 m	Yes	Metal connector
3	Network I/F cable	AE2 100Base-TX in	AE14 100Base-TX out	10 m	Yes	Metal connector
4	Video I/F cable	AE4 Video in	AE3 Video out	1.4 m	Yes	Metal connector
5	Keyboard I/F cable	AE5 Keyboard	AE3 Keyboard out	3.0 m	Yes	Metal connector
6	Video I/F cable	AE7 Video in	AE6 Video out	1.5 m	Yes	Metal connector
7	Keyboard I/F cable	AE8 Keyboard	AE6 Keyboard out	0.9 m	Yes	Metal connector
8	Mouse I/F cable	AE9 Mouse	AE8 Mouse out	0.8 m	Yes	Metal connector
9	Network I/F cable	AE14 Signal in	AE10 Signal out	10 m	Yes	Metal connector
10	Video I/F cable	AE11 Video in	AE10 Video out	1.5 m	Yes	Metal connector
11	Keyboard I/F cable	AE12 Keyboard	AE10 Keyboard out	1.8 m	Yes	Metal connector
12	Mouse I/F cable	AE13 Mouse	AE10 Mouse out	1.9 m	Yes	Metal connector
13	Printer AC cable	EUT AC 120 V	Main AC 120 V	2.0 m	No	
14	Automatic media take up unit AC cable	AE1 AC 120 V	Main AC 120 V	2.0 m	No	
15	Computer AC cable	AE3 AC 120 V	Main AC 120 V	2.0 m	No	
16	CRT AC cable	AE4 AC 120 V	Main AC 120 V	2.0 m	No	
17	Computer AC cable	AE6 AC 120 V	Main AC 120 V	2.0 m	No	
18	CRT AC cable	AE7 AC 120 V	AE6 AC 120 V out	2.0 m	No	
19	Computer AC cable	AE10 AC 120 V	Main AC 120 V	2.4 m	No	
20	CRT AC cable	AE11 AC 120 V	Main AC 120 V	2.0 m	No	
21	HUB AC cable	AE14 AC 120 V	Main AC 120 V	2.0 m	No	

1-4 Positioning of Equipment

The positioning of EUT during testing is as follows.

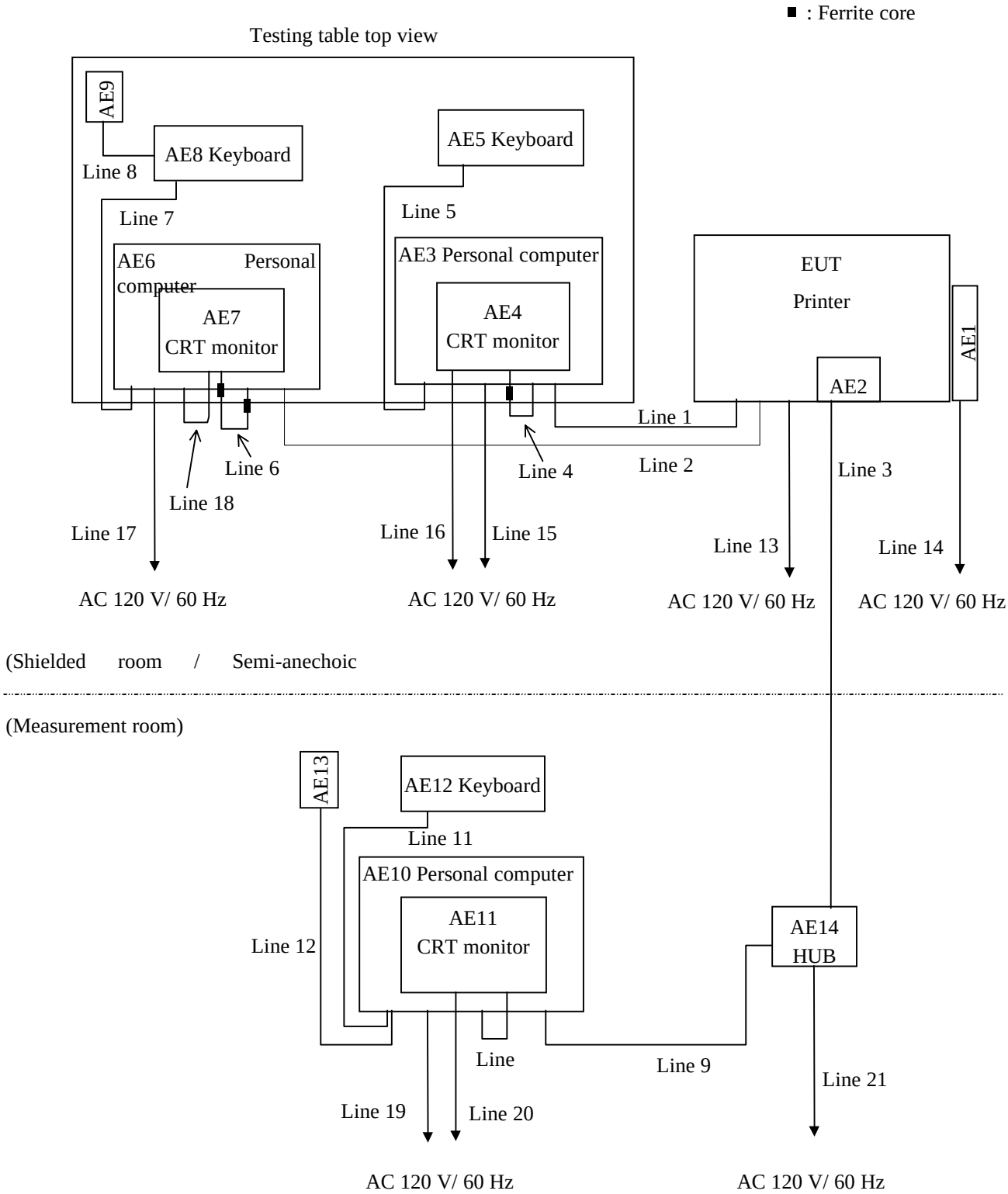

Abbreviations shown in the above diagram correspond to equipment or cables in tables in Section 1-1, 1-2, 1-3.

2. OPERATING CONDITIONS

The EUT has been operated under the following conditions during the tests.

2-1 Operating modes

The Automatic Media Take Up Unit (AE1) has been wound a paper intermittently during printing.

Mode 1 : Parallel interface mode

The EUT continuously prints character 'H' via the parallel interface (line 1) with below operating cycles.

Mode 2 : Serial interface mode

The EUT continuously prints character 'H' via the serial interface (line 2) with below operating cycles.

Mode 3 : 100Base-TX interface mode

The EUT continuously prints character 'H' via the 100Base-TX interface (line 3) with below operating cycles.

2-2 Operating cycles

Performed following operation continuously.

Mode 1

1: The Data transferred from computer(AE3)
2: 'H' characters printed by EUT
3: 'H' characters displayed on the full screen of monitor (AE4)

Mode 2

1: The Data transferred from computer(AE6)
2: 'H' characters printed by EUT
3: 'H' characters displayed on the full screen of monitor (AE7)

Mode 3

1: The Data transferred from computer(AE10)
2: 'H' characters printed by EUT
3: 'H' characters displayed on the full screen of monitor (AE11)

Note The data transfer rate on the serial I/F (RS-422) is 1.8 M bps.
The data transfer rate on the 100Base-TX is 100 M bps.

3. TEST PROCEDURE(S)

These tests have been carried out with the test procedure(s) drawn up by our laboratory based on the following test procedure(s).

Test Item	Test procedure used	Scanned Frequency Range
Conducted Emission	ANSI C63.4 - 1992	0.45 - 30 MHz
Radiated Emission	ANSI C63.4 - 1992	30 - 1000 MHz

EPSON

SEIKO EPSON CORPORATION

4. EVALUATION OF TEST RESULTS

4-1 Conducted Emission Test

Mode 1 : Parallel interface

Kind of Equipment	:	Printer	Temperature	:	22 °C
Model Name	:	P130A	Humidity	:	51 %
Serial No.	:	000125	Engineer	:	A. Hotta
Comment	:	Parallel I/F			
Detector	:	QP	Date	:	98/10/19
Points	:	6	EMI Receiver(s)	:	R/S ESH 2

Limit : [FCC] Class B

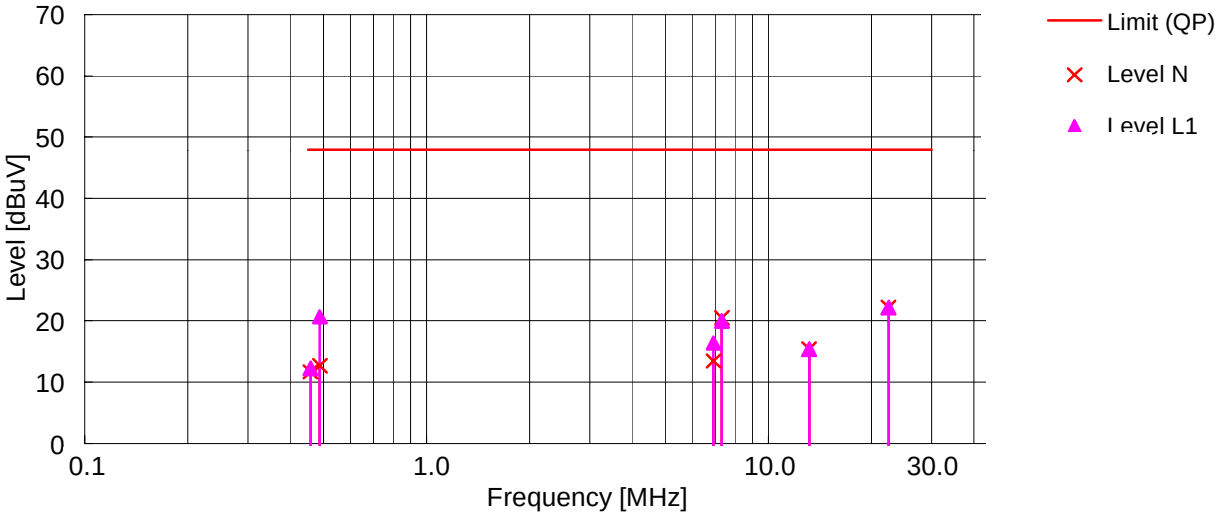

Frequency	Reading N		Reading L1		QP-AVE	QP/AVE -13	Correction Factor	Level N	Level L1	Limit	Margin
	QP	AVE	QP	AVE							
[MHz]	[dBuV]	[dBuV]	[dBuV]	[dBuV]	[dB]	[dB]	[dB]	[dBuV]	[dBuV]	[dBuV]	[dB]
0.4578	11.5	-	12.1	-	-	-	0.2	11.7	12.3	48.0	35.7
0.4873	12.5	-	20.5	-	-	-	0.2	12.7	20.7	48.0	27.3
6.9103	13.0	-	15.9	-	-	-	0.5	13.5	16.4	48.0	31.6
7.3183	20.0	-	19.5	-	-	-	0.5	20.5	20.0	48.0	27.5
13.1779	14.5	-	14.5	-	-	-	0.9	15.4	15.4	48.0	32.6
22.5013	21.0	-	21.0	-	-	-	1.2	22.2	22.2	48.0	25.8

Note :All other frequencies in the range from 450 kHz to 30 MHz have emission level of more than 10 dB below the limit.

Level = Reading + Correction Factor Correction Factor = LISN factor + Cable Loss

Level is rounded off to one decimal place.

EPSON

SEIKO EPSON CORPORATION

Mode 2 : Serial interface

Kind of Equipment	:	Printer	Temperature	:	26 °C
Model Name	:	P130A	Humidity	:	50 %
Serial No.	:	000125	Engineer	:	A. Hotta
Comment	:	Serial I/F			
Detector	:	QP	Date	:	98/10/19
Points	:	6	EMI Receiver(s)	:	R/S ESH 2

Limit : [FCC] Class B

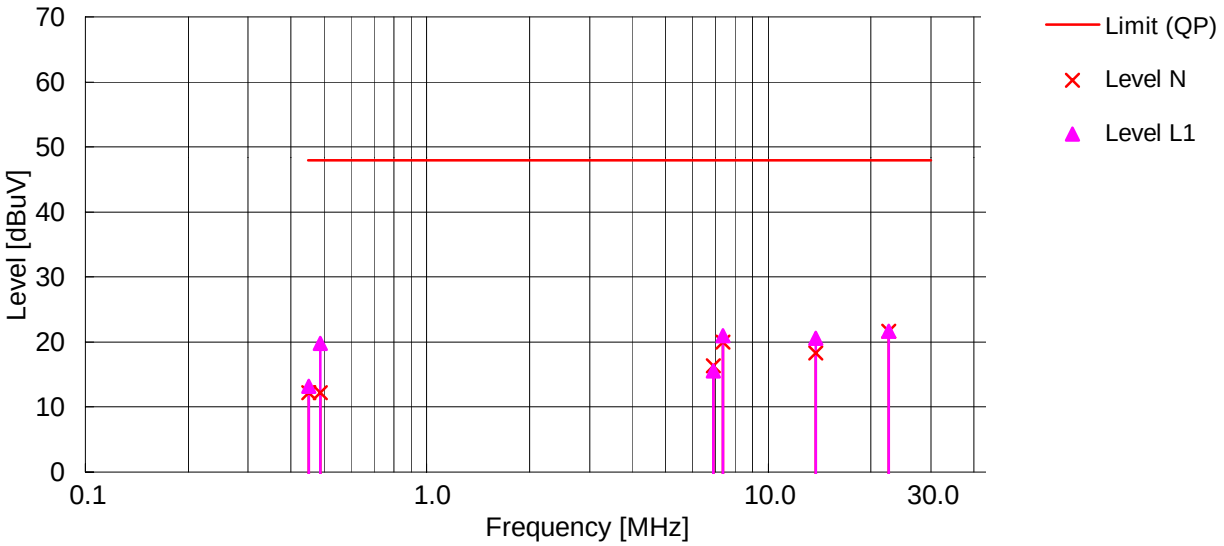

Frequency	Reading N		Reading L1		QP-AVE	QP/AVE	Correction	Level N	Level L1	Limit	Margin
	QP	AVE	QP	AVE		-13	Factor				
[MHz]	[dBuV]	[dBuV]	[dBuV]	[dBuV]	[dB]	[dB]	[dB]	[dBuV]	[dBuV]	[dBuV]	[dB]
0.4515	12.0	-	13.0	-	-	-	0.2	12.2	13.2	48.0	34.8
0.4871	12.0	-	19.6	-	-	-	0.2	12.2	19.8	48.0	28.2
6.9098	15.8	-	15.1	-	-	-	0.5	16.3	15.6	48.0	31.7
7.3749	19.5	-	20.5	-	-	-	0.5	20.0	21.0	48.0	27.0
13.7973	17.4	-	19.7	-	-	-	0.9	18.3	20.6	48.0	27.4
22.5088	20.5	-	20.5	-	-	-	1.2	21.7	21.7	48.0	26.3

Note :All other frequencies in the range from 450 kHz to 30 MHz have emission level of more than 10 dB below the limit.

Level = Reading + Correction Factor Correction Factor = LISN factor + Cable Loss

Level is rounded off to one decimal place.

EPSON

SEIKO EPSON CORPORATION

Mode 3 : 100Base-TX interface

Kind of Equipment	:	Printer	Temperature	:	25 °C
Model Name	:	P130A	Humidity	:	50 %
Serial No.	:	000125	Engineer	:	A. Hotta
Comment	:	100Base-TX I/F			
Detector	:	QP	Date	:	98/10/19
Points	:	6	EMI Receiver(s)	:	R/S ESH 2

Limit : [FCC] Class B

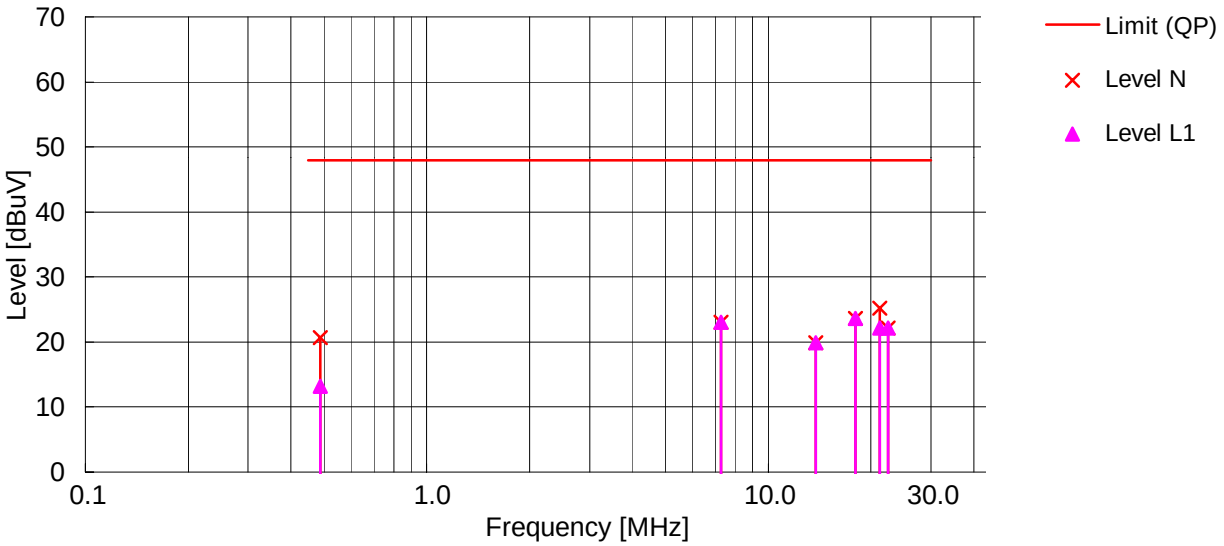

Frequency	Reading N		Reading L1		QP-AVE	QP/AVE -13	Correction Factor	Level N	Level L1	Limit	Margin
	QP	AVE	QP	AVE							
[MHz]	[dBuV]	[dBuV]	[dBuV]	[dBuV]	[dB]	[dB]	[dB]	[dBuV]	[dBuV]	[dBuV]	[dB]
0.4887	20.5	-	13.0	-	-	-	0.2	20.7	13.2	48.0	27.3
7.2601	22.5	-	22.5	-	-	-	0.5	23.0	23.0	48.0	25.0
13.7951	19.0	-	19.0	-	-	-	0.9	19.9	19.9	48.0	28.1
18.0004	22.5	-	22.5	-	-	-	1.1	23.6	23.6	48.0	24.4
21.2512	24.0	-	21.0	-	-	-	1.2	25.2	22.2	48.0	22.8
22.4976	21.0	-	21.0	-	-	-	1.2	22.2	22.2	48.0	25.8

Note :All other frequencies in the range from 450 kHz to 30 MHz have emission level of more than 10 dB below the limit.

Level = Reading + Correction Factor Correction Factor = LISN factor + Cable Loss

Level is rounded off to one decimal place.

4-2 Photographs of Conducted Emission Test

Front view

Rear view

Test set-up complies with ANSI C63.4 - 1992

This configuration of the equipment and cable produce the highest conducted emissions.

EPSON

SEIKO EPSON CORPORATION

4-3 Radiated Emission Test

Mode 1 : Parallel interface

Kind of Equipment	:	Printer	Temperature	:	23 °C
Model Name	:	P130A	Humidity	:	45 %
Serial No.	:	000125	Engineer	:	A.Hotta
Comment	:	Parallel I/F			
Detector	:	QP			
Points	:	10	Date	:	1998/10/20 9:25
Limit: [FCC] Class B<3m>			EMI Receiver(s)	:	ESS

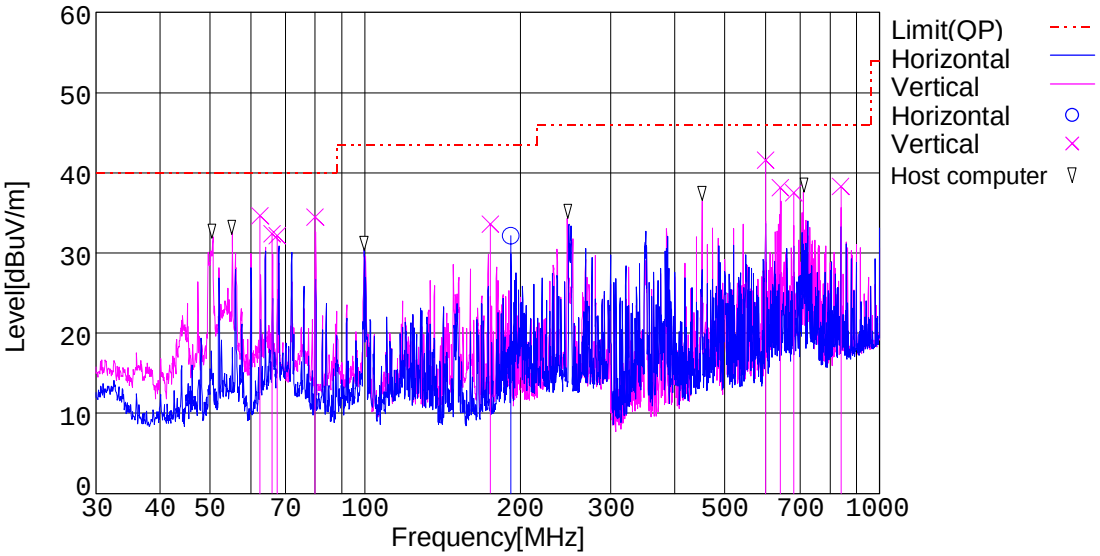

Frequency [MHz]	Meter Reading [dBuV]	Ant. Type	Antenna Factor [dB]	Total Loss [dB]	Level [dBuV/m]	Angle [degree]	Height [cm]	Pola.	Limit [dBuV/m]	Margin [dB]
62.500	46.0	BC	8.2	-19.6	34.6	76	100	Vert.	40.0	5.4
65.995	44.4	BC	7.6	-19.6	32.4	160	100	Vert.	40.0	7.6
67.500	44.2	BC	7.4	-19.5	32.1	286	100	Vert.	40.0	7.9
79.999	47.2	BC	6.5	-19.2	34.5	79	100	Vert.	40.0	5.5
174.999	35.7	BC	16.0	-18.1	33.6	347	100	Vert.	43.5	9.9
192.000	33.3	BC	16.6	-17.8	32.1	108	100	Hori.	43.5	11.4
599.995	38.3	LP	17.9	-14.6	41.6	220	114	Vert.	46.0	4.4
639.994	33.2	LP	19.2	-14.3	38.1	203	105	Vert.	46.0	7.9
679.993	31.1	LP	20.4	-14.0	37.5	194	100	Vert.	46.0	8.5
839.991	29.0	LP	22.1	-12.8	38.3	343	100	Vert.	46.0	7.7

Note : All other frequencies in the range from 30 MHz to 1000 MHz have emission level of more than 10 dB below the limit.

Level = Meter Reading + Antenna Factor + Total Loss (Total Loss = Cable Loss + Antenna Pad Loss - Amplifier Gain)

Level is rounded off to one decimal place.

EPSON

SEIKO EPSON CORPORATION

Mode 2 : Serial interface

Kind of Equipment	:	Printer	Temperature	:	24 °C
Model Name	:	P130A	Humidity	:	60 %
Serial No.	:	000125	Engineer	:	A.Hotta
Comment	:	Serial I/F			
Detector	:	QP	Date	:	1998/10/16 13:38
Points	:	11	EMI Receiver(s)	:	ESS

Limit: [FCC] Class B<3m>

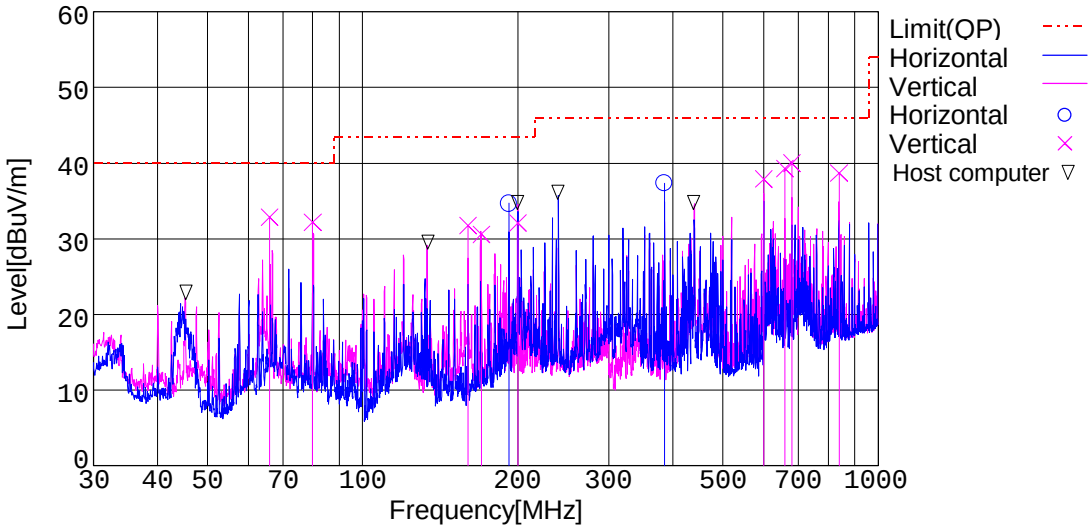

Frequency [MHz]	Meter Reading [dBuV]	Ant. Type	Antenna Factor [dB]	Total Loss [dB]	Level [dBuV/m]	Angle [degree]	Height [cm]	Pola.	Limit [dBuV/m]	Margin [dB]
65.995	44.9	BC	7.6	-19.6	32.9	185	100	Vert.	40.0	7.1
80.000	44.9	BC	6.5	-19.2	32.2	97	100	Vert.	40.0	7.8
159.998	35.1	BC	15.0	-18.3	31.8	352	100	Vert.	43.5	11.7
169.994	33.1	BC	15.7	-18.2	30.6	340	100	Vert.	43.5	12.9
192.000	35.9	BC	16.6	-17.8	34.7	96	160	Hori.	43.5	8.8
199.997	33.3	BC	16.6	-17.8	32.1	345	100	Vert.	43.5	11.4
384.972	38.6	LP	14.7	-16.0	37.3	155	100	Hori.	46.0	8.7
599.994	34.6	LP	17.9	-14.6	37.9	195	100	Vert.	46.0	8.1
659.974	33.6	LP	19.9	-14.2	39.3	202	100	Vert.	46.0	6.7
679.994	33.6	LP	20.4	-14.0	40.0	199	100	Vert.	46.0	6.0
839.992	29.4	LP	22.1	-12.8	38.7	29	100	Vert.	46.0	7.3

Note : All other frequencies in the range from 30 MHz to 1000 MHz have emission level of more than 10 dB below the limit.

Level = Meter Reading + Antenna Factor + Total Loss (Total Loss = Cable Loss + Antenna Pad Loss - Amplifier Gain)

Level is rounded off to one decimal place.

EPSON

SEIKO EPSON CORPORATION

Mode 3 : 100Base-TX interface

Kind of Equipment	:	Printer	Temperature	:	24 °C
Model Name	:	P130A	Humidity	:	60 %
Serial No.	:	000125	Engineer	:	A.Hotta
Comment	:	100Base-TX I/F			
Detector	:	QP	Date	:	1998/10/16 11:14
Points	:	11	EMI Receiver(s)	:	ESS

Limit: [FCC] Class B<3m>

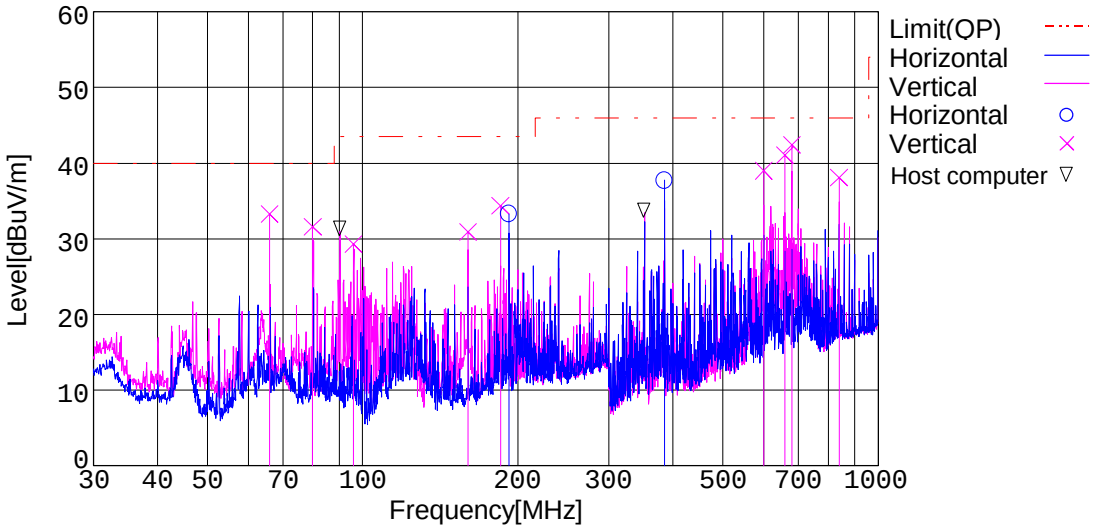

Frequency [MHz]	Meter Reading [dBuV]	Ant. Type	Antenna Factor [dB]	Total Loss [dB]	Level [dBuV/m]	Angle [degree]	Height [cm]	Pola.	Limit [dBuV/m]	Margin [dB]
65.996	45.3	BC	7.6	-19.6	33.3	182	100	Vert.	40.0	6.7
80.000	44.3	BC	6.5	-19.2	31.6	70	110	Vert.	40.0	8.4
96.000	39.2	BC	9.1	-19.0	29.3	248	100	Vert.	43.5	14.2
160.000	34.2	BC	15.0	-18.3	30.9	346	100	Vert.	43.5	12.6
184.998	35.6	BC	16.7	-17.9	34.4	347	100	Vert.	43.5	9.1
192.000	34.5	BC	16.6	-17.8	33.3	97	160	Hori.	43.5	10.2
384.972	39.0	LP	14.7	-16.0	37.7	151	127	Hori.	46.0	8.3
599.994	35.7	LP	17.9	-14.6	39.0	190	126	Vert.	46.0	7.0
659.974	35.4	LP	19.9	-14.2	41.1	195	100	Vert.	46.0	4.9
679.992	36.0	LP	20.4	-14.0	42.4	202	100	Vert.	46.0	3.6
839.992	28.8	LP	22.1	-12.8	38.1	32	100	Vert.	46.0	7.9

Note : All other frequencies in the range from 30 MHz to 1000 MHz have emission level of more than 10 dB below the limit.

Level = Meter Reading + Antenna Factor + Total Loss (Total Loss = Cable Loss + Antenna Pad Loss - Amplifier Gain)

Level is rounded off to one decimal place.

4-4 Photographs of Radiated Emission Test

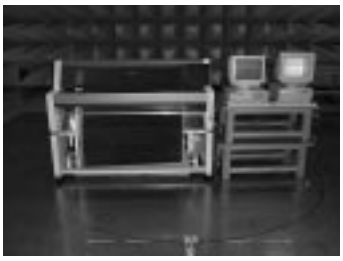

Front view

Rear view

Test set-up complies with ANSI C63.4 - 1992

This configuration of the equipment and cable produce the highest radiated emissions.

5. SUMMARY

5-1 Test Results

This test report clearly shows that the EUT complies with the FCC Part 15B Class B specification.

The minimum margins to the limits are as follows:

- Conducted measurement	22.8 dB	at	21.2512 MHz	(Mode 3)
- Radiation measurement	3.6 dB	at	679.992 MHz	(Mode 3)

This data represent the worst case emissions.

5-2 Sample Calculations

5-2-1 Conducted Emission

Example 21.2512 MHz (Mode 3)

Emission Level	=		Meter Reading		24.0	dBuV
		+	Correction Factor	+	1.2	dB
				=	25.2	dBuV
Margin	=		Limit		48.0	dBuV
		-	Emission Level	-	25.2	dBuV
				=	22.8	dB

Meter reading = Test receiver reading

The numerical value are rounded off to one decimal place.

5-2-2 Radiated Emission

Example 679.992 MHz (Mode 3)

Emission Level	=		Meter Reading		36.0	dBuV
		+	Antenna Factor	+	20.4	dB
		+	Total Loss	-	14.0	dB
				=	42.4	dBuV/m
Margin	=		Limit		46.0	dBuV/m
		-	Emission Level	-	42.4	dBuV/m
				=	3.6	dB

Meter reading = Test Receiver reading

The numerical values are rounded off to one decimal place.

6. LIST OF UTILIZED TEST EQUIPMENT

6-1 Conducted Emission Measurement

Instrument	Manufacturer	Model Number	Serial Number	Last Calibration Date	Period
Spectrum Analyzer	Hewlett Packard	8567A	2718A00363	April 28, 1998	1 Year
Quasi-peak Adapter	Hewlett Packard	85650A	2521A00798	April 3, 1998	1 Year
Test Receiver	Rhode & Schwarz	ESH2	879013/027	April 1, 1998	1 Year
LISN	Rhode & Schwarz	ESH2-Z5	890484/004	September 4, 1998	1 Year

6-2 Radiated Emission Measurement

Instrument	Manufacturer	Model Number	Serial Number	Last Calibration Date	Period
Spectrum Analyzer	Hewlett Packard	8566B	2332A02675	August 24, 1998	1 Year
Quasi-peak Adapter	Hewlett Packard	85650A	2043A00284	August 24, 1998	1 Year
Pre-amplifier	Hewlett-Packard	87405A	3207A00888	March 18,1998	1 Year
Test Receiver	Rhode & Schwarz	ESS	845420/010	January 8, 1998	1 Year
Biconical Antenna	Schwarzbeck	BBA9106	-	August 31, 1998	1 Year
Log-periodic Antenna	EMCO	3146	8902-2354	September 1, 1998	1 Year

Note : The utilized instruments are calibrated by a body that can provide traceability to a national standard.
The abbreviation of antenna types which indicate on the radiated emission test table are follows:
BC : Biconical Antenna LP : Log-periodic Antenna

6-3 Measurement Uncertainties

Measurement uncertainties are shown as below.

Conducted Emission Measurement	±2.33 dB
Radiated Emission Measurement	5.15 dB / −4.56 dB

Repeating and reproducing maximum emission set-up are not discussed herein.

7. VALIDITY OF TEST REPORT

1: The test result of this report is effective for equipment under test itself and test configuration described on the report.

2: This test report shall not be reproduced without the written approval of the laboratory.

3: This test report must not be used by client to claim product endorsement by NVLAP or any agency of the U.S. Government.

8. DESCRIPTION OF TEST LABORATORY

Bibliography

Since commencing operation in 1942 as a watch manufacturer, Seiko Epson Corporation has utilized its own original micromechatronics technologies, gained while developing quartz watches, to diversify into a variety of fields, as computers, printers and electronic devices, including semiconductors and liquid crystal displays. The phase “highly functional and highly compact” best describes the policy of our product development activities.

Since the initial electrical printer was manufactured in 1971, Seiko Epson Corporation has been working for EMC field. It is a combination of precise machine technology and electric technology.

Now EMC group has 3 semi-anechoic chambers and 8 EMI/EMC test facilities and full responsibilities on EMC testing. It is independent from any other business organizations and admired by the president as neutral and it’s independency.

Filing, Certification and Accreditation List

EMC testing

FCC	(USA)
NVLAP (Lab. Code: 200157-0)	(USA)
NMi	(Netherlands)
VCCI	(Japan)
NEMKO	(Norway)

EPSON®

EPSON STYLUS™ PRO 9000

All rights reserved. No part of this publication may be reproduced, stored in a retrieval system, or transmitted in any form or by any means, mechanical, photocopying, recording, or otherwise, without the prior written permission of SEIKO EPSON CORPORATION. No patent liability is assumed with respect to the use of the information contained herein. Neither is any liability assumed for damages resulting from the use of the information contained herein.

Neither SEIKO EPSON CORPORATION nor its affiliates shall be liable to the purchaser of this product or third parties for damages, losses, costs, or expenses incurred by purchaser or third parties as a result of: accident, misuse, or abuse of this product or unauthorized modifications, repairs, or alterations to this product, or (excluding the U.S.) failure to strictly comply with SEIKO EPSON CORPORATION's operating and maintenance instructions.

SEIKO EPSON CORPORATION shall not be liable against any damages or problems arising from the use of any options or any consumable products other than those designated as Original Epson Products or Epson Approved Products by SEIKO EPSON CORPORATION.

EPSON and EPSON ESC/P are registered trademarks and EPSON ESC/P 2 is a trademark of SEIKO EPSON CORPORATION.

Speedo, Fontware, FaceLift, Swiss, and Dutch are trademarks of Bitstream Inc.

CG Times and CG Omega are registered trademarks of Miles, Inc.

Univers is a registered trademark of Linotype AG and/or its subsidiaries.

Antique Olive is a trademark of Fonderie Olive.

Albertus is a trademark of Monotype Corporation plc.

Coronet is a trademark of Ludlow Industries (UK) Ltd.

Arial and Times New Roman are registered trademarks of Monotype Corporation plc.

General Notice: *Other product names used herein are for identification purposes only and may be trademarks of their respective owners. EPSON disclaims any and all rights in those marks.*

Copyright © 1998 by SEIKO EPSON CORPORATION, Nagano, Japan

Printed on Recycled Paper.

User's Guide

FCC Compliance Statement
For United States Usres

This equipment has been tested and found to comply with the limits for a Class B digital device, pursuant to Part 15 of the FCC Rules. These limits are designed to provide reasonable protection against harmful interference in a residential installation. This equipment generates, uses, and can radiate radio frequency energy and, if not installed and used in accordance with the instructions, may cause harmful interference to radio communications. However, there is no guarantee that interference will not occur in a particular installation. If this equipment does cause interference to radio and television reception, which can be determined by turning the equipment off and on, the user is encouraged to try to correct the interference by one or more of the following measures.

- ☐ Reorient or relocate the receiving antenna.
- ☐ Increase the separation between the equipment and receiver.
- ☐ Connect the equipment into an outlet on a circuit different from that to which the receiver is connected.
- ☐ Consult the dealer or an experienced radio/TV technician for help.

Declaration of Conformity

According to ISO / IEC Guide 22 and EN 45014

Manufacturer: SEIKO EPSON CORPORATION
Address: 3-5, Owa 3-chome, Suwa-shi,
Nagano-ken 392-8502 Japan

Representative: EPSON EUROPE B.V.
Address: Prof. J. H. Bavincklaan 5 1183
AT Amstelveen The Netherlands
The Netherlands

Declares that the Product:

Product Name: Ink Jet Printer
Model: P950A

Conforms to the following Directive(s) and Norm(s):

Directive 89 / 336 / EEC:
EN 55022 Class B
EN 61000-3-2
EN 61000-3-3
EN 50082-1
IEC 801-2
IEC 801-3
IEC 801-4

Directive 73 / 23 / EEC:
EN 60950

June 1998

Y. Ishii
President of EPSON EUROPE B.V.

Contents

Chapter 1 The Control Panel

Buttons, Lights and Messages 1-2
Buttons 1-3
Lights 1-5
Status messages. 1-6
SelecType Settings 1-8
When to use SelecType 1-8
Basic SelecType setting procedure 1-8
SelecType menus 1-10
Printing a nozzle check pattern 1-15
Performing the head alignment 1-16
Aligning the print heads 1-16
Setting the paper thickness 1-19
Printing a status sheet 1-21
Maintenance Mode 1-22
How to enter the maintenance mode 1-22
Items 1-22
Hex dump 1-22
Language 1-23

Chapter 2 Printer Software

Printer Software Introduction 2-2
Accessing the Printer Software 2-2
Accessing the printer software for Windows 2-2
Accessing the printer software for Macintosh 2-3
Using the Printer Driver 2-4
Making the Media Type setting 2-4
Using the Automatic, Custom and Advanced settings. . . . 2-5
Adjusting page orientation and printable area 2-12
Fitting documents onto the page 2-14
Using the Roll Paper Settings 2-15
Using the Printer Utilities. 2-16

Accessing the printer utilities for Windows 2-18
Accessing the printer utilities for Macintosh 2-19
Using Printer and Option Information (Windows only). . 2-19
Getting Information Through Online Help 2-21
Accessing help from Windows 2-21
Accessing help from Macintosh 2-21
Uninstalling the Printer Software (Windows only). 2-22

Chapter 3 Printer Status and Print Job Management

Checking Printer and Print Job Status for Windows 3-2
Using the Progress Meter 3-2
Using the EPSON Spool Manager. 3-3
Using EPSON Status Monitor 2. 3-4
Increasing the Print Speed (Windows only). 3-12
General tips 3-12
Using Speed & Progress 3-13
Port Configuration (Windows NT 4.0 only) 3-16
Checking Printer and Print Job Status for Macintosh 3-19
Using the EPSON StatusMonitor 3-19
Making Configuration Settings 3-20
Controlling Background Printing 3-21

Chapter 4 Paper Handling

Notes for Special Media and Other Media 4-2
EPSON special media 4-2
Using paper other than EPSON special media 4-3
Using Roll Paper 4-3
Attaching the roll paper to the spindle 4-3
Removing the roll paper from the spindle 4-4
Attaching and removing the spindle from the printer . . . 4-5
Loading the roll paper 4-9
Using the roll paper belt. 4-13
Cutting roll paper or printing page lines. 4-14
Using Cut Sheet Media 4-15
Loading cut sheet media 4-15

Printing on thick paper (0.5 mm or thicker) 4-18
Setting the Paper Basket 4-20
When feeding paper forward 4-20
When feeding paper backward 4-23

Chapter 5 Maintenance and Transportation

Replacing Ink Cartridges 5-2
Replacing the Paper Cutter 5-6
Cleaning the Printer 5-11
Transporting the Printer 5-12
A long distance 5-12
A short distance 5-12
Setting up the printer after transporting it 5-18

Chapter 6 Troubleshooting

Printer Stops Printing Unexpectedly 6-2
Head cleaning, ink charging, or ink drying is in progress . 6-2
An error has occurred 6-2
The Printer does not Turn on or Stay on 6-5
The Printer Prints Nothing 6-6
The printer is not correctly connected to the computer . . . 6-6
Your EPSON printer is not selected as the default printer . 6-6
Printer port setting does not match the printer connection port (Windows) 6-7
The printer driver doesn't have enough available memory (Macintosh) 6-7
The printer sounds like it is printing, but nothing prints . . 6-7
Printouts are Not What you Expected 6-8
Incorrect or garbled characters 6-8
Incorrect margins 6-9
Inverted image 6-9
Blank pages print 6-10
Printed color differs from the color on the screen 6-10
A ruled line shifts 6-11
Printout has smears on the bottom edge 6-11

Print Quality Could be Better 6-12
Horizontal banding 6-12
Vertical misalignment or banding 6-12
Incorrect or missing colors 6-12
Faint printout or gaps 6-13
Blurry or smeared printout 6-14
Color Documents Print in Black Only 6-15
Printing Could be Faster 6-15
Roll Paper Cannot be Cut 6-15
Paper Feed or Paper Jam Problems Occur Frequently 6-16
Roll Paper does not Eject Properly 6-18
When feeding paper forward 6-19
When feeding paper backward 6-19
Clearing Paper Jams 6-20

Appendix A Product Information

Printer Specifications A-1
Printing A-1
Printable area A-2
Mechanical A-3
Electrical A-4
Environmental A-4
Initialization A-5
Safety approvals A-6
Paper A-6
Ink cartridges A-9
System Requirements A-10
For using your printer with a PC A-10
For using your printer with a Macintosh A-10
Interface Specifications A-12
Parallel interface A-12
Serial interface A-13
Options and Consumable Products A-14
Options A-14
Consumable products A-15
EPSON special media A-16

Appendix B Customer Support Information

Contacting Customer Support B-1
For United Kingdom and the Republic of Ireland Users . . B-1
For Australian Users B-3
For Singapore Users B-5
For Hong Kong Users B-5
For Philippines Users B-6

Index

Product Information

Printer Specifications

Printing

Printing method	On-demand ink jet
Nozzle configuration	Black: 64 nozzles Color: 64 nozzles × 5 (cyan, magenta, yellow, light cyan, light magenta)

Character mode:

Character Pitch	Printing Column
10 cpi*	437

*characters per inch

Raster graphics mode:

Horizontal resolution	Printable width	Available dots
360 dpi*	1112 mm (43.78 inches)	15762
720 dpi	1112 mm (43.78 inches)	31524
1440 dpi	1112 mm (43.78 inches)	63048

*dots per inch

Resolution	Maximum 1440 dpi × 720 dpi
Print direction	Bidirectional
Control code	ESC/P Raster
Line spacing	1/6 inch or programmable in 1/360 inch increments
Paper feed speed	200 ± 10 mm seconds per 1/6 inch line
RAM	18 MB
Character tables	PC 437 (US, Standard Europe), PC 850 (Multilingual)
Character sets	EPSON Courier 10 cpi

Printable area

Roll paper and cut sheets

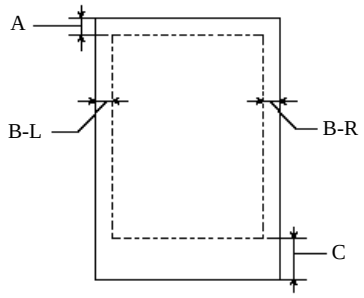

A	For roll paper, the minimum top margin is 3.0 mm (0.12")*. For cut sheets, the minimum top margin is 3.0 mm (0.12").
B-L	For roll paper, the minimum left margin is 3.0 mm (0.12")*. For cut sheets, the minimum left margin is 3.0 mm (0.12").
B-R	For roll paper, the minimum right margin is 3.0 mm (0.12")*. For cut sheets, the minimum right margin is 3.0 mm (0.12").
C	For roll paper, the minimum bottom margin is 3.0 mm (0.12")*. For cut sheets, the minimum bottom margin is 14.0 mm (0.55").

* For roll paper, the following margin widths can be selected using the control panel as follows. For details, see "ROLL MARG" in "Printer Setting menu (PRINTER SETTING MENU)".

Parameter	A	B-L	B-R	C
3 mm	3 mm	3 mm	3 mm	3 mm
15 mm	15 mm	15 mm	15 mm	15 mm
T/B 15 mm (Default)	15 mm	3 mm	3 mm	15 mm

Note:
The printer automatically detects the dimensions of the paper that is set. Print data that exceeds the printable area of the paper cannot be printed.

Mechanical

Paper feed method	Friction
Paper path	Roll paper or cut sheets with manual insertion
Dimensions (printing)	Width: 1,688 mm (66.46 inches) Depth: 699 mm (27.52 inches) Height: 1,259 mm (49.57 inches)
Weight	96 kg (211.9 lb) without the ink cartridges

Electrical

	120V Model	220–240V Model
Input voltage range	90 to 132V	208 to 264V
Rated frequency range	50 to 60 Hz	
Input frequency range	49 to 61 Hz	
Rated current	1.0A	0.5A
Power consumption	Approx. 100W (ISO10561 Letter Pattern) 30W or less in standby mode	

This product is also designed for IT power systems with Phase to Phase voltage 220-240V.

Note:
Check the label on the back of the printer for voltage information.

Environmental

Temperature	Operation: 15 to 35°C (59 to 95°F) Storage: -20 to 40°C (-4 to 104°F) Transit: -20 to 60°C (-4 to 140°F)* 1 month at 40°C (104°F) 120 hours at 60°C (140°F)
Humidity	Operation: 30 to 80% RH** Storage: 20 to 85% RH** Transit: 5 to 85% RH*,**

*Stored in shipping container
**Without condensation

Operational conditions (temperature and humidity):

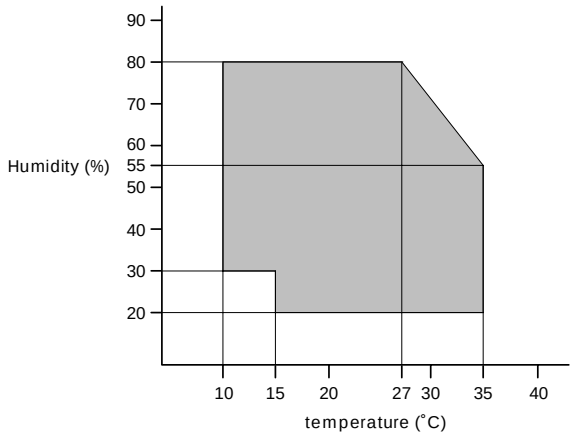

Initialization

Hardware initialization at power on:

The printer mechanism is set to its initial state.
The input data buffer and print buffer are cleared.
The printer returns to the default condition last set.

Software initialization when the ESC@ (initialize the printer) command is received:

The print buffer is cleared.
The printer returns to the default condition last set.

Panel button initialization by pressing the Pause button on the control panel for 3 seconds or more:

Print head capping occurs.
Paper is ejected, if any.
The input data buffer and print buffer are cleared.
The printer returns to the default condition last set.

Safety approvals

Safety standards:

U.S. model	UL 1950, CSA 22.2 No. 950
European model	EN60950 (VDE)

EMC:

U.S. model	FCC part 15 subpart B class B CSA C108.8 class B
European model	EN 55022 (CISPR Pub. 22) class B EN 61000-3-2 EN 61000-3-3 EN 50082-1 IEC 801-2 IEC 801-3 IEC 801-4
Australian model	AS / NZS 3548 class B

Paper

Note:
Since the quality of any particular brand or type of paper may be changed by the manufacturer at any time, EPSON cannot attest to the quality of any non-EPSON brand or type of paper. Always test samples of paper before purchasing large quantities or printing large jobs.

Roll paper:

Size	297 to 1118 mm (W) × 720 to 45000 mm (L) (8.27 to 44.02 inches × 8.27 to 1771.65 inches)
Outer diameter	103 mm (4.05 inches) maximum for standard / optional 2-inch roll paper spindle 150 mm (5.90 inches) maximum for optional 3-inch roll paper spindle
Paper types	Plain paper, special papers distribited by EPSON
Thickness (for plain paper)	0.08 to 0.11 mm (0.003 to 0.0043 inches)
Weight (for plain paper)	64 g / m^2 (17 lb) to 90 g / m^2 (24 lb)

Cut sheets:

Size	Super B0 (1118 mm × 1580 mm) B0 (1030 mm × 1456 mm) B1 (728 mm × 1030 mm) B2 (515 mm × 728 mm) B3 (364 mm × 515 mm) Super A0 (914 mm × 1292 mm) A0 (841 mm × 1189 mm) A1 (594 mm × 841 mm) A2 (420 mm × 594 mm) A3 (297 mm × 420 mm) Super A3 / B (329 mm × 483 mm) US E (34 inches × 44 inches) US D (22 inches × 34 inches) US C (17 inches × 22 inches) US B (11 inches × 17 inches)
Paper types	Plain paper, special papers distributed by EPSON.
Thickness (for plain paper)	0.08 to less than 0.11 mm (0.003 to less than 0.004 inches)
Weight (for plain paper)	64 g / m^2 (17 lb) to 90 g / m^2 (24 lb)

Note:

- *Poor quality paper may reduce print quality and cause paper jams or other problems. If you encounter problems, switch to a higher grade of paper.*
- *Do not load curled or folded paper.*
- *Use paper under the following conditions:*
  Temperature 15 to 25°C (59 to 77°F)
  Humidity 40 to 60% RH
- *EPSON Photo Quality Glossy Film should be stored under the following conditions:*
  Temperature 15 to 30°C (59 to 86°F)
  Humidity 20 to 60% RH

Ink cartridges

Colors	Black	T407***
	Cyan	T410***
	Magenta	T409***
	Yellow	T408***
	Light Cyan	T412***
	Light Magenta	T411***

Note:
The asterisks in the product numbers are substitutes for the last three digits which vary by country.

Print capacity*	Approx. 28 pages / A0 (720 dpi, 40% duty) Approx. 6,400 pages / A4 (360 dpi, 5% duty)
Cartridge life	2 years from production date if unopened; within 2 years after opening package, at 25°C (77°F)
Temperature	Storage (uninstalled): -30 to 40°C (-22 to 104°F) 1 month at 40°C (104°F) Storage (installed): -20 to 40°C (-4 to 140°F) 1 month at 40°C (104°F) Transit: -30 to 60°C (-22 to 140°F) 1 month at 40°C (140°F) 120 hours at 60°C (140°F) Freezing: -15°C (5°F)**
Dimensions	25.1 mm (W) × 260.0 mm (D) × 105.3 mm (H) (0.99 (W) × 10.24 (D) × 4.15 (H) inches)
Weight	Approx. 370 to 385 g (0.82 to 0.85 lb.)
Capacity	220 ml

*The print capacity may vary, depending on how often you use the print head cleaning function and how often you use the printer.
**Ink thaws and is usable after approximately 3 hours at 25°C (77°F).

Caution:

- *EPSON recommends the use of original EPSON ink cartridges only. Other products not manufactured by EPSON may cause damage to your printer not covered by EPSON's warranties.*
- *Do not use an ink cartridge if the expiry date has passed.*

System Requirements

For using your printer with a PC

To use your printer, you need Microsoft® Windows® 95, Windows® 98, Windows® NT 4.0.

Your computer should also meet the following system requirements:

Minimum system	Recommended system
i486/25 MHz for Windows 95 and NT 4.0 i486/66 MHz for Windows 98	Pentium II 300 MHz or higher processor
16MB RAM	128MB RAM or more
10MB hard disk space for Windows 95 and 98 20MB for Windows NT 4.0	1.2GB or more free disk space
VGA monitor	VGA or better monitor

Your computer dealer can help you update your system if it does not meet these requirements.

For using your printer with a Macintosh

To use this printer, your Apple® Macintosh® must meet the following system requirements. You also need a standard Apple System Peripheral-8 cable (8-pin mini-circular connector) or equivalent.

Your computer should also meet the following system requirements:

Minimum system	Recommended system
PowerPC	PowerPC 604e 300 MHz or higher processor
System 7.5.1	System 7.6 or later
14MB of available memory 23MB of available memory when background printing is turned on.	25MB or more of available memory 40MB of available memory when background printing is turned on.

Note:

- *The amount of available memory varies according to the number and kind of applications that are open. To see how much memory is available, choose* About This Macintosh *from the Apple menu and refer to the memory size (listed in kilobytes) under "Largest Unused Block" (1,024K=1MB).*

- *The memory requirements above are for printing on B0 (1030 mm × 1456 mm) size paper. These requirements may vary depending on the size of the paper, the type of application you are using, and the complexity of the document you want to print.*

In addition to these system and memory requirements, you also need 10MB of free hard disk space to install your printer software. To print, you need extra hard disk space amounting to about double the size of the file you want to print.

Interface Specifications

Your printer is equipped with an 8-bit parallel interface and a serial interface.

Parallel interface

The built-in parallel interface has the following characteristics:

Forward channel

Data format	8-bit parallel, IEEE-1284 compatibility mode
Synchronization	$\overline{\text{STROBE}}$ pulse
Handshake timing	BUSY and $\overline{\text{ACKNLG}}$ signals
Signal level	TTL compatible
Connector	57-30360 Amphenol connector or equivalent

Reverse channel

Transmission mode	IEEE-1284 Nibble mode
Adaptable connector	57-30360 Amphenol connector or equivalent
Synchronization	Refer to the IEEE-1284 specification
Handshaking	Refer to the IEEE-1284 specification
Signal level	IEEE-1284 Level 1 device
Data transmission timing	Refer to the IEEE-1284 specification

ECP mode

Transmission mode	IEEE-1284 ECP mode
Adaptable connector	57-30360 Amphenol connector or equivalent
Synchronization	Refer to the IEEE-1284 specification
Handshaking	Refer to the IEEE-1284 specification
Signal level	IEEE-1284 Level 1 device
Data transmission timing	Refer to the IEEE-1284 specification

Serial interface

The printer's built-in serial interface is based on the RS-423 standard. This interface has the following characteristics:

Standard	Based on RS-423
Synchronization	Synchronous
Bit rate	Approx. 1.8M bps
Handshaking	X-ON/X-OFF and DTR protocol
Word format	Data bit: 8 bits Parity bit: None Start bit: 1 bit Stop bit: 1 bit
Connector	8-pin mini-circular connector
Recommended cable	Apple System Peripheral-8 cable (part number M0197)

Options and Consumable Products

Options

The following options are available for use with your printer.

Note:
The asterisk is a substitute for the last digit of the product number, which varies by country.

Roll paper spindles

Additional roll paper spindles are available to make changing roll paper faster and easier. You can keep different types of roll paper on several spindles so they are always ready to be loaded into the printer. To use optional spindles, see “Using Roll Paper”.

Roll Media Spindle 2 inch	C811021
Roll Media Spindle 3 inch	C811031

Auto Take-Up Reel Unit

This option takes up your printed roll paper documents automatically. The unit contains the 3 inch Take-Up Reel Core, a drive unit and movable unit which attach, and drafting tape. You can also purchase the optional Take-Up Reel Core 3 inch (C815091) separately. To install and use this option, see the optional Auto Take-Up Reel Unit *User’s Guide*.

Auto Take-Up Reel Unit	C81508*
Take-Up Reel Core 3 inch	C815091

Interface cards

A number of optional interface cards are available to supplement the printer's built-in interfaces. To install optional interface cards, see your *Startup Guide*.

If you are not sure whether you need an optional interface, or if you want to know more about interfaces, contact your dealer.

Type B Ethernet I/F card (10BASE-T)	C82362*
Type B Ethernet I/F card (100BASE-TX)	C82363*

Note:
The use of some optional interface cards may increase the time required to print graphics and image data.

Consumable products

Paper cutter

If you notice the edge of the paper is not cut finely, you can replace the cutter blade. See "Replacing the Paper Cutter".

Paper Cutter Blade	C815131

Ink cartridges

To replace ink cartridges, see "Replacing Ink Cartridges".

Ink cartridge (Black)	T407011 / T407051
Ink cartridge (Cyan)	T410011 / T410051
Ink cartridge (Magenta)	T409011 / T409051
Ink cartridge (Yellow)	T408011 / T408051
Ink cartridge (Light Cyan)	T412011 / T412051
Ink cartridge (Light Magenta)	T411011 / T411051

Note:
The product number varies by country.

EPSON special media

Most plain paper works well in your printer. In addition, EPSON offers specially designed media for ink jet printers to meet most high-quality printing needs.

Roll paper

EPSON Presentation Matte Paper 44” × 25 m	S041220
EPSON Presentation Matte Paper 36” × 25 m	S041221
EPSON Glossy Photo Paper 44” × 20.7 m	S041224
EPSON Glossy Photo Paper 36” × 20.7 m	S041225
EPSON Semigloss Photo Paper 44” × 25 m	S041222
EPSON Semigloss Photo Paper 36” × 25 m	S041223

Cut sheets

EPSON Photo Paper (A3)	S041142
EPSON Photo Paper (Super A3/B)	S041143
EPSON Photo Paper (B)	S041156
EPSON Photo Quality Ink Jet Paper (A2)	S041079
EPSON Photo Quality Ink Jet Paper (A3)	S041068 S041045
EPSON Photo Quality Ink Jet Paper (Super A3/B)	S041069 S041043
EPSON Photo Quality Ink Jet Paper (B)	S041070 S041044
EPSON Photo Quality Glossy Film (Super A3/B)	S041074
EPSON Photo Quality Glossy Film (A3)	S041073
EPSON Photo Quality Glossy Film (B)	S041075

Note:

- *The availability of special media varies by country.*
- *The names of some special media vary by country. Use the product number to confirm the type of special media you need or have.*

Glossary

The following definitions apply specifically to printers.

application
A software program that helps you carry out a particular task, such as word processing or financial planning.

ASCII
American Standard Code for Information Interchange. A standardized coding system for assigning numerical codes to letters and symbols.

banding
The horizontal lines that sometimes appear when printing graphics. This occurs when the print heads are misaligned. See also *MicroWeave*.

bit
A binary digit (0 or 1), which is the smallest unit of information used by a printer or computer.

brightness
The lightness or darkness of an image.

buffer
The portion of the printer's memory used to store data before printing it.

byte
A unit of information consisting of eight bits.

characters per inch (cpi)
A measure of the size of text characters, sometimes referred to as pitch.

CMYK
Cyan (blue-green), magenta, yellow, and black. These colored inks are used to create the subtractive system array of printed color.

color matching
A method of processing color data so that colors displayed on a computer screen closely match colors in printouts. A variety of color-matching software is available. See also *ColorSync* and *sRGB*.

ColorSync
Macintosh software that is designed so you get WYSIWYG (What You See Is What You Get) color output. This software prints colors as you see them on your screen.

cpi
See *characters per inch*.

default
A value or setting that takes effect when the equipment is turned on, reset, or initialized.

dithering
A halftoning method in which dots are arranged in an orderly pattern. Dithering works best for printing images with solid colors, such as charts and graphs. See also *halftoning*.

DMA
Direct Memory Access. A data transfer feature that by-passes a computer's CPU and allows direct communication between the computer's memory and peripheral devices (such as printers).

dot matrix
A method of printing in which each letter or symbol is formed by a pattern (matrix) of individual dots.

dpi
Dots per inch. The dpi measures the resolution. See also *resolution*.

drive
A memory device, such as CD-ROM, hard disk, or floppy disk. In Windows, a letter is assigned to each drive for easy management.

driver
A software program that sends instructions to a computer peripheral to tell it what to do. For example, your printer driver accepts print data from your word processor application and sends instructions to the printer on how to print this data.

economy printing
Printing in which images are printed with fewer dots to save ink.

error diffusion
Error diffusion blends individual colored dots with the colors of the surrounding dots to create the appearance of natural colors. By blending colored dots, the printer can achieve excellent colors and subtle color gradation. This method is best suited for printing documents that contain detailed graphics or photographic images.

ESC/P
Abbreviation for Epson Standard Code for Printers. This system of commands gives you control of your printer from your computer. It is standard for all EPSON printers and supported by most application programs for personal computers.

ESC/P Raster
A command language that gives you control of your printer from your computer. Commands in this language produce laser-like features, such as enhanced graphics printing.

Finest detail
This printer driver setting automatically makes your printout sharper and clearer, especially for text. Be aware that this may increase the time required for printing.

font
A style of type designated by a family name.

grayscale
A scale of shades of gray from black to white. Grayscale is used to represent colors when printing with black ink only.

halftones
Patterns of black or colored dots used to reproduce an image.

halftoning
Method of using dot patterns to represent an image. Halftoning makes it possible to produce varying shades of gray using only black dots, or a nearly infinite array of colors using only a few colors of dots. See also *halftones*.

head alignment
The operation to correct any misalignment of the print heads. Vertical banding will be corrected.

head cleaning
The operation to clean any clogged nozzles for correct printing.

high speed printing
Printing in which images are printed in both directions. This provides faster printing.

initialization
Returns the printer to its defaults (fixed set of conditions). This happens every time you turn on the printer or reset the printer.

ink cartridge
The cartridge which contains ink.

ink jet
A method of printing in which each letter or symbol is formed by precisely spraying ink onto paper.

interface
The connection between the computer and the printer. A parallel interface transmits data one character or code at a time. A serial interface transmits data one bit at a time.

interface cable
The cable that connects between the computer and the printer.

LCD
Liquid Crystal Display. Shows various messages according to status of the printer.

local printer
The printer which is connected to the computer's port directly by interface cable.

media
Materials upon which data is printed, such as roll paper and cut sheets, plain paper, and special paper.

memory
The part of the printer's electronic system that is used to store information (data). Some information is fixed and is used to control how the printer operates. Information that is sent to the printer from the computer is stored in the memory temporarily. See also *RAM* and *ROM*.

MicroWeave
Printing in which images are printed in finer increments to reduce the possibility of banding and to produce laser-like images. See also *banding*.

monochrome
This means printing with only one color of ink, which is generally black ink.

nozzle
Fine tubes in the print head through which ink is sprayed on the page. Print quality may decline if print head nozzles are clogged.

nozzle check
A method for checking the operation of the printer. When you perform a nozzle check, the printer prints the firmware (ROM) version and a nozzle check pattern.

online help
Helpful comments related to the current window or dialog box.

parallel interface
See *interface*.

Peer-to-peer networks
Windows 95 and 98 and Windows NT 4.0 support peer-to-peer networking. Any computer can access the resources of a computer on the network.

PhotoEnhance3
The EPSON software to change the shade of tone, to correct image data and to change the sharpness of the image data.

port
An interface channel through which data is transmitted between devices.

printable area
The area of a page on which the printer can print. It is smaller than the physical size of the page due to margins.

printer driver
A software program that sends commands for using the features of a particular printer. Often shortened to “driver”. See also *driver*.

printing mode
The number of dots per inch used to represent an image. Your printer has three printing mode settings: SuperFine (1440 dpi), Fine (720 dpi), and Normal (360 dpi).

print queue
If your printer is connected to a network, print jobs that are sent to the printer while it is busy are stored in a waiting line, or print queue, until they can be printed.

Progress Meter
A meter that shows the progress of the current print job for Windows.

RAM
Random Access Memory. The portion of the printer's memory used as a buffer and for storing user-defined characters. All data stored in RAM is lost when the printer is turned off.

reset
To return a printer to its defaults by turning the printer off and then back on.

resolution
The number of dots per inch used to represent an image.

ROM
Read Only Memory. A portion of memory that can only be read and cannot be used for data storage. ROM retains its contents when you turn off the printer.

RGB
Red, green, and blue. These colors, in phosphors irradiated by the computer monitor's electron gun, are used to create the additive array of screen colors.

SelecType settings
Settings made using the printer’s control panel. In SelecType mode, various printer settings that are not available using the printer driver, such as test print settings, can be made.

serial interface
See *interface*.

spool
The first step in printing, in which the printer driver converts the print data into codes that your printer understands. This data is then sent to the printer directly or to the print server.

Spool Manager
The software program that converts print data into codes that your printer understands. See also *spool*.

sRGB
Windows software that is designed so you get WYSIWYG (What You See Is What You Get) color output. This software prints colors as you see them on your screen.

Status Monitor
The software program that allows you to check the printer's status.

subtractive colors
Colors produced by pigments that absorb some colors of light and reflect others. See also *CMYK*.

utility
A program for carrying out a specific function, which is usually related to system maintenance.

WYSIWYG
Acronym for What You See Is What You Get. This term is used to describe printout that looks exactly as it appeared on screen.

The Control Panel

Buttons, Lights and Messages

The control panel of the printer consists of 8 buttons, 12 lights, and a 20-character liquid crystal display (LCD). The control panel layout is shown below.

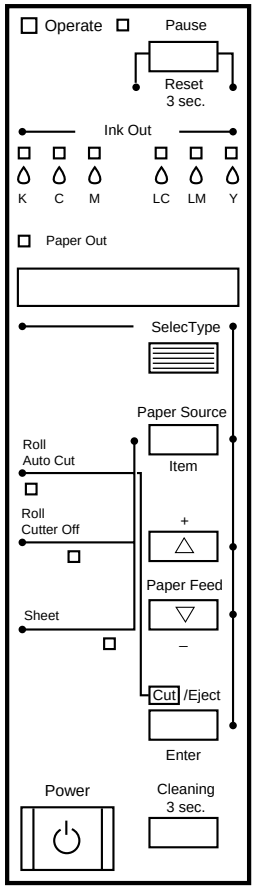

Buttons

Power	Turns the printer on and off. Press this button while pressing and holding the Pause button to enter the maintenance mode. See “Maintenance Mode”.
Cleaning 3 Sec.	Print head cleaning is performed when pressed for three seconds. Before cleaning, make sure that thick paper is not loaded in the printer.
Pause (Reset 3 Sec.)	Stops printing temporarily. Press a second time to resume printing. Clears print data in the printer memory if pressed and held for three seconds. When pressed in SelecType mode, the printer returns to READY status.
SelecType	Enters SelecType mode when pressed in READY status. When pressed in SelecType mode, a desired menu can be selected.
Paper Source (Item)	Selects the paper source: Roll Auto Cut, Roll Cutter Off or Sheet. If you press this button during the ink drying process, press Enter to be able to make your setting. When pressed in SelecType mode, a desired item can be selected from the menu.
Paper Feed □ (+)	Feeds paper in reverse. When pressed in SelecType mode, a desired parameter can be selected from the selected item. Parameters change in forward order.
Paper Feed □ (-)	Feeds paper forward. When pressed in SelecType mode, a desired parameter can be selected from the selected item. Parameters change in reverse order.

Cut/Eject (Enter)	When Sheet light is on: Ejects the cut sheet. When Roll Auto Cut light is on: Feeds the roll paper before cutting it. When Roll Cutter Off light is on: Feeds the roll paper a small amount. When Roll Cutter Off light is on and Print Page Line is on: Feeds the roll paper and then prints a page line below the document. See “PAGE LINE”. ***Note:*** *This button is effective during the ink drying process.* When pressed in SelecType mode, sets the selected parameter in the selected item as the default value. If the selected item is for execution only, the item will be executed.

Lights

= On, = Flashing, = Off

The printer is on.

Operate

The printer is receiving print data or the power has been turned off.

Operate

The printer is off.

Operate

Paper is out or the paper set lever is not in the lower position.

Paper Out

Paper is jammed.

Paper Out

The printer is ready to print data.

Pause

Printer mechanism is moving in preparation for printing or the printed paper is drying for a set time.

Pause

The printer is in pause mode or in SelecType mode, or an error has occurred.

Pause

Black ink is out, the Black ink cartridge is not installed correctly, or a wrong ink cartridge is installed.

Ink Out K

Black ink is low. The Black ink cartridge is nearly empty. Obtain replacement ink cartridge.

Ink Out K

Cyan ink is out, the Cyan ink cartridge is not installed correctly, or a wrong ink cartridge is installed.

Ink Out C

Cyan ink is low. The Cyan ink cartridge is nearly empty. Obtain replacement ink cartridge.

Ink Out C

Magenta ink is out, the Magenta ink cartridge is not installed correctly, or a wrong ink cartridge is installed.

Ink Out M

Magenta ink is low. The Magenta ink cartridge is nearly empty. Obtain replacement ink cartridge.

Ink Out M

Light Cyan ink is out, the Light Cyan ink cartridge is not installed correctly, or a wrong ink cartridge is installed.

Ink Out LC

Light Cyan ink is low. The Light Cyan ink cartridge is nearly empty. Obtain replacement ink cartridge.

Ink Out LC

Light Magenta ink is out, the Light Magenta ink cartridge is not installed correctly, or a wrong ink cartridge is installed.

Ink Out LM

Light Magenta ink is low. The Light Magenta ink cartridge is nearly empty. Obtain replacement ink cartridge.

Ink Out LM

Ink Out Y	Yellow ink is out, the Yellow ink cartridge is not installed correctly, or a wrong ink cartridge is installed.
Ink Out Y	Yellow ink is low. The Yellow ink cartridge is nearly empty. Obtain replacement ink cartridge.
Roll Auto Cut	Auto Cut is selected. The roll paper will be automatically cut after printing.
Roll Cutter Off	Printing occurs continuously without cutting.
Sheet	Cut sheet is selected. Printing is on single sheet paper. The printer ejects the paper.
All lights On	Reset has been executed by pressing the Pause button for 3 seconds or more.

Status messages

The following messages show the printer status. For error messages, see “Printer Stops Printing Unexpectedly”.

READY	W*	Ready to print data.
POWER OFF		Power is off.
INK DRY nn MIN	W*	Drying ink after printing. Wait for “nn” minutes.
RESET		The printer is being reset.
PRESS PAUSE BUTTON		Pause button needs to be pressed.
PRINTING	W*	Receiving print data.
WAIT	W*	The printer is warming up or charging ink.

PAUSE	The printer is paused. To resume printing, press the Pause button.
INK COMPART. OPEN	You are replacing the ink cartridge(s) and the ink compartment cover is open.
INK LOW	Ink cartridge(s) is (are) nearly empty. Replace ink cartridge(s) indicated by the Ink Out light(s). When the ink cartridge(s) is (are) out, printing stops. Printing can be resumed after empty cartridge(s) have been replaced.
LOAD PAPER	Paper set lever is up while loading paper. When you load paper and pull the set lever down, "PRESS PAUSE BUTTON" appears.
TURN PWR OFF AND ON	After clearing jammed paper, this message appears. Turn the printer off and on.
MAINTENANCE REQ. nnnn	Part used in the printer has nearly reached life end. Note the error number "nnnn" and contact your dealer. See "Contacting Customer Support".

* Indicates the platen gap setting is set to WIDE. When AUTO is selected, no letter appears.

SelecType Settings

When to use SelecType

The SelecType mode enables you to make printer settings similar to those you would normally make in the driver or software, as well as other additional settings—directly through the control panel. Keep the following points in mind when making SelecType settings:

- Application programs may send commands to the printer that override SelecType settings. If you are not getting the results you expect, check your application software settings.
- To see the current SelecType settings, print a status sheet.

Basic SelecType setting procedure

The following shows the basic SelecType setting procedure.

1. **Enter the SelecType mode**
   Make sure that "READY" is displayed on the LCD panel, then press the SelecType button.
   The first menu, "PRINTER SETTING MENU" is displayed.

2. **Select a menu**
   Press the SelecType button to select a desired menu.
   For example: "PRINTER SETTING MENU"

   To return to the READY status, press the Pause button.

3. **Select an item**
   Press the Item button. The first item of the selected menu is displayed. Press the Item button to select a desired item.
   For example: "PAGE LINE = ON✻" (✻ shows that the displayed parameter is the default value.)

If the item is for execution only, press the Enter button to execute the function for the item. After execution, the printer exits SelecType mode and returns to the READY status.
For example: "INIT. PANEL = EXEC." (Initializes the current panel settings to the factory-set values.)

4. **Select a parameter**
   Press the + or - button to select a parameter for the item.
   For example: "PAGE LINE = OFF". Note that the asterisk ✻ disappears. This means that the selected parameter (OFF) is not yet stored as the default value.

   To display the next item without changing the default value, press the Item button.

5. **Set the parameter**
   Press the Enter button to store the selected parameter as the default value.
   For example: "PAGE LINE = OFF✻" is displayed.

   Press the Item button to return to step 3 if you want to select another item.

6. **Exit the SelecType mode**
   Press the Pause button.

   Note:
   - ❑ *To exit the SelecType mode at anytime, press the* Pause *button.*
   - ❑ *To return to step 2, press the* SelecType *button. Press the* SelecType *button again to exit the SelecType mode.*

SelecType menus

The six SelecType menus are described below.

“Printer Setting menu (PRINTER SETTING MENU)”	Various printer settings are available.
“Test Print menu (TEST PRINT MENU)”	You can print a nozzle check pattern and status sheet.
“Printer Status menu (PRINTER STATUS MENU)”	You can see the firmware version, total prints since delivery, and ink cartridge/parts life, on the LCD.
“Paper Configuration menu (PAPER CONFIG. MENU)”	You can register the paper thickness and ink drying time, and select the specified value.
“Cutter Replacement menu (CUTTER REPLACE MENU)”	Follow this menu when you replace the cutter. For details, see “Replacing the Paper Cutter”.
“Head Alignment menu (HEAD ALIGNMENT MENU)”	You can correct any head misalignment to obtain optimum printing results. For details, see “Performing the head alignment”.

Printer Setting menu (PRINTER SETTING MENU)

This menu contains the following settings.

PLATEN GAP (Platen gap adjustment)

Normally, leave this set to AUTO. If you find that the printed image is smeared, select WIDE.

PAGE LINE

Select whether page lines are printed on the roll paper.

The Print Page Line operation changes according to the Auto Cut settings as shown.

Roll Auto Cut light	**Print Page Line**	**Printer's Operation**
On	On	Prints page line on the right side only, and cuts paper automatically after the print job.
On	Off	Cuts paper automatically after the print job.
Roll Cutter Off light	**Print Page Line**	**Printer's Operation**
On	On	Prints page lines on the right side and below the document.
On	Off	Does not print page lines nor cut.

Note:
When the Sheet light is on, the Print Page Line setting is not available.

INTERFACE (Interface selection)

When AUTO is selected, the printer automatically switches between interfaces depending on which one is receiving data first. If no more print jobs have been received, the printer returns to an idle state after 10 seconds or more. You can also select the interface from parallel, serial (for Macintosh), or optional.

PARA. I/F (Parallel interface mode selection)

Select the parallel interface mode from compatible (COMPAT.) and ECP.

CODE PAGE (Code page selection)

Select the code page from PC437 and PC850.

ROLL MARG (Roll paper margin selection)

Select margins for roll paper from 3 mm, 15 mm, and T/B 15 mm .

Margin settings	Top/Bottom	Left/Right
3 mm	3 mm	3 mm
15 mm	15 mm	15 mm
T/B 15 mm	15 mm	3 mm

Note:
The combination of "Top/Bottom=3 mm, Left/Right=15 mm" is not selectable.

When the same image is printed with a 3 mm margin and a 15 mm margin and compared, you may notice that part of the right side of the 15 mm margin image is not printed.

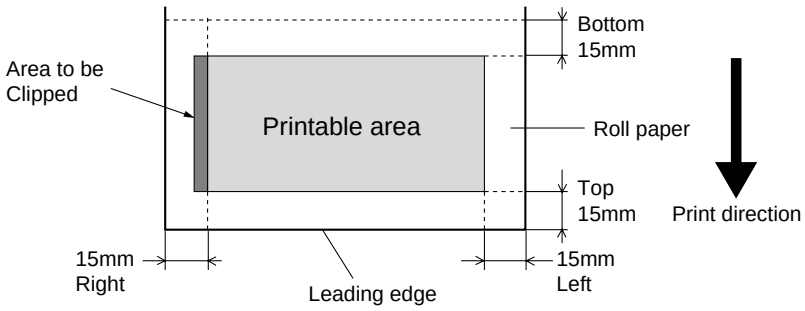

INIT. PANEL (Panel settings initialization)

Erases all the SelecType settings that you have made, and resets them all to the factory default settings.

Test Print menu (TEST PRINT MENU)

This menu contains the following settings.

NOZZLE CHECK (Nozzle check pattern printing)

Prints the nozzle check pattern for 6 nozzles. From the printing results, you can check for missing dots. Also, the firmware version is printed. For details, see “Printing a nozzle check pattern”.

You can perform nozzle check pattern printing using the utility.

STATUS CHECK (Status printing)

Prints the current SelecType status. For details, see “Printing a status sheet”.

Printer Status menu (PRINTER STATUS MENU)

This menu allows you to see the printer status from the LCD. This menu contains the following settings.

VERSION (Firmware version)

Shows the firmware version.

INK LEFT-C/M/LC/LM/Y/K (Remaining ink)

Displays the amount of ink left in the Cyan / Magenta / Light Cyan / Light Magenta / Yellow / Black ink cartridges.

E *****	F	(100-81%)
E ****	F	(80-61%)
E ***	F	(60-41%)
E **	F	(40-21%)
E *	F	(20-1%)
E	F	(less than 1%)

TOTAL PRINTS, WASTE INK, CR MOTOR (Carriage motor life), PF MOTOR (Paper feed motor life), HEAD UNIT (Head unit life),CLEANER (Cleaning unit life), CUTTER LIFE

For maintenance service persons only.

Paper Configuration menu (PAPER CONFIG. MENU)

This menu allows you to register four kinds of paper thickness together with ink drying time from 1 to 4. You can select whether the paper thickness is determined automatically (STD (standard)) or by the registered value (1, 2, 3, or 4). You can also register the ink drying time for the STD setting. How to register and recall the paper thickness setting is described in “Setting the paper thickness”.

Cutter Replacement menu (CUTTER REPLACE MENU)

This menu enables you to replace the paper cutter. For a detailed description, see “Replacing the Paper Cutter”.

Head Alignment menu (HEAD ALIGNMENT MENU)

This menu allows you to correct any head misalignment to obtain optimum printing results. For details, see “Performing the head alignment”.

You can perform the head alignment using the utility for the paper supplied by EPSON.

Printing a nozzle check pattern

A nozzle check pattern can be printed to check 6 nozzles for missing dots.

1. Load paper in your printer as described in “Using Roll Paper” or “Using Cut Sheet Media”.
2. In SelecType mode, press the SelecType button until ”TEST PRINT MENU” is displayed on the LCD panel.
3. Press the Item button to display ”NOZZLE CHECK”.
4. Press the Enter button.
   The nozzle check pattern is printed as shown below. After printing, the printer exits the SelecType mode and returns to the READY status.

Nozzle check pattern examples:

good

head cleaning necessary

xxxxxxx (firmware version)

If you find that any segments are missing from the test lines in the pattern, you need to clean the print heads. Press the Cleaning button on the control panel for more than 3 seconds or access the Head Cleaning utility from the EPSON printer utilities in your software. See“Using the Printer Utilities”.

Caution:
Before you start printing images, make sure that the nozzle check pattern printing is complete. Otherwise, print quality may decline.

Performing the head alignment

How to perform the head alignment by SelecType is described below.

General flow of the head alignment procedure

1. Load paper.
2. Set the paper thickness if necessary.
3. Print the alignment patterns (all or single).
4. For each alignment pattern, find the set that has the smallest gaps and register the number.

Aligning the print heads

1. Load paper in your printer as described in “Using Roll Paper” or “Using Cut Sheet Media”.

   Note:
   When you load roll paper, select Roll Cutter Off. Paper that is too thick may damage the paper cutter.

2. In SelecType mode, press the SelecType button until “HEAD ALIGNMENT MENU” is displayed on the LCD panel.

3. Press the Item button. “PAPER THICK = STD” appears. When you want to print on EPSON media, leave this setting as STD. When you want to print on non-EPSON media, enter the thickness value of the paper in 0.1 mm increments by pressing the + or - button.

4. Press the Enter button to register your value. “ADJUST. PATT. = ALL” appears.

5. If you want to print all the adjustment patterns, press the Enter button. If you want to print a single adjustment pattern, press the + or - button until the pattern number (#1, #2, #3...) that you want to adjust appears. Then press the Enter button. The printer starts printing all the adjustment patterns or the selected pattern.

   Note:
   It takes 25 minutes or less to print all the adjustment patterns. Use of 1.5 m roll paper is necessary.

   Head alignment pattern examples:

   Patterns #1-5, #7, and #9-12

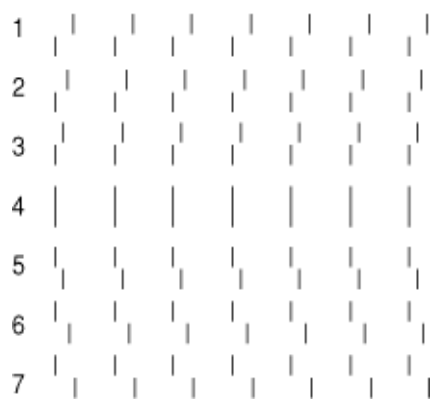

Patterns #6 and #8 only

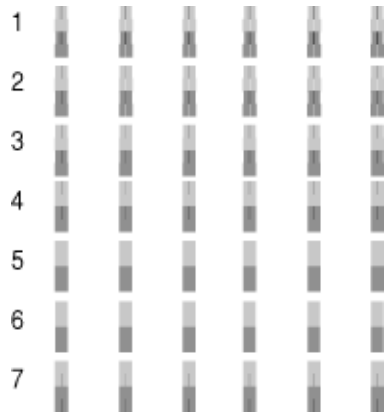

6. After printing, the pattern number and current set number are displayed (for example, #1 = 4). Select the set that has the smallest gaps, then press the + or - button to display the number for that set.

   Note:
   If set 4 shows the smallest gaps out of all the printed patterns, the print heads are aligned. Press the Pause *button to exit the mode.*

7. Press the Enter button to register the set number. The next pattern number appears. Then repeat step 6.

8. After you set the pattern(s), press the Pause button to return to the READY status.

   Note:
   You can return to step 6 by pressing the Enter *button.*

Setting the paper thickness

When you use media other than EPSON special media, you may need to set the paper thickness. You can select whether the thickness of the paper you are using is determined automatically (STD (standard)) or by the registered value (1, 2, 3, or 4) in the Paper Settings menu. To register and recall the settings you made, see the following sections. You can also register the ink drying time for respective paper settings including STD.

Registering the settings

To register the paper thickness and ink drying time settings, follow the steps below.

1. Load the paper which you want to check and register the thickness of in your printer, as described in “Using Roll Paper” or “Using Cut Sheet Media”.

   Note:
   When you load roll paper, select Roll Cutter Off. Paper that is too thick may damage the paper cutter.

2. In the SelecType mode, press the SelecType button until ”PAPER CONFIG. MENU” appears on the LCD panel.

3. Press the Item button. You may see ”PAPER NUMBER = STD”.

4. Press the + or - button to select the number you want to register as the setting. When you select STD, skip to step 8 to set the ink drying time.

5. Press the Item button. ”THICK. PAT.” appears. Then press Enter. The printer prints the paper thickness test pattern.

Paper thickness test pattern example:

6. See the printed pattern to determine which set of lines are aligned (show the smallest gap), and note the corresponding number.

7. You may see ”PAPER THICK. NO. = 1✻” . Press the + or - button to select the number noted in step 5.

   Note:
   The default value depends on the PAPER THICK. value in the Head Alignment menu and is displayed as a PAPER THICK. NO. in the Paper Configuration menu as shown below:

PAPER THICK. value	PAPER THICK. NO.
0.0 mm to 1.6 mm	1 to 17

8. Press the Item button. ”DRYING TIME” appears. Press the + or - button to select time in minutes.

9. Press the Pause button to exit the SelecType mode.

Selecting the registered settings

To select the registered settings, follow the steps below.

1. In the SelecType mode, press the SelecType button until ”PAPER CONFIG. MENU” appears on the LCD panel.

2. Press the Item button. You may see ”PAPER NUMBER = 1✻”.

3. Press the + or - button to select the number registered that you want to use. Then press the Enter button.

4. Press the Pause button to exit the SelecType mode.

Printing a status sheet

In SelecType mode, a status sheet can be printed to see the current SelecType default values.

1. Load paper as described in “Using Roll Paper” or “Using Cut Sheet Media”.

2. In SelecType mode, press the SelecType button until ”TEST PRINT MENU” is displayed.

3. Press the Item button until ”STATUS CHECK = PRINT” is displayed.

4. Press the Enter button.
   A status sheet is printed. After printing, the printer exits SelecType mode and returns to the READY status.

SelecType in Summary

SelecType mode chart

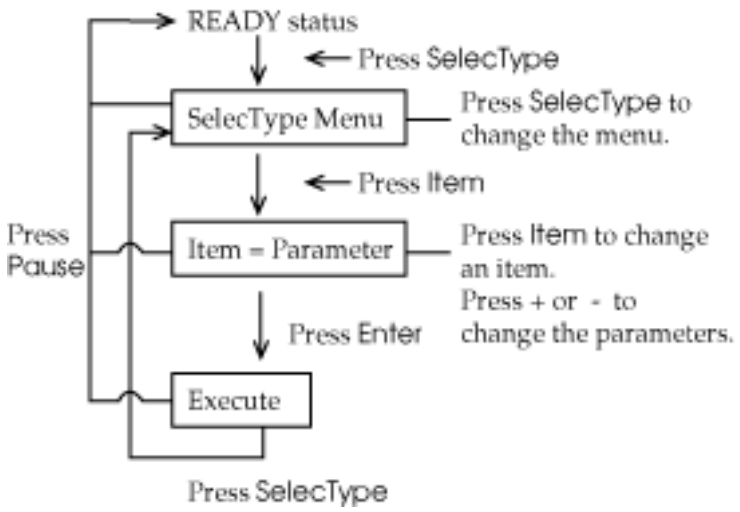

Press the Pause button any time to return to the READY status.

SelecType menu list

* Factory set value

Menu	Item	Parameters

PRINTER SETTING MENU	PLATEN GAP	AUTO*, WIDE
	PAGE LINE	ON*, OFF
	INTERFACE	AUTO*, PARALLEL, MAC, OPTION
	PARA. I/F	COMPAT.*, ECP
	CODE PAGE	PC437*, PC850
	ROLL MARG	T/B 15 MM*, 3 MM, 15 MM
	INIT. PANEL	EXEC.
TEST PRINT MENU	NOZZLE CHECK	PRINT
	STATUS CHECK	PRINT
PRINTER STATUS MENU	VERSION	XXXXXX
	INK LEFT-K	E*****F to E F
	INK LEFT-C	E*****F to E F
	INK LEFT-M	E*****F to E F
	INK LEFT-LC	E*****F to E F
	INK LEFT-LM	E*****F to E F
	INK LEFT-Y	E*****F to E F
	CUTTER LIFE	E*****F to E F
	TOTAL PRINTS	(nnnnnn)
	WASTE INK	E*****F to E F
	CR MOTOR	E*****F to E F
	PF MOTOR	E*****F to E F
	HEAD UNIT	E*****F to E F
	CLEANER	E*****F to E F

PAPER CONFIG. MENU	PAPER NUMBER	STD*, 1 to 4
	THICK. PAT.	PRINT
	PAPER THICK. NO.	1 to 17
	DRYING TIME	0 MIN* to 30 MIN
CUTTER REPLACE MENU	CUT. REPLACE	EXEC.
	OPEN LOWER COVER	—
	REPLACE CUTTER	—
	CLOSE LOWER COVER	—
HEAD ALIGNMENT MENU	PAPER THICK.	STD*, 0.0 MM to 1.6 MM (0.1 mm step)
	ADJUST. PATT.	ALL*, #1 to #12
	#1	1 to 7 (4*)
	#2	1 to 7 (4*)
	#3	1 to 7 (4*)
	#4	1 to 7 (4*)
	#5	1 to 7 (4*)
	#6	1 to 7 (4*)
	#7	1 to 7 (4*)
	#8	1 to 7 (4*)
	#9	1 to 7 (4*)
	#10	1 to 7 (4*)
	#11	1 to 7 (4*)
	#12	1 to 7 (4*)

Maintenance Mode

Using the maintenance mode you can perform a hex dump and select the language to be displayed on the LCD.

How to enter the maintenance mode

While pressing and holding the Pause button, press the Power button to turn on the printer.

”MAINTENANCE MODE” is displayed on the LCD while the printer enters maintenance mode.

Items

Item	Parameters
HEX DUMP	PRINT
LANGUAGE	ENGLISH*, FRENCH, ITALIAN, GERMAN, SPANISH, PORTUGUE.

* Factory set value

Hex dump

Data received from the host can be printed out in hexadecimal numbers.

1. Load paper into the printer.
2. In maintenance mode, press the Item button to display “HEX DUMP”.

3. Press the Enter button.
   The print data in the print buffer is printed with 16-byte hex. data in the left column, and corresponding ASCII characters in the right column.

Notes:
If the last data is less than 16 bytes, it is not printed until you press the Pause *button.*

Language

You can select the language to be displayed on the LCD.

1. In maintenance mode, press the Item button until "LANGUAGE=ENGLISH✻" is displayed.

2. If you want to change the language, press the + or - button until a suitable language is displayed.
   Example: "LANGUAGE=FRENCH"
   Press the Enter button to set the language. An asterisk appears after the language as follows:
   "LANGUAGE=FRENCH✻"

3. To exit the maintenance mode, press the Power button to turn off the printer.

Note:
To return to maintenance mode while an item is displayed, press the SelecType *button.*

Printer Software

Accessing the Printer Software

To access the printer software installed in your computer, follow the instructions below.

Accessing the printer software for Windows

You can access the printer software from most Windows applications, or from My Computer on the Windows desktop.

From Windows applications

Open the File menu and choose Print or Print Setup. Then click Printer, Setup, Options, or Properties. (Depending on your application, you may need to click a combination of these buttons.) You see the printer software window.

From My Computer

1. Double-click the My Computer icon, then double-click the Printers folder.

2. For Windows 95 and 98, right-click your printer icon, then click Properties. For Windows NT 4.0, right-click your printer icon, then click Document Defaults. You see the printer software window.

Note:
The specific features available in the printer software vary depending on the version of Windows you are using.

Accessing the printer software for Macintosh

You can access the printer driver settings in the following dialog boxes:

Print dialog box

Click Print on the File menu of your application or click Print Setup in the Page Setup dialog box.

Page Setup dialog box

Click Page Setup on the File menu of your application.

Using the Printer Driver

The printer driver software allows the computer to control the printer according to the settings you make for your printing requirements.

Making the Media Type setting

The Media Type setting determines what other settings are available, so you should always make this setting first.

On the Main menu (for Windows) and the Print dialog box (for Macintosh), select the Media Type setting that matches the paper loaded in the printer. Find your paper in the list below, then select a corresponding Media Type setting. For some kinds of paper, you have several Media Type settings to choose from.

Media Type setting	EPSON special media name
Plain Paper	—
Presentation Matte Paper	EPSON Presentation Matte Paper
Photo Paper	EPSON Glossy Photo Paper EPSON Photo Paper
Semigloss Photo Paper	EPSON Semigloss Photo Paper
Photo Quality Ink Jet Paper	EPSON Photo Quality Ink Jet Paper
Photo Quality Glossy Film	EPSON Photo Quality Glossy Film

Note:

- *The availability of special media varies by country.*
- *When you are using paper other than EPSON special media, see "Notes for Special Media and Other Media".*

Using the Automatic, Custom and Advanced settings

The settings are arranged to give you three levels of control over the printer driver, as explained below.

"Automatic settings"	The quickest and easiest way to start printing.
"Custom settings"	Choose from a list of ready-made settings suited to the kind of document you want to print. You can also add your own settings to this list.
"Advanced settings"	Allows you to make detailed settings to meet your specific needs. You can also add your settings to the Custom Settings list. .

In addition to making groups of settings that affect the overall print quality, you can also modify individual aspects of the print style and layout using the Paper menu (for Windows) and Page Setup and Layout dialog boxes (for Macintosh). See "Adjusting page orientation and printable area".

Automatic settings

When Automatic is selected on the Main menu (for Windows) or in the Print dialog box (for Macintosh), the printer driver takes care of all detailed settings based on the current Media Type and Ink settings. To make the Ink setting, click Color to print in color, or Black to print in black and white or grayscale. To make the Media Type setting, see "Making the Media Type setting".

Main Menu (for Windows)

Print dialog box (for Macintosh)

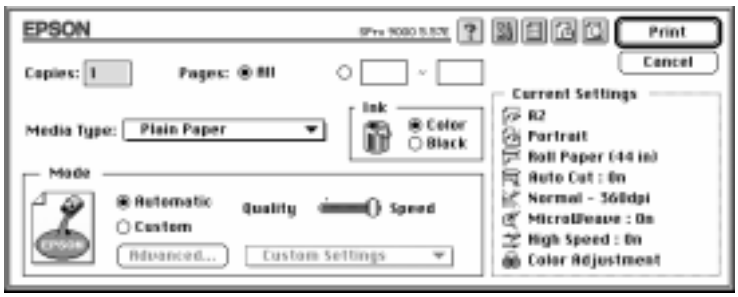

Note:

- *Depending on the media you choose in the Media Type list while* Automatic *is selected, a slider appears in the Mode box that lets you choose* Quality, Speed, *or an intermediate. Select* Quality *when print quality is more important than speed.*

❑ *Most Windows applications feature paper size and page layout settings that override similar settings in the printer driver. However, if your application does not, you should also verify the settings on the printer driver's Paper menu.*

Custom settings

The Custom settings let you make a wide range of changes with a single click of the mouse. In the Custom Settings list, you'll find ready-made settings provided by EPSON designed to match a particular kind of printout, such as graphs and charts for a presentation or images taken by a digital camera.

You can also create your own settings and add them to this list. See "Advanced settings".

The Custom Settings list includes the following ready-made settings:

Digital Camera	Good for printing scanned images or images taken with a digital camera. ***Note:*** ***Printing with Digital Camera selected may increase print time depending on your computer system and the amount of data contained in your image.***
Text/Graph	Good for printing presentation documents such as graphs and charts.
PhotoEnhance3	Best for printing video images or scanned images. This setting automatically adjusts the contrast, saturation, and brightness of the original image data to produce sharper, more vivid color printouts. PhotoEnhance3 does not affect your original image data. ***Note:*** ***Printing with PhotoEnhance3 selected may increase print time depending on your computer system and the amount of data contained in your image.***

Advanced Photo	Good for printing scanned photos and digitally-captured images in high quality. Also helps prevent the misprinting of ink dots that may occur due to the movement of the print heads and paper.
ICM (For Windows 95, and 98)	ICM (Image Color Matching). This feature automatically adjusts printout colors to match colors on your screen.
sRGB (For Windows)	Best for color matching with other sRGB devices.
ColorSync (For Macintosh)	This feature automatically adjusts printout colors to match colors on your screen.

Follow the steps below to select a Custom setting:

1. Click the Custom button on the "Main Menu (for Windows)" or in the "Print dialog box (for Macintosh)".

2. From the Custom Settings list, select the most appropriate setting for the type of document or image you will print.

3. When you choose a Custom setting, other settings such as Print Quality, Halftoning, and Color Adjustment are set automatically. Changes are shown in the Current Settings display at the bottom of the Main menu (for Windows) or on the right side of the Print dialog box (for Macintosh).

4. Before printing, be sure to verify the Media Type and Ink settings, as they may be affected by the Custom setting you select. See "Making the Media Type setting".

Advanced settings

The Advanced settings give you complete control over your printing environment. Use these settings to experiment with new printing ideas, or to fine-tune a range of print settings to meet your individual needs. Once you are satisfied with your new settings, you can give them a name and add them to the Custom Settings list.

Follow the instructions below to make and save Advanced settings.

Note:
The printer driver screens that appear in this procedure are for Windows 95 and 98. The appearance of the Windows NT 4.0 printer driver screens differ only slightly.

1. Click the Custom button on the "Main Menu (for Windows)" or in the "Print dialog box (for Macintosh)" and then click Advanced. The following dialog box appears:

Advanced menu (for Windows)

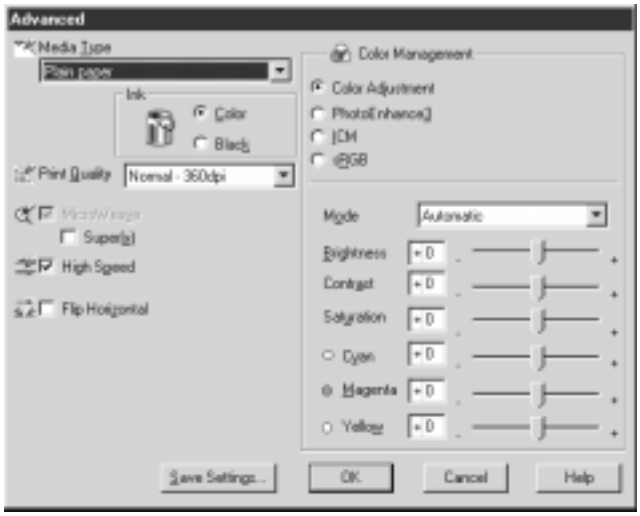

Advanced dialog box (for Macintosh)

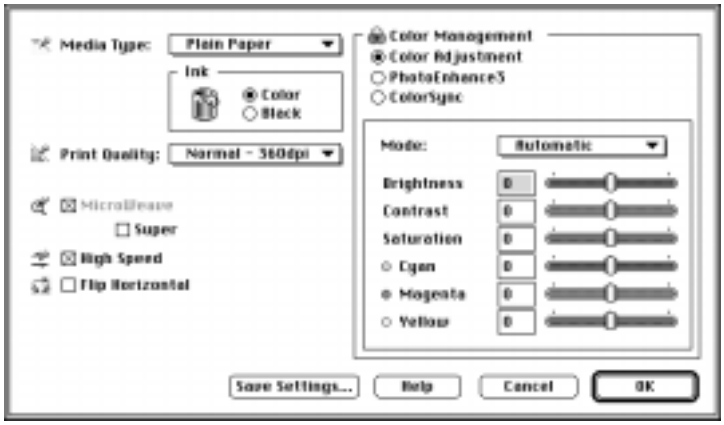

2. Select the Media Type loaded in the printer. For details, see “Making the Media Type setting”.

3. Choose Color or Black in the Ink options.

4. Select a Print Quality setting.

5. Make other settings as needed. For details, see online help.

   Note:
   Some settings are enabled or disabled depending on the Media Type, Ink, and Print Quality settings you make.

6. Click OK to apply your settings and return to the Main Menu (for Windows) or Print dialog box (for Macintosh). If you want to return to the previous screen without applying your settings, click Cancel.

To save your Advanced settings, click Save Settings in the Advanced settings dialog box. The Custom Settings dialog box appears:

Custom Settings dialog box (for Windows)

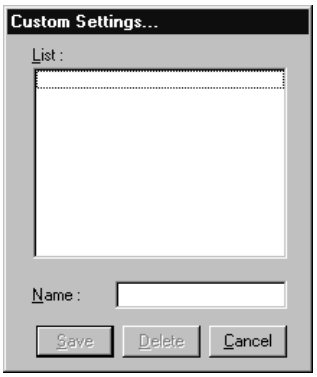

Custom Settings dialog box (for Macintosh)

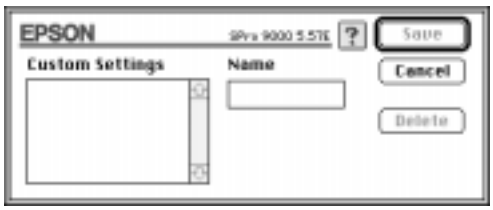

Type a unique name (up to 16 characters) for your settings in the Name box, and click the Save button. Your settings will be added to the Custom Settings list.

You can save up to 10 groups of settings. You can select your saved group of settings from the settings list on the “Main Menu (for Windows)” or in the “Print dialog box (for Macintosh)”.

Note:

- *The names of the ready-made settings provided by EPSON cannot be applied to your new settings.*
- *To delete a setting, select the setting in the Custom Settings dialog box and click* Delete.
- *You cannot delete ready-made settings from the Custom Settings list.*

When you select your saved settings in the Custom Settings list, be aware that making new settings, for example Media Type and Ink settings, may change your custom settings. This may cause unexpected results in your printout. If this happens, reselect your saved settings and try printing again.

Adjusting page orientation and printable area

You can adjust the page orientation and printable area on the Paper menu for Windows or in the Page Setup dialog box for Macintosh.

Paper menu (for Windows)

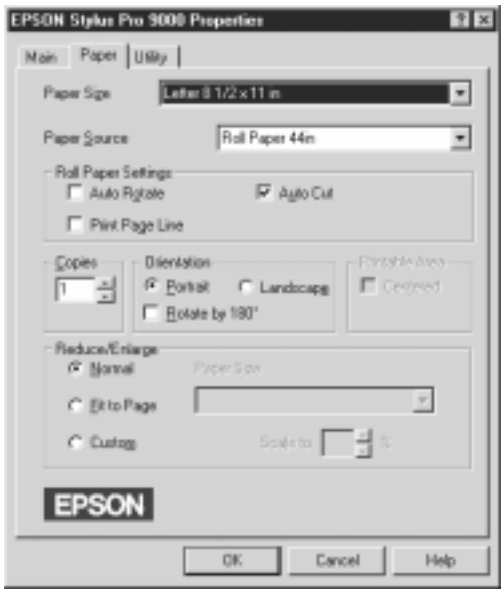

Page Setup dialog box (for Macintosh)

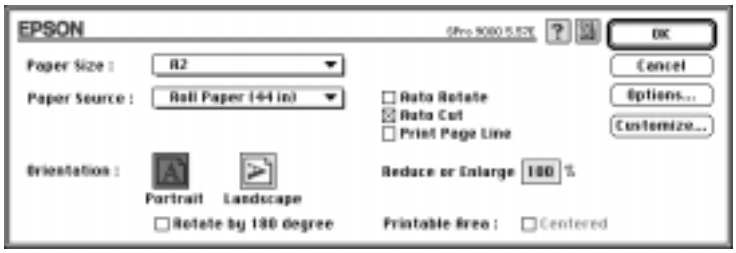

You can change the following settings:

Orientation	Use this setting to specify the direction of printing on the page: Portrait (vertical), or Landscape (horizontal). If you need to print close to the bottom of the page, click Rotate by 180°.
Printable area	Select Centered to position your printout at equal distances from the edges of the paper.

Fitting documents onto the page

You can fit the size of your document to the size of the paper you will print on.

For Windows

Use the Reduce/Enlarge options on the Paper menu.

Normal	Prints your document in normal size. The output paper size is the paper size you select on the Paper menu.
Fit to Page	Proportionally enlarges or reduces the size of your document to make it fit the paper size you select in the Paper Size list in the Reduce/Enlarge box.
Custom	Lets you define the percentage you want to enlarge or reduce an image. Click the arrows next to the Scale to box to select proportion from 10% to 400%.

For Macintosh

Open the Layout dialog box. To open the Layout dialog box, click Print on the File menu of your application, then click the Layout icon in the “Print dialog box (for Macintosh)”.

Selecting this setting proportionally enlarge or reduces the size of the image to make it fit the paper size you selected in the Paper Size list. To use this function, click On and select the paper size you loaded in the printer.

Using the Roll Paper Settings

Auto Rotate

The Auto Rotate function is effective only when the print data length is shorter than the printable width of the roll paper (24, 36, or 44 inches). The print data will automatically be turned 90 degrees to print crosswise, saving roll paper.

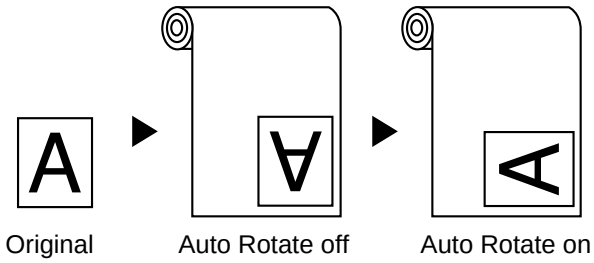

To enable Auto Rotate, select the Auto Rotate check box in the Roll Paper Settings box on the “Paper menu (for Windows)”, or the Auto Rotate check box in the “Page Setup dialog box (for Macintosh)”.

Auto Cut

When Auto Cut is selected the roll paper will be cut automatically after each print job.

To enable Auto Cut, select the Auto Cut check box in the Roll Paper Settings box on the “Paper menu (for Windows)” or the Auto Cut check box in the “Page Setup dialog box (for Macintosh)”.

Print Page Line

You can specify whether to print a page line on the right side, and also below the document for manual cutting.

To enable Print Page Line, select the Print Page Line check box in the Roll Paper Settings box on the “Paper menu (for Windows)”, or the Print Page Line check box in the “Page Setup dialog box (for Macintosh)”.

The Print Page Line operation changes according to the Auto Cut setting as shown.

Auto Cut	Print Page Line	Printer’s Operation
Selected	Selected	Prints page line on the right side only, and cuts paper automatically after the print job.
Selected	Not selected	Cuts paper automatically after the print job.
Not selected	Selected	Prints page lines on the right side and below the document.

Not selected	Not selected	Does not print page lines nor cut.

Note:
When Sheet is selected from the Paper Source list, the Roll Paper Settings (Auto Rotate, Auto Cut, and Print Page Line) are not available.

Using the Printer Utilities

EPSON printer utilities allow you to check the current printer status and do some printer maintenance from your screen.

EPSON Status Monitor 2/EPSON StatusMonitor

You can check occurrence of errors and the level of ink remaining for each ink cartridge, using the EPSON Status Monitor 2 or EPSON StatusMonitor utilities (depending on your system software).

Nozzle Check

To find out if nozzles are delivering ink properly, you can print a nozzle check pattern. If the nozzles are not delivering ink properly, missing dots will be evident in the print pattern. Six nozzles can be checked at a time.

Caution:
Before you start printing images, make sure that nozzle check pattern printing is complete. Otherwise, print quality may decline.

Head Cleaning

When printing quality declines, or when clogged nozzles are evident after the nozzle check, the print heads need to be cleaned. Use this utility to perform the head clean, then perform the Nozzle Check again, as repeat head cleaning may be necessary.

Print Head Alignment

Print head alignment is necessary when a misalignment of vertical lines appears in the head alignment test pattern, or when banding is evident in your printouts.

Printer and Option Information (Windows only)

This utility allows the printer driver to confirm printer configuration information. It also provides specific information regarding certain characteristics of the printer, such as the Printer ID. See “Using Printer and Option Information (Windows only)”.

Note:
Make sure that the printer is finished printing before performing the Nozzle Check, Head Cleaning, or Print Head Alignment utilities. Otherwise your printout may be marred.

Accessing the printer utilities for Windows

By accessing the printer software, the printer driver and utility menus appear in the printer software window. To use the printer utilities, click the Utility tab in the printer software window, then, click the button of the utility you want to use.

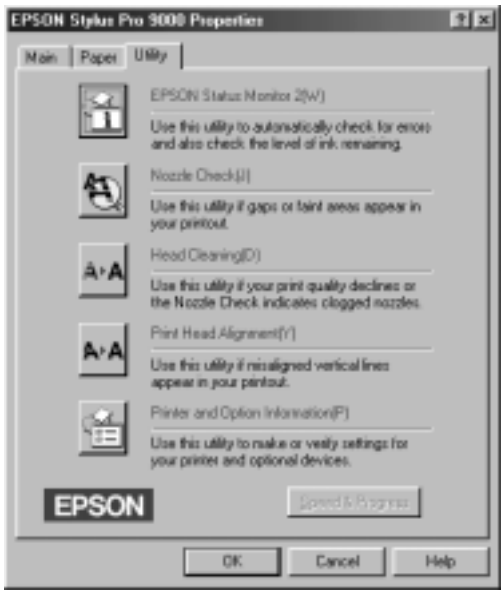

Note:

- *The letter in parentheses after the utility name indicates the shortcut key for that utility. Press* ALT *and the letter on the keyboard to open that utility.*

- *While printing is in progress, pressing any of the utility buttons, except the* EPSON Status Monitor 2 *button, may mar your printouts.*

Accessing the printer utilities for Macintosh

Open the Print dialog box or Page Setup dialog box and click the Utility icon to open the Utility dialog box. Then, click the button for the utility you want to use.

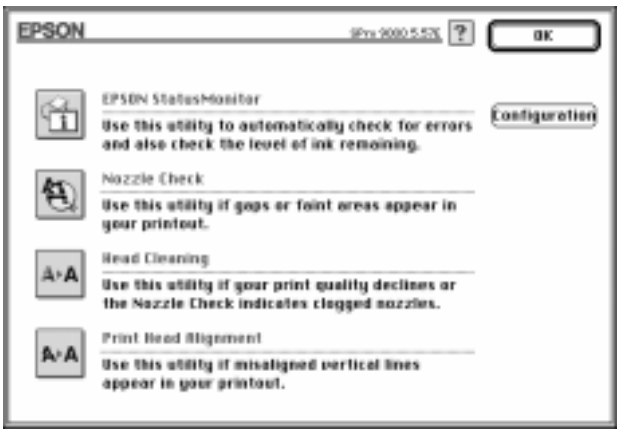

Note:
While printing is in progress, pressing any of the utility buttons, except the EPSON StatusMonitor *button, may mar your printouts.*

Using Printer and Option Information (Windows only)

Depending on the configuration of your system, the information displayed in the Printer and Option Information dialog box may be updated automatically, or may need to be updated manually.

If a message appears in the Current Settings window prompting you to enter settings, or if you change the printer's configuration, follow the steps below to make the necessary settings manually.

1. Load paper in the printer, then click the Settings Sheet button in the Printer and Option Information dialog box. Information on your printer and options is printed out similar to that below.

```
Printer ID : 48-48-50-52-50-52
```

2. Make sure the information in the utility matches the printed information. If not, adjust the information on the screen to match the printed information.

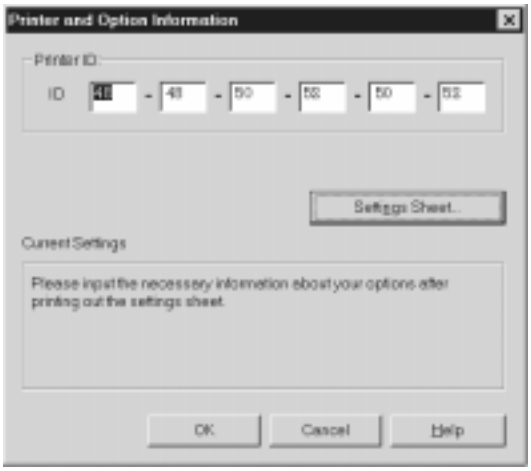

3. Click OK to save your settings and exit the menu.

Getting Information Through Online Help

Your printer software has an extensive online help feature, which provides instructions on printing, making printer driver settings, and using printer utilities.

Accessing help from Windows

Click the Start button, point to Programs and Epson (for Windows 95 and 98) or EPSON Printers (for Windows NT 4.0), and then click EPSON Stylus Pro 9000 Help. You see the help contents window.

Accessing help from your Windows application

By accessing the printer software, the printer driver and utility menus appear in the printer software window. Click the Help button at the bottom of the Main, Paper, and Utility menus for help related to the items on that menu.

Also you can get specific help related to any item on a menu by right-clicking the item, then clicking the What's This? prompt.

Accessing help from Macintosh

Open the Print dialog box or Page Setup dialog box and click the Help (marked with "?") icon to open the help contents dialog box.

You can access help in the printer driver and utility dialog boxes by clicking the Help icon or Help button.

Increasing the Print Speed (Windows only)

General tips

Printing color images using higher print quality settings takes longer than printing black-and-white images in standard print quality, as the volume of data in high quality color documents is much greater. For this reason, it is important to be selective in your use of color and print quality settings if you also require a faster print speed.

Even if your document requires the highest print quality and extensive use of color, it may still be possible to optimize the print speed by adjusting other printing conditions. Keep in mind that changing some conditions to increase the print speed may also lower print quality.

The following table shows the factors that inversely affect print speed and print quality (increasing one will decrease the other).

Print quality **Print speed**	**Lower** **Faster**	**Higher** **Slower**
Printer driver settings		
Print Quality	Normal - 360 dpi	SuperFine - 1440 dpi
High Speed	On	Off
Data characteristics		
Image size	Small	Large
Resolution	Low	High

The table below shows the factors related to print speed only.

Print speed	Faster	Slower
Printer driver settings		
Ink	Black	Color
Flip Horizontal*	Off	On
Data characteristics		
Variety of colors	Grayscale	Full color
Hardware resources		
System speed	Fast	Slow
HDD free space	Large	Small
Memory free space	Large	Small
Software status		
Running applications	One	Many
Virtual memory	Not in use	In use

*Varies depending on the printer driver and application software you are using.

Using Speed & Progress

You can make certain print speed settings in the Speed & Progress dialog box. To access this dialog box, click Speed & Progress on your printer software's Utility menu.

High Speed Copies

Prints multiple copies of your document faster.

Show Progress Meter

Displays printing progress while printing.

EPSON Printer Port (For Windows 95 and 98 only)

Speeds up the data transfer rate to EPSON printers.

Enable DMA transfer (For Windows 95 and 98 only)

If your computer has a parallel port which supports ECP mode, you can enable DMA transfer to help speed up printing. See your computer manual to determine if you have ECP support and DMA transfer.

To determine whether you need to enable DMA transfer, compare the message below the EPSON Printer Port setting to this table, and take the recommended action.

Message	Action
High Speed (DMA) Transfer enabled.	DMA transfer is already enabled. Click OK to close the dialog box.
For higher data transfer rates, use DMA Transfer.	Follow the steps below this table to enable DMA transfer.
(No message)	Your system's parallel port setting does not allow DMA transfer. However, if you change the parallel port setting to ECP or enhance using your computer's BIOS Setup program, you may be able to use DMA transfer. Consult your computer manual or computer maker for instructions. Once you change the parallel port setting, follow the steps below this table to enable DMA transfer. ***Note:*** ***Before you run the BIOS Setup program, uninstall the printer driver using Add/ Remove Programs in the Control Panel. After running the BIOS Setup program, reinstall the printer driver.***

If you need to enable DMA transfer, follow these steps.

1. Double-click the My Computer icon and double-click the Control Panel.

2. Double-click the System icon and click the Device Manager tab.

3. Double-click the Ports (COM & LPT) icon and double-click LPT1. If you have connected your printer to a port other than LPT1, double-click the appropriate port icon.

4. Click the Resources tab and select the Use automatic settings check box to deselect the Automatic Setting. Write down the Input/Output Range settings shown in the Resource settings box.

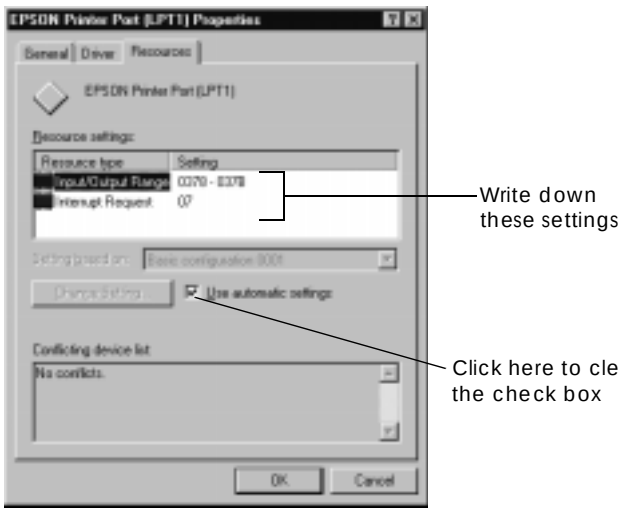

5. Select a basic configuration setting from the Setting based on list that uses the same Input/Output Range settings as those you wrote down in step 4, and make sure the Direct Memory Access channel and Interrupt Request numbers are allocated and displayed. Confirm also that the Conflicting device list box shows No conflicts.

6. Click OK to save the settings.

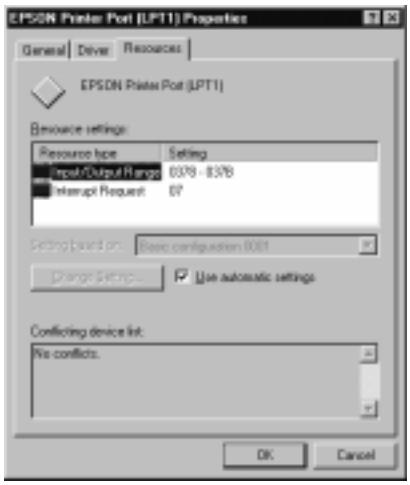

7. Reopen the Speed & Progress dialog box to verify whether DMA transfer has been enabled.

Note:
You may not be able to use DMA transfer on some computers even after you make the settings explained above. Consult your computer manufacturer for information on the DMA transfer capability of your computer.

Port Configuration (Windows NT 4.0 only)

Note:
Port settings for Windows NT 4.0 are complicated and should only be made by an experienced person with administrative privilege.

If your computer has a parallel port which supports ECP mode, you can make certain print speed settings in the Port Configuration dialog box. Before making settings, make sure that the ECP mode has been selected in your computer settings. For details about ECP mode, see your computer manual.

To access the Port Configuration dialog box, double-click the My Computer icon, double-click the Printer icon, right-click your printer icon, and select Properties. The printer driver window appears. Click the Port tab, then click the Configure Port button.

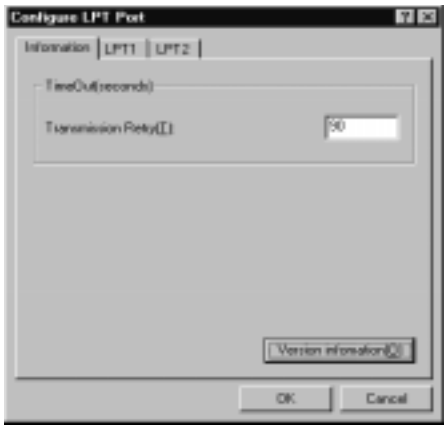

Click the LPT port tab for the port to which your printer is connected, then click the Port Configuration button.

Note:
If your printer is connected to LPT1, only the LPT1 tab is available.

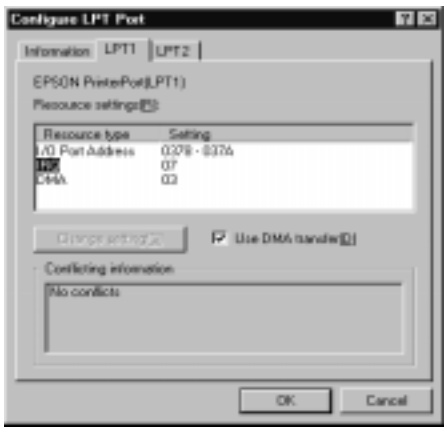

Resources settings (IRQ and DMA)

If you have connected your printer to LPT2 or LPT3, making IRQ and DMA settings here may help you speed up printing. Input the same configuration numbers for IRQ and DMA which you have made with your expansion board. See your computer manual to determine the settings for IRQ and DMA.

Use DMA transfer

Using DMA transfer to send print data to the computer may help you speed up printing. If the Use DMA Transfer check box appears dimmed, you first need to enable DMA transfer in your computer settings. For details, see your computer manual.

Checking Printer and Print Job Status for Windows

Using the Progress Meter

When you send a print job to the printer, the Progress Meter appears on your computer screen.

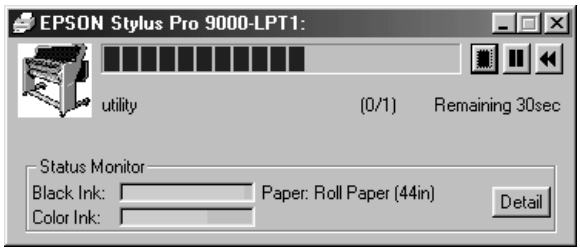

This meter shows the progress of the current print job and provides printer status information when bidirectional communication between the printer and computer is established.

Note:

- *If the Status Monitor 2 utility is not installed, the amount of ink remaining cannot be shown, nor can you access the* Detail *button to see more detailed information from the Printer Status window. To install this utility, see "Installing the Status Monitor 2".*

- *The Progress Meter does not appear when* Show Progress *is turned off in the Speed & Progress dialog box. See "Using Speed & Progress" for information.*

You can control printing from the Progress Meter using the stop, pause, and reprint buttons as explained below.

	Stop	Cancels printing
	Pause	Pauses printing until you press it again
	Reprint	Reprints the page currently being printed.

Using the EPSON Spool Manager

The EPSON Spool Manager is similar to Windows Print Manager. If it receives two or more print jobs at one time, it puts them in a line (or print queue) in the order received. When a print job reaches the top of the line, the EPSON Spool Manager sends the job to the printer.

For Windows 95 and 98

Click the EPSON Stylus Pro 9000 button after it appears on the taskbar. You can see the status and information on the print jobs in line. You can also cancel, pause and resume, or restart selected print jobs using the Spool Manager.

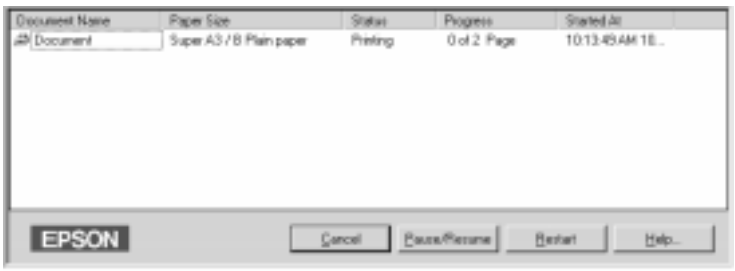

Using EPSON Status Monitor 2

If you installed the Status Monitor 2 utility, you can get detailed information on the current status of the printer.

Note:

- *If you have not installed the Status Monitor and want to do so, see "Installing the Status Monitor 2".*
- *Before using the Status Monitor, be sure to read the README file located in the EPSON Status Monitor 2 folder in the Epson folder on your hard drive.*

Installing the Status Monitor 2

To use Status Monitor 2, you need to install the software as described below:

Note:
If you installed Status Monitor 2 when you installed the printer software, you do not need to reinstall it.

1. Make sure Windows is running. Insert the printer software CD-ROM in the CD-ROM drive. (For printer software floppy disk users, insert the floppy disk into a disk drive.)
2. If a dialog box appears, click Quit.
3. Click Start, and select Run.
4. Type D:\STM2\SETUP. If the CD-ROM drive has a drive letter other than "D" or if you are using the floppy disk version, substitute the appropriate letter (for example, A:\SETUP).
5. Click OK, then follow the instructions on the screen.

Note:
The following dialog box may appear. If your EPSON Stylus Pro 9000 is connected directly to your computer, select the Monitor local printers *check box. If it is connected through a network, select the* Monitor Windows shared printers *check box. Then click* Next.

Accessing EPSON Status Monitor 2

There are two ways to access EPSON Status Monitor 2:

- Double-click the printer-shaped background monitoring icon on the taskbar at the bottom of your computer screen.

  Note:
  You must restart your computer after installing EPSON Status Monitor 2 to view the background monitoring icon.

- Click Start, point to Programs, click Epson, and then click EPSON Status Monitor 2.

You see the Status Monitor 2 window:

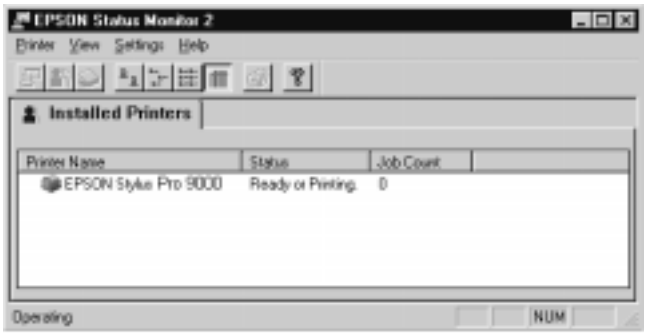

The EPSON Status Monitor 2 window displays the following information:

Printer icons	The color of the printer icon indicates the current printer status. Green: Ready. Yellow: Maintenance is necessary. Red: Error has occurred Dimmed: Communication problem between Status Monitor 2 and printer.
Printer Name	The name of the EPSON printer connected directly to your computer appears in this column.
Status	Brief messages appear regarding the current status of the printer.
Job Count	Shows the number of print jobs in queue. ***Note:*** Select Job Status on the Printer menu or click the Job Status icon on the tool bar, for more information.

Note:

❏ *You can add or delete printers from the list. To save computer memory, delete printers you do not need to monitor. (This does not remove the printer driver from your computer.) Choose* Add Printer *or* Delete Printer *on the Settings menu.*

- *You can rearrange the order of the printers in the list. Click the* Printer Name, Status, *or* Job Count *title bar to change the order of the printers.*

- *You can control the contents of the Status Monitor 2 window using the View menu. See the Status Monitor's online help.*

Checking printer status

To get more detailed information, you can access the Printer Status window by double-clicking the printer name, by selecting the printer and then choosing Printer Status on the Printer menu, or by selecting the printer and then clicking the Printer Status icon on the tool bar.

The Printer Status window appears as shown below:

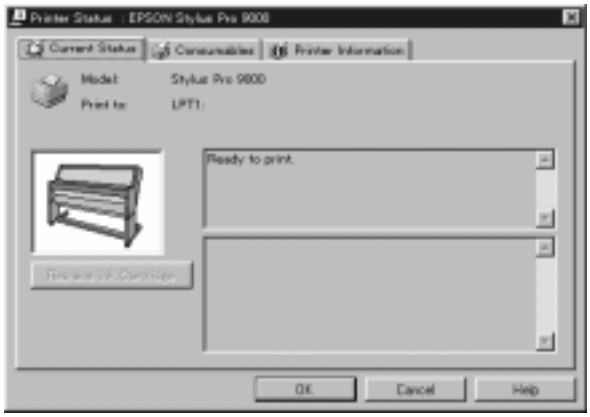

Note:
You can also access the Printer Status window from the Status Alert dialog box or the EPSON Status Monitor 2 utility. See "Making monitoring preference settings" for information on the Status Alert dialog box.

You can open the three menus described below by clicking the tabs at the top of the Printer Status window.

Current Status menu

Provides you with detailed printer status information, a graphic display, and status messages. If a printer error occurs, troubleshooting tips appear in the bottom message box. When ink runs low, clicking the Replace Ink Cartridge button displays cartridge replacement instructions.

Consumables menu

Provides you with detailed information on the amount of ink remaining.

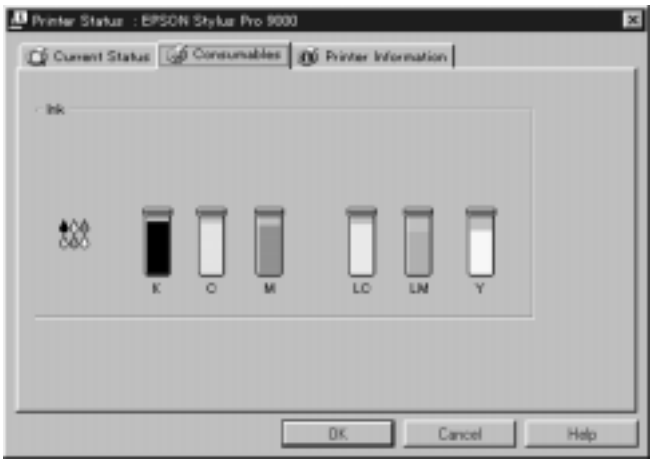

Printer Information menu

Provides you with information on network connections and other printer resources (for printers connected over a network). For details, see the Status Monitor's online help.

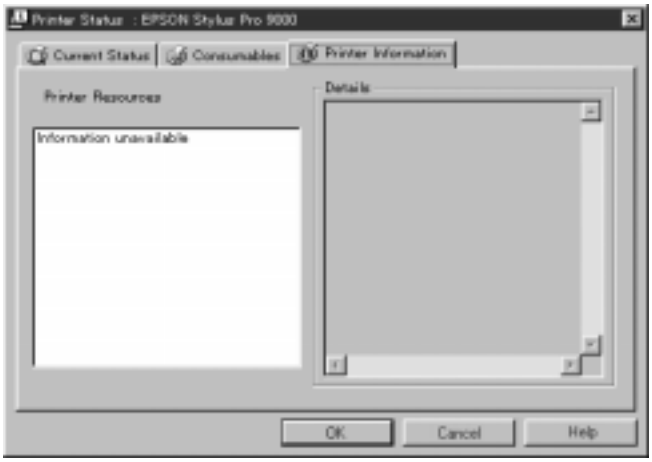

Making monitoring preference settings

The Monitoring Preferences dialog box allows you to turn on the background monitoring feature and specify the monitoring interval (length of time between status information updates) for the selected printer.

1. Make sure Status Monitor 2 is active. (It is active if a printer-shaped icon appears on the taskbar at the bottom of your computer screen.) If the Status Monitor is inactive, open the EPSON Status Monitor 2 window from Start, as described in "Accessing EPSON Status Monitor 2". Then point to Background Monitoring on the Settings menu and click Monitor from restart or Monitor now.

   Note:
   The Background Monitoring and Status Alert settings are not available while the Status Monitor is inactive.

2. Select the printer you want to monitor from the Installed Printers list, and then click Monitoring Preferences on the Settings menu. The dialog box below appears.

The following settings are available:

❑ Monitoring Interval

You can adjust the monitoring interval by dragging the slider.

Note:
Setting a short monitoring interval may slow down some applications.

❑ Background Monitoring

Select this check box if you want the Status Alert dialog box to appear automatically and inform you of the printer status while you are using some application programs. Use the Status Alert options to select when you want the Alert dialog box to appear.

❑ Status Alert

Select the check boxes to specify when you want the Status Alert dialog box to appear.

3. Click OK to save your settings.

Note:
If you want the Status Alert dialog box to appear in front of other windows on the desktop, right-click the background monitoring icon and choose Show on Top.

Checking Printer and Print Job Status for Macintosh

Using the EPSON StatusMonitor

The StatusMonitor utility regularly monitors the printer status. If a printer error is detected, you will be informed with an error message. You can also use this utility to check ink levels before printing.

To use the StatusMonitor, click the EPSON Status Monitor button in the Utility dialog box. The following dialog box appears:

To access the Utility dialog box, see "Accessing the printer utilities for Macintosh".

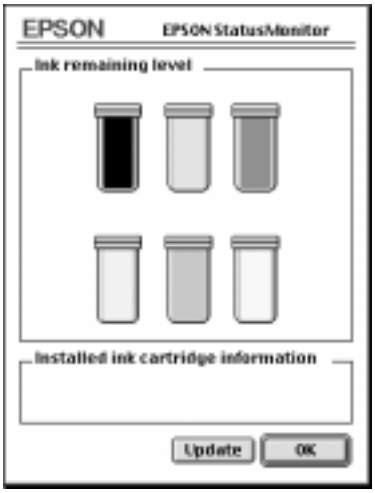

Note:
Installed ink cartridge information is not available.

StatusMonitor informs you of the amount of ink remaining as of the time the StatusMonitor was opened. To update ink-level information, click the Update button.

Making Configuration Settings

You can select the way the StatusMonitor utility monitors your printer, and the way you will be notified of information. Click the Configuration button in the Utility dialog box. (To access the Utility dialog box, see “Accessing the printer utilities for Macintosh”.) The Configuration Settings dialog box appears as below.

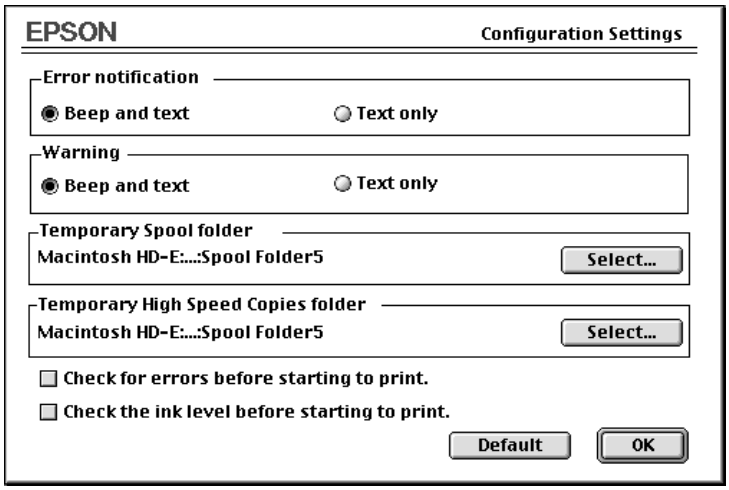

The options in this dialog box allow you to make the following settings:

Error notification	Choose how the StatusMonitor notifies you in case of an error.
Warning	Choose how the StatusMonitor notifies you if a warning message becomes necessary.
Temporary Spool folder	Choose the folder for temporary spooling of print data.
Temporary High Speed Copies folder	Choose the folders for multiple-copy print data storage.
Check for errors before starting to print.	Select this check box if you want to check for errors before starting to print.

Check the ink level before starting to print.	Select this check box if you want to check the ink level before starting to print.

Controlling Background Printing

After you send a print job to the printer, you can use the EPSON Monitor3 utility to check on, control, or cancel print jobs that are queued for printing. This utility also shows the status of the job currently being printed.

Using EPSON Monitor3

To use EPSON Monitor3, you must first turn on Background Printing in the Chooser or in the Background Printing dialog box. Then, after sending a print job to the printer, select EPSON Monitor3 from the Application menu at the right end of the menu bar. This opens a dialog box the same or similar to the one below.

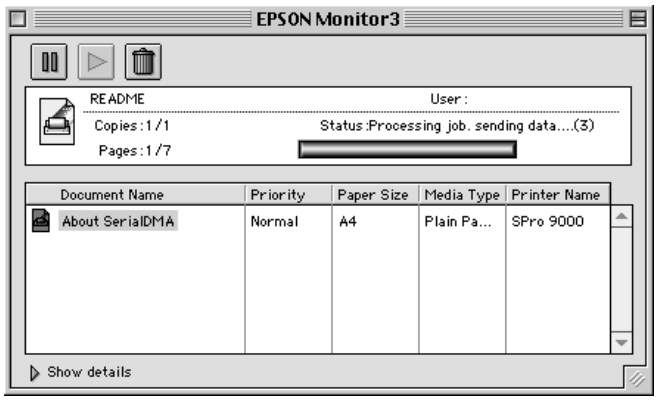

Note:
You can also open EPSON Monitor3 by double-clicking the EPSON Monitor3 *icon in the Extensions folder.*

Use these buttons to pause, resume, and cancel printing for documents selected in the dialog box.

	Pause	Pauses printing and moves the document to the end of the print queue
	Resume	Resumes printing from the current page
	Cancel	Cancels printing and deletes the document from the print queue

If you click the Show details arrow, an extension similar to the one below appears at the bottom of the EPSON Monitor3 dialog box. The extended dialog box displays detailed information on a selected document's printer driver settings.

Changing print job priority

To change the priority of print jobs in a print queue, follow the steps below.

Note:
You can also change the priority of print jobs that had print times previously set in the printer driver's Background Printing dialog box.

1. Click the Show details arrow at the bottom of the EPSON Monitor3 dialog box, then click a document name in the Document Name box. You will see an extended dialog box the same or similar to the one below.

2. Select Urgent, Normal, Hold, or Print Time from the Priority list.

   If you select Print Time, a dialog box will appear where you can specify the date and time that you want to print the document.

Uninstalling the Printer Software (Windows only)

Follow the instructions below to uninstall the EPSON printer driver and utilities for Windows.

1. Double-click the My Computer icon then double-click the Control Panel.
2. Double-click Add/Remove Programs.
3. Select EPSON Printer Software to uninstall the printer driver, or select EPSON Status Monitor 2 to uninstall the utility from the software list. Click Add/Remove. If you are uninstalling printer software, a dialog box appears and you need to select the printer icon for the driver you want to uninstall.
4. Follow the instructions on the screen to uninstall the software.

Note:
Before uninstalling EPSON Status Monitor 2, make sure that the background monitoring feature is turned off.

Paper Handling

Notes for Special Media and Other Media

Although most types of coated paper will provide good printing results, printout quality varies depending on the paper quality and the manufacturer. Test the printout quality before purchasing large amounts of paper.

Caution:
Keep fingers off the printable surface of the media, as fingerprints may reduce printout quality. Whenever possible, use gloves to handle media.

EPSON special media

EPSON provides special media that can enrich the usage and expressive power of the printing results. When using EPSON special media, make sure the appropriate settings are made in the printer driver as described in “Printer Software”. For information on EPSON special media, see “EPSON special media”.

Note:

- *Use EPSON special media in a normal room environment (temperature and humidity) for best results.*
- *When loading EPSON special media, read the instruction sheets enclosed first.*

Storing EPSON special media

- Store unused media in the original plastic bag and outer package so as to avoid moisture problems.
- Avoid storing the media in places exposed to high temperature, humidity, or direct sunlight.

Using paper other than EPSON special media

When you use paper other than EPSON special media, or print using the RIP (Raster Images Processor), see the instructions included with the paper or RIP system, or contact your supplier for more information.

Using Roll Paper

Attaching the roll paper to the spindle

When installing the roll paper onto the spindle, follow the steps below. To remove roll paper or empty roll paper cores, see “Removing the roll paper from the spindle”.

1. Slide the movable flange off the end of the spindle.

2. Hold the roll paper so that the paper unwinds in the direction as shown below.

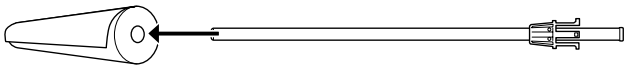

3. Slide the roll paper onto the spindle and onto the flange until it fixes into place.

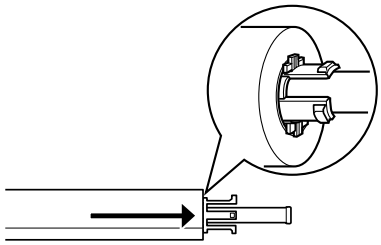

4. Slide the movable flange (removed in step 1) onto the spindle and into the end of the roll paper until it fixes into place.

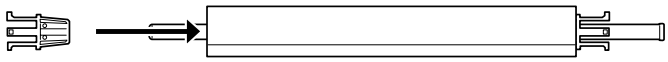

Removing the roll paper from the spindle

To remove the roll paper from the spindle, follow the steps below.

1. Place the paper loaded spindle down on a flat surface.

2. Slide the movable flange off the end of the spindle by tapping the same end of the spindle with your hand to loosen it. The flange is removed.

Caution:
To remove the movable flange from the spindle, do not hold the spindle vertically and tap the end on the floor; otherwise, damage may occur.

3. Remove the roll paper from the spindle.

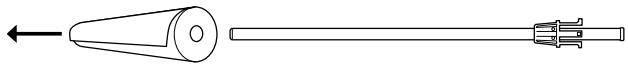

4. Attach other roll paper to the spindle (see “Attaching the roll paper to the spindle”), or if you do not want to attach other roll paper, slide the movable flange back onto the spindle.

Note:
Store unused roll paper in its original package. Put the roll paper into the plastic bag, and outer package so as to avoid moisture problems.

Attaching and removing the spindle from the printer

To attach the paper loaded spindle to the printer, follow the steps below. When you remove the spindle from the printer, clear the roll paper from the paper insertion slot, then reverse the steps below.

You can attach two roll paper spindles to the printer at once except if you are using the 3 inch Roll Media Spindle (C811031) in which case you can only attach one. This optional spindle is necessary if you wish to use the 3 inch diameter roll paper.

Note:
If two roll paper spindles are attached to the printer, keep the unused roll wound up using the roll paper belt, to avoid paper jams. See "Using the roll paper belt".

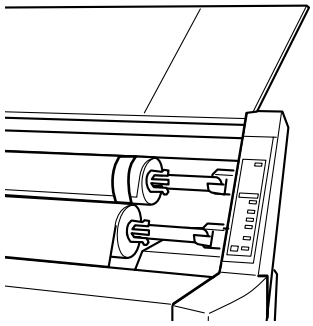

1. Open the roll paper cover.

2. Make sure that the movable flange is fixed into the end of the roll paper properly.

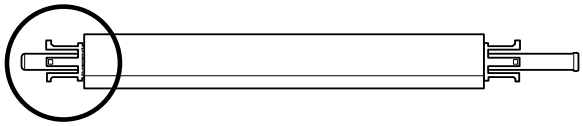

3. Hold the roll paper spindle so that the fixed flange is positioned to the right side.

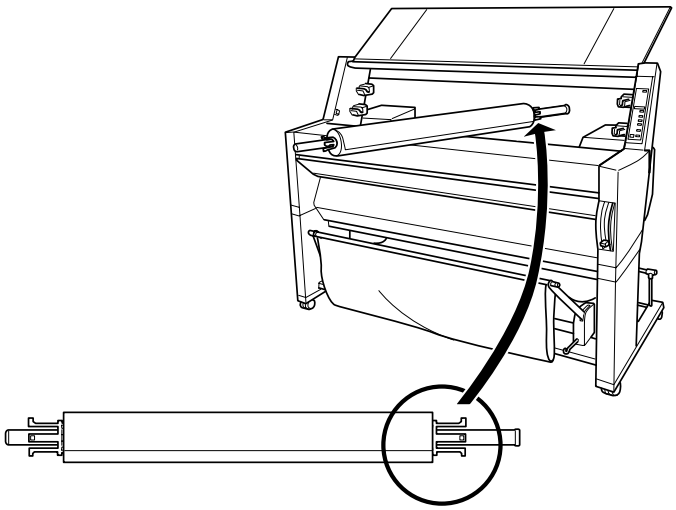

4. Place the right end of the spindle into the right mounting bracket inside the printer.

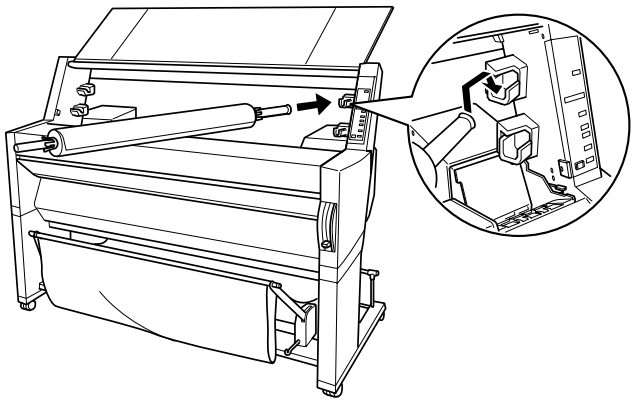

Note:
To mount the spindle correctly, match the color of the end of the spindle with the mounting bracket.

5. Place the left end of the spindle into the left mounting bracket inside the printer.

6. Close the roll paper cover or see “Loading the roll paper” following to load paper.

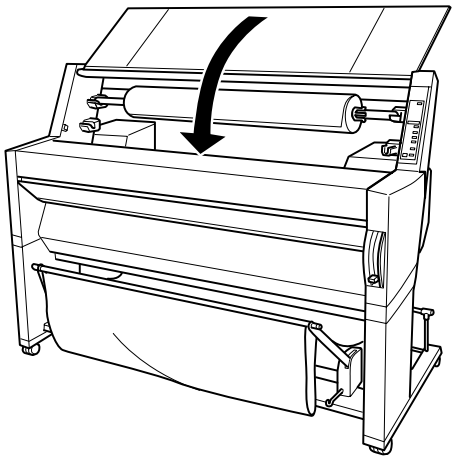

Loading the roll paper

To load roll paper, follow the steps below.

Note:
You may want to setup the paper basket before printing. See "Setting the Paper Basket". (In the illustrations below the paper basket is set to feed paper backwards.)

1. Open the roll paper cover. Make sure that the roll paper is attached to the printer properly.

   Note:
   If two roll paper spindles are attached to the printer, keep the unused roll wound up using the roll paper belt to avoid paper jams. See "Using the roll paper belt".

2. Make sure that the printer is on.

3. Press the Paper Source button repeatedly until the Roll Auto Cut light or Roll Cutter Off light is on.

   Caution:
   If you are loading thick roll paper, select Roll Cutter Off. Paper that is too thick may damage the paper cutter.

4. Make sure the Operate light or Pause light is not flashing, then pull the paper set lever all the way up. The Paper Out light turns on and “LOAD PAPER” appears on the LCD panel.

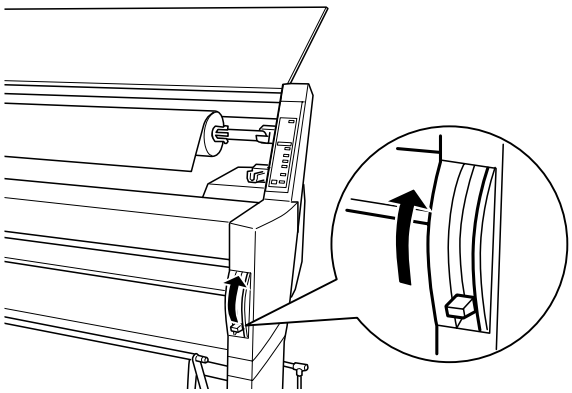

Caution:
Do not move the paper set lever up while the Operate light or Pause light is flashing. Otherwise, damage may occur.

5. Load the paper into the paper insertion slot.

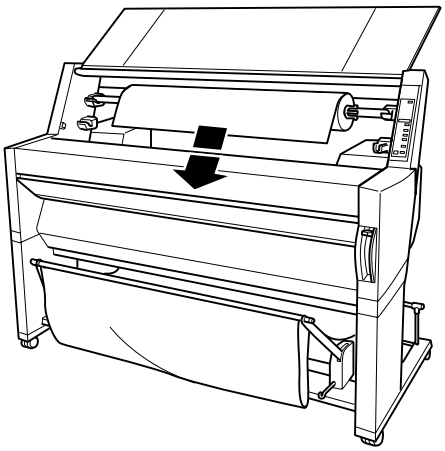

6. Pull the paper down through the paper insertion slot a small way.

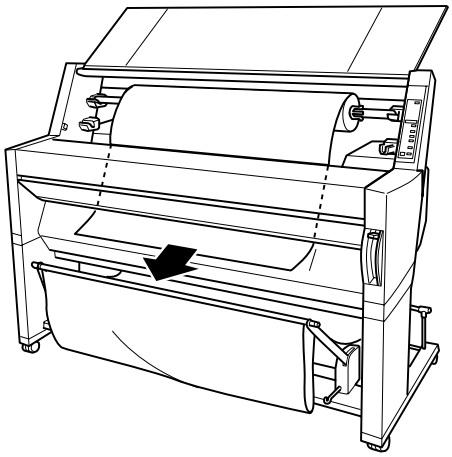

7. Roll back the roll paper to remove the slack. Make sure that the bottom edge of the paper is straight and in line with the rows of punch holes.

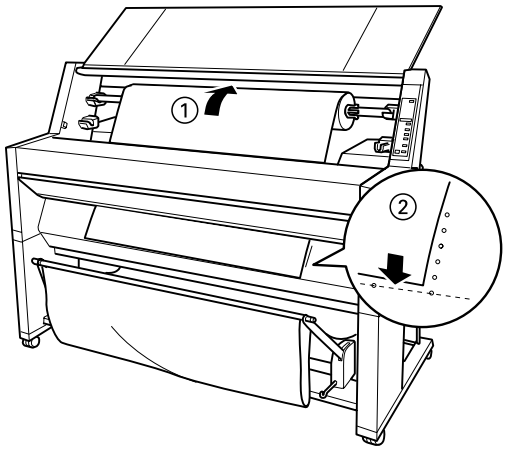

8. Push the paper set lever all the way down, then close the roll paper cover. “PRESS PAUSE BUTTON” appears.

Note:
If the Roll Auto Cut light is on, and the bottom edge of the roll paper was not cut properly after the previous print job, press the Cut/Eject *button to recut the edge.*

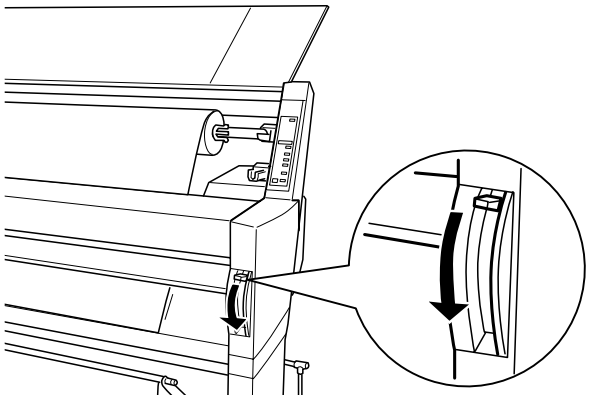

9. Press the Pause button.

   The print heads move and the paper feeds into the printing position automatically. ”READY” appears on the LCD panel.

   Note:
   Even if you do not press the Pause *button, the print heads move and paper feeds into the printing position automatically.* ”READY” *appears on the LCD panel.*

10. Make the printer driver settings (see “Accessing the Printer Software”), then send a print job from the computer. The printer starts printing.

    Note:
    Make sure that the Paper Source setting in the printer driver matches the paper loaded in the printer.

11. After you finish printing, you may need to cut the roll paper. See “Cutting roll paper or printing page lines”.

Using the roll paper belt

To keep the roll paper wound up, use the roll paper belt packed with your printer. When you attach two roll paper spindles, paper jams can be avoided.

Tap the end of the roll paper belt lightly on the roll paper. The belt will wrap itself around the roll paper.

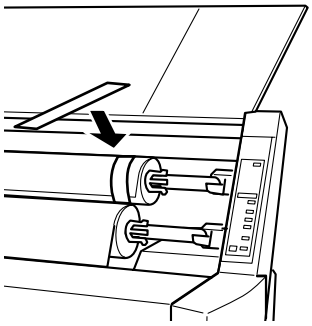

To remove the roll paper belt, simply unwrap it from around the paper. While you do not use the roll paper belt, keep it wound around the end of the spindle.

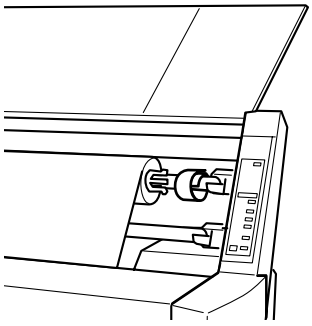

Cutting roll paper or printing page lines

When your print job is finished, the printer cuts the roll paper automatically or prints page lines around the document according to your settings. You can make these settings using the control panel or printer software.

Note:
Software usually overrides control panel settings. Use your software to make settings whenever possible.

Using the Auto Cut setting

When you want the roll paper to be cut automatically after your print job, use the Auto Cut setting. To make the Auto Cut setting using the Paper Source button on the control panel, see "Buttons". To use the printer software, see "Using the Roll Paper Settings".

Note:
When the printer cuts the paper, first the left part of the paper is cut, then the right, and finally the center. Never turn off the printer before the paper is cut completely.

Cutting the roll paper manually

To cut the roll paper when the Auto Cut setting is off, follow the steps below.

Cutting after the document is printed

1. Make sure the document is printed, then press the Paper Source button repeatedly until the Roll Auto Cut light is on.

2. Press the Cut/Eject button. The roll paper is cut.

Cutting the roll paper at other times

1. Press the Paper Feed button to position the paper in place for cutting.

2. Press the Paper Source button repeatedly until the Roll Auto Cut light is on.

3. Press the Cut/Eject button. The roll paper is cut.

Printing page lines

If you want to print continuously on roll paper first, then cut the page yourself after you finish printing, use the Print Page Line setting. To make the Print Page Line setting using the control panel, see “SelecType Settings”. To use the printer software, see “Using the Roll Paper Settings”.

Using Cut Sheet Media

Loading cut sheet media

To load cut sheet media, follow the steps below. To load thick paper (0.5 mm or thicker), see “Printing on thick paper (0.5 mm or thicker)”.

Note:
You may want to set the paper basket before printing. See “Setting the Paper Basket”. (In the illustrations below the paper basket is set to feed paper backwards.)

1. Make sure that the printer is on and the roll paper cover is closed.

2. Press the Paper Source button repeatedly until the Sheet light is on.

3. Make sure the Operate light or Pause light is not flashing, then pull the paper set lever all the way up. The Paper Out light turns on and ”LOAD PAPER” appears on the LCD panel.

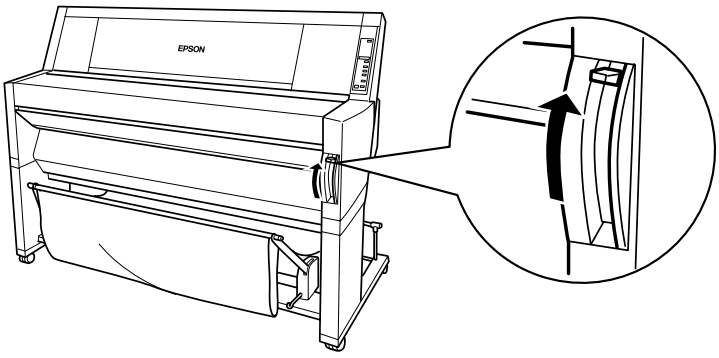

Caution:
Do not move the paper set lever up while the Operate light or Pause light is flashing. Otherwise, damage may occur.

4. Load the sheet into the paper insertion slot until it comes out below. Make sure that the right and bottom edges of the sheet are straight and in line with the rows of punch holes.

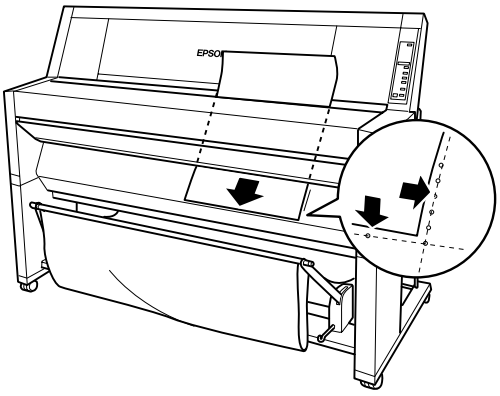

5. Push the paper set lever all the way down. “PRESS PAUSE BUTTON” appears on the LCD panel.

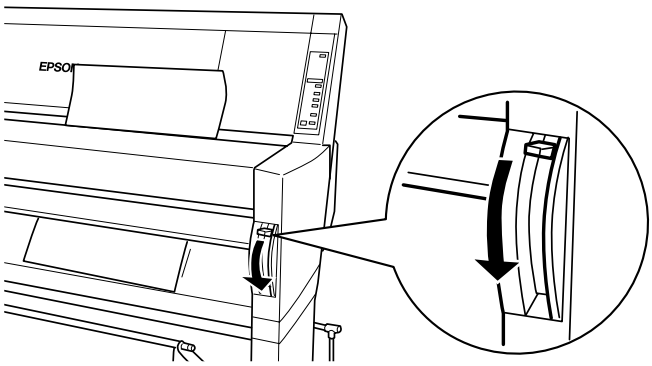

6. Press the Pause button.

   The print heads move and the sheet feeds into the printing position automatically. ”READY” appears on the LCD panel.

   Note:
   Even if you do not press the Pause *button, the print heads move and paper feeds into the printing position automatically.* ”READY” *appears on the LCD panel.*

7. Make the printer driver settings (see “Accessing the Printer Software”), then send a print job from the computer. The printer starts printing.

   Note:
   Make sure that the Paper Source setting in the printer driver matches the paper loaded in the printer.

8. When printing finishes, the printer supports the printed media, and ”PAPER OUT” is displayed. To remove the media, hold it while pulling the paper set lever all the way up. The paper can be removed from the printer.

Printing on thick paper (0.5 mm or thicker)

When you load thick cut sheets, such as cardboard, follow the steps below.

Note:

- ❏ *Do not load thick paper larger in size than B1 (728 × 1030 mm); otherwise, paper jams may occur.*
- ❏ *Always load B1 (728 × 1030 mm) sized thick paper long edge first. You may want to select the Landscape setting in your printer driver.*

1. Set the paper basket forward as described in “When feeding paper forward”.
2. Make sure that the printer is on.
3. Press the Paper Source button repeatedly until the Sheet light is on.
4. Make sure that the Operate light or Pause light is not flashing, then pull the paper set lever all the way up. The Paper Out light turns on and ”LOAD PAPER” appears on the LCD panel. Open the lower cover.

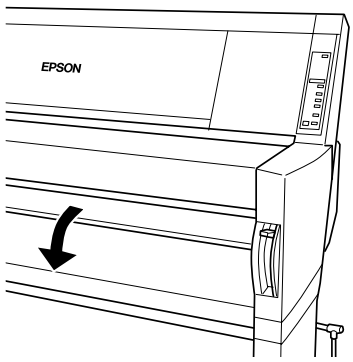

5. Load the sheet into the paper insertion slot so that the bottom edge of the paper rests behind the open lower cover. Make sure that the right edge is straight and in line with the vertical row of punch holes.

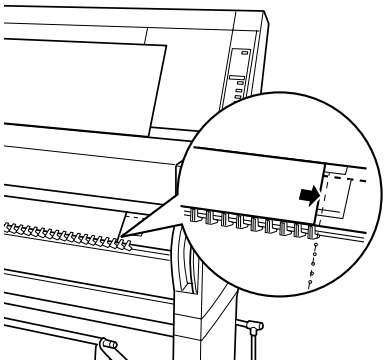

6. Push the paper set lever all the way down, then close the lower cover. ”PRESS PAUSE BUTTON” appears on the LCD panel.

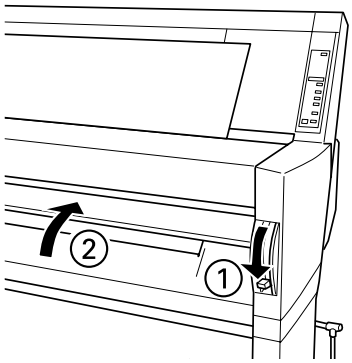

7. Press the Pause button. Then follow the same procedure as for other cut sheets.

Setting the Paper Basket

To avoid your printouts getting dirty or crinkled, set the paper basket as shown below. You can use the paper basket for both roll paper and cut sheet media.

Note:
When you print on thick paper, set the paper basket forward to avoid your printouts becoming damaged. See "When feeding paper forward" following.

When feeding paper forward

1. Fully pull out the paper basket hooks as shown, so that they rest on the floor.

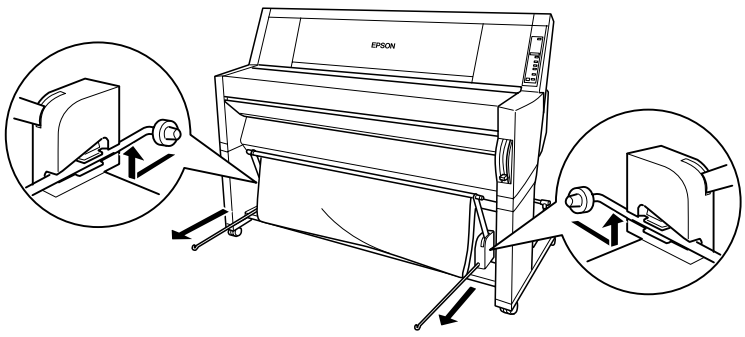

2. Take the two rods and place them infront of the basket hooks.

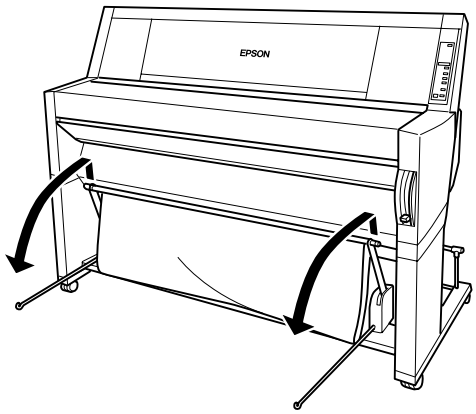

3. Hook the shorter rod on the ends of the basket hooks. The longer rod should rest on the floor under the basket hooks.

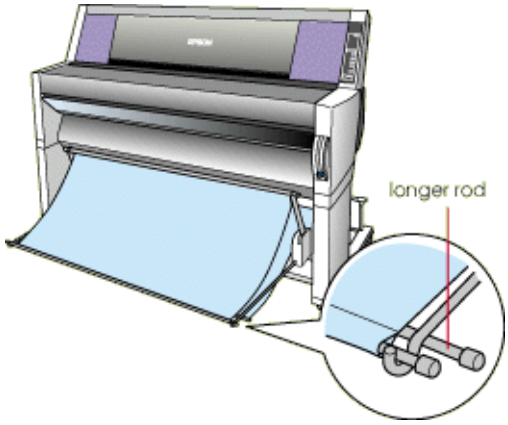

4. Push in the top of the paper basket so that the printout will be fed to the front.

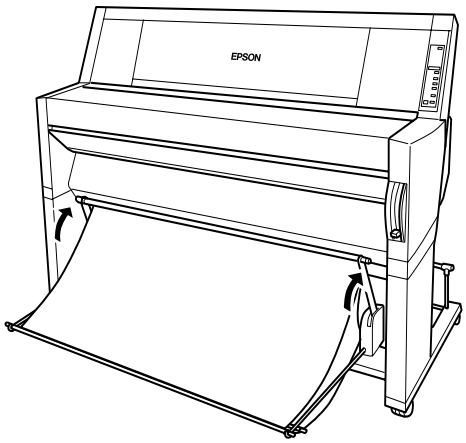

5. If necessary, extend the paper basket fabric out on the floor infront of the printer (for large print jobs).

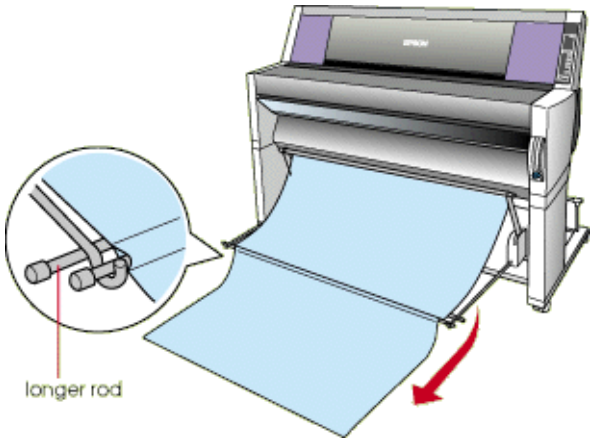

When feeding paper backward

Caution:
Always load B1 (728 × 1030 mm) size thick paper (0.5 mm or thicker) long edge first and feed the paper forward. Otherwise, damage to your printouts may occur.

1. Fit the ends of the 3 rods into the slots at the ends of the paper basket arms and push the paper basket hooks in.

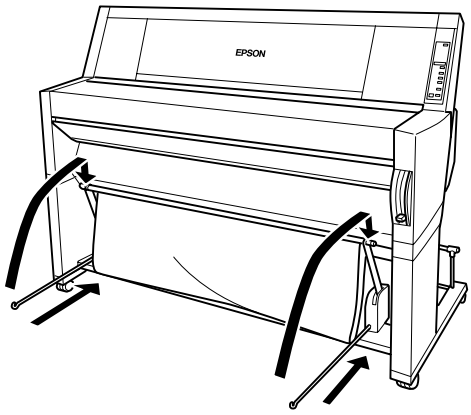

2. Pull out the top of the paper basket so that the printout will be fed to the back.

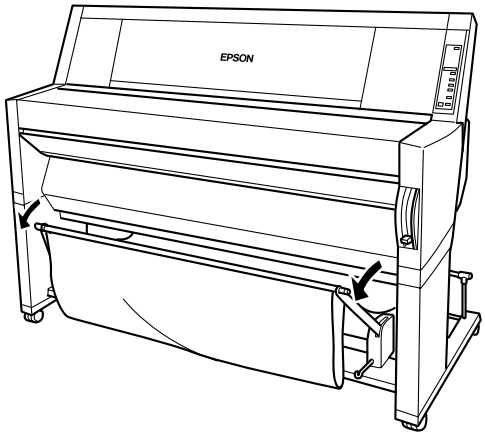

Maintenance and Transportation

Replacing Ink Cartridges

The printer's indicator lights tell you when to obtain a replacement ink cartridge by flashing when ink is low, and when to replace an empty ink cartridge by remaining on when ink is depleted. The LCD panel also displays "INK LOW" or "INK OUT".

Note:

- *Even if only one ink cartridge is empty, the printer cannot continue to print.*
- *If you remove an ink cartridge and then reinstall it, the printer cannot determine the correct level of ink remaining and the corresponding Ink Out light may not flash to warn you even when the cartridge is almost out of ink. Only install unused ink cartridges.*

EPSON recommends the use of genuine EPSON ink cartridges. Other products not manufactured by EPSON may cause damage to your printer not covered by EPSON's warranties. See "Ink cartridges".

To replace an ink cartridge, follow the steps below.

Caution:
Leave the old cartridge installed in the printer until you are ready to replace it with a new one.

1. Make sure the printer is on. Determine which cartridge needs to be replaced as indicated by the Ink Out light that is flashing or on.

2. Open the roll paper cover.

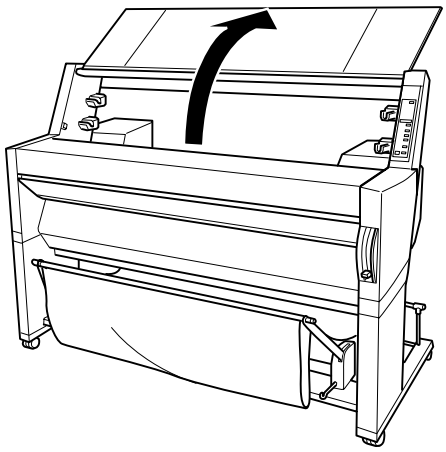

3. Push the lever down so it releases and opens the ink compartment cover to locate the cartridge that needs to be replaced. (The lever is raised.) ”INK COMPART. OPEN” appears on the LCD panel.

4. Pull the clamp of the slot containing the empty ink cartridge forwards.

5. Carefully pull the empty cartridge straight out of the printer.

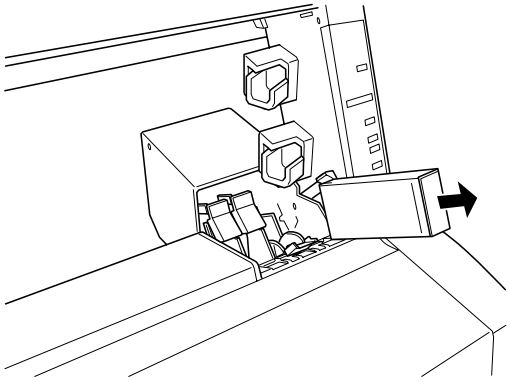

Warning:
If ink gets on your hands, wash them thoroughly with soap and water. If ink gets into your eyes, flush them immediately with water.

6. Make sure the replacement ink cartridge is the correct color, and remove it from the package.

7. Hold the ink cartridge with the arrow mark face-up and pointing to the rear of the printer, then insert the ink cartridge into the slot. Do not force the cartridge in further by hand.

Note:
There is a protection system against improper cartridge insertion. If you cannot insert the ink cartridge smoothly, the type of cartridge may be incorrect. Check the package and production code.

8. Push the cartridge clamp backwards. Make sure the corresponding Ink Out light goes off.

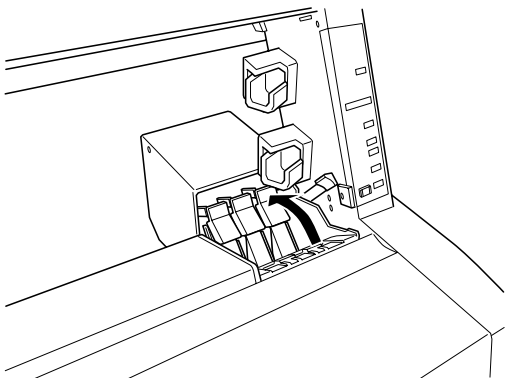

Note:
If the Ink Out light remains on, the ink cartridge may not be installed correctly. Remove the ink cartridge and then reinsert it as described above.

9. Close the ink compartment cover by pushing the lever down until it clicks into place. The printer returns to the previous status.

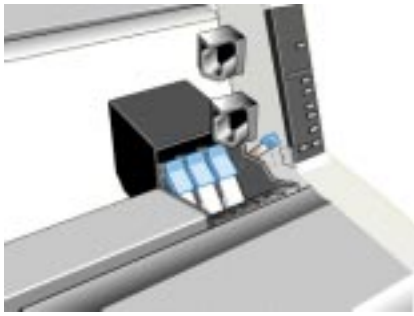

Replacing the Paper Cutter

When the paper cutter does not cut finely, it may be blunt and require replacement. To replace the paper cutter, you need to move the paper cutter holder using the control panel settings.

Paper Cutter Blade C815131

Warning:
Be careful not to cut yourself while replacing the paper cutter.

To replace the paper cutter, follow the steps below.

1. Make sure that the printer is on.

2. Press the SelecType button repeatedly until “CUTTER REPLACE MENU” appears on the LCD panel.

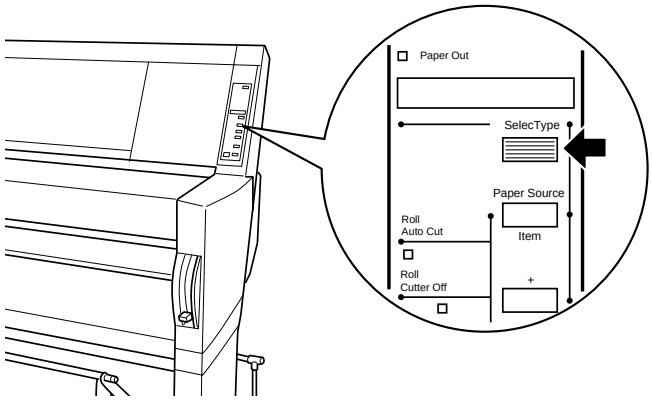

3. Press the Item button. “CUT. REPLACE = EXEC.” appears. Then press the Enter button. “WAIT” appears and the paper cutter holder moves to the replacement position.

Caution:
Never move the paper cutter holder by hand. Otherwise, damage to your printer may occur.

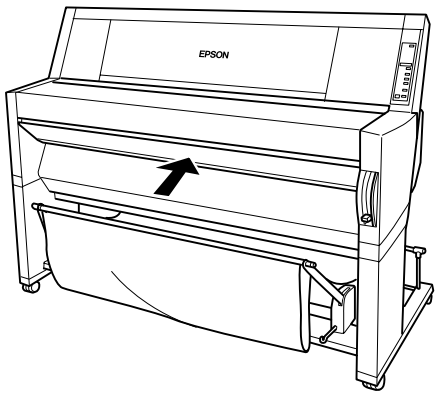

4. When the paper cutter holder stops at the replacement position, “OPEN LOWER COVER” appears. Open the lower cover.

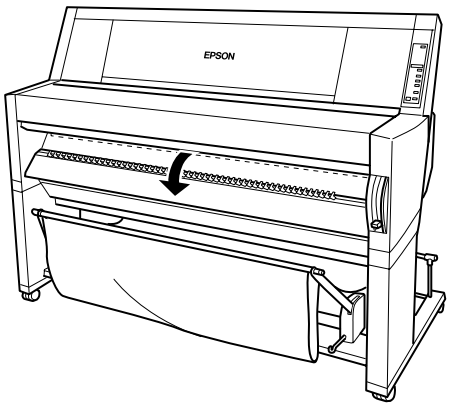

5. When “REPLACE CUTTER” appears on the LCD panel, push in the side pin while turning the paper cutter cover to the right to open the casing.

6. Slowly take your finger off the side pin. The paper cutter raises so it can be removed.

Note:
Be careful not to let the cutter or the spring coil pop out of the casing.

7. Carefully remove the old cutter from the printer.

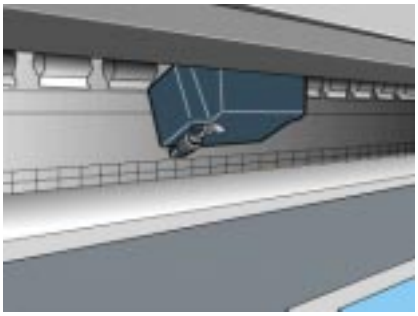

8. Remove the new paper cutter from its package.
9. Make sure the spring coil is inside the cutter holder and if necessary, reinstall the coil.
10. Fully insert the new cutter into the paper cutter holder in the direction as shown below.

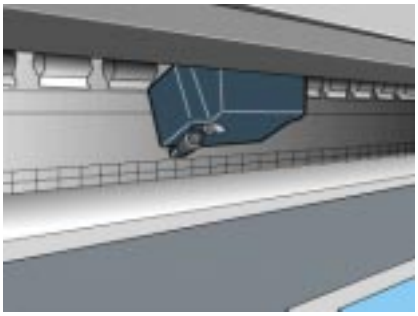

11. Push in the side pin while turning the paper cutter cover to the left to close the casing.

12. Make sure that ”CLOSE LOWER COVER” is displayed, then close the lower cover. The cutter holder moves to the home (far right) position.

13. Wait until ”READY” appears on the LCD panel. Paper cutter replacement is complete.

Cleaning the Printer

To keep your printer operation at its best, you should clean it thoroughly several times a year.

1. Make sure the printer is turned off and all the lights are off. Then unplug the power cord.
2. Open the roll paper cover and remove the roll paper spindles. Also remove any sheet media from the printer.
3. Make sure that the ink cartridge compartment is closed. Then use a soft brush to carefully clean away any dust or dirt inside the printer unit.
4. Close the roll paper cover.
5. Open the lower cover and use a soft brush to carefully clean away any dust or dirt inside the lower cover. Then close the cover.
6. Remove the paper basket. Then clean away any dust or dirt around the leg assembly using a soft brush.
7. If the outer case is dirty, clean it with a soft, clean cloth dampened with mild detergent. Keep the ink cartridge compartment closed to prevent water from getting inside.
8. If the inside of the printer accidentally gets soiled with ink, wipe it off with a damp cloth.
9. To wash the paper basket, remove the shafts from the basket, then wash with mild detergent.

Warning:
Be careful not to touch the gears inside the printer.

Caution:

- *Never use alcohol or thinners to clean the printer; these chemicals can damage the components as well as the case.*
- *Be careful not to get water on the printer mechanism or electronic components.*
- *Do not use a hard or abrasive brush.*
- *Do not spray the inside of the printer with lubricants; unsuitable oils can damage the mechanism. Contact your dealer or a qualified service person if lubrication is needed.*

Transporting the Printer

A long distance

When you need to transport your printer a long distance, the printer should be repacked using the original box and packing materials. Contact your dealer for assistance.

A short distance

When you need to move the printer a short distance, follow the steps below:

1. First turn off the printer and make sure the print heads are in the home (far right) position. If not, turn the printer back on, wait until the print heads move to the home position, then turn off the printer.

2. Remove the following parts:

   Note:
   If you remove an ink cartridge and then reinstall it, the printer cannot determine the correct level of ink remaining and the corresponding Ink Out light may not flash to warn you even when the cartridge is almost out of ink. After transporting the printer, install unused ink cartridges.

   - ❏ Ink cartridges
   - ❏ Power cord
   - ❏ Interface cable
   - ❏ Paper basket
   - ❏ Roll paper spindles
   - ❏ Roll and cut sheet media
   - ❏ Optional Auto Take-Up Reel Unit (if installed)

3. Make sure that the ink cartridge clamps are in the upright position (closed), and leaving the ink compartment cover open, fix the cover and the cartridge clamps in place using tape.

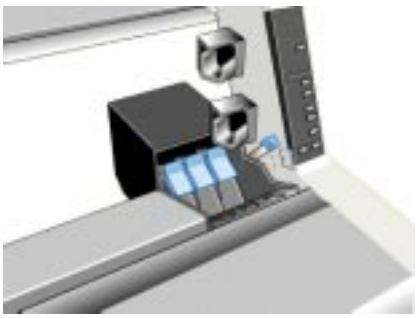

4. Close the ink valve locks on each side of the printer.

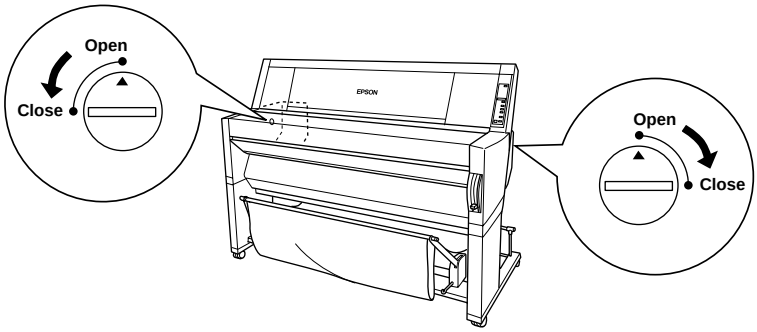

5. Remove the left and right side joint cover plates by spreading the ends and pulling outwards, and keep them in a safe place.

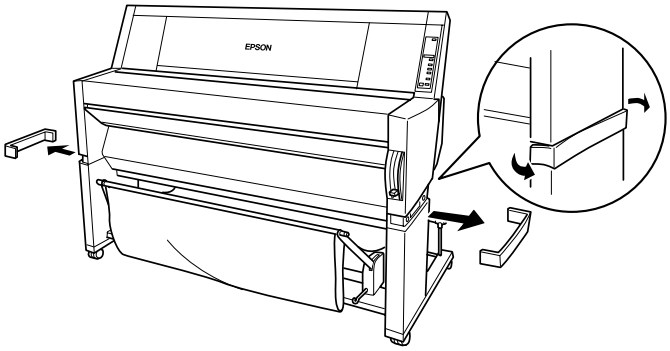

6. While holding the printer unit, remove the screws from the left and right sides, and keep them in a safe place.

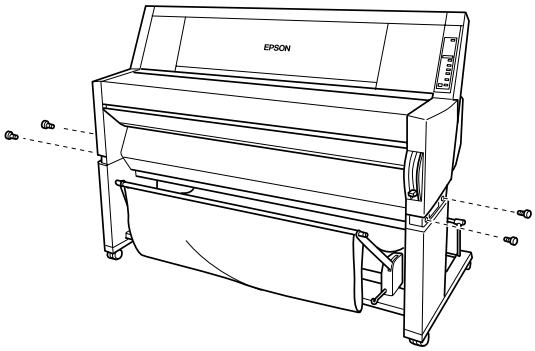

7. Have four people lift the printer unit off of the leg assembly, using the hand grips. The printer unit weighs approximately 100 kg (220 lb) and should be lifted carefully.

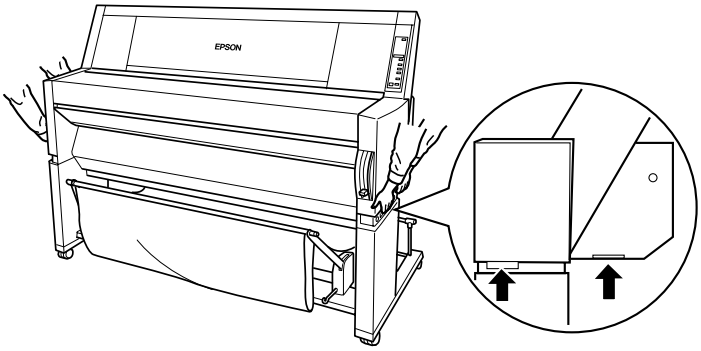

8. Move the printer horizontally.

When you set up the printer after transporting, see “Setting up the printer after transporting it”. Before you use the printer after transporting, you may need to perform a nozzle check and realign the print heads. See your *Startup Guide.*

To move the printer using casters

When you want to transport the printer a very short distance such as within the same room, you can slide the printer on its casters.

Caution:
Do not slide the printer on angled or uneven surfaces.

1. Make sure that the power cord, interface cable, roll paper spindles and sheet media are removed, and the roll paper cover and lower cover are closed.

   Note:
   If you only need to transport your printer a very short distance using the casters, you do not need to remove the ink cartridges.

2. Release the front casters and retract the stabilizer knobs.

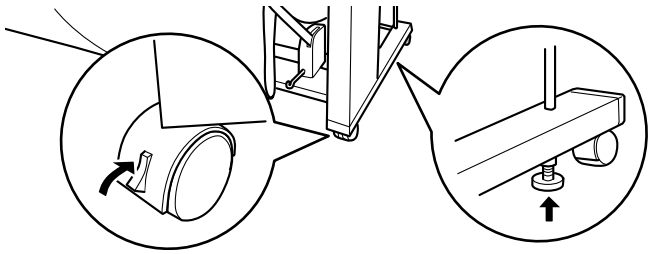

3. Move the printer to the place of use carefully. Relock the casters and extend the stabilizer knobs after moving.

Setting up the printer after transporting it

The steps you need to take to set up the printer after transporting it are almost identical to the steps carried out the first time you set up the printer. When you set up the printer again, see the *Assembly and Setup Instructions*, and note the following points:

- ❑ Do not forget to open the side ink valve locks. The printer cannot print while they are closed.
- ❑ Do not forget to remove any protective material (such as tape from the ink cartridge clamps).
- ❑ The first time you start printing after transporting the printer, the print head nozzles may be clogged. EPSON recommends you perform a nozzle check and clean the print heads, and also realign the print heads to ensure print quality. See your *Startup Guide.*
- ❑ EPSON recommends installing new ink cartridges after transporting the printer. If you reinstall the cartridges you removed before transporting, the printer cannot determine the correct level of remaining ink and the Ink Out lights may not flash to warn you when a cartridge is almost out of ink.

Troubleshooting

Printer Stops Printing Unexpectedly

Head cleaning, ink charging, or ink drying is in progress

Check to see if the Pause light is flashing. If so, the printer is in the process of head cleaning, ink charging or ink drying. During head cleaning and ink charging, “WAIT” is displayed on the LCD panel. During ink drying, “INK DRY nn MIN” is displayed (nn is the number of remaining minutes). Wait until the printer resumes printing.

An error has occurred

Many common printer problems can be identified by the LCD messages and lights on your printer’s control panel.

If your printer stops working, use the table below to diagnose the problem, then follow the recommended corrective measures. For other messages not included in the table, see “Status messages”.

= On, = Flashing, = Off

Message and Light	Problem	Solution
PAPER OUT Paper Out	No paper is loaded in the printer.	Load paper in the printer.
	Paper ran out.	Remove any printouts or paper remaining in the printer. Load more paper. If this message appears during a print job, reset the printer by pressing the Pause button for 3 seconds, then load paper and send the job again.
LOAD ROLL PAPER LOAD SHEET PAPER Paper Out	The paper source setting in the printer driver is different from the control panel.	Make sure the paper source setting in the printer driver is the same as the control panel.
PAPER JAM Paper Out	Paper is jammed in the printer.	Remove the jammed paper. See also “Paper Feed or Paper Jam Problems Occur Frequently”.
COVER OPEN	Lower cover is open.	Close the lower cover.
PAPER NOT CUT Paper Out	Roll paper was not cut.	Cut the paper manually, then remove the cut paper from the printer. When RELOAD PAPER is displayed, load paper.
	Cut paper did not fall off.	Remove the cut paper from the printer. When RELOAD PAPER is displayed, load paper.

PAPER NOT STRAIGHT Paper Out	Slippage occurred and paper was fed at an angle.	Reload paper. See “Paper Feed or Paper Jam Problems Occur Frequently”.
RELOAD PAPER Paper Out	Paper could not be reversed into the printing position.	Remove then reload the paper so that the right and bottom edges are straight and in line with the rows of punch holes on the printer. See "Paper Handling".
	Paper is set out of the printable area.	
	Paper is set out of the horizontal cutting area.	
	Paper is not fully ejected.	Cut the paper at the paper insertion slot, then reload paper.
	PAPER NOT CUT error was cleared.	Reload paper.
PUSH LEVER DOWN Paper Out	Paper set lever was released during the printing process or another operation.	Push the paper set lever down. Start printing again from the beginning for best results.
REMOVE PAPER Paper Out	Paper set is too thick for head cleaning.	Push the paper set lever down to remove the paper. Head cleaning automatically starts. After cleaning, when ”PAPER OUT” is displayed, reload paper.
UNABLE TO PRINT	While an error occurs, or the ink compartment cover is open, you try to print a test pattern (nozzle check, status check, head alignment, or paper thickness pattern) from the SelecType settings.	After 3 seconds the message disappears. Press the Pause button to exit the SelecType mode. When an error or status message appears again, clear and perform printing a test pattern again.

INK OUT Y/LM/M/LC/C/K	Ink cartridge(s) is (are) empty.	Replace the ink cartridge(s) as indicated by the lights. See “Replacing Ink Cartridges”.
NO INK CARTRIDGE Y/LM/M/LC/C/K	Ink cartridge(s) is (are) not installed.	Install ink cartridge(s) as indicated by the lights. See “Replacing Ink Cartridges”.
WRONG CARTRIDGE Y/LM/M/LC/C/K	Wrong ink cartridge(s) is (are) installed.	Use the correct ink cartridge(s).
OPTION I/F ERROR	Wrong I/F card is installed.	Install the correct I/F card after turning off the power.
SERVICE REQ.nnnnnnnn All lights Flashing	A fatal error has occurred.	Note the error number “nnnnnnnn” and contact your dealer. See “Contacting Customer Support”.

The Printer does not Turn on or Stay on

When the Operate light does not come on and mechanism initialization does not start (even when the Power button is pressed to turn on the printer), try the solutions listed for the problem.

- ❑ Turn off the power and make sure the power cord is securely plugged into the printer.
- ❑ Make sure your outlet works and is not controlled by a wall switch or timer.
- ❑ Make sure the supplied voltage to the printer matches the rating voltage labeled on the printer. If not, turn off the power and unplug the power cord immediately. Contact EPSON for assistance. See “Contacting Customer Support”.

Caution:
If the supplied voltage and rating voltage do not match, do not plug the printer back in again, as damage may occur.

The Printer Prints Nothing

The printer is not correctly connected to the computer

Try one or more of these solutions:

- Turn off the printer and computer. Make sure the printer's interface cable is securely plugged into the correct terminal of the computer.
- Make sure the interface cable specifications match the specifications for the printer and computer.
- Make sure the interface cable is directly connected to the computer without passing through any device, such as a printer switching device, or extension cable.
- If you are using Windows NT 4.0, try uninstalling the EPSON Printer Port. Click Start, point to Programs and EPSON Printers, then click EPSON Printer Port Uninstall. Follow the messages on the screen.

Your EPSON printer is not selected as the default printer

Install the printer driver if it is not installed already, and follow the steps below to select your EPSON printer as the default printer.

For Windows:

1. Click Start, point to Settings and select Printers.
2. Right-click EPSON Stylus Pro 9000 in the Printers window.

3. Select Set As Default, then close the Printers window.

For Macintosh:

1. Click Apple menu and select Chooser. If the EPSON Stylus Pro 9000 printer icon can be seen, the printer driver is correctly installed.

2. Make sure the EPSON Stylus Pro 9000 printer is selected for the printer port.

Printer port setting does not match the printer connection port (Windows)

If you use Windows, select the printer port as described below.

1. Click Start, point to Settings and select Printers.

2. Right-click EPSON Stylus Pro 9000 in the Printers window, then select Properties.

3. Click the Details tab.

4. Make sure that your printer driver is selected in the "Print using the following driver" list. Then select the port to which your printer is connected in the "Print to the following port" list.

The printer driver doesn't have enough available memory (Macintosh)

To increase the available memory in your Macintosh, select Control Panel from the Apple menu and double-click the Memory icon. You can increase the size of RAM cache or virtual memory to increase total available memory. Also quit all unnecessary applications.

The printer sounds like it is printing, but nothing prints

Try one or more of these solutions:

- ❑ Make sure the ink valve locks on each side of the printer are open. Ink cannot flow when these are closed. See “Transporting the Printer”.

  Note that no error message appears on the LCD panel.

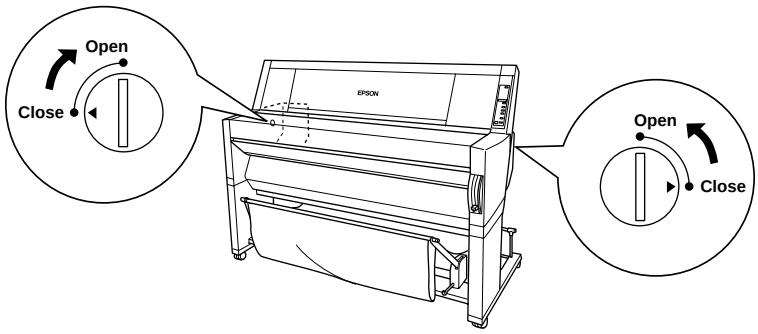

- ❑ Run the Head Cleaning utility. See “Using the Printer Utilities”.
- ❑ If the Head Cleaning utility doesn’t work, replace the ink cartridges. See “Replacing Ink Cartridges”.

Printouts are Not What You Expected

Incorrect or garbled characters

Try one or more of these solutions:

- ❑ Select your printer as the default printer in Windows. See “Your EPSON printer is not selected as the default printer”.

- Clear any stalled print jobs from the Progress Meter (for Windows), or EPSON Monitor3 (for Macintosh). See “Using the Progress Meter”, or “Using EPSON Monitor3”.
- Turn off the printer and computer. Make sure the printer’s interface cable is plugged in securely.
- Make sure the running application is for Windows 95, 98, NT 4.0 or Macintosh.
- Make sure the EPSON Stylus Pro 9000 printer driver is selected.

  If you are using Windows NT 4.0, try to install the EPSON Printer Port. Click Start, point to Programs, then point to EPSON Printers, and point to EPSON Printer Port Uninstall. Follow the messages on the screen.

Incorrect margins

Try one or more of these solutions:

- Check the margin settings in your application software.
- Make sure the margins are within the printable area of the page. See “Printable area”.
- For Windows, check the settings in the Paper menu. Make sure they are correct for the paper size you are using.

  For Macintosh, check the settings in the Page Setup dialog box. Make sure they are correct for the paper size you are using.
- Make sure the paper set position is correct. Line the paper up straightly and close to the rows of punch holes on the printer.

Inverted image

Turn off the Flip Horizontal setting in the printer driver. For instructions, see online help for the printer driver.

Blank pages print

Try one or more of these solutions:

- Select your printer as the default printer in Windows. See “Your EPSON printer is not selected as the default printer”.
- For Windows, check the settings in the Paper menu. Make sure they are correct for the paper size you are using.

  For Macintosh, check the settings in the Page Setup dialog box. Make sure they are correct for the paper size you are using.

Printed color differs from the color on the screen

Try one or more of these solutions:

- To color match your system, select sRGB for Windows, or ColorSync for Macintosh, in the Advanced dialog box.

  Since monitors and printers produce colors differently, printed colors will not always match on screen colors perfectly. However, the above color systems are provided to overcome color differences.
- Select PhotoEnhance3 in the Advanced dialog box. You can produce sharper images with more vivid colors.
- Select Color Adjustment in the Advanced dialog box and adjust color, brightness, etc. as required.

- For Macintosh, make sure your application and image reading devices support the ColorSync system when you are selecting ColorSync in the Advanced dialog box.
- Do not use plain paper.

  The color of printout images can differ with media. Use the appropriate paper for your color printing requirements.

A ruled line shifts

Make sure the print heads are not misaligned.

When bi-directional printing is made, the ruled lines will shift if the print heads are misaligned. Run the Print Head Alignment utility. See “Using the Printer Utilities”.

Printout has smears on the bottom edge

Try one or more of these solutions:

- If the paper is curled towards the printable side, flatten it or curl it slightly to the opposite side.
- For EPSON paper, check the Media Type setting in the Main menu for Windows or in the Print dialog box for Macintosh. Make sure it is correct for the paper you’re using.

  For paper other than EPSON’s, register and select paper thickness in the SelecType mode. Make sure it is correct for the paper you’re using. See “SelecType Settings”.
- Set the platen gap setting to WIDE in the Printer Setting menu of the SelecType mode. See “SelecType Settings”.

Print Quality Could be Better

Click the caption under the illustration that best resembles your printout.

 “Horizontal banding”	 “Vertical misalignment or banding”
 “Incorrect or missing colors”	 “Faint printout or gaps”
 “Blurry or smeared printout”	

If you are having print quality problems, try the solutions offered here.

Horizontal banding

Try one or more of these solutions:

- For Windows, check the Media Type setting in the Main menu. Make sure it is correct for the paper you’re using.

  For Macintosh, check the Media Type setting in the Print dialog box. Make sure it is correct for the paper you’re using.

- Make sure the printable side of the paper is face-up.

- Run the Head Cleaning utility to clear any clogged ink nozzles.
- Check the Ink Out lights. If necessary, replace ink cartridges. See “Replacing Ink Cartridges”.

Vertical misalignment or banding

Try one or more of these solutions:

- Turn off the High Speed setting in your printer driver. For instructions, see the printer driver’s online help.
- Run the Print Head Alignment utility. See “Using the Printer Utilities”.

Incorrect or missing colors

Try one or more of these solutions:

- For Windows, check the Media Type setting in the Main menu. Make sure it is correct for the paper you’re using.

  For Macintosh, check the Media Type setting in the Print dialog box. Make sure it is correct for the paper you’re using.
- Make sure the printable side of the paper is face-up.
- Run the Head Cleaning utility. See “Using the Printer Utilities”.

  If colors are still incorrect or missing, replace one or all ink cartridges. See “Replacing Ink Cartridges”.
- Adjust the color settings in your application software or your printer driver. See your application’s documentation.

Faint printout or gaps

Try one or more of these solutions:

- ❑ Make sure that the ink cartridges do not exceed the expiry date. The expiry date is labeled on the outside of the ink cartridge.
- ❑ For Windows, check the Media Type setting in the Main menu. Make sure it is correct for the paper you're using.

  For Macintosh, check the Media Type setting in the Print dialog box. Make sure it is correct for the paper you're using.
- ❑ Run the Head Cleaning utility to clear any clogged ink nozzles. See "Using the Printer Utilities".
- ❑ Check the Ink Out lights. If necessary, replace ink cartridges. See "Replacing Ink Cartridges".
- ❑ Select thinner paper in the SelecType mode. Check the paper number setting in the Paper Configuration menu. See "SelecType Settings".
- ❑ The platen gap may be too wide for your paper. Change the platen gap setting from WIDE to AUTO in the Printer Setting menu of the SelecType mode. See "SelecType Settings".

Blurry or smeared printout

Try one or more of these solutions:

- ❑ For Windows, check the Media Type setting in the Main menu. Make sure it is correct for the paper you're using.

  For Macintosh, check the Media Type setting in the Print dialog box. Make sure it is correct for the paper you're using.

- If the paper you're using is not supported by the printer driver, set the paper thickness using the SelecType setting. See "SelecType Settings".
- Make sure your paper is dry and the printable side is face-up. Also, make sure you are using the correct type of paper. See "Paper" for specifications.
- Ink may have leaked inside the printer; wipe the inside of the printer with a soft, clean cloth.
- Run the Head Cleaning utility. See "Using the Printer Utilities".
- Select thicker paper in the SelecType mode. Check the paper number setting in the Paper Configuration menu. See "SelecType Settings".
- The platen gap may be too narrow for your paper. Set the platen gap setting to WIDE in the Printer Setting menu of the SelecType mode. See "SelecType Settings".

Color Documents Print in Black Only

Try one or more of these solutions:

- Make sure the color data settings in your application software are correct.
- Make sure Color (not Black) is set in the Main menu for Windows or Print dialog box for Macintosh.

Printing Could be Faster

Try one or more of these solutions:

- To increase print speed, select the Automatic mode in the Main menu for Windows or in the Print dialog box for Macintosh and then move the slider towards Speed.
- Do not run too many applications at the same time. Close any applications you are not using.
- Delete unnecessary files to make room on your hard disk drive.

  Note:
  Your computer may not have enough memory. For further tips, see "Increasing the Print Speed (Windows only)".

Roll Paper Cannot be Cut

Try one or more of these solutions:

- Make sure that the Roll Auto Cut light is on. Press the Paper Source button if necessary. Then press the Cut/Eject button. The printer cuts the roll paper.
- Cut the roll paper by hand if necessary. Check that the paper thickness of the roll paper loaded in the printer matches the paper specification (see "Paper"). If so, the paper cutter may be blunt and require replacement as described in "Replacing the Paper Cutter".

  Note:
  If you use roll paper other than EPSON special media, see the user documentation included with the paper, or contact your supplier.

Paper Feed or Paper Jam Problems Occur Frequently

Try one or more of these solutions:

- ❑ Secure the roll paper you are not using with the roll paper belt when two roll paper spindles are installed. See “Using the roll paper belt”.
- ❑ Before loading paper and guiding it through the paper insertion slot, make sure the roll paper is wound up firmly. Position the bottom edge of the paper straightly and in line with the rows of punch holes on the printer.
- ❑ Make sure the paper is not folded or wrinkled.
- ❑ Make sure printing occurs within the operational temperature range.
- ❑ Make sure the paper is not damp.
- ❑ Make sure the paper is not too thick or too thin. See “Paper”.
- ❑ Make sure no foreign objects are inside the printer.
- ❑ For Windows, check the Media Type setting in the Main menu. Make sure it is correct for the paper you are using.

  For Macintosh, check the Media Type setting in the Print dialog box. Make sure it is correct for the paper you are using.
- ❑ Make sure that the platen gap setting matches your paper. You can change the platen gap setting in the Printer Setting menu of the SelecType mode. See “SelecType Settings”.
- ❑ For paper other than EPSON's, check the paper type selected in the Paper Configuration menu of the SelecType mode. See “Setting the paper thickness”.

Roll Paper does not Eject Properly

Roll paper is wound tightly and may feed with a curl. If so, extend the three paper guides out from the lower printer.

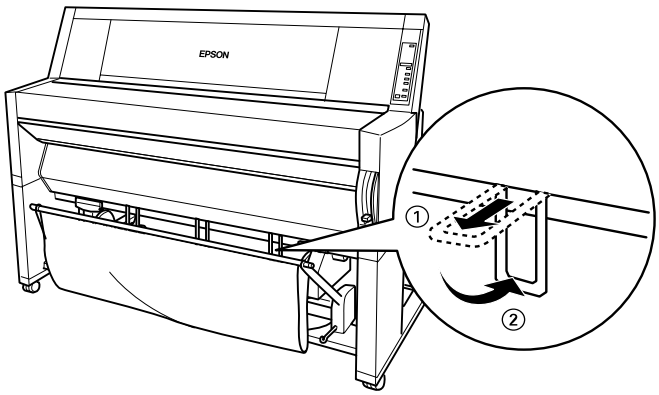

Caution:
The paper guides only need to be used when the paper feeds with a curl. At other times, keep the paper guides pushed in, otherwise your printouts may be damaged.

When feeding paper forward

Extend the paper guides out from the printer so they rest on the front of the paper basket.

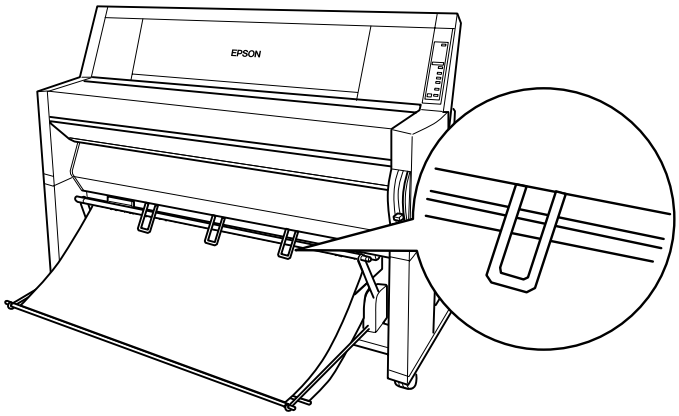

When feeding paper backward

Extend the paper guides out from the printer so that they rest on the back of the paper basket.

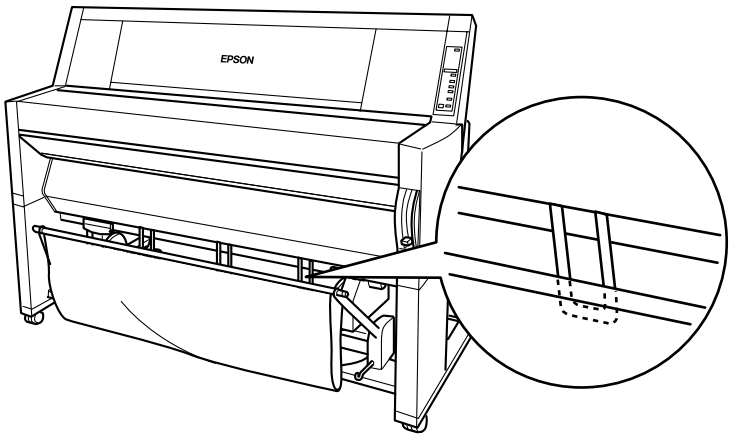

Clearing Paper Jams

To remove jammed paper, follow these steps:

1. If roll paper is jammed, cut the paper at the paper insertion slot.

2. Pull the paper set lever all the way up to release the paper.

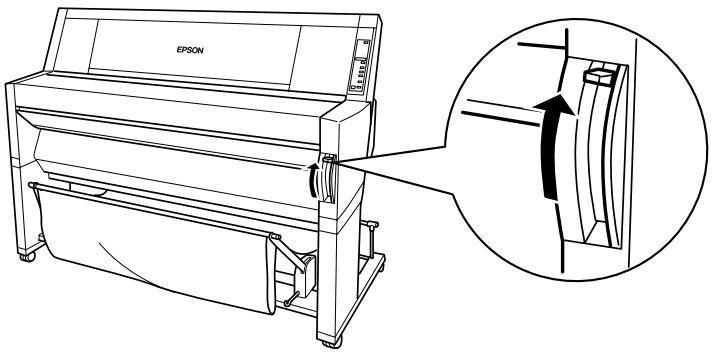

3. Open the lower cover if necessary.

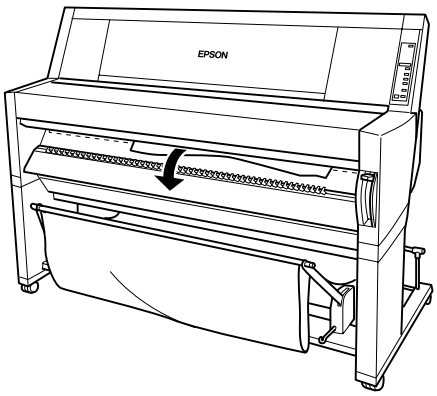

4. Carefully pull down the jammed paper. ”TURN PWR OFF AND ON” is displayed on the LCD panel.

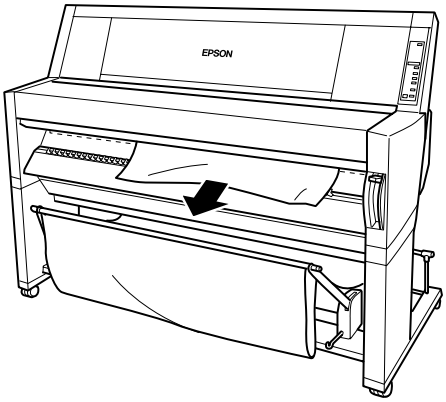

5. Close the lower cover, if necessary, then press the Power button to turn the printer off and back on.

6. Make sure that the Paper Out light is on and ”LOAD PAPER” is displayed on the LCD panel. To load paper see “Using Roll Paper” or “Using Cut Sheet Media”.

Note:
When you install two roll paper spindles, secure the roll paper that you are not using with the roll paper belt packed with your printer. See “Using the roll paper belt”.

If you do not resume printing afterwards, make sure the print heads are in the home (far right) position. If not, turn the printer on, wait until the print heads move to the home position, then turn off the printer.

Caution:
If the print heads are not left in the home position, print quality may decline.

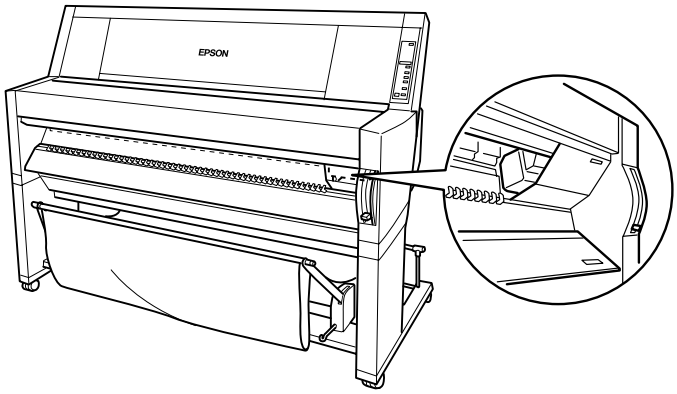

Customer Information

Contacting Customer Support

If your printer is not operating properly and you cannot solve the problem using the troubleshooting information in your printer documentation or through online help, contact customer support services for assistance.

We will be able to help you much more quickly if you give us the following information.

Number of your printer:
(The serial number label is on the back of the printer.)

Printer model:

Brand and model of your computer:

Printer software version:
(Click About in your printer driver)

Windows version you are using:

Software application(s) you normally use with your printer and their version number(s):

Select your country:

- ❑ "For United Kingdom and the Republic of Ireland Users"
- ❑ "For Australian Users"
- ❑ "For Singapore Users"
- ❑ "For Hong Kong Users"
- ❑ "For Philippines Users"

For United Kingdom and the Republic of Ireland Users

If you purchased your printer in the UK or the Republic of Ireland, EPSON (UK) Limited provides a range of customer services and technical support.

World Wide Web

If you can connect to the Internet and have a Web browser, you can access our Web site at http://www.epson.co.uk. Here you will find information on the latest EPSON products, software drivers, on line user guides, and answers to frequently asked questions.

Faxon EPSON

Contact Faxon EPSON Faxback Service for support information including troubleshooting tips, switch settings, and driver information.

To use Faxon EPSON, call 01442 227332 in the UK or 0044 1442 227332 from the Republic of Ireland using a touch-tone phone. You will be asked to follow a simple routine to register your document request. Once you have entered your telephone and fax numbers, Faxon EPSON will fax a copy of the document catalogue to your fax machine.

When you have found the documents that you need in the catalogue, call Faxon EPSON again and enter the document ID numbers. The documents will be faxed to you automatically.

Bulletin Board Service for latest drivers and utilities

You can call the EPSON Bulletin Board Service on 01442 227479 in the UK or 0044 1442 227479 from the Republic of Ireland. No membership is required. Make sure that your communications software is set to 8 data bits, 1 stop bit, no parity bit, ANSI terminal mode emulation, and a modem speed of up to 28.8 Kbps. Downloading protocols supported include Xmodem, Ymodem and Zmodem. See the documentation that came with your communications software and modem for more information.

When you first connect to the Bulletin Board Service, you will be asked for your name, company name, phone number and a password (which you can invent yourself).

Customer and Warranty Support

Our Customer and Warranty Support teams can be contacted by calling 0870 163 7766 in the UK or 0044 0870 163 7766 from the Republic of Ireland. They can provide the following services:

- Technical information on installing, configuring, and operating your EPSON products
- Arranging for faulty EPSON products to be repaired within the warranty period

A full list of EPSON Customer and Warranty Support services is available on the technical support section of our World Wide Web pages at http://www.epson.co.uk/support/ and on Faxon EPSON Faxback service in document number 5085.

Pre Sales Enquiry Desk

The Enquiry Desk team can be contacted by calling 0800 220546 in the UK or 1 800 409132 from the Republic of Ireland, by faxing 01442 227271 in the UK or 0044 1442 227271 from the Republic of Ireland, and via Email at info@epson.co.uk. They can provide the following information:

- Pre Sales information and literature on new EPSON products (also available via our World Wide Web site at http://www.epson.co.uk)
- Where to purchase genuine EPSON consumables, accessories, and options

For Australian Users

EPSON Australia wishes to provide you with a high level of Customer Service. As well as the product documentation, we provide the following sources for obtaining information:

EPSON FAXBACK

EPSON FAXBACK will fax you the latest specifications and pricing for most EPSON products offered in Australia. There is also technical information including details of the latest software and drivers available. Phone (02) 9903 9075 and the system will guide you through a number of choices before faxing the information to your fax machine.

EPSON Bulletin Board System

This is where you can download the latest software and drivers. Visit the BBS to check out the latest versions. If you have a modem, phone (02) 9417 5090.

Internet URL http://www.epson.com.au

Access the EPSON Australia World Wide Web pages. Worth taking your modem here for the occasional surf! You can get the same information as offered on the EPSON FAXBACK and the EPSON Bulletin Board plus more.

Your dealer

Don't forget that your dealer can often help identify and resolve problems. The dealer should always be the first call for advice on problems. They can often solve problems quickly and easily as well as give you advice on the next step to take.

EPSON Helpdesk

EPSON Helpdesk is provided as a final backup to make sure our clients have access to advice. Operators on the Helpdesk can aid you in diagnosing hardware and software problems. They can also advise you on the latest EPSON products and where the nearest dealer or service agent is located. Many types of queries are answered here.

The Helpdesk numbers are:

Phone	(02) 9903 9040
Fax	(02) 9903 9189

We encourage you to have all the relevant information on hand when you ring. The more information you prepare, the faster we can help solve the problem. This information includes the product documentation for your EPSON product, type of computer, operating system, application programs, and any other information you feel is required.

For Singapore Users

Contact the telephone and fax numbers below:

Phone	(065) 337-7911
Fax	(065) 334-1185

For Hong Kong Users

To obtain technical support as well as other after-sales services, users are welcome to contact EPSON Hong Kong Limited.

Internet home page

EPSON Hong Kong has established a local home page in both Chinese and English on the Internet to provide users with the following information:

- Product information
- Answers to Frequently Asked Questions (FAQs)
- Latest versions of EPSON printer drivers

Users can access our World Wide Web home page at:
http://www.epson.com.hk

Electronic bulletin board system

An electronic bulletin board system (BBS) is also available to obtain printer information and the latest versions of printer drivers. You can log on to the following number for the BBS service:

BBS	(852) 2827-4244

Technical Support Hotline

You can also contact our technical staff at the following telephone and fax numbers:

Phone	(852) 2585-4399
Fax	(852) 2827-4383

For Philippines Users

To obtain technical support as well as other after sales services, users are welcome to contact the EPSON Philippines Representative Office at the telephone and fax numbers below:

Phone	(632) 813-6552
Fax	(632) 813-6545
BBS	(632) 814-0595

Product Information
Printer Specifications
- Printing
- Printable area
- Mechanical
- Electrical
- Environmental
- Initialization
- Safety approvals
- Paper
- Ink cartridges

System Requirements
- For using your printer with a PC
- For using your printer with a Macintosh

Interface Specifications
- Parallel interface
- Serial interface

Options and Consumable Products
- Options
- Consumable products
- EPSON special media

Glossary
The Control Panel
Buttons, Lights and Messages
- Buttons
- Lights
- Status messages

SelecType Settings
- When to use SelecType
- Basic SelecType setting procedure
- SelecType menus
- Printing a nozzle check pattern
- Performing the head alignment
- Aligning the print heads
- Setting the paper thickness
- Printing a status sheet

SelecType in Summary
- SelecType mode chart
- SelecType menu list

Maintenance Mode
How to enter the maintenance mode
Items
Hex dump
Language
Printer Software
Accessing the Printer Software
Accessing the printer software for Windows
Accessing the printer software for Macintosh
Using the Printer Driver
Making the Media Type setting
Using the Automatic, Custom and Advanced settings
Adjusting page orientation and printable area
Fitting documents onto the page
Using the Roll Paper Settings
Using the Printer Utilities
Accessing the printer utilities for Windows
Accessing the printer utilities for Macintosh
Using Printer and Option Information (Windows only)
Getting Information Through Online Help
Accessing help from Windows
Accessing help from Macintosh
Increasing the Print Speed (Windows only)
General tips
Using Speed & Progress
Port Configuration (Windows NT 4.0 only)
Checking Printer and Print Job Status for Windows
Using the Progress Meter
Using the EPSON Spool Manager
Using EPSON Status Monitor 2
Checking Printer and Print Job Status for Macintosh
Using the EPSON StatusMonitor
Making Configuration Settings
Controlling Background Printing
Uninstalling the Printer Software (Windows only)
Paper Handling
Notes for Special Media and Other Media
EPSON special media
Using paper other than EPSON special media

Using Roll Paper
Attaching the roll paper to the spindle
Removing the roll paper from the spindle
Attaching and removing the spindle from the printer
Loading the roll paper
Using the roll paper belt
Cutting roll paper or printing page lines
Using Cut Sheet Media
Loading cut sheet media
Printing on thick paper (0.5 mm or thicker)
Setting the Paper Basket
When feeding paper forward
When feeding paper backward
Maintenance and Transportation
Replacing Ink Cartridges
Replacing the Paper Cutter
Cleaning the Printer
Transporting the Printer
A long distance
A short distance
Setting up the printer after transporting it
Troubleshooting
Printer Stops Printing Unexpectedly
Head cleaning, ink charging, or ink drying is in progress
An error has occurred
The Printer does not Turn on or Stay on
The Printer Prints Nothing
The printer is not correctly connected to the computer
Your EPSON printer is not selected as the default printer
Printer port setting does not match the printer connection port (Windows)
The printer driver doesn't have enough available memory (Macintosh)
The printer sounds like it is printing, but nothing prints
Printouts are Not What You Expected
Incorrect or garbled characters
Incorrect margins
Inverted image
Blank pages print

Printed color differs from the color on the screen
A ruled line shifts
Printout has smears on the bottom edge
Print Quality Could be Better
Horizontal banding
Vertical misalignment or banding
Incorrect or missing colors
Faint printout or gaps
Blurry or smeared printout
Color Documents Print in Black Only
Printing Could be Faster
Roll Paper Cannot be Cut
Paper Feed or Paper Jam Problems Occur Frequently
Roll Paper does not Eject Properly
When feeding paper forward
When feeding paper backward
Clearing Paper Jams
Customer Information
Contacting Customer Support
For United Kingdom and the Republic of Ireland Users
For Australian Users
For Singapore Users
For Hong Kong Users
For Philippines Users
Index

Where to Find Information

This Startup Guide

Provides you with the basic information you need to start using your EPSON STYLUS PRO 9000 and its optional and consumable products.

Online Guide (may not be available in some countries)

Provides you with detailed information about printing on roll paper or cut sheet media, the control panel, the printer software, and tips that will help you get the results you want.

Online Help

Provides you with detailed information and instructions on the printer software that controls your printer. (Online help will be automatically installed when you install the printer software.) See your *Online Guide* for information on accessing online help.

EPSON® STYLUS™ PRO 9000

Color Ink Jet Printer

All rights reserved. No part of this publication may be reproduced, stored in a retrieval system, or transmitted in any form or by any means, electronic, mechanical, photocopying, recording, or otherwise, without the prior written permission of SEIKO EPSON CORPORATION. The information contained herein is designed only for use with this EPSON printer. EPSON is not responsible for any use of this information as applied to other printers.

Neither SEIKO EPSON CORPORATION nor its affiliates shall be liable to the purchaser of this product or third parties for damages, losses, costs, or expenses incurred by the purchaser or third parties as a result of: accident, misuse, or abuse of this product or unauthorized modifications, repairs, or alterations to this product, or (excluding the U.S.) failure to strictly comply with SEIKO EPSON CORPORATION's operating and maintenance instructions.

SEIKO EPSON CORPORATION shall not be liable for any damages or problems arising from the use of any options or any consumable products other than those designated as Original EPSON Products or EPSON Approved Products by SEIKO EPSON CORPORATION.

SEIKO EPSON CORPORATION shall not be held liable for any damage resulting from electromagnetic interference that occurs from the use of any interface cables other than EPSON Approved Products by SEIKO EPSON CORPORATION.

EPSON is a registered trademark and ESC/P Raster and EPSON STYLUS are trademarks of SEIKO EPSON CORPORATION.

Microsoft and Windows are registered trademarks of Microsoft Corporation.

General Notice: Other product names used herein are for identification purposes only and may be trademarks of their respective owners. EPSON disclaims any and all rights in those marks.

Copyright © 1999 by SEIKO EPSON CORPORATION, Nagano, Japan.

Printed on Recycled Paper.

Startup Guide

Declaration of Conformity

Manufacturer	SEIKO EPSON CORPORATION
Address	3-5, Owa 3-chome, Suwa-shi, Nagano-ken 392-8502 Japan
Representative	EPSON EUROPE B.V.
Address	Prof. J. H. Bavincklaan 5 1183 AT Amstelveen The Netherlands

Declares that the Product:

Product Name	Ink Jet Printer
Model	P130A

Conforms to the following Directive(s) and Norm(s):

Directive 89/336/EEC	EN 55022 Class B EN 61000-3-2 EN 61000-3-3 EN 50082-1 IEC 801-2 IEC 801-3 IEC 801-4
Directive 73/23/EEC	EN 60950

January 1999

H. Horiuchi
President of EPSON EUROPE B.V.

Contents

Declaration of Conformity 2

Safety Instructions

Important Safety Instructions 5
A Few Precautions. 6
ENERGY STAR Compliance 8
For United Kingdom Users 8
Use of options 8
Safety information 8
Warnings, Cautions, and Notes. 9

Taking a Look at Your Printer

Front view 10
Rear view 10

Chapter 1 Setting up the Printer with Your PC

Connecting the Printer to Your PC 1-2
Using the built-in parallel interface 1-2
Installing the Printer Software on Your PC 1-3
Printer software components 1-3
Installing on Windows 95, 98, and NT 4.0 1-4
Upgrading to Windows 98 1-5
Printing on a Peer-to-Peer Network 1-6
For Windows 95 and 98. 1-6
For Windows NT 4.0 1-10

Chapter 2 Setting up the Printer with Your Macintosh

Connecting the Printer to Your Macintosh 2-2
Using the built-in serial interface 2-2
Installing the Printer Software on Macintosh 2-4
Printer software components 2-4
Installing on Macintosh 2-5
Using the Chooser to select your printer 2-7

Chapter 3 Printing and Printer Management

Loading Paper 3-2
Loading roll paper 3-2
Loading cut sheet media 3-7
Printing From Your PC 3-10
Making the printer driver settings 3-10
Cancelling printing from your PC 3-14
Printing From Your Macintosh 3-15
Making the printer driver settings 3-15
Cancelling printing from your Macintosh 3-18

Chapter 4 Checking the Printer's Condition

Using Printer Utilities 4-2
Accessing the printer utilities 4-2
Printing the Nozzle Check Pattern 4-3
Cleaning the Print Heads 4-4
Aligning the Print Heads 4-6

Chapter 5 Using an Optional Interface Card

Available Optional Interface Cards 5-2
Installing the Optional Interface Card 5-2

Safety Instructions

Important Safety Instructions

Read all of these instructions before using your printer. Also be sure to follow all warnings and instructions marked on the printer.

- ❑ Do not block or cover the openings in the printer's cabinet.
- ❑ Do not insert objects through the slots. Take care not to spill liquid on the printer.
- ❑ Use only the type of power source indicated on the printer's label.
- ❑ Connect all equipment to properly grounded power outlets. Avoid using outlets on the same circuit as photocopiers or air control systems that regularly switch on and off.
- ❑ Avoid electrical outlets controlled by wall switches or automatic timers.
- ❑ Keep the entire computer system away from potential sources of electromagnetic interference, such as loudspeakers or the base units of cordless telephones.
- ❑ Do not use a damaged or frayed power cord.
- ❑ If you use an extension cord with the printer, make sure the total ampere rating of the devices plugged into the extension cord does not exceed the cord's ampere rating. Also, make sure the total ampere rating of all devices plugged into the wall outlet does not exceed the wall outlet's ampere rating.
- ❑ Do not attempt to service the printer yourself.

- Unplug the printer and refer servicing to qualified service personnel under the following conditions:

  The power cord or plug is damaged; liquid has entered the printer; the printer has been dropped or the cabinet damaged; the printer does not operate normally or exhibits a distinct change in performance.

- If you plan to use the printer in Germany, observe the following:

  To provide adequate short-circuit protection and over-current protection for this printer, the building installation must be protected by a 16 Amp circuit breaker.

  Bei Anschluß des Druckers an die Stromversorgung muß sichergestellt werden, daß die Gebäudeinstallation mit einem 16 A-Überstromschalter abgesichert ist.

A Few Precautions

When using the printer

- Do not put your hand inside the printer or touch the ink cartridges during printing.

- Do not move the print heads by hand; otherwise you may damage the printer.

- Always turn the printer off using the Power button on the control panel. When this button is pressed, the Operate light flashes briefly then goes off. Do not unplug the printer or turn off the power to the outlet until the Operate light stops flashing.

- Before transporting the printer, make sure the print heads are in the home (far right) position and the ink cartridges are in place.

When handling the ink cartridges

- Keep ink cartridges out of the reach of children and do not drink.
- If ink gets on your skin, wash it off with soap and water. If it gets in your eyes, flush them immediately with water.
- Do not shake ink cartridges as this can cause leakage.
- Install ink cartridges immediately after removing from the package. Leaving a cartridge unpacked for a long time before use may result in reduced print quality.
- Once you install an ink cartridge, do not open the clamp or remove the cartridge except to replace it with a new one. The cartridge may become unusable otherwise.
- Do not use an ink cartridge beyond the date printed on the cartridge carton. For best results, use up the ink cartridges within six months of installation.
- Do not dismantle the ink cartridges or try to refill them. This could damage the print heads.

When choosing a place for the printer

- Place the printer on a flat, stable surface that is larger than the printer. The printer will not operate properly if it is tilted or at an angle.
- Avoid places subject to rapid changes in temperature and humidity. Also keep it away from direct sunlight, strong light, or heat sources.
- Avoid places subject to shocks and vibrations.
- Place the printer near a wall outlet where the plug can be easily unplugged.

  Note for French-speaking users:
  Placez l'imprimante près d'une prise de contacte où la fiche peut être débranchée facilement.

ENERGY STAR Compliance

As an ENERGY STAR Partner, EPSON has determined that this product meets the ENERGY STAR guidelines for energy efficiency.

The International ENERGY STAR Office Equipment Program is a voluntary partnership with the computer and office equipment industry to promote the introduction of energy-efficient personal computers, monitors, printers, fax machines, and copiers in an effort to reduce air pollution caused by power generation.

For United Kingdom Users

Use of options

EPSON (UK) Limited shall not be liable against any damages or problems arising from the use of any options or consumable products other than those designated as Original EPSON Products or EPSON Approved Products by EPSON (UK) Limited.

Safety information

Warning:
This appliance must be earthed. Refer to rating plate for voltage and check that the appliance voltage corresponds to the supply voltage.

Important:
The wires in the mains lead fitted to this appliance are coloured in accordance with the following code:

Green and yellow — Earth
Blue — Neutral
Brown — Live

If you have to fit a plug:
As the colours of the mains lead of this appliance may not match coloured markings used to identify the terminals in a plug, please proceed as follows:

The green and yellow wire must be connected to the terminal in the plug which is marked with the letter E or the earth symbol (□).

The blue wire must be connected to the terminal in the plug marked with the letter N.

The brown wire must be connected to the terminal in the plug marked with the letter L.

If damage occurs to the plug, replace the cord set or consult a qualified electrician.

Replace fuses only with a fuse of the correct size and rating.

Warnings, Cautions, and Notes

Warnings *must be followed carefully to avoid bodily injury.*

Cautions *must be observed to avoid damage to your equipment.*

Notes *contain important information and useful tips on the operation of your printer.*

Taking a Look at Your Printer

Front view

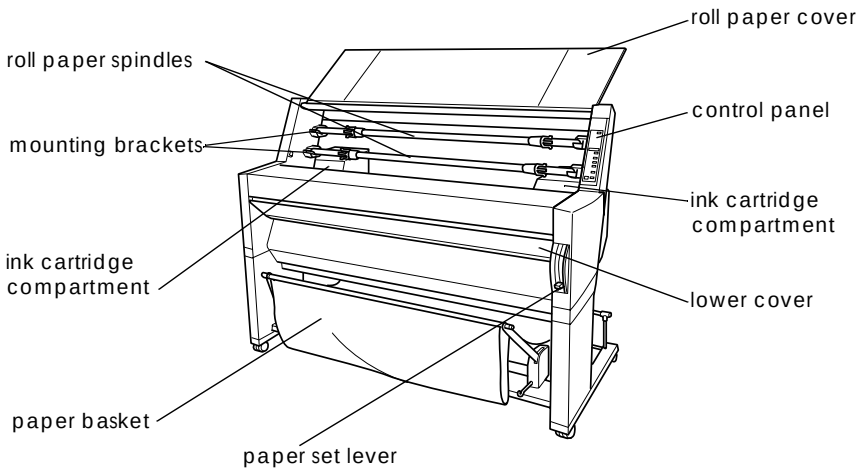

Rear view

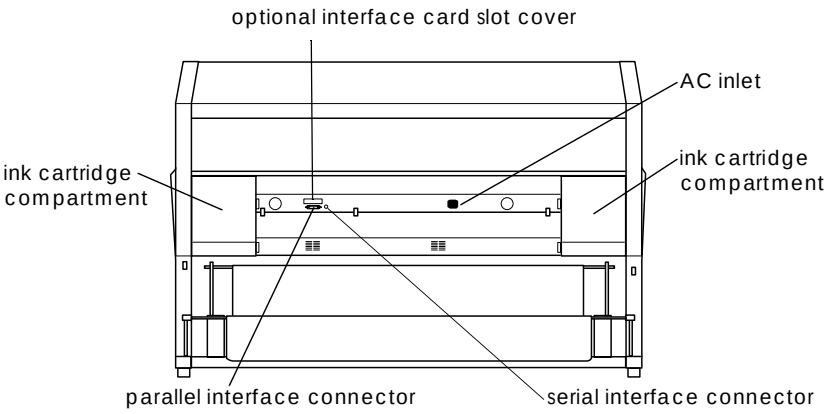

Chapter 1

Setting up the Printer with Your PC

1

Connecting the Printer to Your PC 1-2
Using the built-in parallel interface 1-2

Installing the Printer Software on Your PC 1-3
Printer software components 1-3
Installing on Windows 95, 98, and NT 4.0 1-4
Upgrading to Windows 98 1-5

Printing on a Peer-to-Peer Network 1-6
For Windows 95 and 98 1-6
For Windows NT 4.0 1-10

Connecting the Printer to Your PC

The method you use to connect the printer to your PC depends on whether you want to send print jobs directly to the printer using the printer's built-in parallel interface, or send print jobs to the printer over a network using an optional interface card. For information on using optional interface cards, see Chapter 5, "Using an Optional Interface Card".

To connect the printer to a Macintosh, see Chapter 2, "Setting up the Printer with Your Macintosh".

Using the built-in parallel interface

To use the printer's built-in parallel interface, you will need a shielded, twisted-pair cable. Then follow the steps below to connect the printer to your computer.

1. Make sure both the printer and computer are turned off.

2. Plug the cable connector securely into the printer's interface. Then squeeze the wire clips together until they lock into place on both sides. If your cable has a ground wire, connect it to the ground connector below the interface connector.

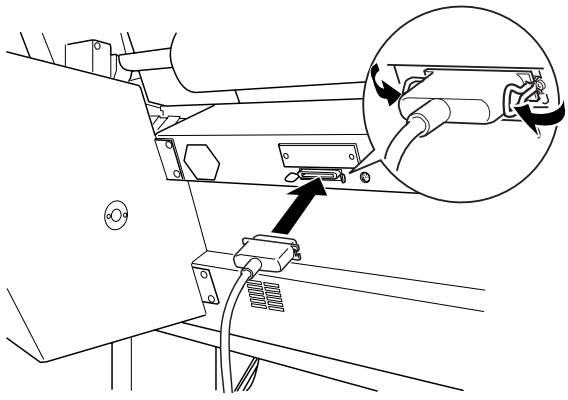

3. Plug the other end of the cable into the computer's parallel port. If a ground wire exists at the computer end of the cable, connect it to the ground connector at the back of the computer.

Now see "Installing the Printer Software on Your PC" on page 1-3. You must install the printer software before using your printer.

Installing the Printer Software on Your PC

After connecting the printer to your computer, you need to install the software included on the "Printer Software for EPSON Stylus PRO 9000" CD-ROM shipped with your printer.

Printer software components

Your printer software includes the following items:

- Printer driver
  The printer driver is the software that runs your printer. With it, you can make settings such as Media Type, Print Quality, and Paper Size.

- Utilities
  The Nozzle Check, Head Cleaning, and Print Head Alignment utilities help you keep your printer in top operating condition.

- EPSON Status Monitor 2
  The EPSON Status Monitor 2 utility notifies you of printer errors and displays printer status information such as the amount of ink remaining. The Status Monitor also guides you when replacing ink cartridges.

Installing on Windows 95, 98, and NT 4.0

Follow these steps to install your printer software:

Note:
If you wish to make a floppy disk version of the printer software included on your CD-ROM, insert the printer software CD-ROM, then click Create Floppy based printer driver/utility disks *and follow the on-screen instructions.*

1. Insert the software CD shipped with your printer in the CD-ROM drive. The Installer dialog box appears.
2. Double-click Install Printer Driver/Utility to start the printer software installation.
3. When the installation is complete, click OK.

Note:
- ❑ *If the New Hardware Found screen or any other Wizard appears when you turn on your computer, click* Cancel *and follow the steps above.*
- ❑ *Installation time varies depending on your computer.*
- ❑ *EPSON Status Monitor 2 installation starts automatically. Click* Cancel *if you do not want to install this utility. If you want to install it later, see "Software" in the Online Guide. If you install EPSON Status Monitor 2, your computer will restart automatically.*

For information on opening and using the printer software, see "Printing From Your PC" on page 3-9. See also "Printer Software" in your *Online Guide*. If you use your printer on a network, see "Printing on a Peer-to-Peer Network" on page 1-6.

Upgrading to Windows 98

When you upgrade from Windows 95 to Windows 98, uninstall the current printer software, then install Windows 98 and the printer software as explained below:

1. Click Start, point to Settings, then click Control Panel.
2. Double-click the Printers icon in the Control Panel window.
3. Right-click your printer icon and click Delete in the dialog box.
4. Follow the messages on your screen.
5. Install the printer driver again. See “Installing on Windows 95, 98, and NT 4.0” on page 1-4.

Printing on a Peer-to-Peer Network

For Windows 95 and 98, see below. For Windows NT 4.0, see "For Windows NT 4.0" on page 1-10.

For Windows 95 and 98

This section tells you how to set up your printer so that other computers on a network can use it.

First, you need to set up the printer as a shared printer on the computer to which the printer is connected. Then, you must signify the network path to the printer from each computer to use the printer, and install the printer software on those computers.

Note:
This section describes how to use your printer as a shared printer on a network. To connect your printer directly to a network without setting it up as a shared printer, consult your network administrator.

Setting up your printer as a shared printer

Follow these steps to share a printer connected directly to your computer with other computers on a network:

1. Click Start, point to Settings, then click Control Panel.
2. Double-click Network.

3. Click File and Print Sharing.

4. Click the I want to be able to allow others to print to my printer(s) check box and click OK.

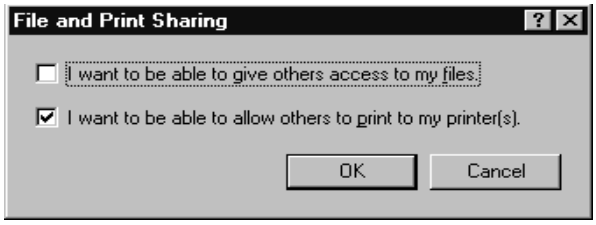

5. In the Network window, click OK.

6. In the Control Panel, double-click Printers.

Note:

- ❑ *If a dialog box requesting the Windows 95 or 98 CD-ROM appears, insert the CD-ROM in the CD-ROM drive, then follow the messages on the screen.*

- ❑ *If a dialog box appears requesting you to restart your computer, do so. Then open the Printer folder, and continue from step 7.*

7. Select your printer, and choose Sharing from the File menu.

8. Click Shared As, enter printer information as needed, then click OK.

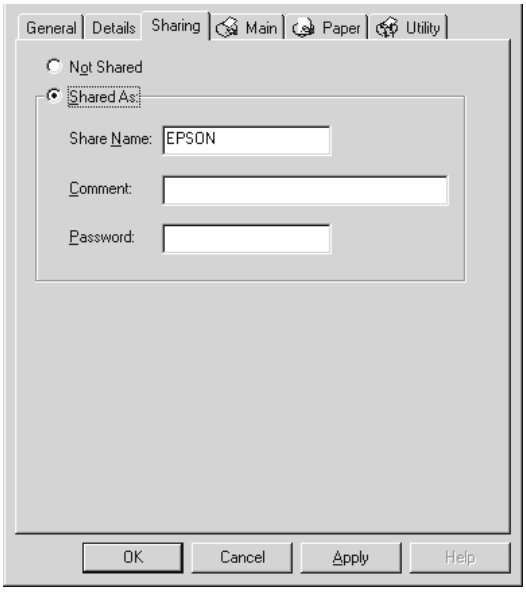

Accessing the printer through a network

To access your printer from another computer on a network, follow these steps.

Note:
Your printer must be set up as a shared resource on the computer to which it is directly connected before you can access it from another computer. For instructions, see "Setting up your printer as a shared printer" on page 1-6.

1. On the computer you want to access the printer from, click Start, point to Settings, and click Printers.

2. Double-click the Add Printer icon.

3. The Add Printer Wizard screen appears. Click Next.

4. Click **Network printer**, then click **Next**.

5. Click **Browse**.

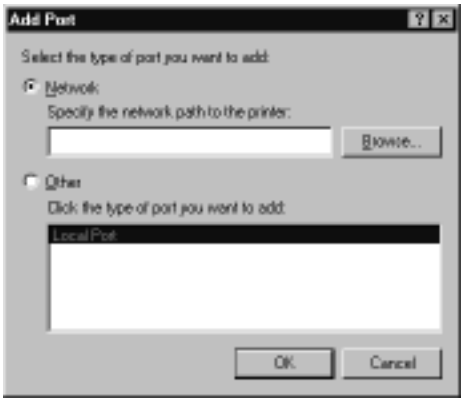

6. Double-click the icon of the computer that is directly connected to the printer. Then click the printer's icon.

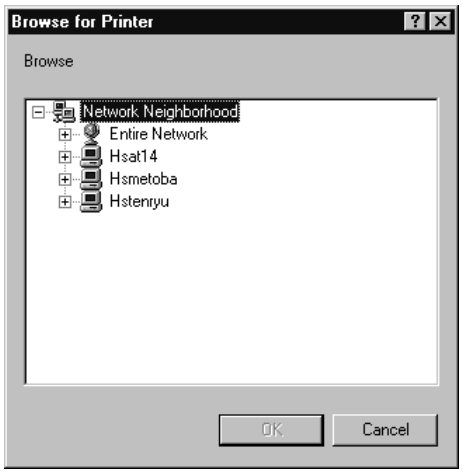

7. Click OK and follow the messages on the screen.

For Windows NT 4.0

This section tells you how to set up your printer so that other computers on the network can use it.

First, you need to set up the printer as a shared printer on the computer to which the printer is connected. Then, you must signify the network path to the printer from each computer to use the printer, and install the printer software on those computers.

Setting up your printer as a shared printer

Follow these steps to share a printer that is connected directly to your computer with others on a network.

1. Click Start, point to Settings, and click Printers.

2. Select your printer, then click Sharing on the File menu.

3. Click the Shared radio button and enter the Share Name.

4. Click OK.

Note:
Do not choose any drivers from the Alternate Drivers list.

Accessing the printer through a network

To access your printer from another computer on a network, follow these steps.

Note:
Your printer must be set up as a shared resource on the computer to which it is directly connected before you can access it from another computer. For instructions, see "Setting up your printer as a shared printer" on page 1-10.

1. On each computer from which you want to access the printer, click Start, point to Settings, and click Printers.

2. Double-click the Add Printer icon.

3. Click the Network printer server radio button. Click Next.

4. Double-click the icon of the computer that is directly connected to the printer. Then click the printer's icon.

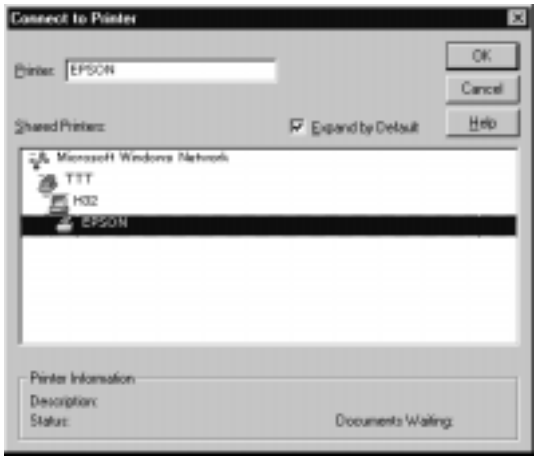

Note:
Be sure to confirm all network settings with the network administrator.

5. Click OK and follow the messages on the screen.

Chapter 2

Setting up the Printer with Your Macintosh

2

Connecting the Printer to Your Macintosh 2-2
Using the built-in serial interface 2-2

Installing the Printer Software on Macintosh 2-4
Printer software components 2-4
Installing on Macintosh 2-5
Using the Chooser to select your printer 2-7

Connecting the Printer to Your Macintosh

The method you use to connect the printer to your Macintosh depends on whether you want to send print jobs directly to the printer using the printer's built-in serial interface, or send print jobs to the printer over a network using an optional interface card. For information on using an optional interface card, see Chapter 5, "Using an Optional Interface Card".

To connect the printer to a PC, see Chapter 1, "Setting up the Printer with Your PC".

Using the built-in serial interface

To use the printer's built-in serial interface, you will need an Apple System Peripheral-8 cable. Then follow the steps below to connect the printer to your Macintosh.

1. Make sure both your printer and Macintosh are turned off.

2. Connect one end of the interface cable to the serial connector on the back of the printer.

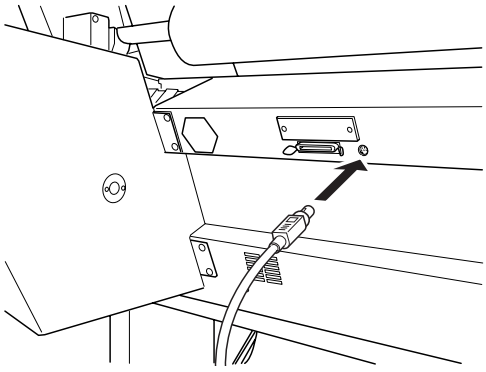

Note:
Use only an Apple System Peripheral-8 cable to connect the printer to your Macintosh. Do not use a LocalTalk cable.

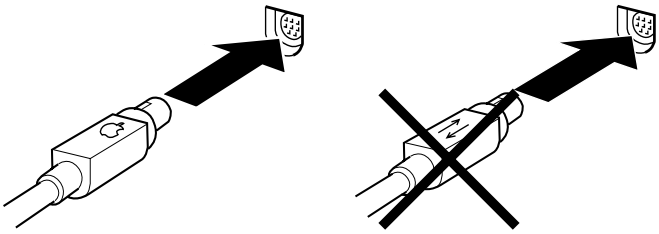

correct incorrect

3. Connect the other end of the interface cable to either the modem port or printer port on the Macintosh. The ports are marked with the following icons. (Some Macintosh PowerBook models have only one serial port.)

modem port

printer port

Note:
If your Macintosh has a built-in modem, connect the interface cable to the printer port.

4. Turn on the printer by pressing the Power button.

5. Turn on your Macintosh.

See the next section for instructions on installing the printer software. You must install the printer software before using your printer.

Installing the Printer Software on Macintosh

After connecting the printer to your Macintosh, you are ready to install the printer software included in the "Printer Software for EPSON Stylus PRO 9000" CD-ROM shipped with your printer.

Printer software components

Your printer software includes the following items:

EPSON Printer Driver Package

- ❑ SPro 9000
  This is the printer driver software that runs your printer. With it, you can make settings such as Media Type, Print Quality, and Paper Size.

- ❑ SPro 9000 (AT)
  This is the printer driver software that gives you control over your printer when used on an AppleTalk network. You can make settings such as Media Type, Print Quality, and Paper Size.

- ❑ EPSON Monitor3
  Monitors and manages background printing jobs. You must turn on background printing in the Chooser to use this utility.

- ❑ EPSON StatusMonitor
  Keeps track of the current status of your printer, and alerts you when printer errors occur.

- ❑ Nozzle Check
  Checks for clogged nozzles.

- ❑ Head Cleaning
  Cleans the print heads to maintain the best print quality.

- Print Head Alignment
  Adjusts the print heads so that vertical and horizontal lines are aligned.

ColorSync 2.0 and Profiles

Matches the colors in your printout with the colors displayed on your screen automatically. Use this when printing scanned photographs or computer graphics.

Installing on Macintosh

Caution:
Turn off all virus protection programs before you install your printer software.

Follow these steps to install your printer software:

1. Insert the printer software CD shipped with your printer in the CD-ROM drive.
2. The EPSON printer software opens automatically.
3. When the Installer icon appears, double-click the icon.

4. After the initial screen appears, click Continue. The following dialog box appears.

5. If you want to install all of the printer software included on your printer software CD-ROM, make sure the Install Location box shows the correct disk drive and click Install. If disk space is limited, select Custom Install from the pop-up menu and click Serial Driver Package or Network Driver Package. Confirm the destination for installation, then click Install.

   Note:
   Click the [i] *icon to get information on each component.*

6. When a message appears informing you that installation is finished, click Restart to complete the installation and restart your computer.

For information on opening and using the printer software, see “Printing From Your Macintosh” on page 3-14. See also “Printer Software” in the *Online Guide*.

Using the Chooser to select your printer

After you install the printer software, you need to open the Chooser to select your printer. You have to choose the printer only the first time you use it or after you have chosen another printer. Your Macintosh will always print using the last printer selected.

If you are using the serial interface, choose your printer driver as described in the following section, “Using the serial interface”. If your system is connected to an AppleTalk network, see “Using an AppleTalk network” on page 2-8.

Using the serial interface

Follow the steps below to use the serial interface to send print jobs directly to the printer:

1. Make sure the printer is connected to your Macintosh and is turned on.

2. Select Chooser from the Apple menu. Then click the SPro 9000 icon and the port your printer is connected to.

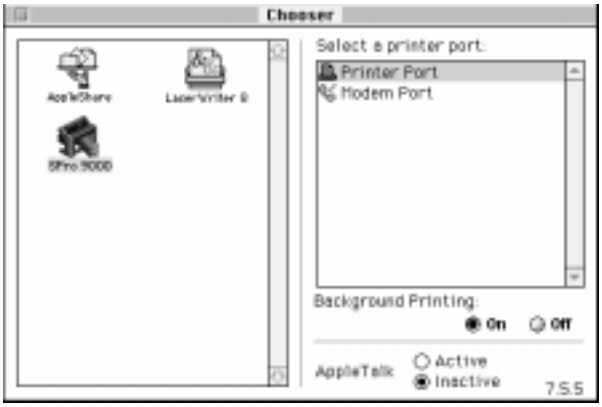

Note:

- *If you are using an AppleTalk network, an alert message may appear when you click the port. In this case, reselect the other port or make the AppleTalk setting* Inactive*, then select the port again.*

- *If you are using your Macintosh in an Ethernet environment, you can connect your printer to either the printer or modem port and leave the AppleTalk setting* Active.

3. Click the Background Printing radio buttons to turn background printing on or off.

   When background printing is on, you can use your Macintosh while it is preparing a document for printing. You must turn on background printing to use the EPSON Monitor3 utility to manage print jobs. For more information, see "Controlling Background Printing" in the *Online Guide.*

4. Close the Chooser.

Using an AppleTalk network

Follow the steps below to use an AppleTalk network to send print jobs to the printer:

1. Make sure the printer is connected to your Macintosh and is turned on.

2. Select Chooser from the Apple menu. Then click the SPro 9000(AT) icon. Select the AppleTalk zone you want to use. A list of all the printers connected to the selected zone appears on the right.

Note:
If you don't see the SPro 9000(AT) *icon, use the arrows on the right to scroll through the available icons.*

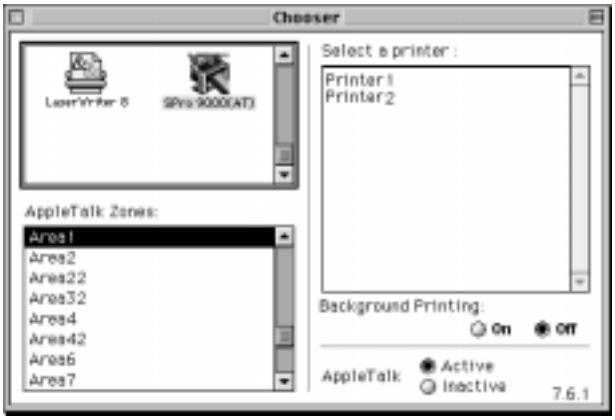

3. Click the name you assigned to your EPSON Stylus Pro 9000.

4. Click OK if the printer model name is correct.

   If your printer name does not appear, make sure the printer is turned on and connected properly.

5. Click the Background Printing radio buttons to turn background printing on or off.

   When background printing is on, you can use your Macintosh while it is preparing a document for printing. You must turn on background printing to use the EPSON Monitor3 utility to manage print jobs. For more information, see "Controlling Background Printing" in your *Online Guide*.

6. Close the Chooser.

Rev. C
A5 size CHAP2.FM
2/1/99 Pass 0
Miyazaki
Yamanouchi
Jacqueline

Chapter 3

Printing and Printer Management

Loading Paper 3-2
Loading roll paper 3-2
Loading cut sheet media 3-7

Printing From Your PC 3-10
Making the printer driver settings 3-10
Cancelling printing from your PC 3-14

Printing From Your Macintosh 3-15
Making the printer driver settings 3-15
Cancelling printing from your Macintosh 3-18

Loading Paper

Loading roll paper

To load the roll paper, follow the steps below.

1. Open the roll paper cover. Make sure that the roll paper is attached to the printer properly.

   Caution:
   Keep your fingers off the printable surface of the media, as fingerprints may reduce printout quality. Whenever possible, use gloves to load paper into the printer.

   Note:
   If two roll paper spindles are attached to the printer, keep the unused roll wound up using the roll paper belt, to avoid paper jams. To secure the roll paper, tap the end of the roll paper belt lightly on the roll paper. To remove the roll paper belt from the roll paper, simply take off the belt.

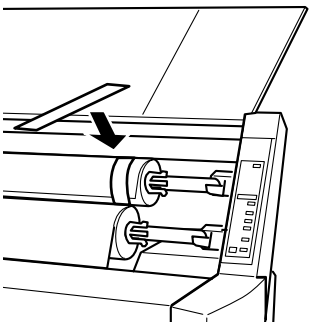

2. Make sure that the printer is on.

3. Press the Paper Source button repeatedly until the Roll Auto Cut light or Roll Cutter Off light is on.

> ***Caution:***
> *If you are loading thick roll paper, select Roll Cutter Off. Paper that is too thick may damage the paper cutter.*

4. Make sure the Operate light or Pause light is not flashing, then pull the paper set lever all the way up. The Paper Out light turns on and LOAD PAPER appears on the LCD panel.

> ***Caution:***
> *Do not move the paper set lever up while the Operate light or Pause light is flashing. Otherwise, damage may occur.*

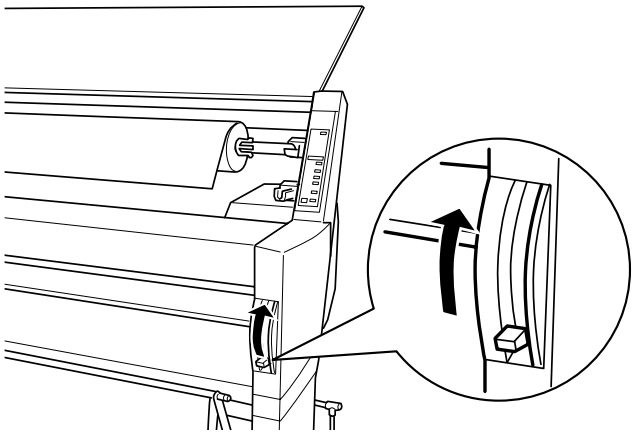

5. Load the paper into the paper insertion slot.

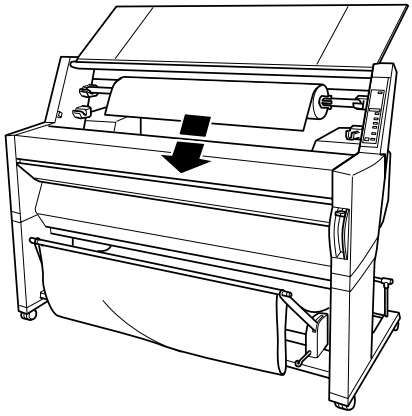

6. Pull the paper down through the paper insertion slot a small way.

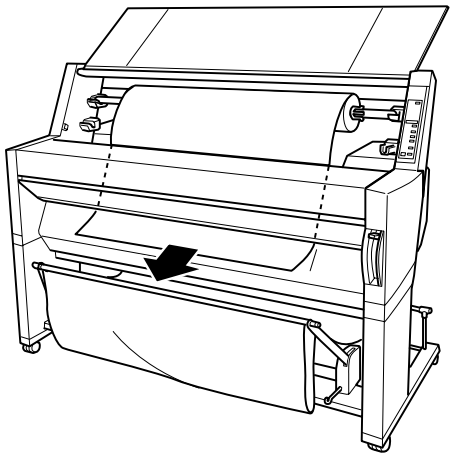

7. Roll back the roll paper to remove the slack. Make sure that the bottom edge of the paper is positioned straightly and in line with the rows of punch holes.

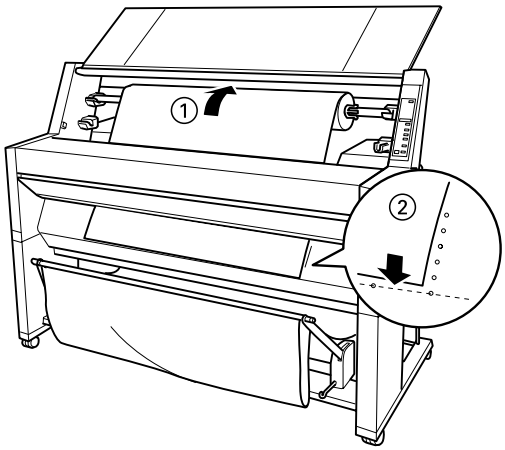

8. Push the paper set lever all the way down, then close the roll paper cover. PRESS PAUSE BUTTON appears.

Note:
If the Roll Auto Cut light is on, and the bottom edge of the roll paper was not cut properly after the previous print job, press the Cut/Eject *button to recut the edge.*

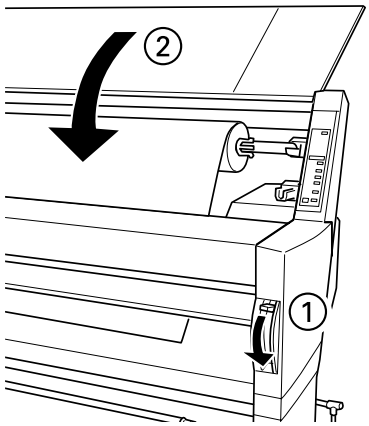

9. Press the Pause button.

   The print heads move and the paper feeds into the printing position. READY appears on the LCD panel.

   Note:
   Even if you do not press the Pause *button, the print heads move and paper feeds into the printing position automatically.* READY *appears on the LCD panel.*

   Now you are ready to print on roll paper. Make the printer driver settings, then send the print job. See "Printing From Your PC" on page 3-9 or "Printing From Your Macintosh" on page 3-14.

   Note:
   Allow time for the ink to dry thoroughly after printing to ensure the printout quality.

Loading cut sheet media

To load cut sheet media, follow the steps below.

Note:
If you are printing on thick paper (0.5 mm or thicker), see your Online Guide.

Caution:
Keep your fingers off the printable surface of the media, as fingerprints may reduce printout quality. Whenever possible, use gloves to load paper into the printer.

1. Make sure that the printer is on and the roll paper cover is closed.

2. Press the Paper Source button repeatedly until the Sheet light is on.

3. Make sure the Operate light or Pause light is not flashing, then pull the paper set lever all the way up. The Paper Out light turns on and LOAD PAPER appears on the LCD panel.

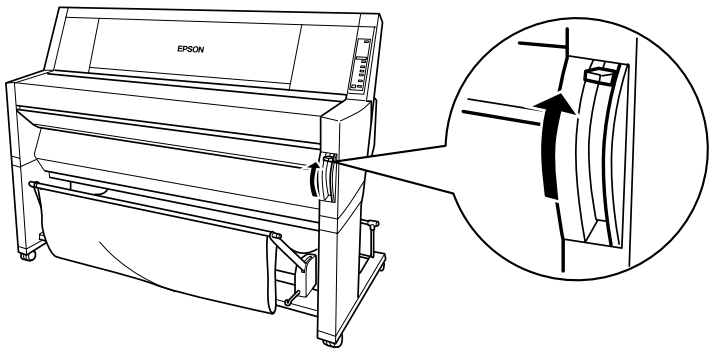

4. Load the sheet into the paper insertion slot until it comes out below. Make sure that the right and bottom edges of the paper are straight and in line with the rows of punch holes.

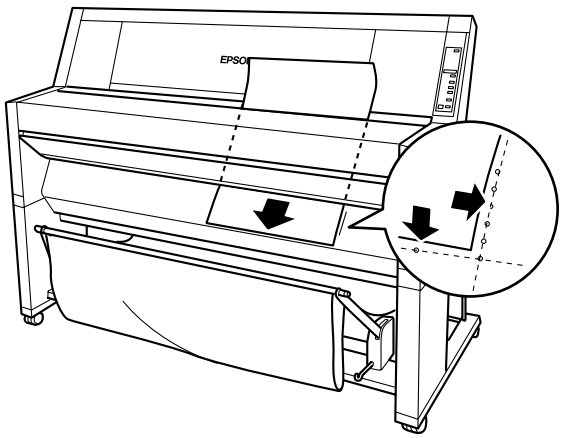

5. Push the paper set lever all the way down, PRESS PAUSE BUTTON appears.

Caution:
Do not move the paper set lever up while the Operate light or Pause light is flashing. Otherwise, damage may occur.

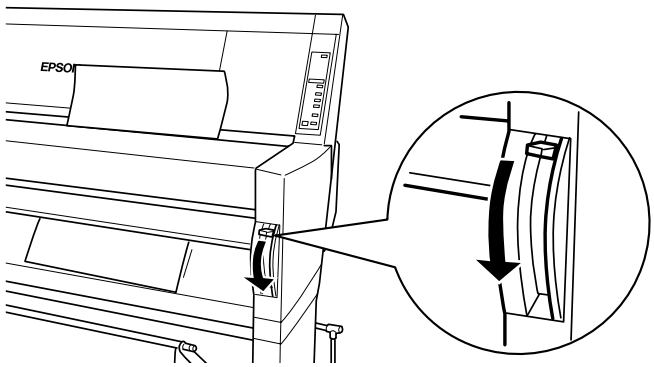

6. Press the Pause button.

The print heads move and the sheet feeds into the printing position. READY appears on the LCD panel.

Note:
Even if you do not press the Pause *button, the print heads move and paper feeds into the printing position automatically.* READY *appears on the LCD panel.*

Now you are ready to print on cut sheet media. Make the printer driver settings, then send the print job. See “Printing From Your PC” on page 3-9 or “Printing From Your Macintosh” on page 3-14.

Note:
Allow time for the ink to dry thoroughly after printing to ensure the printout quality.

Printing From Your PC

After loading the paper, you are ready to print your document from your PC.

Note:
To ensure the print quality, you may need to check the printer's condition before you start printing. See Chapter 4, "Checking the Printer's Condition".

Making the printer driver settings

To make the basic settings to print your documents, access the Main manu and Paper menu in the printer driver. In the Paper menu, you can set particular settings for printing on roll paper; Auto Rotate, Auto Cut, and Print Page Line.

For details about the printer software, see online help by pressing the Help button in the driver settings window.

1. Click Print on the File menu. The Print dialog box appears.

2. Make sure your printer is selected and then click Properties, or Options. You may need to click a combination of these buttons. The driver settings window appears.

3. Click the Main tab to display the Main menu.

4. Select the media you loaded in the printer from the Media Type list.

   Note:
   The Media Type setting determines what other settings are available, so you should always make this setting first.

5. In the Ink box, select Color to print in color, or Black to print in black and white.

6. Make sure the Automatic radio button in the Mode box is selected.

Note:
When Automatic is selected, the printer driver takes control of all detailed settings based on the current Media Type setting and Ink setting.

7. Adjust Speed and Quality in the Mode box if a slider appears. Drag the slider left or right depending on which is more important. This setting is usually automatically decided in accordance with your Media Type setting.

Note:
Depending on the Media Type you choose, a slider appears in the Mode box.

8. Click the Paper tab to display the Paper menu.

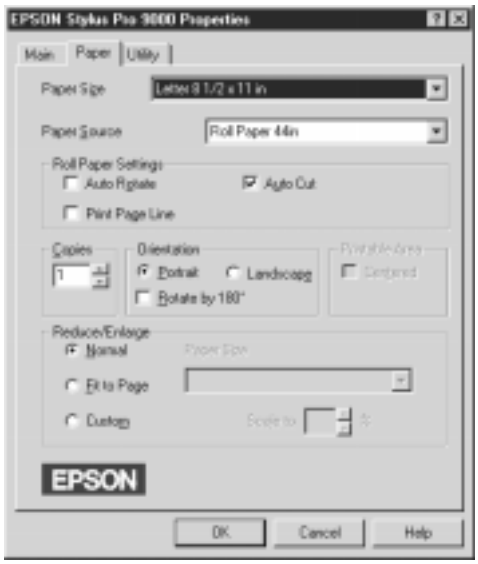

9. Select the paper size you loaded in the printer from the Paper Size list.

   Note:
   Most Windows applications feature paper size settings that override similar settings in the printer driver.

10. Select the type of paper you loaded in the printer from the Paper Source list.

11. When roll paper is used, set the Roll Paper Settings as required.

    Auto Rotate
    If your document length is shorter than the printable width of the roll paper, the document will be turned automatically by 90 degrees and printed crosswise when you select Auto Rotate. You can save paper by using this function.

    Auto Cut
    Roll paper will be cut automatically after printing one page when you select Auto Cut.

    Print Page Line
    Page lines will be printed on the right side and below the document for manual cutting when you select Print Page Line.

12. Make settings for Copies, Orientation, Printable Area, and Reduce/Enlarge boxes.

13. Click the OK button at the bottom of the window. You return to the Print dialog box (or a similar dialog box).

14. Click Close, OK, or Print to print. You may need to click a combination of these buttons.

While printing, the EPSON Progress Meter will appear, showing the printing progress and the status of your printer.

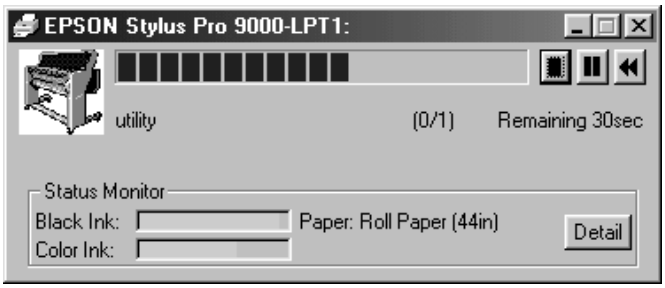

For details, see “Printer Software” in your *Online Guide.*

Cancelling printing from your PC

To cancel the printing in progress, press the Stop ( ) button on the EPSON Progress Meter.

You can also pause or restart printing. To pause printing, press the Pause ( ) button. To resume printing, press this button again. To restart printing, press the Reprint ( ) button.

Printing From Your Macintosh

After loading the paper, you are ready to print your document from your Macintosh.

Note:
To ensure the print quality, you may need to check the printer's condition before you start printing. See Chapter 4, "Checking the Printer's Condition".

Making the printer driver settings

To make the printer driver settings, follow the steps below.

For details about the printer software, see online help by pressing the Help (marked with "?") icon button in the driver setting dialog boxes.

Note:
While many Macintosh applications override the settings made in the printer driver, some do not, so you must verify the settings to get the results you expect.

1. Choose PAGE SETUP from the File menu. This brings up the Page Setup dialog box shown below.

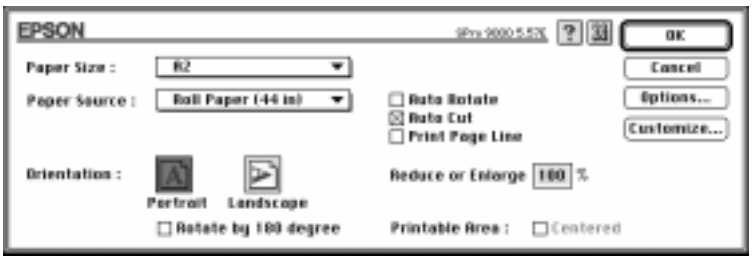

2. Select the paper size you loaded in the printer from the Paper Size list.

3. Select the type of paper you loaded in the printer from the Paper Source list.

4. When roll paper is used, set the Roll Paper Settings as required.

   Auto Rotate
   If your document length is shorter than the printable width of the roll paper, the document will be turned automatically by 90 degrees and printed crosswise when you select Auto Rotate. You can save paper by using this function.

   Auto Cut
   Roll paper will be cut automatically after a document is printed when you select Auto Cut.

   Print Page Line
   Page lines will be printed on the right side and below the document for manual cutting when you select Print Page Line.

5. Make settings for Orientation, Reduce or Enlarge, and Printable Area.

6. After making your settings, click the OK button to close the Page Setup dialog box.

   Note:
   You cannot print from the Page Setup dialog box. You can only print from the Print dialog box.

7. Choose Print from the File menu. The Print dialog box appears as shown below.

Note:
You can also open the Print dialog box by pressing the Options *button in the Page Setup dialog box.*

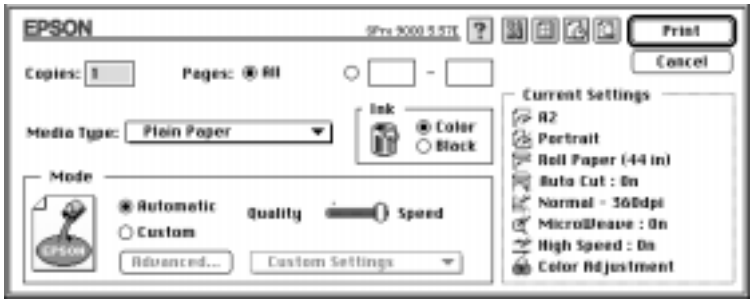

8. Select the media you loaded in the printer from the Media Type list.

   Note:
   The Media Type setting determines what other settings are available, so you should always make this setting first.

9. In the Ink box, select Color to print in color, or Black to print in black and white.

10. Make sure the Mode option is set to Automatic.

    Note:
    When Automatic is selected, the printer driver takes control of all detailed settings based on the current Media Type setting and Ink settings.

11. Adjust Speed and Quality in the Mode box if a slider appears. Drag the slider left or right depending on which is more important. This setting is usually automatically decided in accordance with your Media Type setting.

    Note:
    Depending on the Media Type you choose, a slider appears in the Mode box.

12. Be sure to make the settings for Copies and Pages, then click the Print button to start printing.

Cancelling printing from your Macintosh

When background printing is on

1. Press the Power button to turn off the printer.
2. Select EPSON Monitor3 from the application menu.

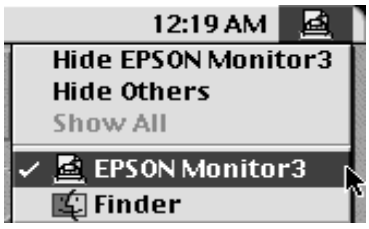

3. Click the button, then click the stop button to cancel the print job.

When background printing is off

1. Press the Power button to turn off the printer.

2. Hold down the ☐ key on your keyboard and press the [.] period key to cancel the print job.

Chapter 4

Checking the Printer's Condition

Using Printer Utilities 4-2
Accessing the printer utilities 4-2

Printing the Nozzle Check Pattern 4-3

Cleaning the Print Heads 4-4

Aligning the Print Heads 4-6

4

Using Printer Utilities

To ensure the print quality, you may need to check the printer's condition using the following utilities from the printer software.

Note:
You can also check from the printer's control panel. See "The Control Panel" in your Online Guide.

- ❏ Nozzle Check
- ❏ Print Head Cleaning
- ❏ Print Head Alignment

Accessing the printer utilities

To access the printer utilities, follow the steps below.

For Windows

1. Double-click the My Computer icon, then double-click the Printers folder.
2. For Windows 95 and 98, right-click your Printer icon, then click Properties. For Windows NT 4.0, right-click your Printer icon, then click Document Defaults. You see the printer software window.

For Macintosh

Click Print on the File menu of your application. Then click the utility icon in the Print dialog box.

Printing the Nozzle Check Pattern

You can check the print head nozzles from your computer with the Nozzle Check utility in the printer software.

Note:
Do not start the Nozzle Check utility while printing is in progress; otherwise, your printout may be marred.

Follow the steps below:

1. Make sure the printer is turned on and paper is loaded in the printer. (A3 or wider paper)
2. Access the printer software. See "Accessing the printer utilities" on page 4-2.
3. Click the Nozzle Check button.
4. Follow the messages on your screen.

The printer prints an operational check page including firmware (ROM) version information and a nozzle check pattern. The nozzle check pattern will resemble one of the two samples shown below:

Nozzle Check Pattern

Good condition: Print heads do not require cleaning.

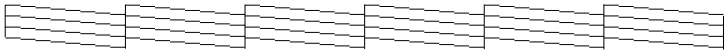

Poor condition: Print heads require cleaning.

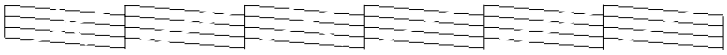

Note:
Actual tests are printed in color.

If any segments of printed lines are missing in your nozzle check pattern, ink nozzles are clogged and the print heads require cleaning.

Caution:
Make sure that the nozzle check pattern printing is complete before you start printing. Otherwise, print quality may decline.

Cleaning the Print Heads

You can execute the head clean from your computer using the Head Cleaning utility in the printer software, as explained in the following steps.

Note:

- *Print head cleaning uses ink. To avoid wasting ink, clean the print heads only if print quality declines.*
- *Use the Nozzle Check utility to confirm that the print heads need to be cleaned, as this uses only a little ink.*
- *When an Ink Out light is flashing (ink low) or on (ink out) in the printer, you cannot clean the print heads before replacing the appropriate ink cartridge first.*
- *Do not start the Head Cleaning or Nozzle Check utilities while printing is in progress; otherwise, your printout may be marred.*

Follow the steps below:

1. Make sure the lights on the control panel do not indicate that ink is low or ink is out.
2. Access the printer software. See “Accessing the printer utilities” on page 4-2.
3. Click the Head Cleaning button.

4. Follow the messages on your screen.

   The Pause light of the printer flashes during the cleaning cycle, which takes about three minutes to complete.

   Caution:
   Never turn off the printer until the cleaning cycle is finished and the Pause light has stopped flashing. Doing so may damage the printer.

5. When the Pause light is on, click Print nozzle check pattern (Windows) or the Confirmation button (Macintosh) in the Head Cleaning dialog box, or print a few lines from a document, to confirm that the heads are clean.

Nozzle Check Pattern

Good Condition: Print head clean was successful.

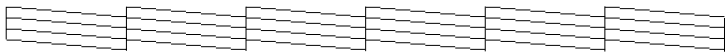

Poor condition: Print heads require further cleaning.

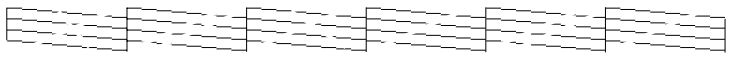

Note:
Actual tests are printed in color.

In the check pattern, if you find that segments are still missing from the test lines, you may need to repeat head cleaning and print the nozzle check pattern again.

If print quality does not improve even after repeating this procedure several times, contact your dealer.

Aligning the Print Heads

You can align the print heads using the Print Head Alignment utility in the printer software.

Note:

- ❑ *Do not start the Print Head Alignment utility while printing is in progress; otherwise, your printout may be marred.*
- ❑ *Alignment pattern printing requires 1.5 m roll paper.*

Follow the steps below:

1. Make sure the printer is turned on, and the EPSON special roll paper you plan to use is loaded in the printer. (297 mm or wider roll paper)

   Note:
   If you plan to use paper other than EPSON special paper, you may need to align the print heads using the SelecType settings. See "Paper Handling" in your Online Guide.

2. Access the printer software. See "Accessing the printer utilities" on page 4-2, depending on your system.

3. Click the Utility tab in the printer software window (Windows) or the utility icon in the Print or Page Setup dialog box (Macintosh), then click the Print Head Alignment button.

4. Follow the messages on your screen. The printer prints the head alignment patterns.

5. Choose the set number that has the smallest gap in each alignment pattern. In the example below, set number 4 has the smallest gaps.

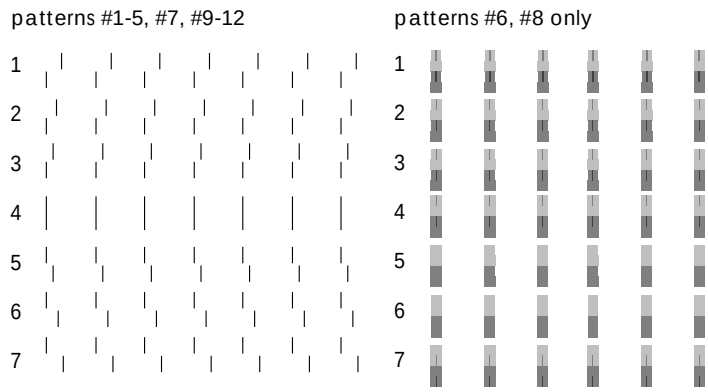

6. Select the number you chose in step 5 (for example, number 4), then click Finish.

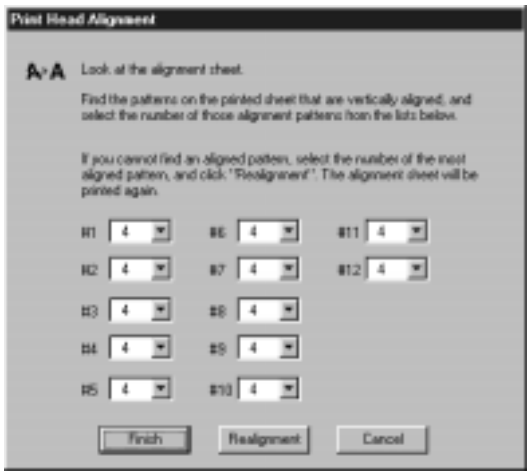

Note:
If the set with the smallest gap is unclear and cannot be selected, click the Realignment *button and repeat from step 5.*

Rev. C
A5 size CHAP4.FM
2/1/99 Pass 0
Miyazaki
Yamanouchi
Jacqueline

Chapter 5

Using an Optional Interface Card

Available Optional Interface Cards 5-2

Installing the Optional Interface Card 5-2

5

Available Optional Interface Cards

The optional Ethernet Interface Cards shown below let you use your printer on a network. The Ethernet card automatically detects the protocols on your network, so you can print from Windows 95, 98 and NT 4.0, and Macintosh on an AppleTalk network.

Type B Ethernet Interface Card (10BASE-T)	C82362✻
Type B Ethernet Interface Card (100BASE-TX)	C82363✻

Note:
The asterisk in the product number is a substitute for the last digit which varies by country.

Installing the Optional Interface Card

To install an optional interface card, follow these steps:

Note:
Before you install the optional interface card, see the documentation that comes with the card for setup information.

1. Make sure the printer is turned off.
2. Make sure that the power cord is unplugged from the electrical outlet.

Warning:
Do not install the interface card when the printer is connected to an electrical outlet, as damage may occur.

3. Disconnect the existing interface cable, if necessary.

4. Use a cross-head screwdriver to remove the two screws securing the shield plate to the optional interface slot; then lift off the plate. Be sure to keep the screws; you may need to use them again when you re-install the shield plate.

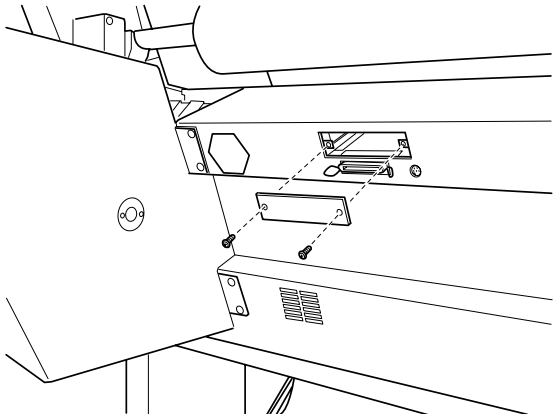

5. Set any DIP switches and jumpers on the card, if necessary. See the interface card's documentation for details.

6. Slide the interface card along the slots on both sides of the interface compartment. Push it in firmly to fully insert the connector at the rear of the interface card into the printer's internal socket.

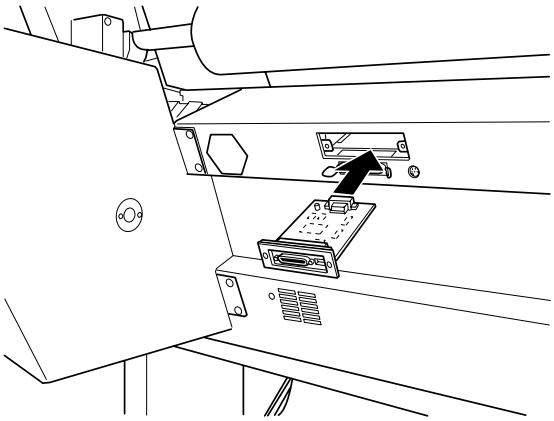

7. Secure the interface card in the slot with the two screws included with the interface card.

8. Connect a compatible interface cable to the interface card and to your computer. If the cable has a ground wire, secure it with one of the screws.

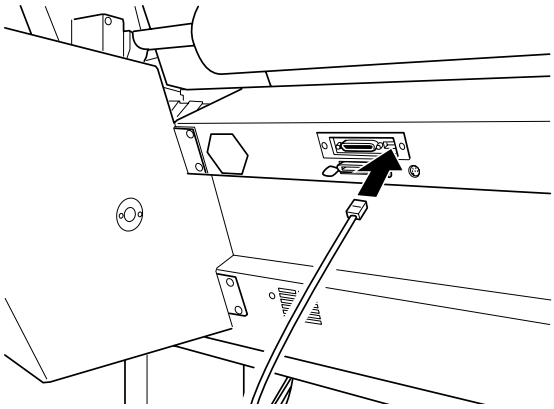

Also, if you are using more than one computer, reconnect the other interface cable.

9. Make sure the printer is turned off. Then plug in the power cord.

To remove an interface card, follow the above steps in reverse order.