EMCEE BROADCAST PRODUCTS, INC.

December 22, 1999

Federal Communications Commission
Equipment Approval Services
P.O. Box 358315
Pittsburgh, PA 15251-5315

Gentlemen:

EMCEE Broadcast Products requests certification of the Models TUA100FA 100 Watt UHF Power Amplifier and TTU100FA 100 Watt UHF Television Transmitter in accordance with Part 74, Subpart G of the Commission's Rules and Regulations.

Enclosed is a copy of the EMCEE engineering report describing the equipment and test procedures utilized to confirm compliance with the regulations applicable to Low Power Television, Television Translator and TV Booster Stations. Also included is the TUA100FA Amplifier instruction manual which contains the required circuit descriptions, alignment procedures, and technical specifications. Two checks, each in the amount of $475, to cover the filing fees are also enclosed.

If any further information is required to expedite this application, please feel free to call me at 570-443-9575 or 800-233-6193.

Sincerely,

Robert G. Nash
VP/Director of Engineering

P.O. Box 68 ● Susquehanna St. Ext. ● White Haven, PA 18661 ● 570-443-9575 ● 800-233-6193 ● FAX 570-443-9257
E-Mail: infosales@emceebrd.com * Internet www.emceebrd.com

Certification Submission for the Model TUA100FA 100 Watt UHF Power Amplifier and Model TTU100FA 100 Watt UHF Television Transmitter per Part 74, Subpart G, of the FCC Rules and Regulations

EMCEE Broadcast Products
PO Box 68
White Haven, PA 18661-0068

TABLE OF CONTENTS

SECTION PAGE

I. INTRODUCTION
1.1 General 1-1
1.2 Personnel Qualifications 1-1
1.3 Test Equipment 1-1
1.4 Active Device List 1-2
1.5 Certification of Data 1-3

II. TEST PROCEDURES AND DATA
2.1 Frequency Response 2-1
2.2 Attenuation Characteristics 2-4
2.3 Differential Phase and Gain 2-7
2.4 Envelope Delay 2-10
2.5 Aural Occupied Bandwidth 2-13
2.6 Aural Distortion 2-16
2.7 Aural Frequency Response 2-18
2.8 Amplitude Modulation Noise 2-20
2.9 Frequency Modulation Noise 2-22
2.10 Antenna Terminal Radio Frequency Voltage 2-24
2.11 Spurious Radiation Field Strength 2-26
2.12 Power Output Meter Calibration 2-28
2.13 Frequency Stability . . . . . N/A
2.14 Type Acceptance Identification Label 2-30
2.15 Photographs 2-31

SECTION I

1.0 INTRODUCTION

1.1 General

This report contains data required for certification of the EMCEE Model TUA100FA UHF Television Power Amplifier. This amplifier, which will be manufactured in quantity, is intended for use with any type accepted 20 watt LPTV transmitter or 20 watt translator, particularly the EMCEE Models TTU20F and TU20F. Using two parallel LDMOS power transistors in a single amplifier module, the TUA100FA is rated to provide 100 watts peak visual and 10 watts average aural power on any specified UHF channel extending from 470MHz to 806MHz. The data contained in this report was obtained from tests performed on an EMCEE production unit having an output frequency of UHF channel 65 (776-782MHz) using a TTU20F LPTV Transmitter as its 20 watt driver. A complete list of the test equipment utilized to obtain the certification data can be found in Section 1.3 of this report. Information relating to the description, operation and maintenance of the amplifier can be found in the TUA100FA Instruction Manual. Information concerning the TTU20F transmitter, including modulators, may be found in its previously submitted type acceptance report (BMTTTU20F Grant 1/22/96).

1.2 Personnel Qualifications

The certification tests were conducted under the supervision of Robert Nash, EMCEE VP/Director of Engineering. Mr. Nash has 23 years of experience in the development and testing of television transmitters and translators.

1.3 Test Equipment

1. Antenna, Adjustable Dipole Set, 30MHz-1GHz, Model 3121, EMCO
2. Antenna, Conical Helix, 1-11GHz, Model ALN108B, AEL
3. Attenuator, 10dB, Model 766-10, Narda
4. Attenuator, 20dB, Model 766-20, Narda
5. Attenuator, 30dB, Model 766-30, Narda
6. Attenuator, 30dB, 150W, Model 769-30, Narda
7. Distortion Measurement Set, Model 339A, Hewlett Packard
8. Demodulator, Model 1450, Tektronix
9. Directional Coupler, 30dB, Model 3001-30, Narda

10. Diode Detector, 50 ohm, Model 8553, Telonic Berkeley

11. Envelope Delay Measuring Set, Model 201/1, Shibasoku

12. Mixer, Model ZAD-2, Mini-Circuits

13. Modulator, Model EM1, EMCEE

14. Multimeter, Digital, Model E2378A, Hewlett Packard

15. NTSC Vectorscope, Model 520, Tektronix

16. NTSC Video Generator, Type 149A, Tektronix

17. Power Meter, Model 435A, Hewlett Packard

18. Spectrum Analyzer, Model 8594E, Hewlett Packard

19. Waveform Monitor, Model 1485R, Tektronix

20. 20 Watt LPTV Transmitter, Model TTU20F, EMCEE

21. 100 Watt Power Amplifier, Model TUA100FA, EMCEE

1.4 Active Device List

The following is a complete listing of all the active devices used in the EMCEE Model TUA100FA UHF Power Amplifier. The devices are grouped together as seen on each specific schematic or interconnection diagram. Given with each device is its schematic designator, EMCEE part number and function.

DEVICE	PART #/DESIGNATOR	FUNCTION
100 Watt UHF Amplifier Schematic Diagram 40383163		
Integrated Circuit	MC1723CD/U1	Current Regulator
Transistor	PTF10159/Q1, Q2	RF Amplifier

1.5 Certification of Data

Having supervised the tests and compilation of information in this report, I certify that all statements and test results submitted for certification of the EMCEE TUA100FA are true and correct to the best of my knowledge.

Robert G. Nash
VP/Director of Engineering

SECTION II
TEST PROCEDURES AND DATA

2.1 Frequency Response [73.687(a)(1)]

Test Equipment Setup	Figure 2–1A
Visual Output Power	100 watts peak sync
% Video Modulation	87.5%
Type Video Modulation	Standard sync with a variable frequency sine wave occupying the interval between pulses. Sine-wave axis was maintained at 50% of the peak sync amplitude. Sine-wave amplitude was held constant at less than 75% of the peak output voltage.
Aural Output Power	0 watts
Method of Measurement	Sine-wave frequency was varied through the video range. The data recorded was relative to the 200kHz sideband amplitude designated as 0dB.

Frequency Response Data

REFERENCE LEVEL: 0dB = 200kHz sideband amplitude

Output Freq. (MHz) Channel 65	Sidebands	Relative Output (dB) Channel 65
772.50	−4.75MHz	−55.0
773.07	−4.18MHz	−49.0
773.67	−3.58MHz	−45.0
775.25	−2.0MHz	−35.0
776.00	−1.25MHz	−25.0
776.50	−750kHz	−1.5
776.75	−500kHz	−0.5
777.25	VISUAL CARRIER	
777.45	+200kHz REFERENCE	0.0
777.75	+500kHz	−0.1
778.50	+1.25MHz	−0.5
779.25	+2.00MHz	−0.7
780.25	+3.00MHz	−0.6
780.83	+3.58MHz	−0.5
781.43	+4.18MHz	−0.8
782.00	+4.75MHz	−30.0
782.85	+5.6MHz	−48.0

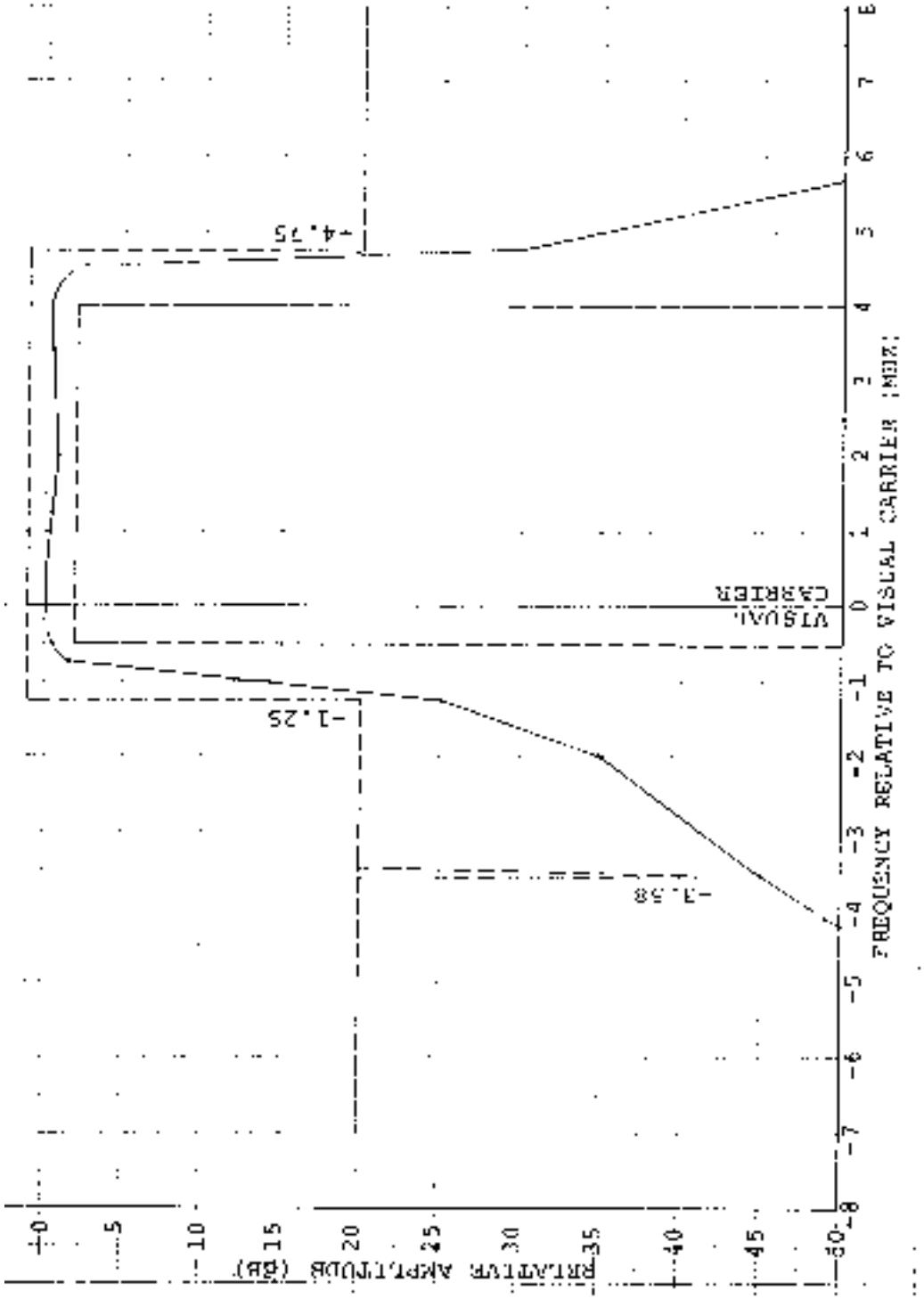

AMPLITUDE VS. FREQUENCY CHARACTERISTICS
Figure 2–1

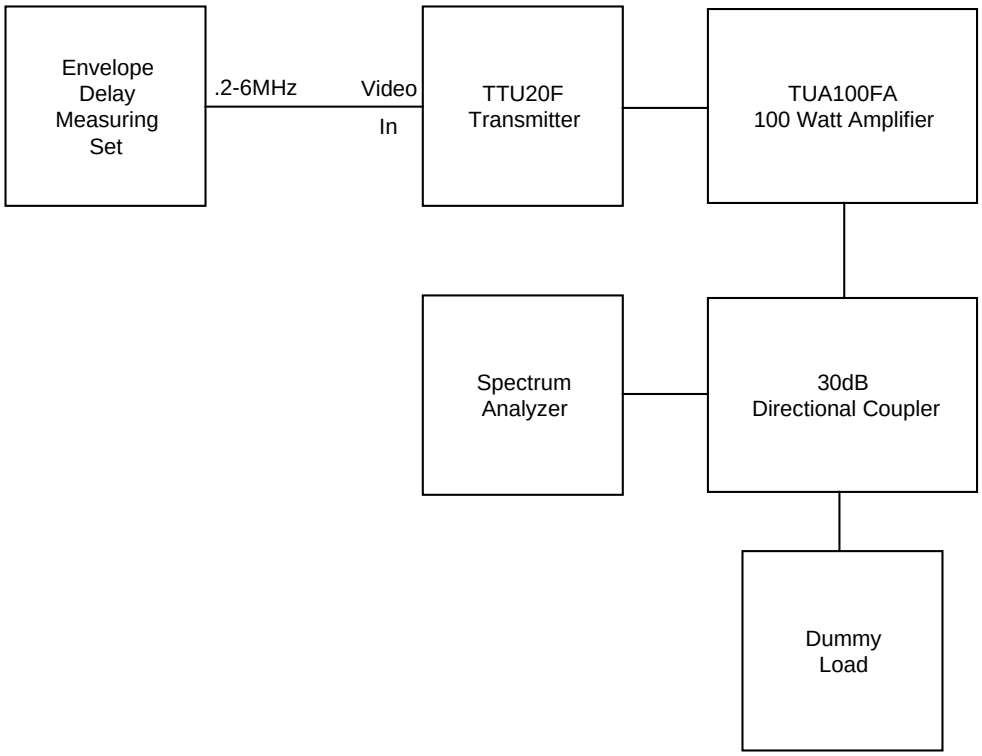

FREQUENCY RESPONSE TEST SETUP
Figure 2-1A

2.2 Attenuation Characteristics [73.687(a)(2)]

Test Equipment Setup	Figure 2–2A
Visual Output Power	100 watts peak
% Video Modulation	87.5%
Type Video Modulation	Standard sync with a variable frequency sine wave occupying the interval between pulses. Sine-wave axis was maintained at 50% of the peak sync amplitude. Sine-wave amplitude was held constant at less than 75% of the peak output voltage.
Aural Output Power	0 watts
Method of Measurement	Sine-wave frequency was varied through the video range. The data recorded was relative to the 200kHz sideband amplitude designated as 0dB.

ATTENUATION CHARACTERISTICS DATA

MODULATION FREQ. (MHz)	RECTIFIED OUTPUT (dB)
0.20	0.0
0.50	−0.3
0.75	−1.3
1.25	−6.3
2.10	−6.5
3.00	−6.3
3.58	−6.1
4.18	−6.5

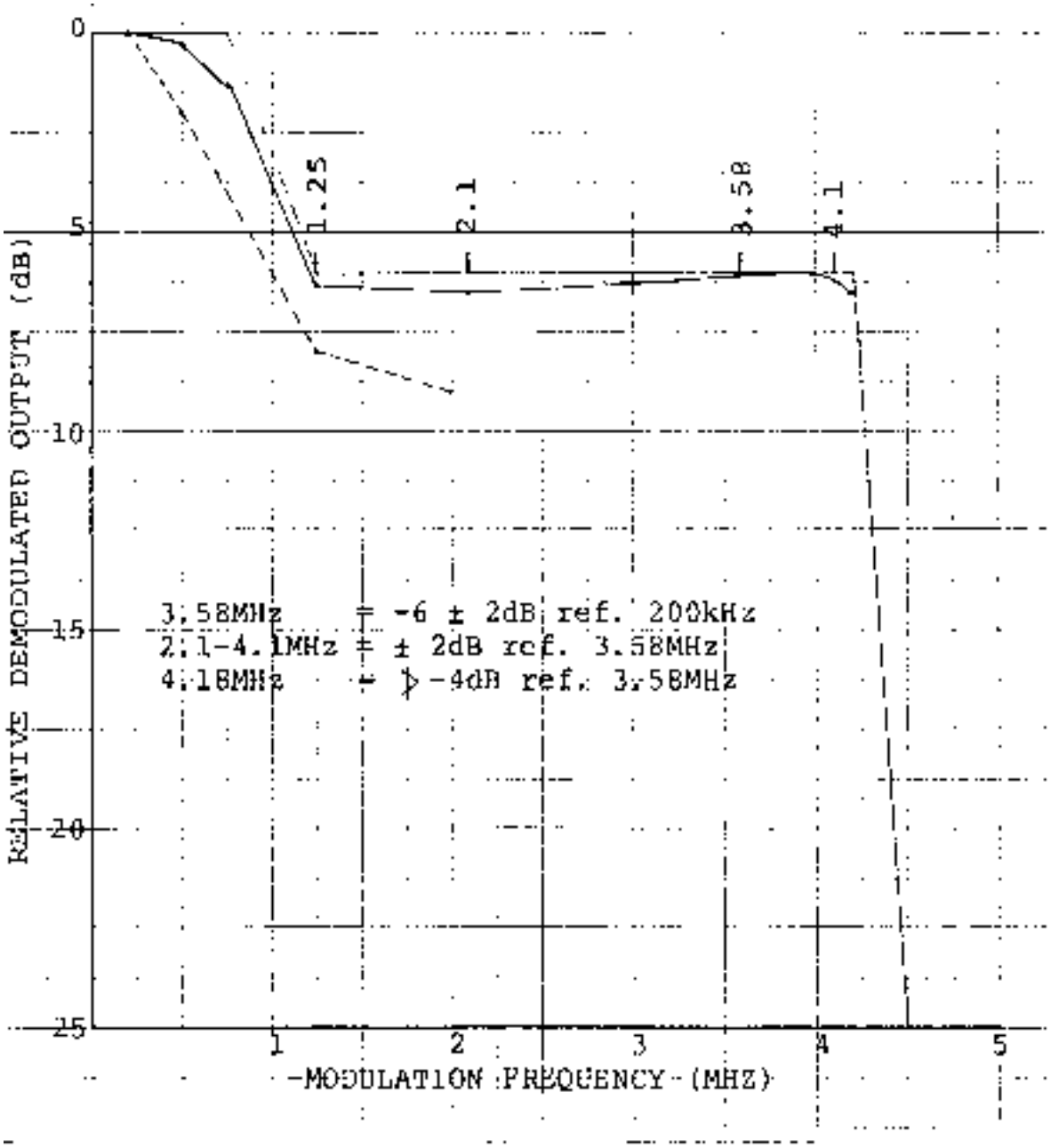

ATTENUATION CHARACTERISTIC CURVE
Figure 2–2

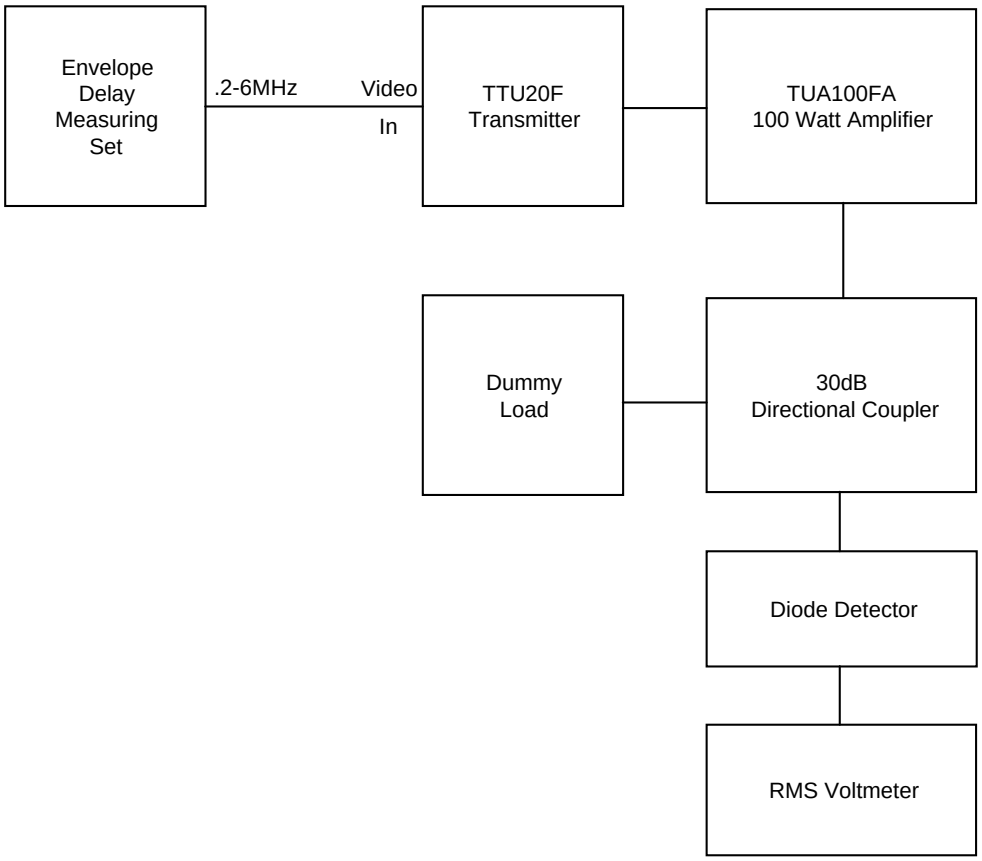

ATTENUATION CHARACTERISTICS TEST SETUP
Figure 2-2A

2.3 Differential Phase and Gain [73.682(a)(20)(vii)]

Test Equipment Setup	Figure 2–3A
Visual Output Power	100 watts peak
% Video Modulation	87.5%
Type Video Modulation	Standard 5-riser stairstep modulated with 3.58MHz color subcarrier
Aural Output Power	10 watts average
% Aural Modulation	0%
Method of Measurement	Data was taken from the demodulated output viewed on a waveform monitor after passing through an internal chroma filter.

DIFFERENTIAL PHASE AND GAIN DATA

Differential Gain = 2.8%

Differential Phase = 0.94°

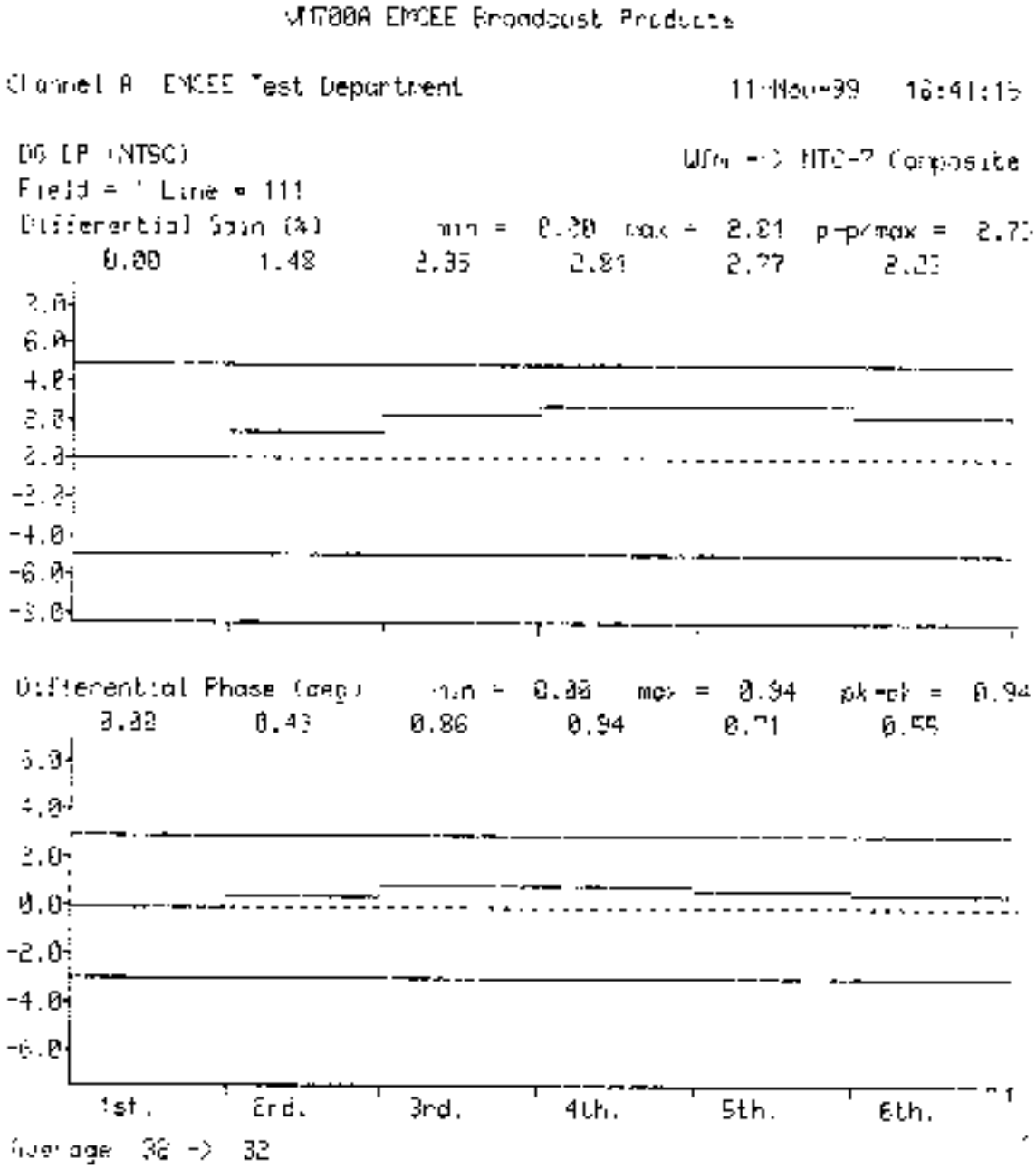

DIFFERENTIAL GAIN/DIFFERENTIAL PHASE

Figure 2–3

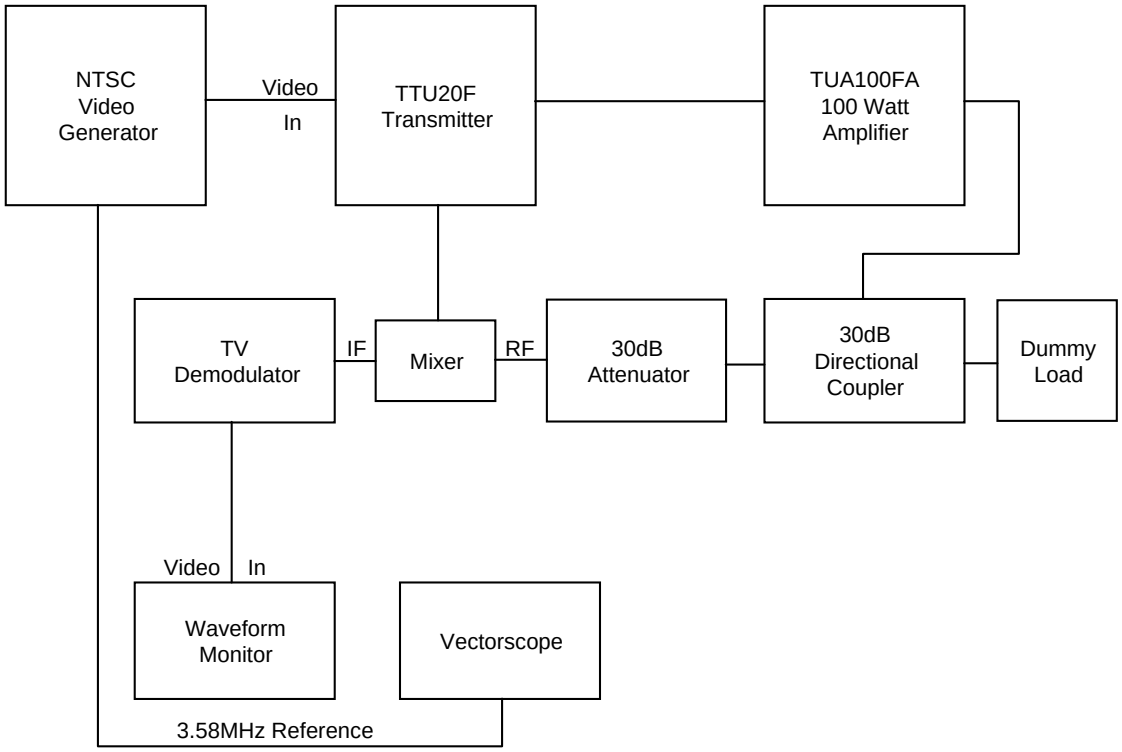

DIFFERENTIAL PHASE AND GAIN TEST SETUP
Figure 2-3A

2.4 Envelope Delay [73.687(a)(3)]

Test Equipment Setup	Figure 2–4A
Visual Output Power	100 watts peak
% Video Modulation	87.5%
Type Video Modulation	A variable frequency constant amplitude sine-wave with a 200kHz reference signal provided by the envelope delay test equipment
Aural Output Power	0 watts
Method of Measurement	The sine-wave was varied through the video range and the delay data was read from the CRT display of the Envelope Delay Measuring Set.

ENVELOPE DELAY VERSUS FREQUENCY DATA

FREQUENCY	ENVELOPE DELAY (ns)
200kHz	0
500kHz	+25
1.0MHz	+27
1.5MHz	+12
2.1MHz	–10
2.5MHz	–6
3.0MHz	–18
3.2MHz	–66
3.4MHz	–109
3.58MHz	–176
4.0MHz	–296
4.18MHz	–330

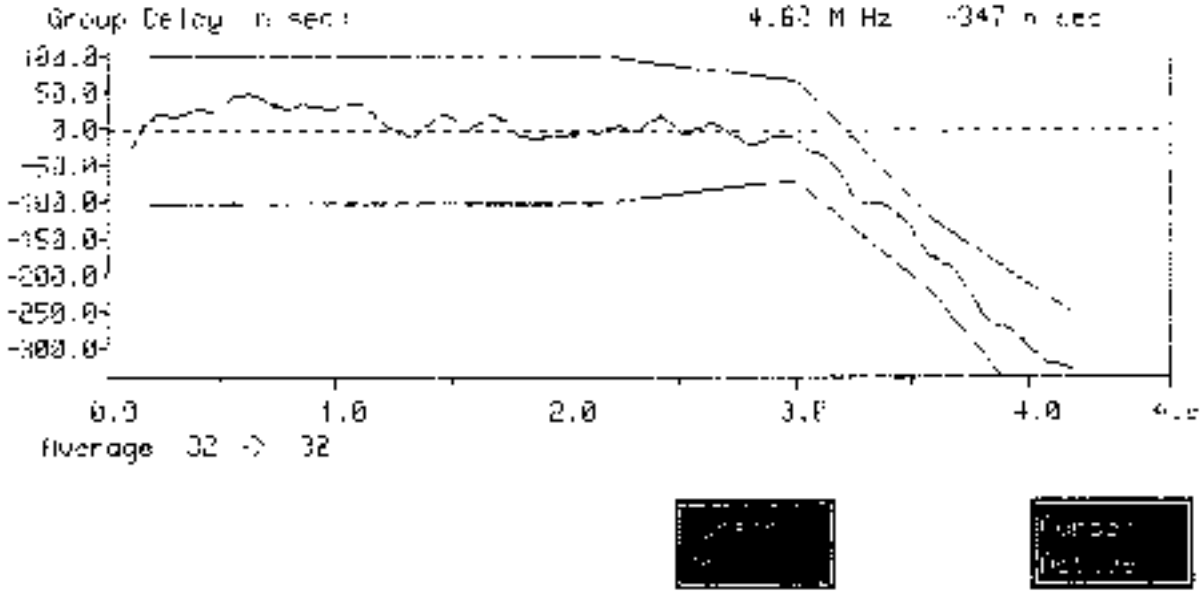

ENVELOPE DELAY

Figure 2–4

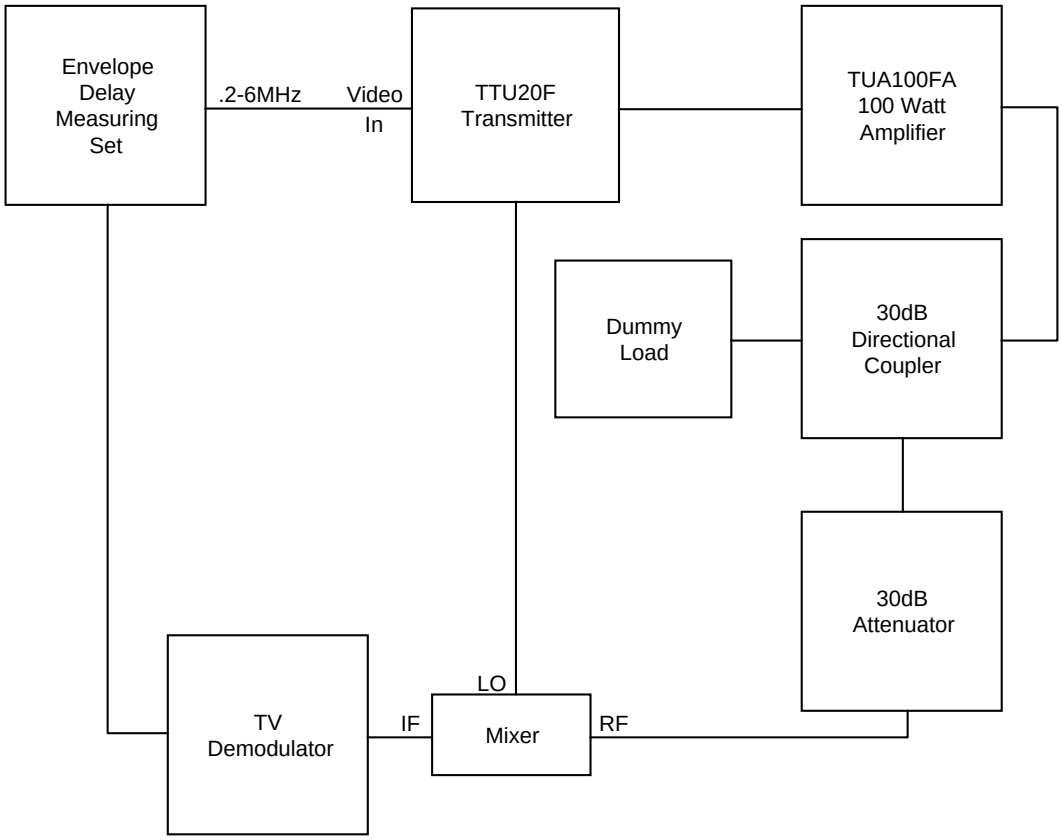

ENVELOPE DELAY TEST SETUP
Figure 2-4A

2.5 Aural Occupied Bandwidth [2.989(e)(5)]

Test Equipment Setup	Figure 2–5A
Visual Output Power	100 watts peak
% Video Modulation	0%
Aural Output Power	10 watts average
% Aural Modulation	85% (21.25kHz)
Aural Modulation Signal	15kHz
Method of Measurement	Spectrum Analyzer set at 3kHz resolution, 15kHz/division frequency span and 5ms/division sweep speed. Bandwidth was read at 0.5% (−23dB) of mean power.

AURAL OCCUPIED BANDWIDTH DATA

Bandwidth ≈ 90kHz

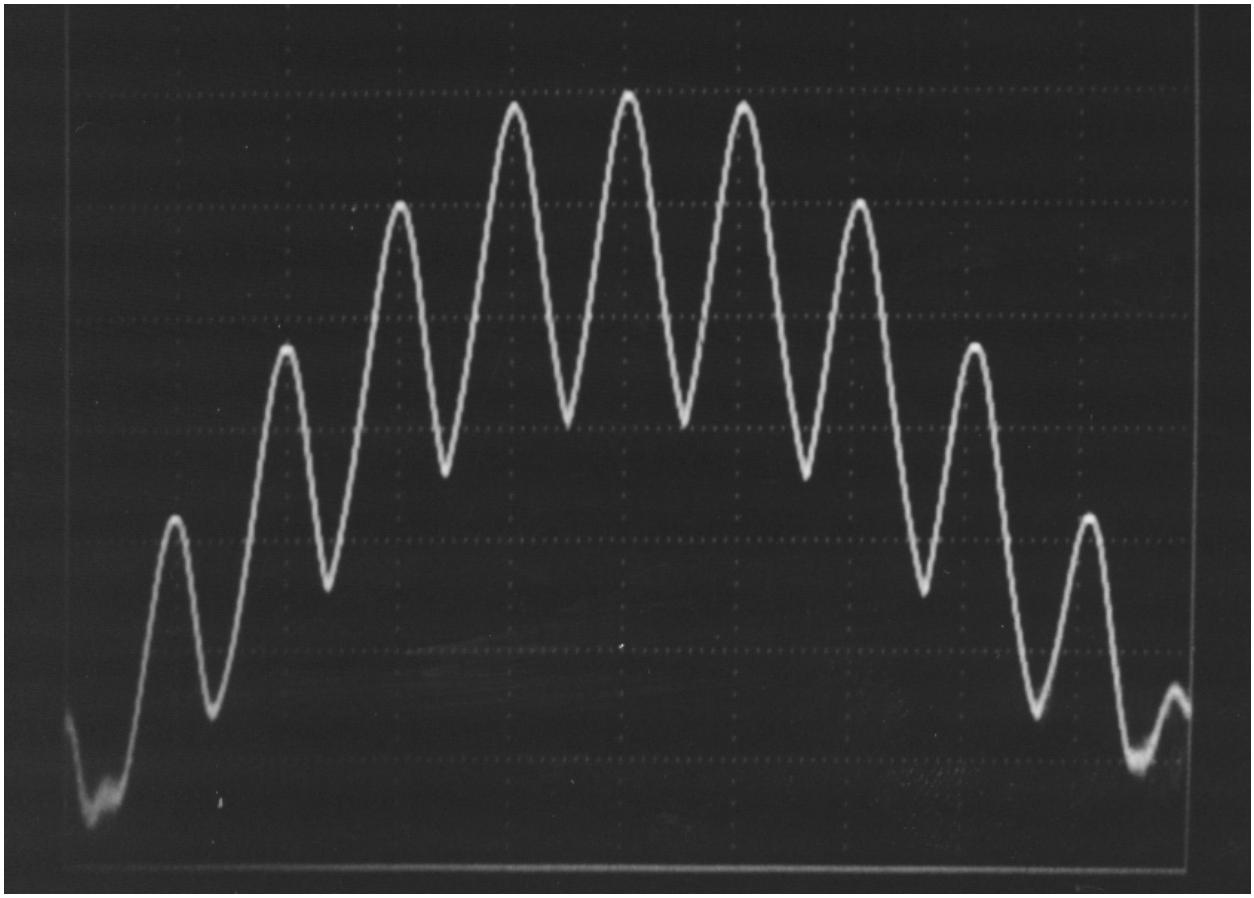

AURAL OCCUPIED BANDWIDTH
Figure 2–5

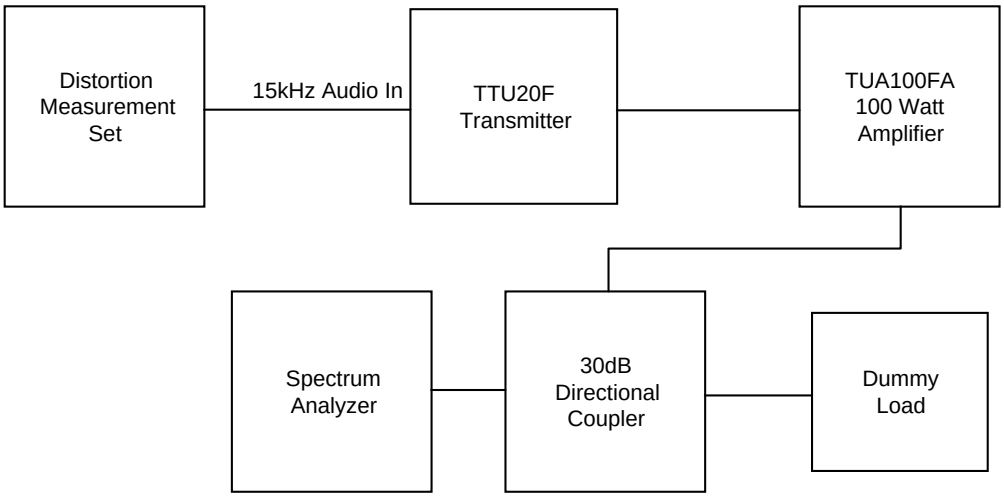

AURAL OCCUPIED BANDWIDTH TEST SETUP
Figure 2-5A

2.6 Aural Distortion [73.687(b)(3)]

Test Equipment Setup	Figure 2–6A
Visual Output Power	100 watts peak
% Video Modulation	87.5%
Type Video Modulation	Standard 10 riser stairstep
Aural Output Power	10 watts average
% Aural Modulation	100%, 50%, 25%
Aural Modulation Signal	Variable audio sine-wave from 50Hz to 15kHz
Method of Measurement	The aural modulation frequency was varied at three different % modulation levels and a distortion measurement was noted for each frequency-modulation combination.

AURAL DISTORTION DATA

FREQUENCY	% DISTORTION		
Hz	100% MOD	50% MOD	25% MOD
50	0.39	0.41	0.44
100	0.34	0.36	0.40
400	0.31	0.32	0.37
1000	0.28	0.30	0.36
5000	0.25	0.29	0.35
7500	0.27	– – –	– – –
10000	0.30	– – –	– – –
15000	0.36	– – –	– – –

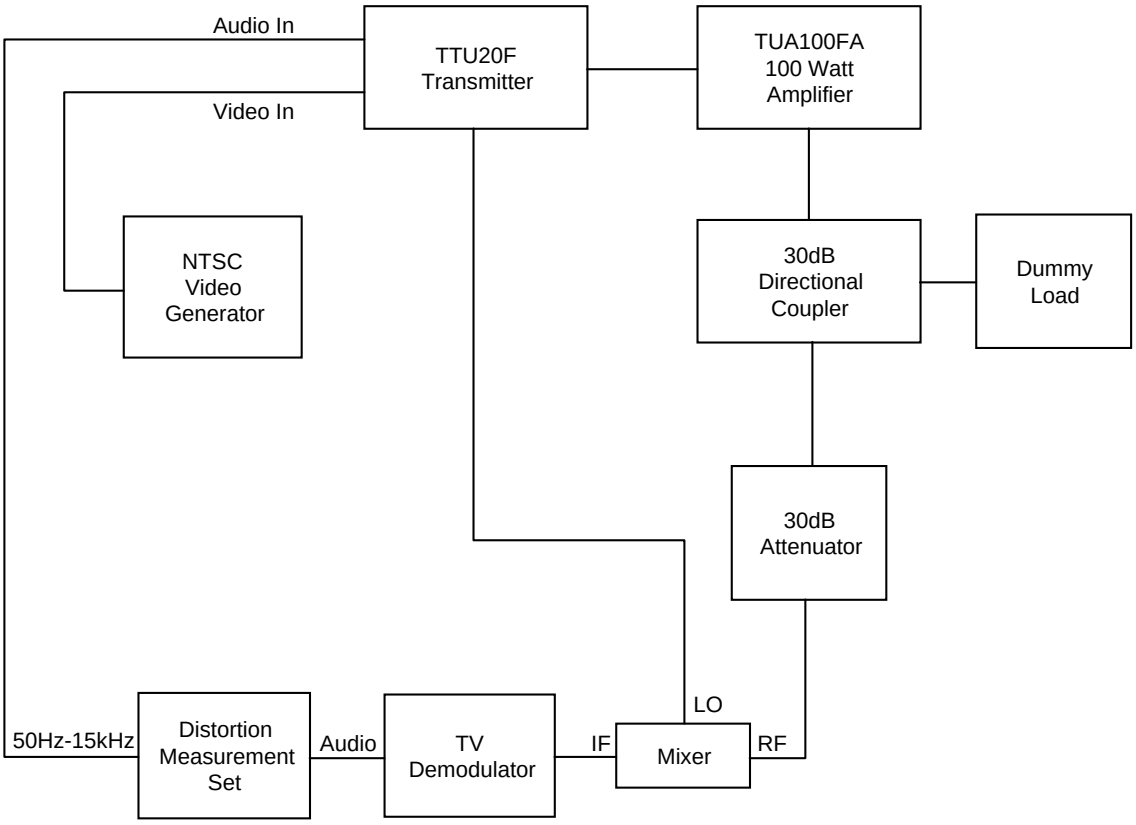

AURAL DISTORTION TEST SETUP
Figure 2-6A

2.7 Aural Frequency Response [73.687(b)(2)]

Test Equipment Setup	Figure 2–7A
Visual Output Power	100 watts peak
% Video Modulation	87.5%
Type Video Modulation	Standard 10 riser stairstep
Aural Output Power	10 watts average
% Aural Modulation	100%, 50%, 25%
Aural Modulation Signal	50 to 15,000Hz
Method of Measurement	The audio input was adjusted at each audio frequency to maintain a constant modulation level. Modulation input variations were plotted directly from the dB scale of the Distortion Test Set Meter.

AURAL FREQUENCY RESPONSE DATA

FREQUENCY	OUTPUT LEVEL RELATIVE TO 1000Hz (dB)		
Hz	100% MOD	50% MOD	25% MOD
50	–1.6	–1.7	–1.8
100	–1.2	–1.4	–1.4
400	–0.8	–1.0	–1.1
1000	0	0	0
3000	+4.0	+3.8	+3.7
5000	+7.5	+7.4	+7.2
7500	+10.5	+10.3	+10.2
10000	+13.0	+12.8	+12.8
15000	+16.1	+15.9	+15.7

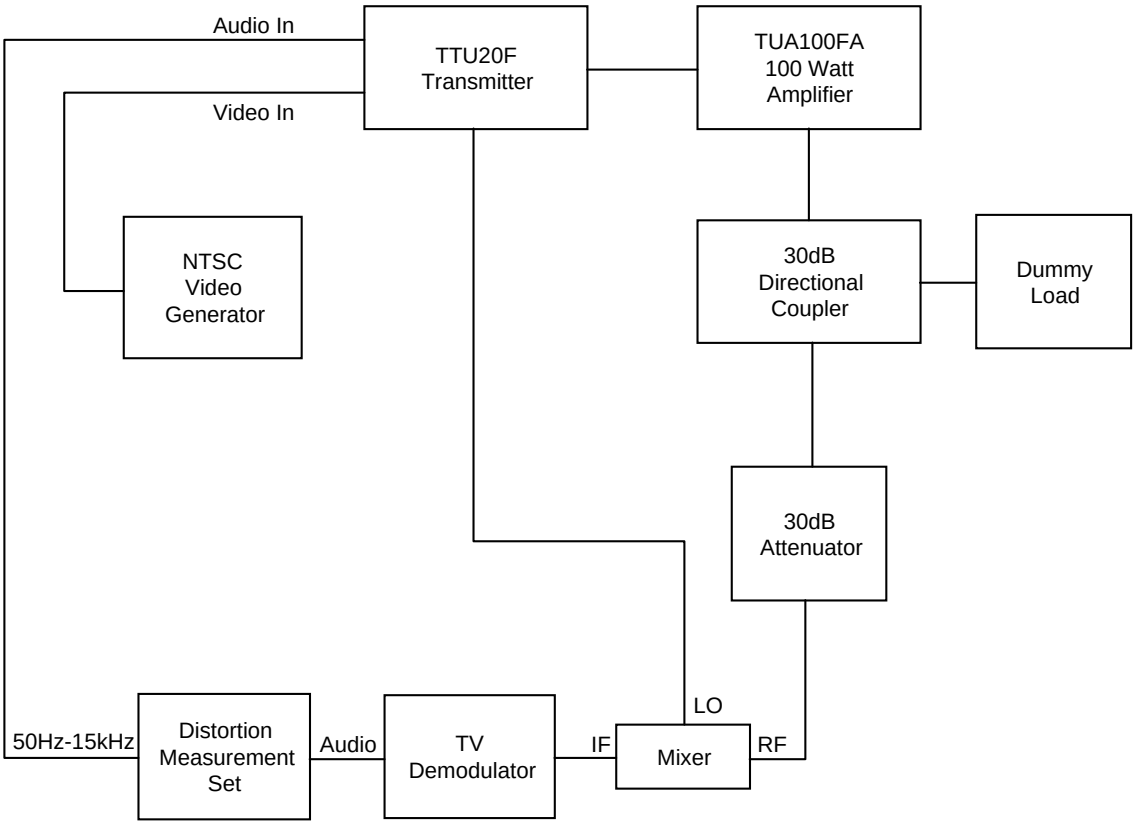

AURAL PREEMPHASIS TEST SETUP
Figure 2-7A

2.8 Amplitude Modulation Noise [73.687(b)(5)]

Test Equipment Setup	Figure 2–8A
Visual Output Power	0 watts
Aural Output Power	10 watts average
% Aural Modulation	100%
Aural Modulation Signal	400Hz
Method of Measurement	AC RMS and DC readings were taken to compute the signal to noise ratio shown below. An RC network was used with the RMS voltmeter to roll off noise above 15kHz.

AM NOISE DATA

AC Output = 1.9mV

DC Output = 1.7V

AM Noise = $20 \log \frac{\text{AC Output}}{\text{DC Output}} = \frac{.0019\text{V}}{1.7\text{V}}$

AM Noise = −59.0dB

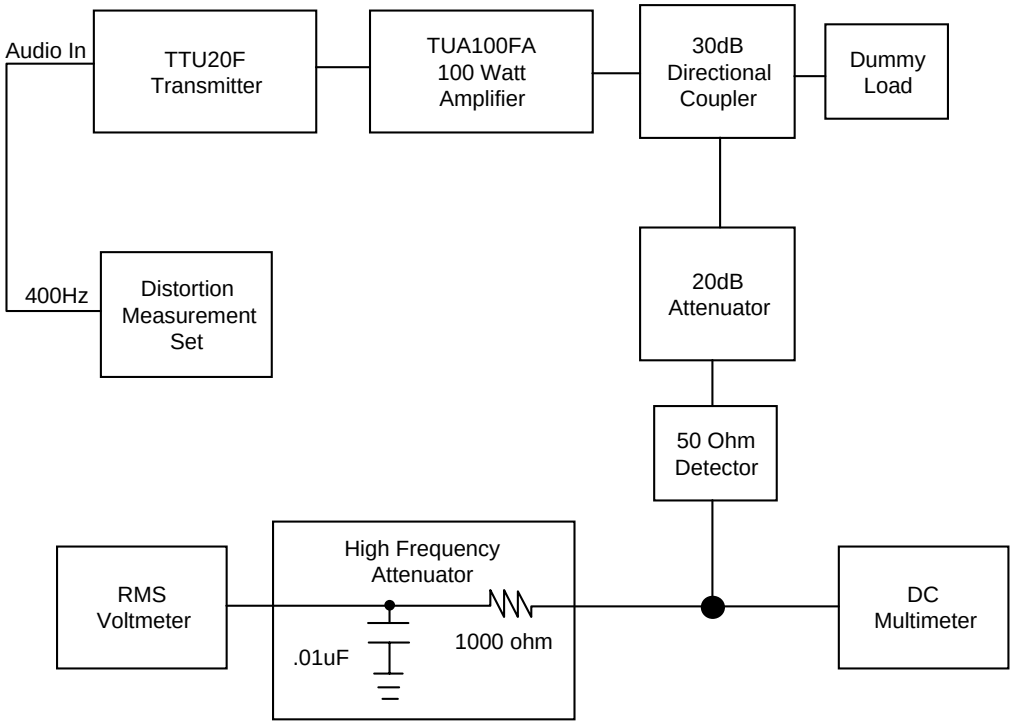

AM NOISE TEST SETUP
Figure 2-8A

2.9 Frequency Modulation Noise [73.687(b)(4)]

Test Equipment Setup	Figure 2–9A
Visual Output Power	0 watts
Aural Output Power	10 watts average
% Aural Modulation	100% and 0%
Aural Modulation Signal	400Hz
Method of Measurement	With aural modulation applied, a reading was obtained from the Distortion Measurement Set RMS voltmeter. With modulation removed, a new reading was recorded. The signal to noise calculation was checked against the dB scale of the RMS voltmeter.

FM NOISE DATA

Detected Output w/o modulation = 2.5mV

Detected Output w/modulation = 2.9V

$$\text{FM Noise} = 20 \log \frac{\text{Output w/o modulation}}{\text{Output w/modulation}} = \frac{.0025\text{V}}{2.9\text{V}}$$

FM Noise = −61.3dB

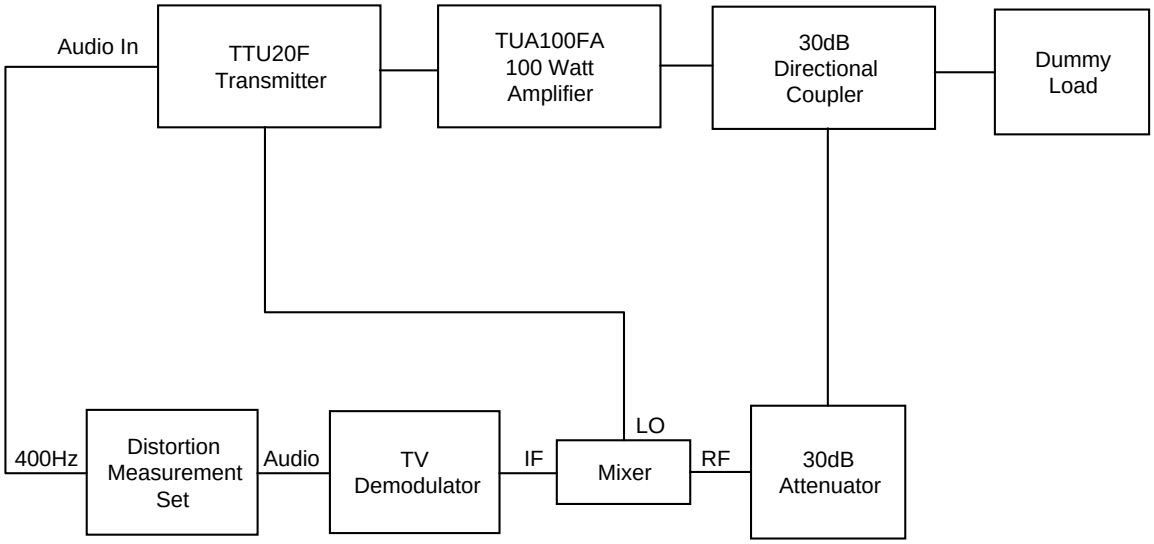

FM NOISE TEST SETUP
Figure 2-9A

2.10 Antenna Terminal Radio Frequency Voltage [74.736(c)(iii)]

Test Equipment Setup	Figure 2–10A
Visual Output Power	100 watts peak
% Video Modulation	87.5%
Type Video Modulation	Standard 10 riser stairstep
Aural Output Power	10 watts average
% Aural Modulation	0%
Method of Measurement	The spectrum analyzer display was adjusted for a zero reference level at the visual carrier using the following settings:

Frequency Span/Division	–	1MHz
Resolution Bandwidth	–	30kHz
Time/Division	–	10ms
Input Attenuation	–	30dB
Reference Level	–	–12dB
Video Filter	–	Off

All emissions were checked relative to peak sync from 0 to 10.0GHz. Those emissions below –80dB were not noted.

ANTENNA TERMINAL RF VOLTAGE DATA

FREQUENCY (MHz)	LEVEL (dB relative to peak visual)	
777.25	0dB	Visual Carrier
781.75	–10dB	Aural Carrier
772.75	–56dB	Visual Carrier –4.5MHz
786.25	–60dB	Aural Carrier +4.5MHz
768.25	–60dB	Visual Carrier –9.0MHz
790.75	–62dB	Aural Carrier +9.0MHz
823.00	–61dB	Visual Carrier +45.75MHz
1554.50	–62dB	Visual 2nd Harmonic
1563.50	–67dB	Aural 2nd Harmonic

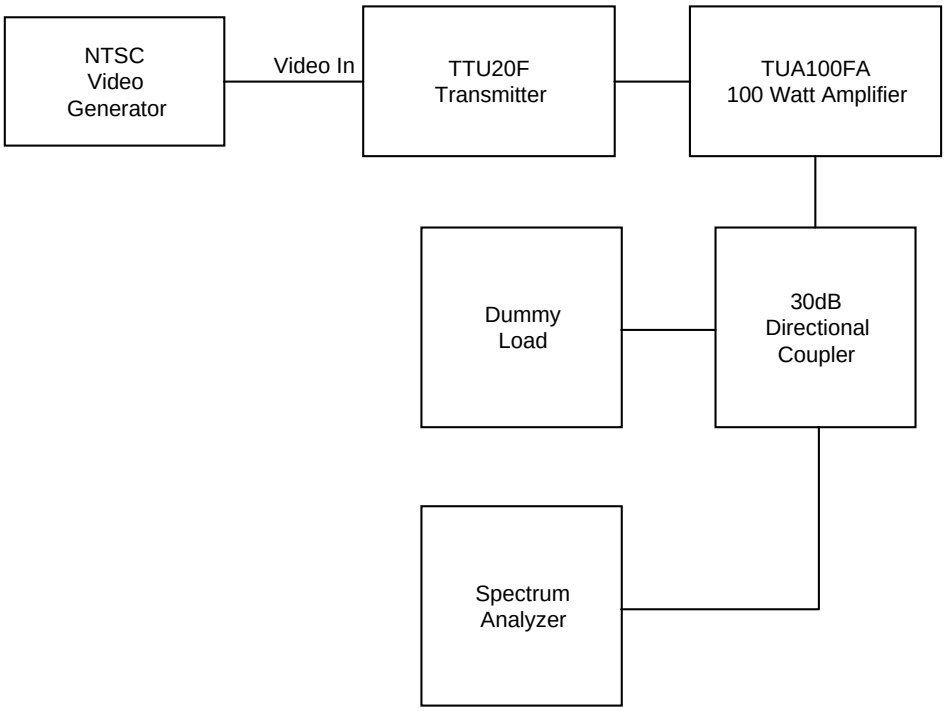

ANTENNA TERMINAL RF VOLTAGE TEST SETUP
Figure 2-10A

2.11 Spurious Radiation Field Strength [2.993]

Test Equipment Setup	Figure 2–11A
Visual Output Power	100 watts peak
% Video Modulation	87.5%
Type Video Modulation	Standard 10 riser stairstep
Aural Output Power	10 watts average
% Aural Modulation	0%
Method of Measurement	The broadband receive antennas were moved horizontally and vertically around the unit to maximize receive level. Absolute power level of each spurious radiation was measured on a calibrated spectrum analyzer and converted to an equivalent field strength by finding the power density (absolute power divided by the antenna area). The relative field strength of the spurious radiation was then calculated with respect to the unit's rated output power. The field strength of the rated output was found using $\sqrt{49.2P}/R$ (P = rated output, R = distance). All emissions were assumed to be radiated from half-wave dipoles. Frequencies scanned extended from 20MHz to 10.0GHz.

SPURIOUS RADIATION FIELD STRENGTH DATA

$$E\ Output = \sqrt{49.2P}/R = \sqrt{(49.2)(100)}/10 = 7.01 \text{Volts/Meter}$$

FREQUENCY (MHz)		POWER MEASURED (dBm)	EQUIVALENT FIELD STRENGTH (VOLTS/METER)	RELATIVE FIELD STRENGTH (dB)
Visual	777.25	–53	9.85×10^{-3}	–57.0dB
Aural	781.75	–62	3.52×10^{-3}	–66.0dB
LO	823.00	Not Visible	– – – – – –	– – – –
2nd Harmonic	1554.50	Not Visible	– – – – – –	– – – –

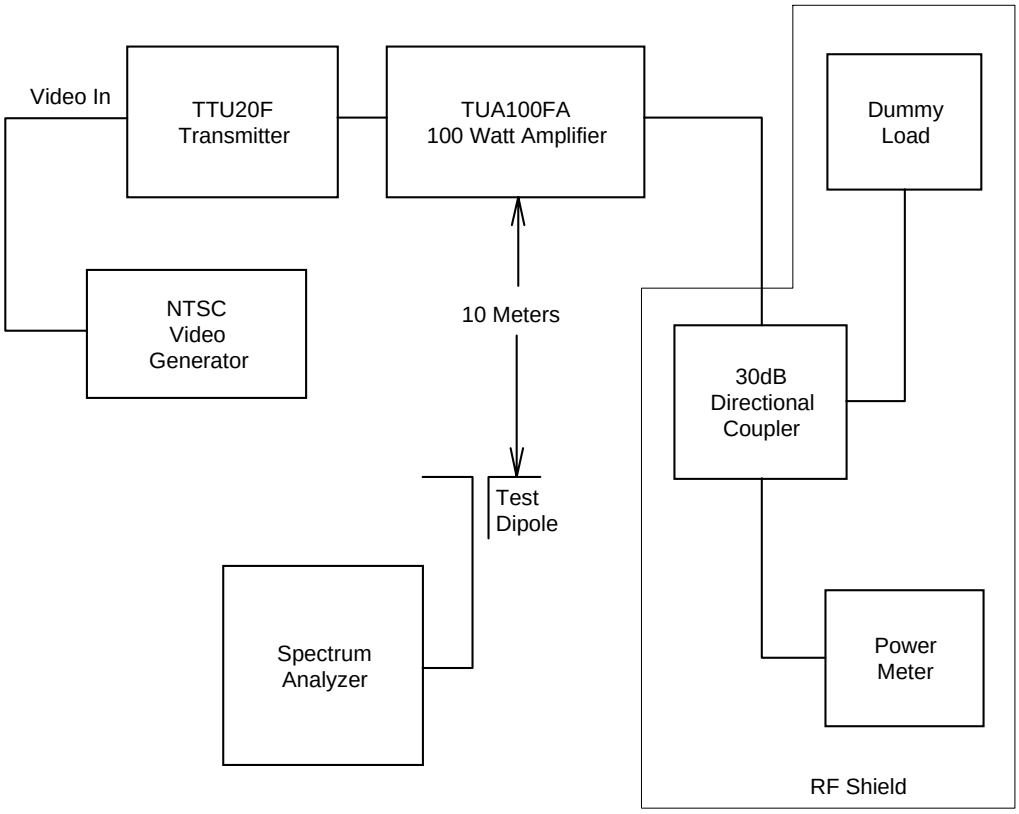

SPURIOUS CABINET RADIATION TEST SETUP
Figure 2-11A

2.12 Power Output Meter Calibration [2.985]

Test Equipment Setup	Figure 2–12A
Visual Output Power	100 watts peak
% Video Modulation	87.5%
Type Video Modulation	Standard sync with blanking level set at 75% of peak sync and maintained through the interval between pulses.
Aural Output Power	10 watts average
% Aural Modulation	0%
Method of Measurement	The TTU20F Driver was adjusted to obtain a 59.5mW average visual reading from the TUA100FA Amplifier. This power level corresponds to 100 watts peak power when using the factor of 1.68 and compensating for the output attenuation as shown:

[59.5mW]	x	[10^3]	x	[1.68] = 100W
meter reading		attenuation		power factor

The modulator's aural level was then adjusted to obtain a 69.5mW indication on the external power meter (59.5W average visual + 10W average aural –30dB = 69.5mW).

The VIS MTR (R9) control of the Metering Detector circuit, located on the right side wall of the TUA100FA Amplifier drawer, was adjusted to provide a 100% indication on the % POWER meter with the meter switch set to the FWD position.

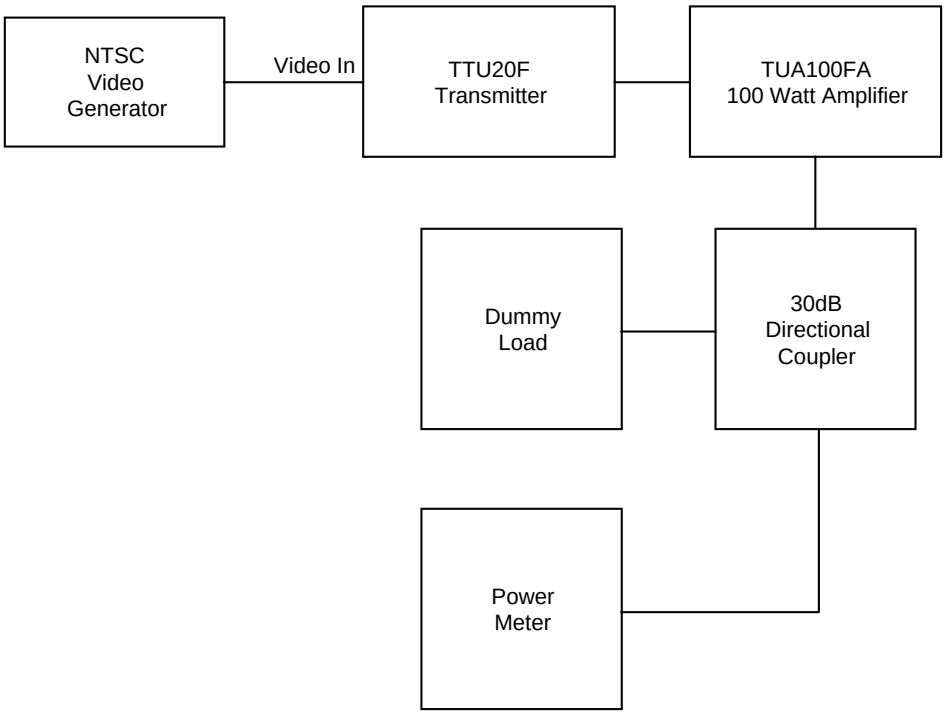

POWER OUTPUT METER CALIBRATION TEST SETUP
Figure 2-12A

2.14 Certification Identification Label [2.1003]

The certification identification labels for the aforementioned models are shown below. These labels shall be displayed conspicuously on the front panel of the appropriate unit.

FCC ID. BMTTUA100FA

FCC TYPE CERTIFIED AMPLIFIER
WARNING
DO NOT EXCEED 100 WATT
PEAK VISUAL RATING

EMCEE Broadcast Products, White Haven, PA.

FCC ID. BMTTTU100FA

FCC TYPE CERTIFIED AMPLIFIER
WARNING
DO NOT EXCEED 100 WATT
PEAK VISUAL RATING

EMCEE Broadcast Products, White Haven, PA.

Figure 2–14

2.15 Photographs [2.983 (g)]

The following photographs will be used as part of the TUA100FA Instruction Manual.

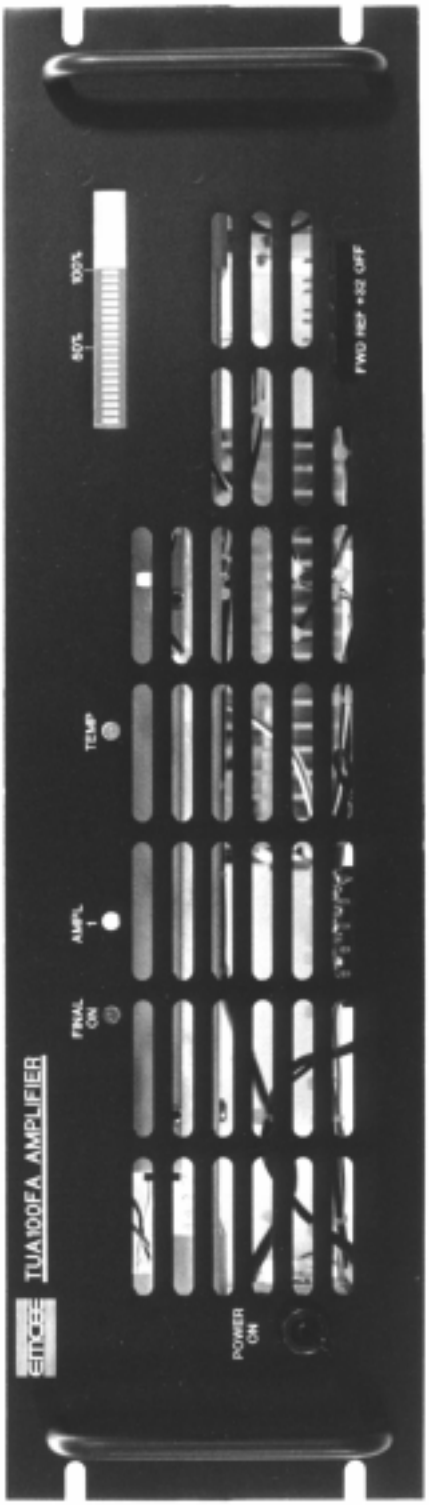

TUA100FA Amplifier Front View

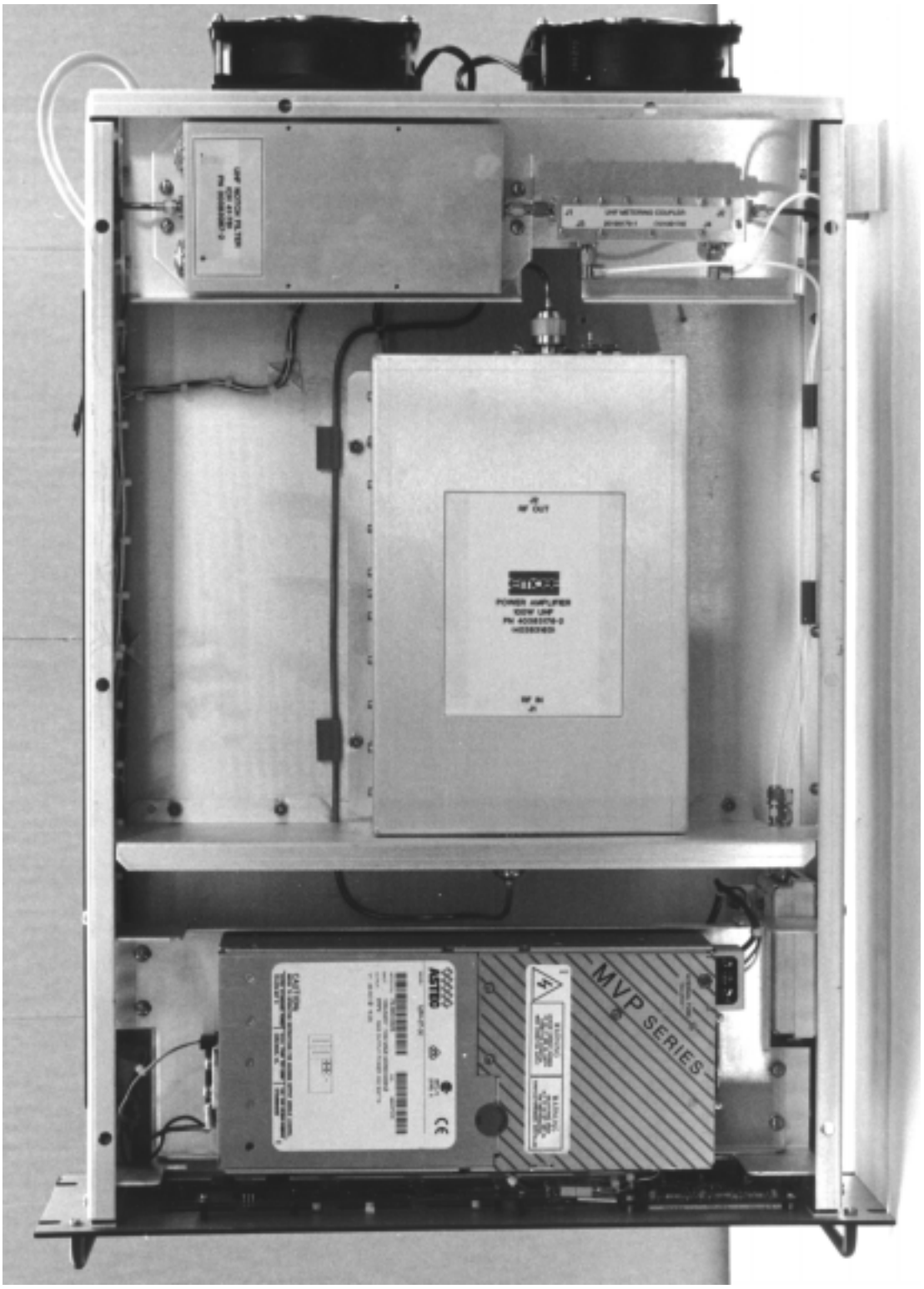

TUA100FA Amplifier Internal View

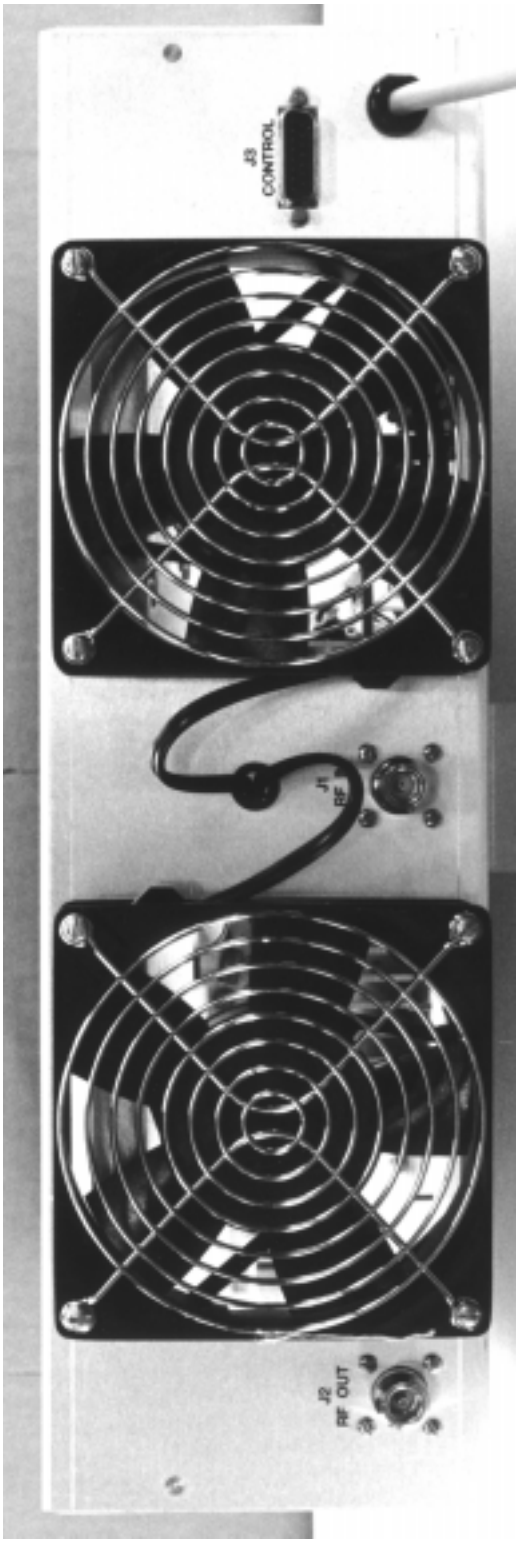

TUA100FA Amplifier Rear View

NOTES: UNLESS OTHERWISE SPECIFIED.

1-MARK REV LEVEL PER SHT 1 OF 1 AND A232-107-3.

3-WHEN TESTING, REMOVE C43, C57, C66, AND C67, PLACE THEM ACROSS GAP LEADING TO TEST POINT. (TP1, TP2, TP3, TP4)

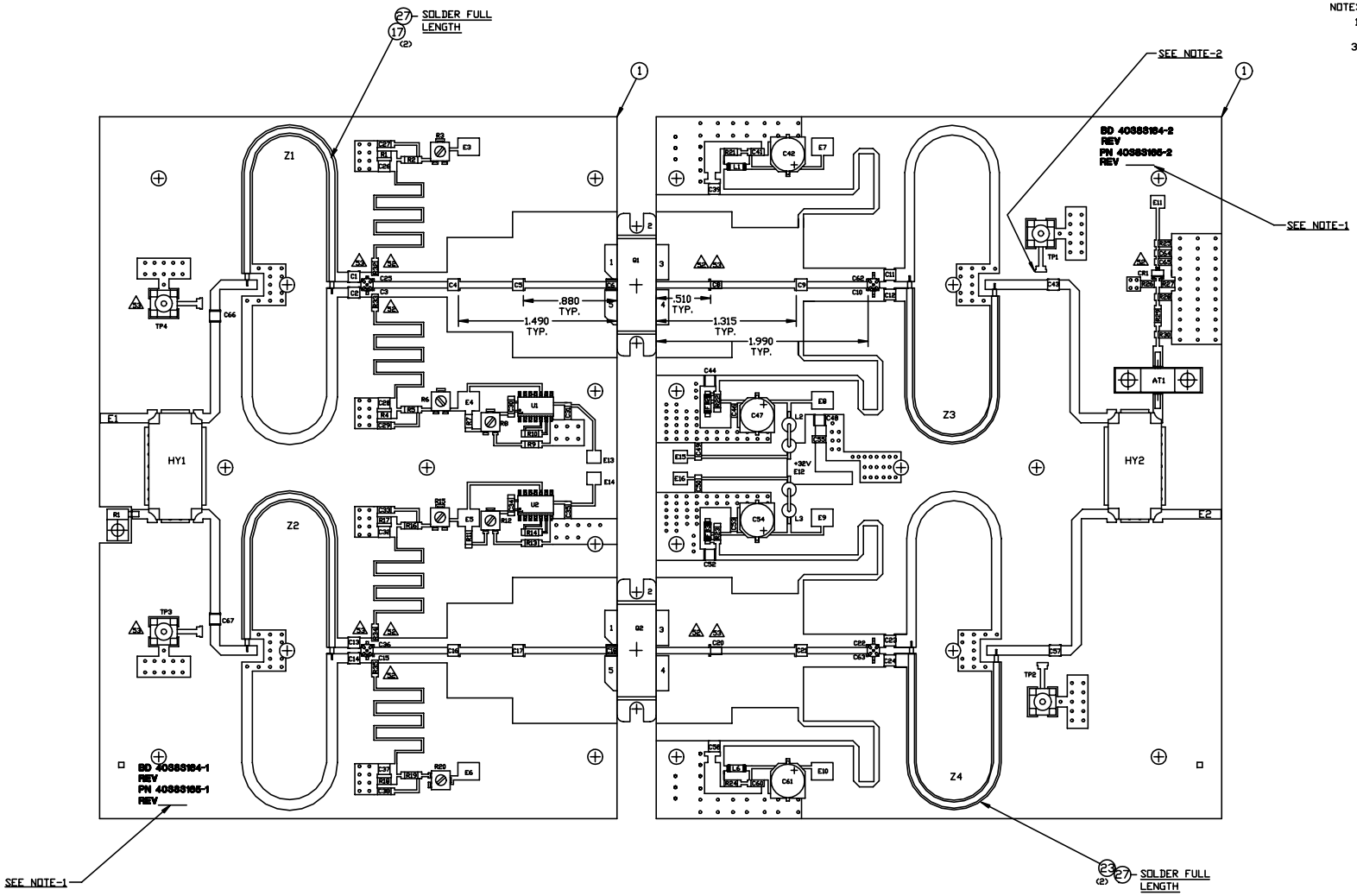

REV: 53 (-1) PCB ASSY., 100W AMPL, (INPUT)

REV: 53 (-2) PCB ASSY., 100W AMPL, (OUTPUT)

ECN	DATE	BY		CHK	CHK	APPV'L
EM 234	10/14/99	A.C.	MADE CHANGES PER ENG. MEMO			
EM 227	4/13/99	A.C.	ITEM 12 WAS PN NACE100M508X10 MADE CHANGES PER ENG. MEMO 227	A.C.		

NEXT ASSY:	DRAFT	12/14/98	A.C.
	DR. CHK		
VERSION	M. ENGR		
MODEL	E. ENGR		
SCALE	RELEASE		

TOLERANCES - EXCEPT AS NOTED
DECIMAL .XX ± .010 .XXX ± .005
FRACTIONAL ± 1/64"
ANGULAR ± 1/2 DEG

EMCEE BROADCAST PRODUCTS INC.
WHITE HAVEN, PA. 18661

PCB ASSEMBLY, 100 WATT AMPLIFIER 470-800MHz

40383165 REV SEE DASH No.

SHEET 1 OF 1

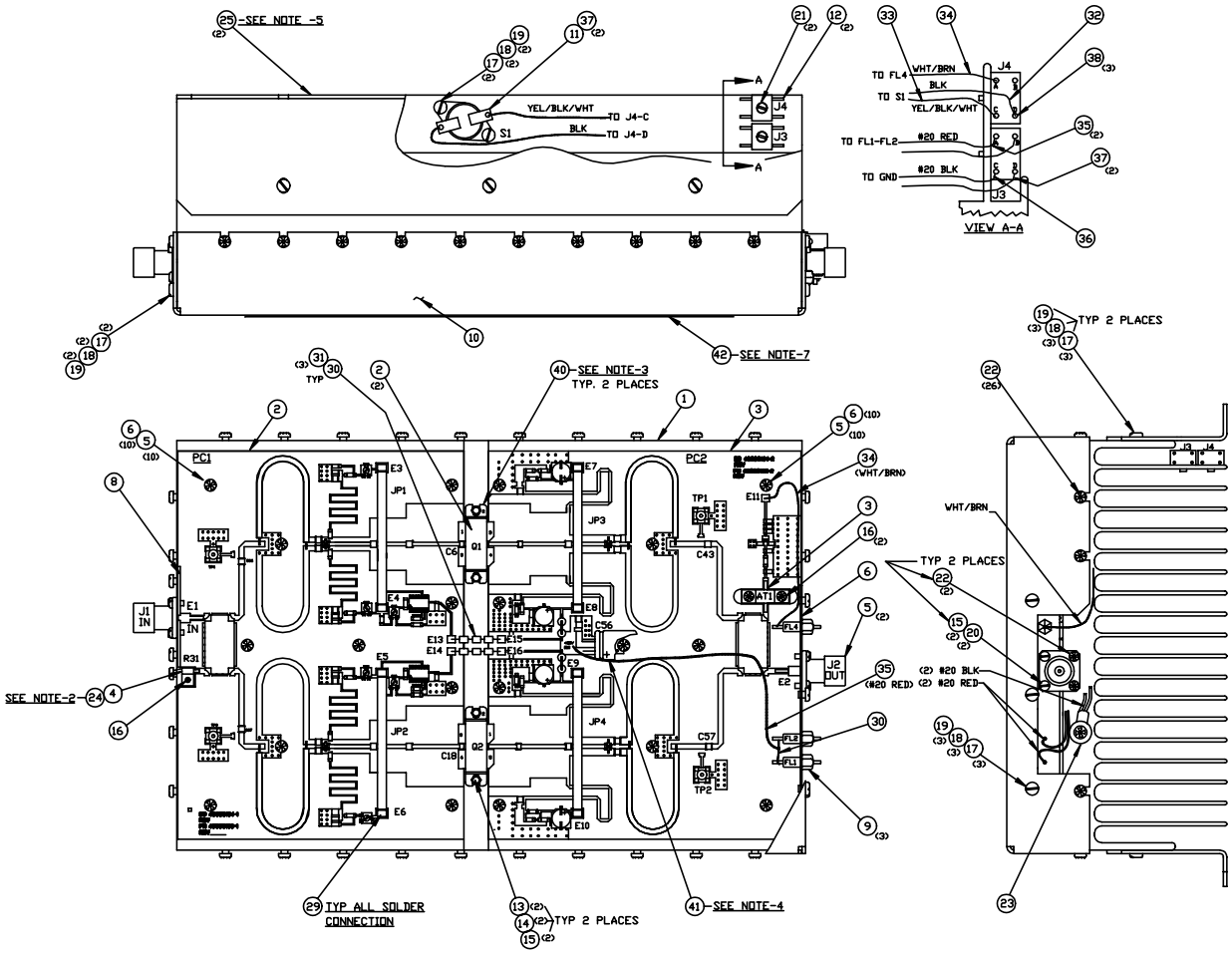

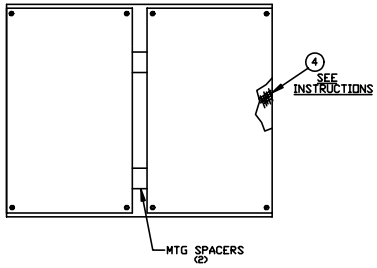

OBSOLETE

REV: 51 -1 PCB TO HEATSINK

INSTRUCTIONS

1- STENCIL ITEM 4, SILVER FILLED CONDUCTIVE EPOXY, USING ITEM 7 (STENCIL) TO ITEM 1.
2- USE MOUNTING SPACER AND MOUNTING HARDWARE FOR PCB ALIGNMENT ON HEATSINK.
3- APPLY CLAMPS AND PRESS FOR APPROXIMATELY 12 HOURS FOR CURING.

REV: 55 -2 MOD. ASSY. 100W FA MODULE

NOTES: UNLESS OTHERWISE SPECIFIED.

1- TRIM PC1 AND PC2 TO ADJUST FOR ANY OVERHANG OF PC BOARDS TO EDGE OF HEATSINK.
2- APPLY A THIN EVEN COAT OF ITEM 24 (THERMAL JOINT COMPOUND) TO AT1 AND R31.
3- TRIM INDIUM FOIL AS REQUIRED.
4- SECURE C56 USING ITEM 41(RTV).
5- MOUNTING BRACKETS ARE INSTALLED AFTER THE WIRING OF S1 TO CONNECTOR.
6- WHEN TESTING, REMOVE C43 AND C57 AND PLACE THEM ACROSS GAP LEADING TO TEST POINT. (TP1 & TP2).
7- CENTER LABEL ON COVER WITH "J" NUMBER MATCHING "J" NUMBER DESIGNATION DRAWING.

ECN	DATE	BY		CHK	CHK	APPV'L
EM 236	11/30/99	A.C.	CHANGED PER ENG. MEMO			
EM 234	10/15/99	A.C.	CHANGED PER ENG. MEMO			
-2/ 53	8/31/99	A.C.	ADDED VIEW A-A AND ITEMS 22, 24, 30, 32-38, AND 40. ADDED R31, C43, C57, FL1-FL4.			
52	5/29/99	A.C.	ADDED NOTE-6 AND ITEMS 27, 28, & 29	C.T.T.		

NEXT ASSY:	DRAFT	4/15/99	L.H.
	DR. CHK	5-3-99	C.T.T.
VERSION	M. ENGR		
MODEL TUA100FA	E. ENGR		
SCALE 1/1	RELEASE		

TOLERANCES - EXCEPT AS NOTED
DECIMAL .X ±.010 .XX ±.005 .XXX ±.002
FRACTIONAL ± 1/64"
ANGULAR ± 1/2 DEG

EMCEE BROADCAST PRODUCTS INC. WHITE HAVEN, PA 18661

ASSEMBLY, MODULE, 100W AMPLIFIER

40383176 REV SEE DASH No.

SHEET 1 OF 1