Internal Photos

OPEN VIEW OF EUT-1

OPEN VIEW OF EUT-2

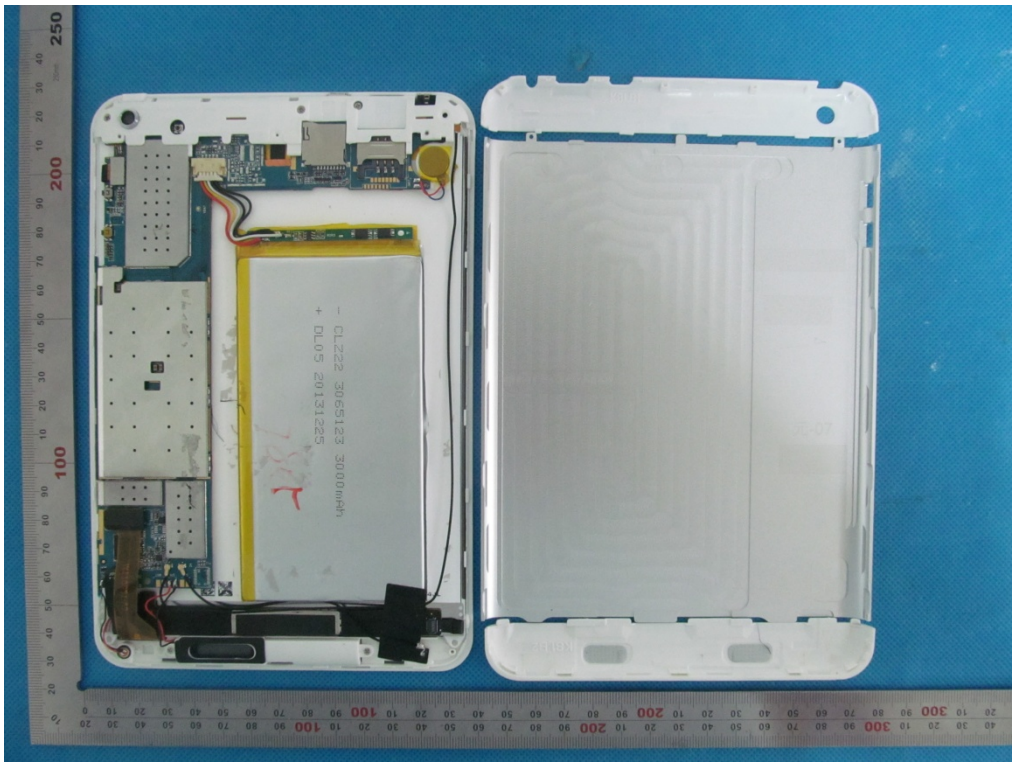

OPEN VIEW OF EUT-3

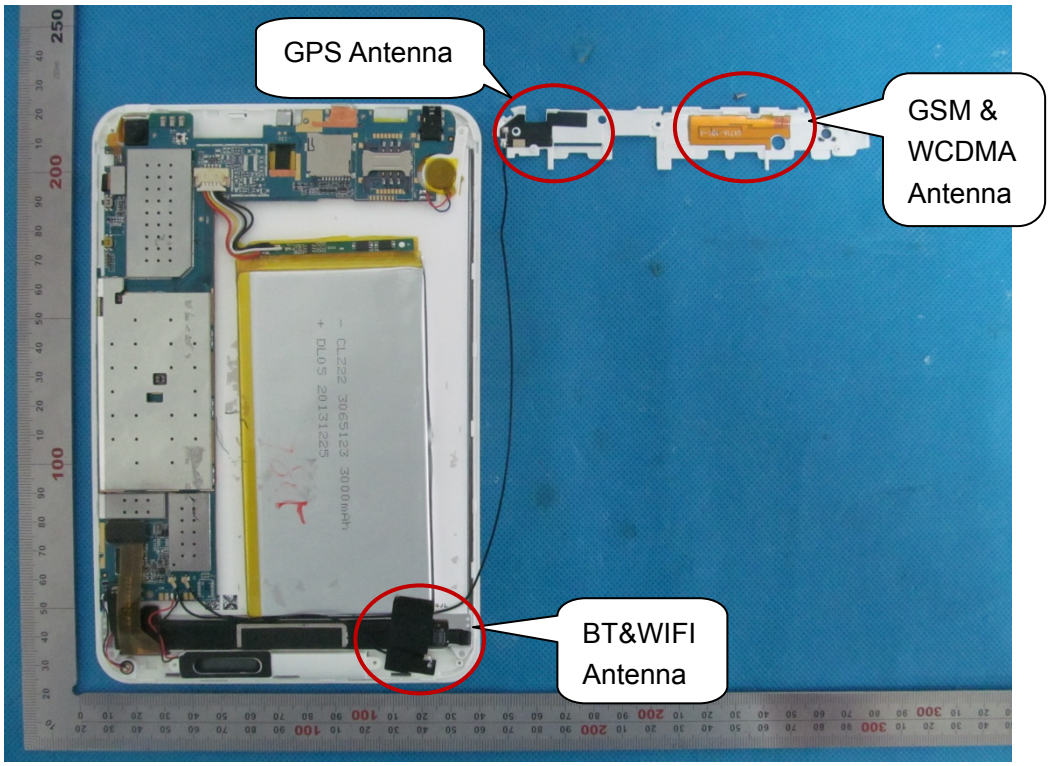

OPEN VIEW OF EUT-4

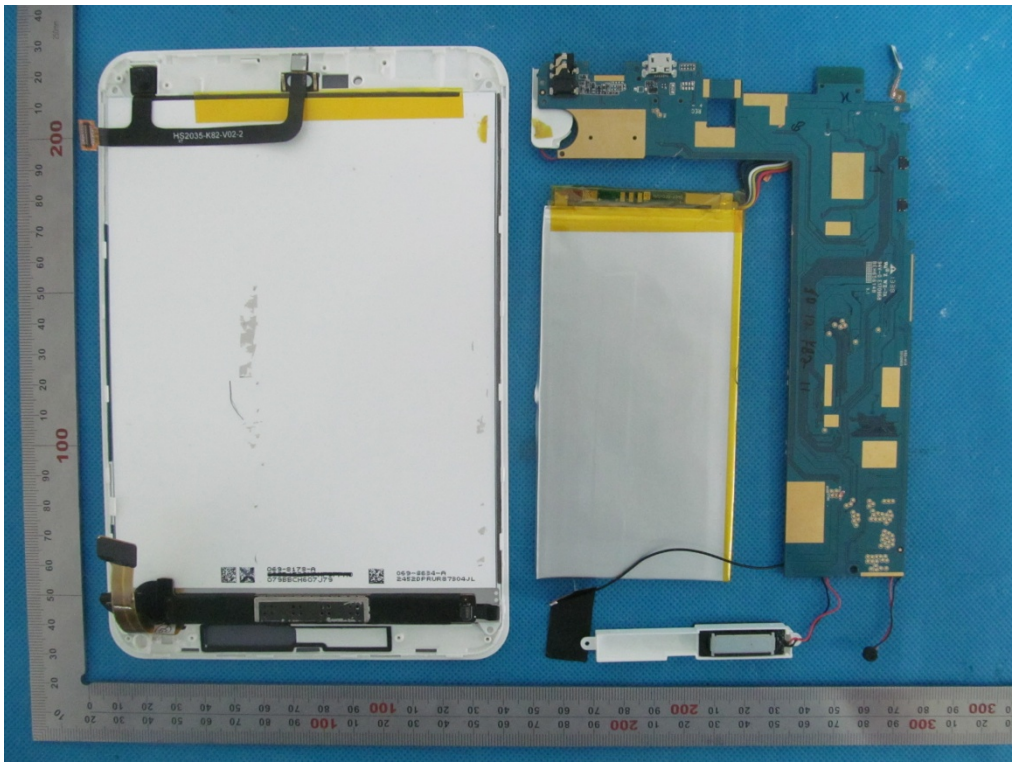

INTERNAL VIEW OF EUT-1

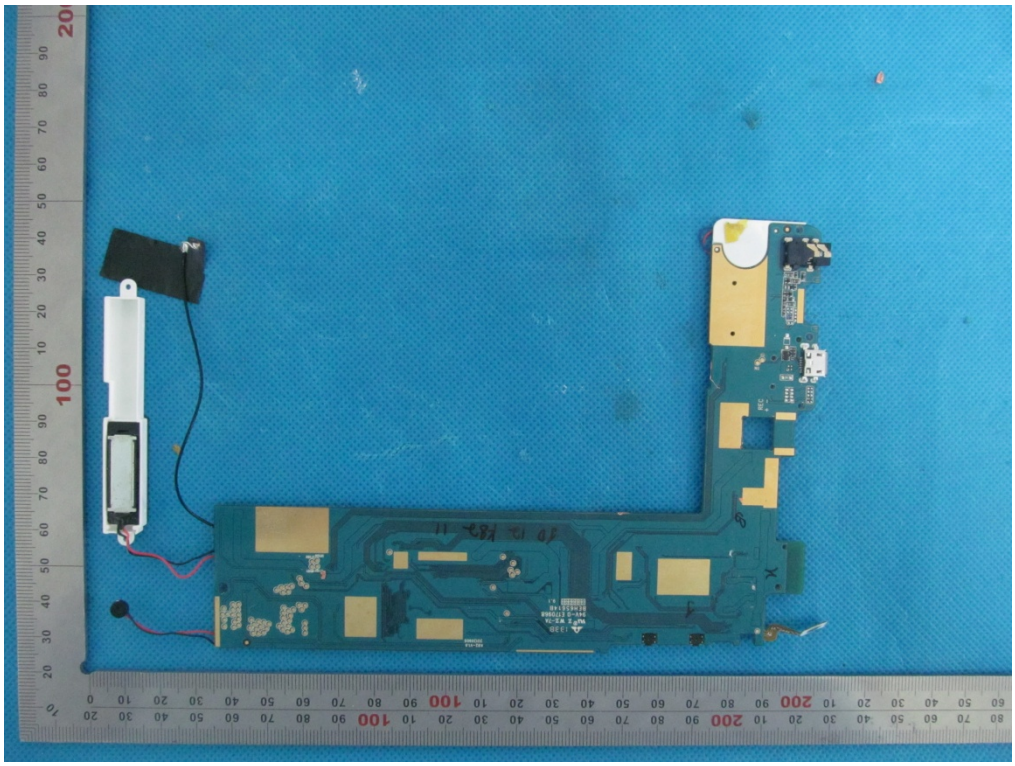
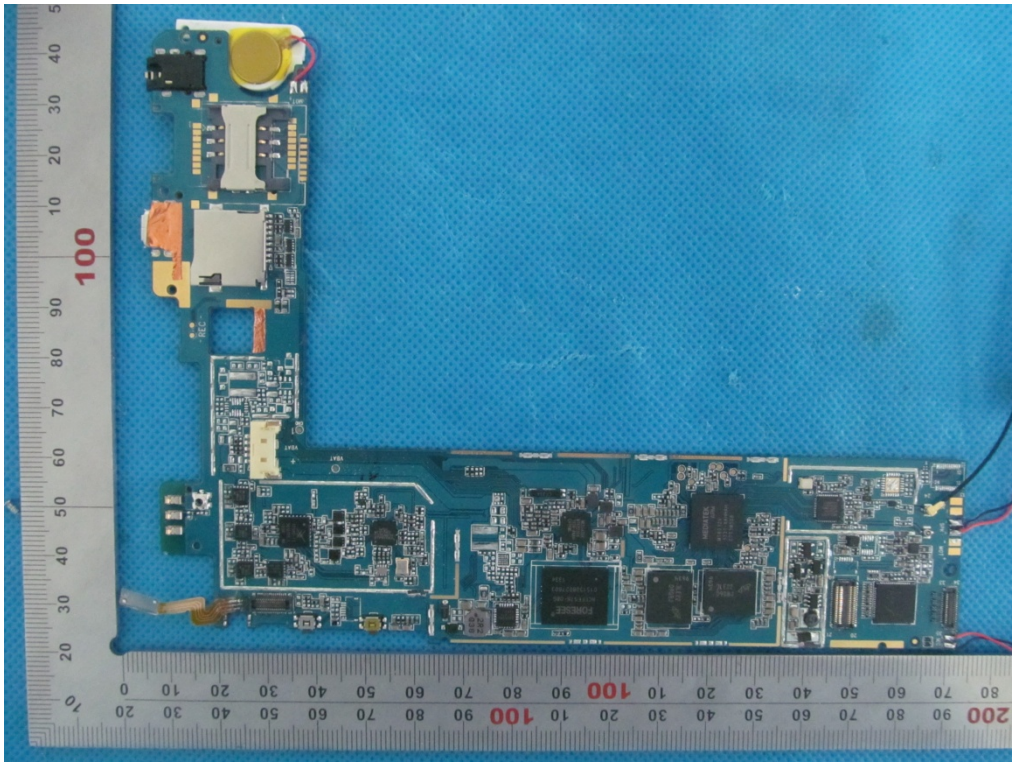
INTERNAL VIEW OF EUT-2