SPEKTRUM®
Innovative Spread Spectrum Technology

iXSR

6-Channel 2.4GHz DSMR® System

Instruction Manual
Bedienungsanleitung

Manuel d'utilisation
Manuale di istruzioni

DSMR®

AVC®

NOTICE

All instructions, warranties and other collateral documents are subject to change at the sole discretion of Horizon Hobby, LLC. For up-to-date product literature, visit horizonhobby.com and click on the support tab for this product.

MEANING OF SPECIAL LANGUAGE

The following terms are used throughout the product literature to indicate various levels of potential harm when operating this product:

NOTICE: Procedures, which if not properly followed, create a possibility of physical property damage AND a little or no possibility of injury.

CAUTION: Procedures, which if not properly followed, create the probability of physical property damage AND a possibility of serious injury.

WARNING: Procedures, which if not properly followed, create the probability of property damage, collateral damage, and serious injury OR create a high probability of superficial injury.

WARNING: Read the ENTIRE instruction manual to become familiar with the features of the product before operating. Failure to operate the product correctly can result in damage to the product, personal property and cause serious injury.

This is a sophisticated hobby product. It must be operated with caution and common sense and requires some basic mechanical ability. Failure to operate this Product in a safe and responsible manner could result in injury or damage to the product or other property. This product is not intended for use by children without direct adult supervision. Do not attempt disassembly, use with incompatible components or augment product in any way without the approval of Horizon Hobby, LLC. This manual contains instructions for safety, operation and maintenance. It is essential to read and follow all the instructions and warnings in the manual, prior to assembly, setup or use, in order to operate correctly and avoid damage or serious injury.

Age Recommendation: Not for children under 14. This is not a toy.

NOTICE: This product is only intended for use with unmanned, hobby-grade, remote-controlled vehicles and aircraft. Horizon Hobby disclaims all liability outside of the intended purpose and will not provide warranty service related thereto.

WARRANTY REGISTRATION

Visit www.spektrumrc.com/registration today to register your product.

SAFETY PRECAUTIONS

- Always ensure all batteries have been properly charged prior to using the model.
- Always check all servos and their connections prior to each run.
- Never operate your model near spectators, parking areas or any other area that could result in injury to people or damage of property.
- Never operate your model during adverse weather conditions. Poor visibility can cause disorientation and loss of control of your model.
- Never point the transmitter antenna directly toward the model. The radiation pattern from the tip of the antenna is inherently low.
- If at any time during the operation of your model you observe any erratic or abnormal operation, immediately stop operation of your model until the cause of the problem has been ascertained and corrected.

CHARGING WARNINGS

CAUTION: All instructions and warnings must be followed exactly. Mishandling of Li-Po batteries can result in a fire, personal injury and/or property damage.

- **NEVER LEAVE CHARGING BATTERIES UNATTENDED.**
- **NEVER CHARGE BATTERIES OVERNIGHT.**
- By handling, charging or using the included Li-Po battery, you assume all risks associated with lithium batteries.
- If at any time the battery begins to balloon or swell, discontinue use immediately. If charging or discharging, discontinue and disconnect. Continuing to use, charge or discharge a battery that is ballooning or swelling can result in fire.
- Always store the battery at room temperature in a dry area for best results.
- Always transport or temporarily store the battery in a temperature range of 40–120º F (5–49° C). Do not store the battery or model in a car or direct sunlight. If stored in a hot car, the battery can be damaged or even catch fire.
- Always charge batteries away from flammable materials.
- Always inspect the battery before charging.
- Always disconnect the battery after charging, and let the charger cool between charges.
- Always constantly monitor the temperature of the battery pack while charging.
- ONLY USE A CHARGER SPECIFICALLY DESIGNED TO CHARGE LI-PO BATTERIES. Failure to charge the battery with a compatible charger may cause a fire resulting in personal injury and/or property damage.
- Never discharge Li-Po cells to below 3V under load.
- Never cover warning labels with hook and loop strips.
- Never charge batteries outside recommended levels.
- Never charge damaged batteries.
- Never attempt to dismantle or alter the charger.
- Never allow minors to charge battery packs.
- Never charge batteries in extremely hot or cold places (recommended between 40–120° F (5–49° C)) or place in direct sunlight.

TABLE OF CONTENTS

Box Contents 5
Charging 6
Memory Card/ Micro USB port 6
Transmitter Functions 7
ANDROID operating system 8
Home Screen 8
Notification Screen 9
RF Transmissioin 10
Raceware operation 12
Model Setup 12
User Name 12
Model Name 12
Receiver type 12
AVC 12
Power System 12
Reverse 12
Throttle & Brake 13
Motors 13
Steering 13
Auxiliary channels 13
RX output map 13
Binding 13
iXSR main screens 15
Dashboard 15
Telemetry 15
Monitor 15
SetUp 15
Models 16
Model Properties 17
Model Name 17
Theme color 17
Model Image 17
Export Model 17
Duplicate/delete Model 17
Reset Model 17
Setup screen 18
Steering 18
Steering Curve 18
Steering 19
On-the-Fly Button 19
Custom 19
Steering Trim 19
Steering speed 19
Steering 20
Steering Rate 20
Channel properties 20
AWS Mode 20
Steering Travel 20
Steering Subtrim 20
Reverse 20
Throttle & Brake/Reverse 21
Throttle Curve 21
Brake Curve 22
Throttle Trim 22
Throttle Rate 22
Reverse Rate 23
Brake Rate 23
Traction control 23
ABS (Automatic Braking System) 23
Idle Up 23
AWD Mode- (MOA) 24
Servo Speed 24
Channel properties 24
Travel 24
Throttle Subtrim 24
Reverse 24
Auxiliary (aux) channel setup 25
Input Control 25
AUX Curve 25
Servo Speed 26
Channel properties 26
Travel 26
Throttle Subtrim 26
Reverse 26
Alerts 27
AVC (Active Vehicle Control) 27
Enable/Disable 27
Steering Gain 27
Throttle Gain 27
Priority 28
Binding 28
Drive Modes 29
Mapping 29
Telemetry 30
Timers 30
Up Timer 31
Down Timer 31
Rolling Lap Timer 31
System Settings 32
User Name 32
Units 32
Scroll Wheel 32
Version & Serial Number 32
Create Backup 32
Restore from Backup 32
Recalibrate iXSR 32
PHYSICAL TRANSMITTER ADJUSTMENTS 33
Included SR2000/SR6000T Receivers 38
Warranty 39
FCC / IC Information 41
Compliance Information 42

BOX CONTENTS

The iXSR radio system is supplied with the following:

- Spektrum iXSR Transmitter
- 10,500mAh Li-Ion Transmitter Battery Pack (Installed)
- Quick Start Guide
- USB magnetic adapter cable with magnetic USB-C adapter
- iXSR Decal Sheet
- iXSR Foam Carrying Case

MICRO MEMORY CARD / MICRO USB PORT

The iXSR features a micro memory card reader (card not included) and a Micro USB port, enabling you to update the transmitter when firmware and Raceware updates are available.
Register your transmitter at *www.SpektrumRC.com* to receive update notifications.

Support Videos:
For helpful videos on programing the Spektrum™ iXSR and other Spektrum Transmitters go to *https://www.spektrumrc.com/*

CHARGING

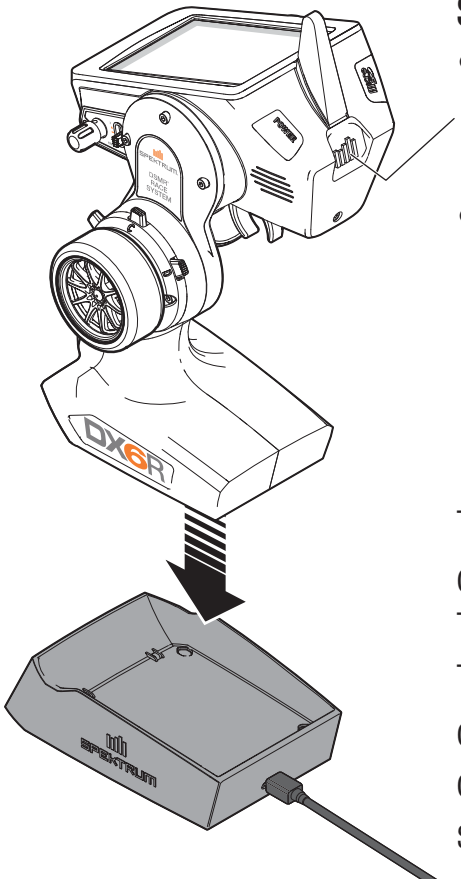

Spektrum LED

- The LED will blink blue to indicate the battery is charging. The LED will turn off when the unit goes to sleep.
- An orange LED indicates the transmitter is powered on and there is radio transmission.

The iXSR has a charging base designed to charge the transmitters 4000mAh Li-Ion Transmitter Pack at a charge rate of 400mAh. The first time you charge the transmitter, the charge time may be 15-20 hours. Always charge the transmitter on a heat-resistant surface.

Charging:

1. Either power off your transmitter or make sure the transmitter is not transmitting (NO orange LED).
2. Connect the AC power cable to the charging base and connect the power supply to a power outlet using the appropriate adapter.
3. Carefully set the transmitter down onto the charging base.
4. The LED will blink blue to indicate the battery is charging. The LED will turn off when the unit goes to sleep.
5. Disconnect the transmitter from the charging base once charging is complete and disconnect the power supply from the power outlet.

CAUTION: Never leave a charging battery unattended.

CAUTION: Never change the low voltage limit for Li-Ion batteries below 3.3V. Doing so could over-discharge the battery and damage both battery and transmitter.

Tip

The iXSR can be charged through the Micro USB port as well.

TRANSMITTER FUNCTIONS

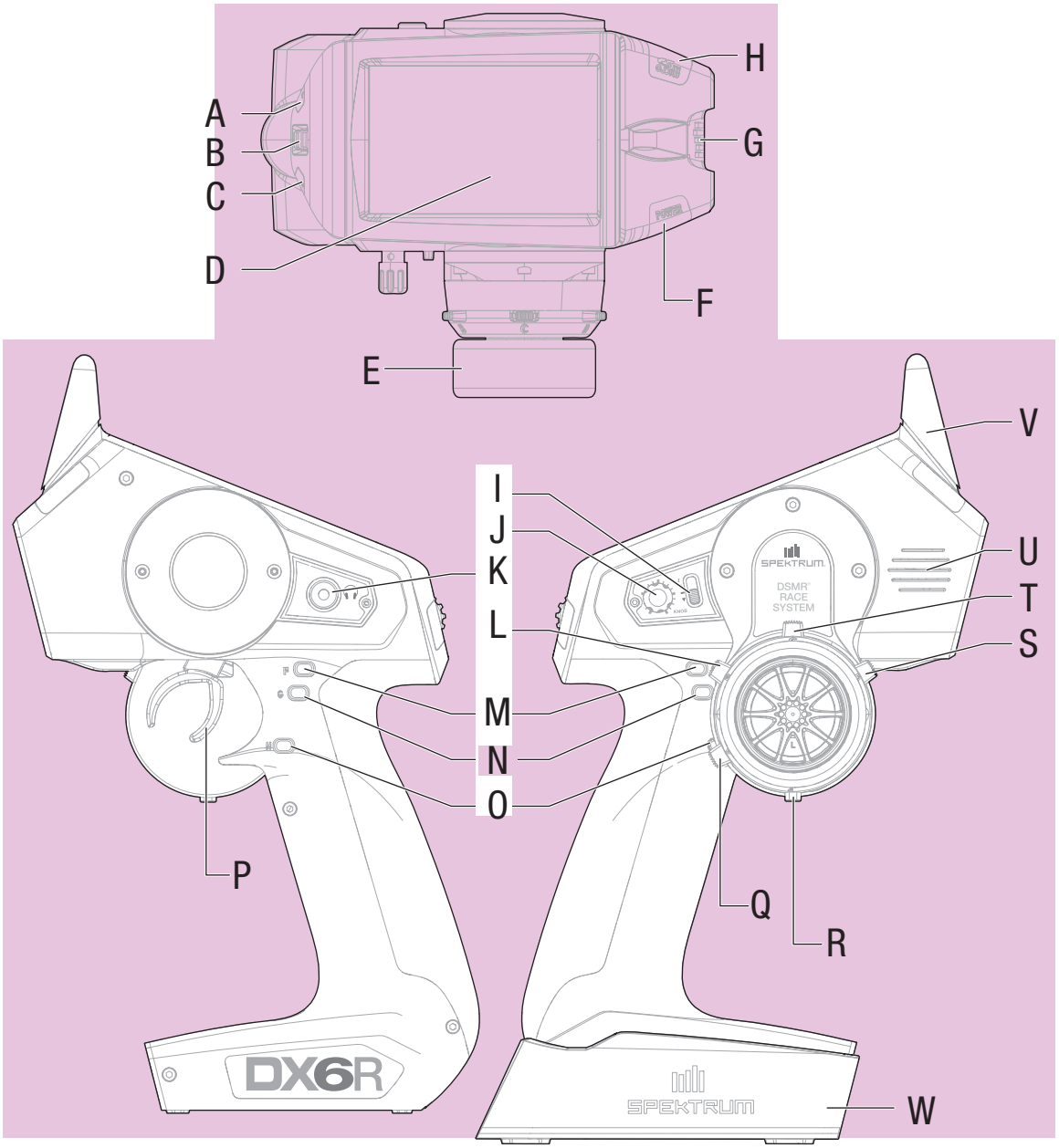

	Function
A	Button L
B	Roller Wheel
C	Button R
D	Color Touch Screen
E	Steering Wheel
F	Power Button
G	Power LED
H	Memory Card/USB Port
I	Switch I
J	Knob
K	Head Phone Jack
L	Button B

	Function
M	Button F
N	Button G
O	Button H
P	Trigger (throttle/brake)
Q	Button A
R	Button E
S	Button D
T	Button C
U	Speaker
V	Antenna
W	Charge Base

ANDROID OPERATING SYSTEM

The iXSR is built on top of the Android operating system and features a large color touch screen display.
To navigate around the iXSR use your finger to tap, swipe and drag icons and menus found on the display.

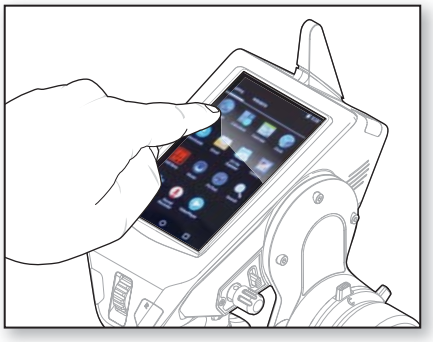

Home Screen

1. APP DRAWER: Contains applications loaded onto the iXSR.
2. BACK: Return to previous screen.
3. HOME: Return to the home screen
4. OVERVIEW: Allows switching between any of the running applications.

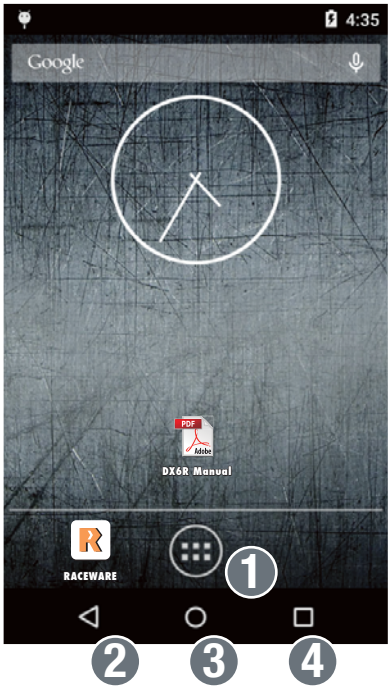

TIP

The iXSR application will hide the home screen navigation icons. Access the Navigation icons at anytime by swiping up from the bottom of the screen.

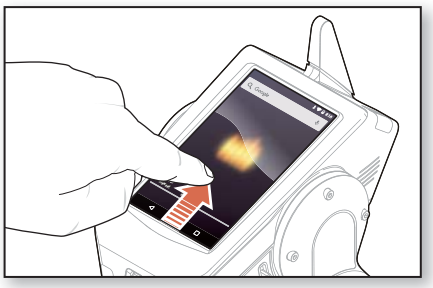

Notification Screen

Swipe down from the top of the screen in any application for quick access to the Notification Screen. From the Notification screen you can quickly edit these settings:

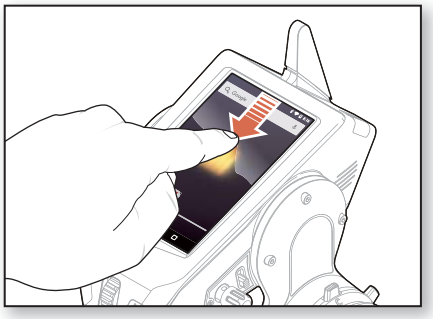

1. Settings
2. User info
3. Screen brightness
4. Wi-fi
5. Bluetooth
6. Notifications

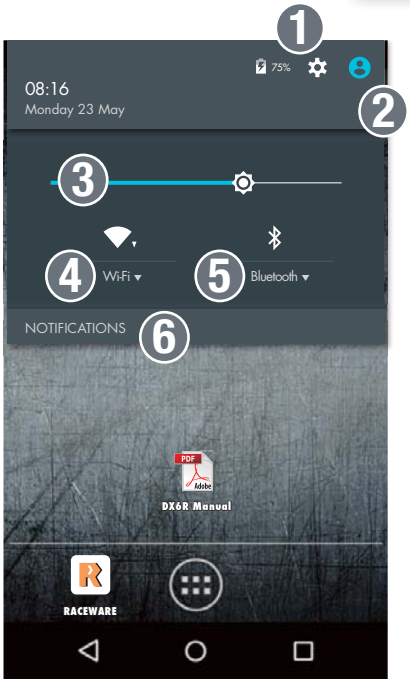

Tip

For more information on using the Android OS, tap on the Quick Start Guide icon below.

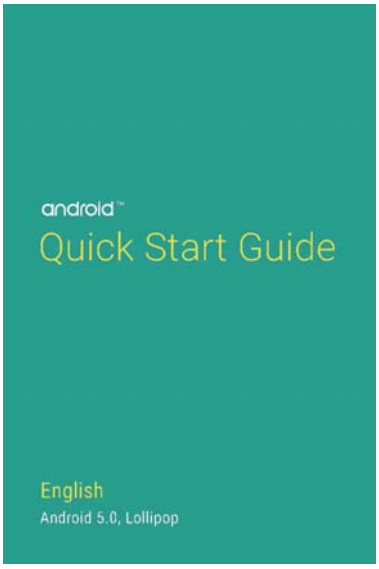

RF Transmissioin:

Closing the RaceWare application or opening a different application and not re-opening the RaceWare application will turn off RF transmission at the pre-determined time limit (default is 5 minutes).

Always keep the RaceWare application open and visible on the screen while driving to avoid losing RF transmission.

To avoid this issue while using Applications other than Raceware on the iXSR, the Sleep Mode time can be manually set from 15 seconds to NEVER in the System Settings. Go to **Settings>Display>Sleep** to make the changes. Alternately if WiFi is turned on in System Settings, even if it is not connected to a network, the RF transmission will not turn off.

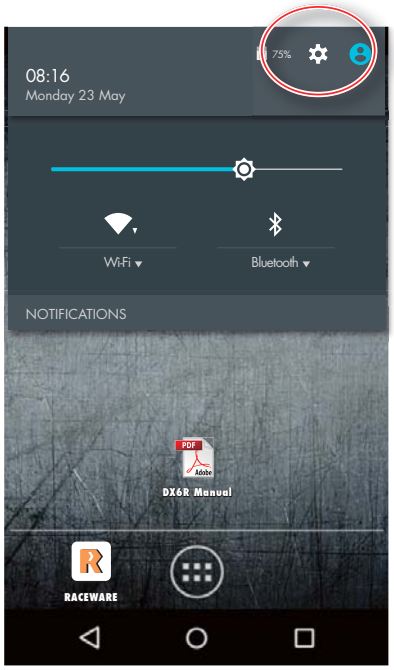

IMPORTANT: If Sleep time is changed to NEVER, make sure to turn the radio off at the end of a race day to avoid running down the battery.

RACEWARE OPERATION

1. Turn on the iXSR by pushing and holding the power button for several seconds. The iXSR will begin to boot up.
2. Once the iXSR boots up, locate the RaceWare™ Application on the home screen. Tap on the icon to launch RaceWare .
3. The first time the RaceWare Application is opened, Model Setup will run.
4. Once the Model Setup opens enter the name for the radio and follow the steps to create your first model. See the Model Setup section for more information.

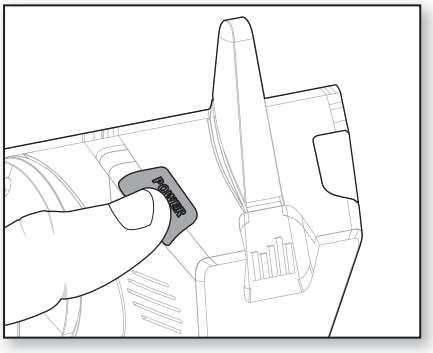

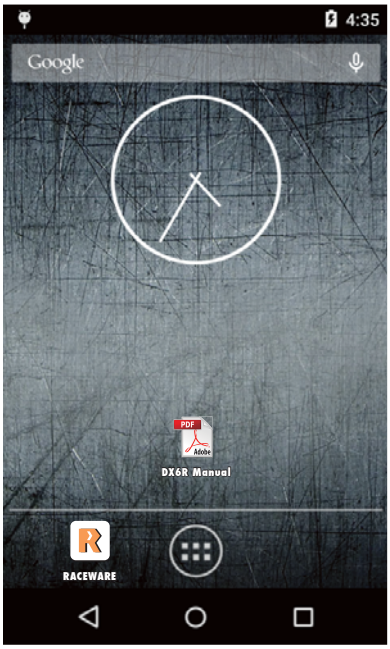

To navigate around the iXSR use your finger to tap, swipe and drag icons and menus found on the display.

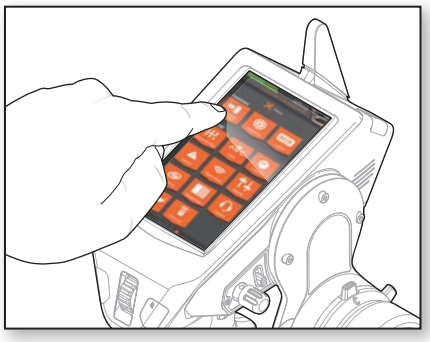

Tip

Instantly jump from one of 4 assigned screens by pressing on the scroll wheel.
See the APP SETTINGS section for setup.

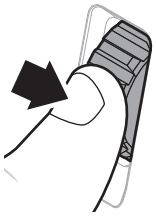

MODEL SETUP

The Model Setup will open at first start up to aid in creating a new model. Alternately, Model Setup can be accessed at any time by going to the setup page in the RaceWare app.
To use Model Setup, simply select the options you wish to use on your model. Depending on options selected, the available options will change. Once a selection is made press NEXT to move to the following page or PREVIOUS to go back a page.

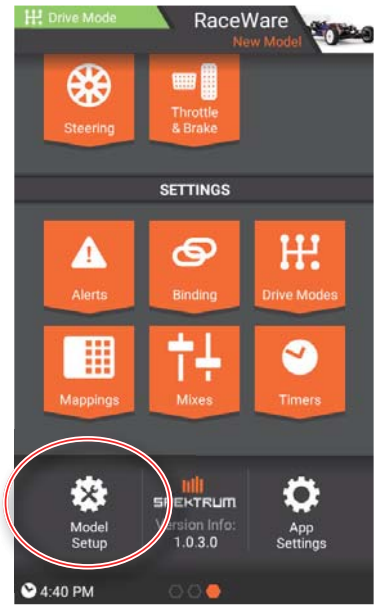

- **USER NAME**
  Tap in the name field to access the keypad. Enter a user name using up to 20 characters. After initial setup, the name can be changed in the App Settings screen.
- **MODEL NAME**
  Tap in the name field to access the keypad. Enter a model name using up to 20 characters.
- **RECEIVER TYPE**
  Select from a list of compatible Spektrum DSMR® Receivers.
- **AVC® TECHNOLOGY**
  Activates or deactivates AVC technology in this model. This menu is only available if an AVC receiver was selected in RECEIVER TYPE.
- **POWER SYSTEM**
  Select either electric or gas/nitro engines.
- **REVERSE**
  Select either REVERSE CAPABLE or NO REVERSE. This menu is only available if an electric power system is chosen.

- **THROTTLE & BRAKE**
  Select either a single channel or independent channels for the throttle and brake.
- **MOTORS**
  Select either a single motor or front and rear motors (MOA).
- **STEERING**
  Select either a single servo or dual servo setup. Depending on options selected, front and rear steering will be available.
- **AUXILIARY CHANNELS**
  Select the open AUX channel being assigned to the second motor or servo. If there are open AUX channels, select the AUX channel and create a name for the function being used (*e.g.* Winch).
- **RX OUTPUT MAP**
  Once all options are made, the RX Output Map will outline the current receiver connections. Double check that all options have an assigned channel.
- **BINDING**
  When the model is complete the last option is to bind your model to the transmitter.
  See BINDING section for more information.

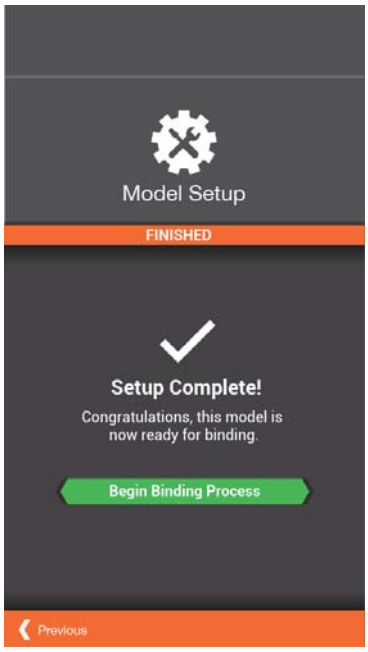

The operations chart on the next page shows the setup options of a 4 channel AVC receiver. Receivers with less channels will have less options.

MODEL SETUP

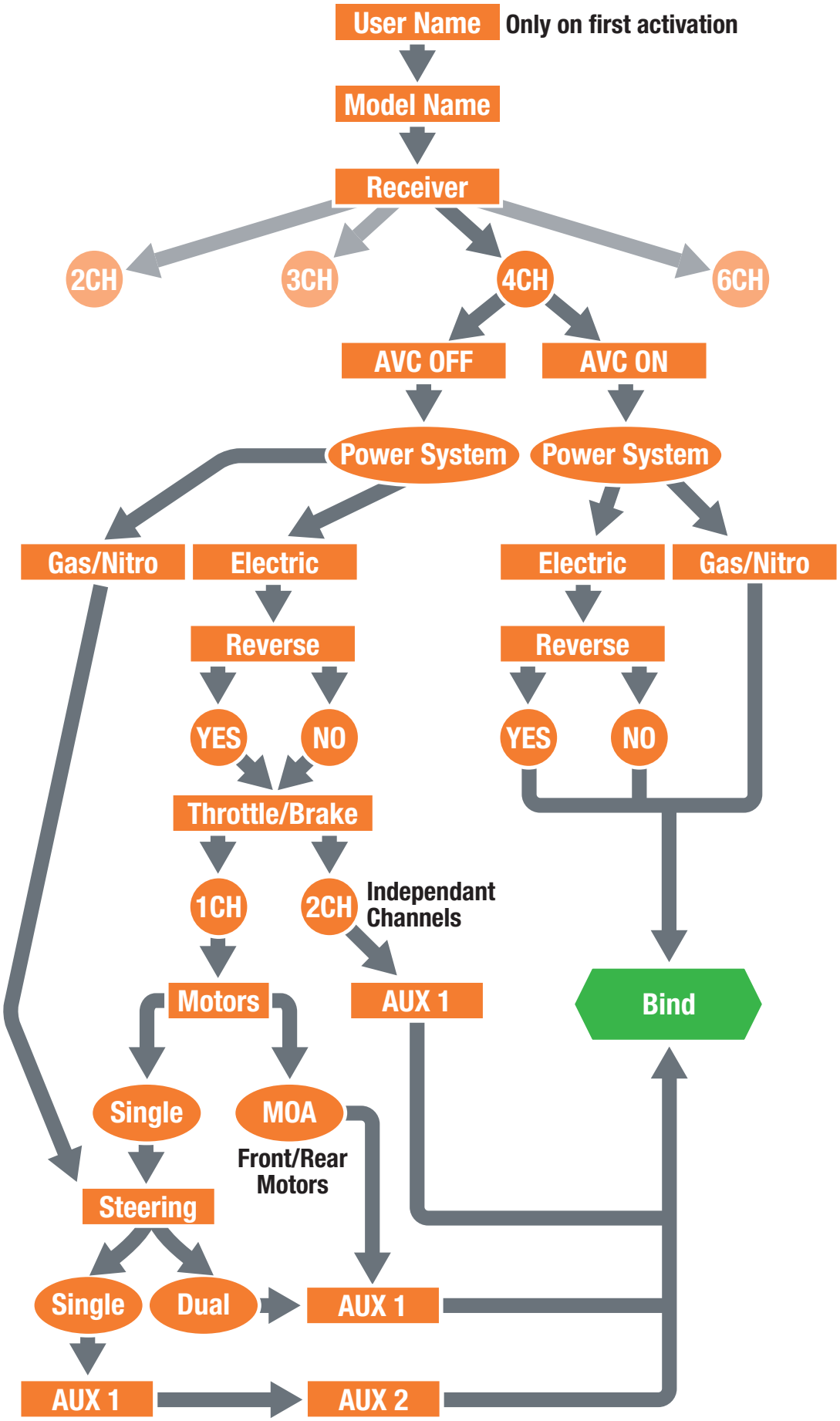
User Name
Only on first activation
Model Name
Receiver
2CH
3CH
4CH
6CH
AVC OFF
AVC ON
Power System
Power System
Gas/Nitro
Electric
Electric
Gas/Nitro
Reverse
Reverse
YES
NO
YES
NO
Throttle/Brake
1CH
2CH
Independant Channels
Motors
AUX 1
Bind
Single
MOA
Front/Rear Motors
Steering
Single
Dual
AUX 1
AUX 1
AUX 2

IXSR MAIN SCREENS

The RaceWare application features 3 - 4 main screens depending on the receiver being used. Simply swipe left or right to move to a different screen.

DASHBOARD

TELEMETRY

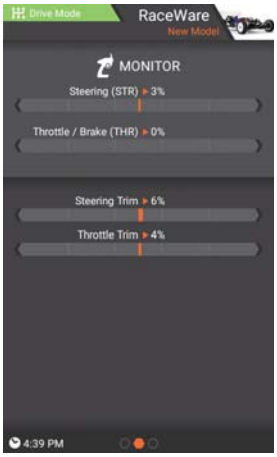

MONITOR

SETUP

- **Dashboard-** The Dashboard is the Home screen for the iXSR. Timers, trims and rates are all visible at a glance. The Dashboard is the first of 4 main screens available to the iXSR user.
- **TELEMETRY-** Telemetry can be found by swiping right from the Dashboard screen. Telemetry displays all telemetry information including signal strength, Temperature, RPM and Rx Voltage.

IMPORTANT: TELEMETRY is only available if you are using a telemetry capable receiver.

- **MONITOR-** Monitor can be found by swiping right from the Dashboard or Telemetry screens if available. The Monitor displays the position of the Steering Wheel, Throttle/Brake, Trims and the position of any AUX channels.
- **SETUP-** Setup can be found by swiping right from the Monitor screen. Setup is where the majority of model setup takes place. The Setup screen also has short cuts for MODEL SETUP and APP SETTINGS.

Tip

- Take note of the circles at the bottom of the screen. The solid circle represents the current screen location.
- Some screens display more information than can fit in the window. Use your finger to drag the screen up or down to view all the content.

MODELS

The Model screen is accessed by tapping the model image in the top right corner of every main screen.

USE THE MODELS SCREEN TO:

- Create New Models
- Import Models
- Activate Models in List
- Sort Model List

CREATE NEW MODEL-

- Tap on Create New Model
- MODEL SETUP will open, Follow the prompts to setup a new model.
- After setup is complete and the new model is saved, it will appear in the Model list.

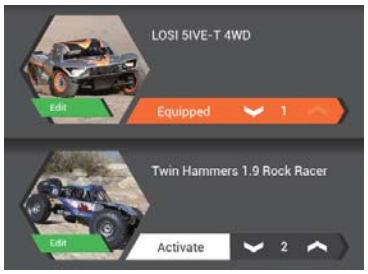

IMPORT MODEL-

- Tap Import from SD to import from memory card
- Tap Receive via Bluetooth to import over Bluetooth.

SORT MODEL LIST-

- Tap on the down arrow to move a model down the list
- Tap on the up arrow to move up on the list

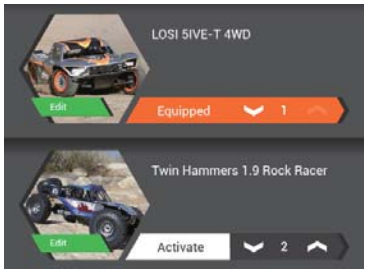

MODEL PROPERTIES

From inside the MODELS screen, Tap on EDIT button within the model image to access MODEL PROPERTIES.

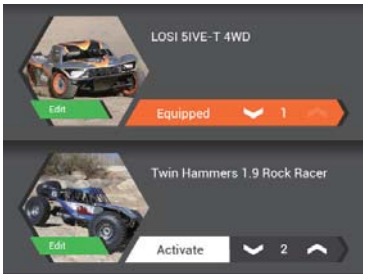

USE THE MODEL PROPERTIES TO:

- Change Model Name
- Change Theme Color
- Change Model Image
- Export Models
- Duplicate Models
- Delete Models

MODEL NAME-

- Tap in the model name box
- Enter up to 20 characters

THEME COLOR-

Tap the COLOR box to select a different theme color

MODEL IMAGE-

- Tap the PHOTO box to change the image
- Use the PHOTO PICKER to select an image from an memory card

EXPORT MODEL-

- Tap EXPORT to SD to export current model to memory card
- Tap TRANSFER VIA BLUETOOTH to export a model directly to another transmitter.

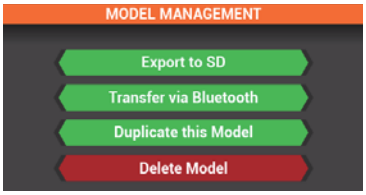

DUPLICATE/DELETE MODEL-

- Tap DUPLICATE THIS MODEL to make a copy of the current model.
- Tap DELETE MODEL to delete current model.

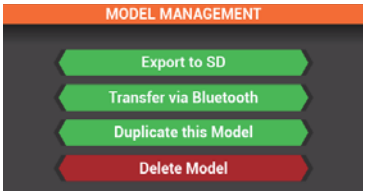

RESET MODEL-

Tap RESET MODEL to return to defaults.

SETUP SCREEN

The Setup Screen allows for quick and easy editing of all model settings.
The Setup Screen is divided into 2 section.

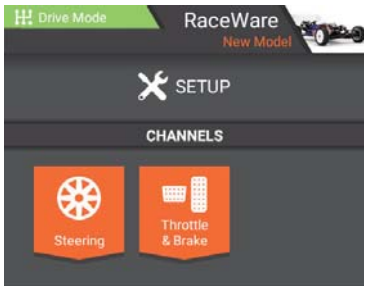

Channels-

- Steering
- Throttle &Brake/ Reverse
- Aux

Settings-

- Alerts
- Mapping
- Telemetry
- Binding
- Timers
- Mixes
- Drive Modes
- AVC

The bottom of the screen also has quick links to MODEL SETUP and APP SETTINGS as well as displaying the version number of the App.

STEERING

The STEERING screen allows for programming of all steering functions.

AVAILABLE FUNCTIONS:

- Steering Curve
- Steering Trim
- Steering Speed
- Steering Rate
- Channel Properties
- AWS Mode
- Travel
- Subtrim
- Reverse

STEERING CURVE

Steering response is adjustable using an EXPO or Custom steering curves.

Standard- Linear steering output (default)

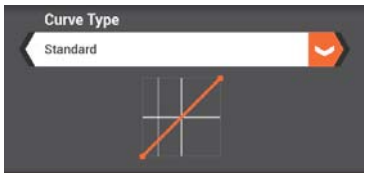

Exponential- Positive (+) EXPO values decrease steering sensitivity around neutral.

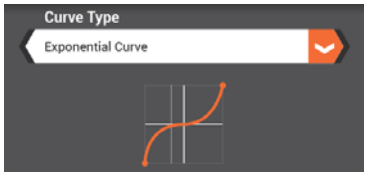

STEERING

On-the-Fly Button-

Select a switch for instant adjustment of the expo curve while driving.

Custom-

Up to 7 selected points can be adjusted to custom tailor steering response throughout the range.

- Tap on the line to add points.
- Tap on a point to adjust its position using the sliders below.
- Delete a point by tapping on it, then select Delete point (red box above graph)

STEERING TRIM-

Steering trim adjusts the steering neutral position. Steering Trim is defaulted to Switch B but can be assigned to any trimmer/switch.

- Common-
- Drive Mode-

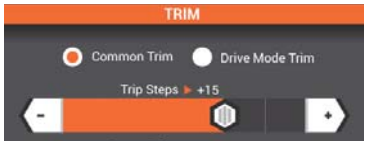

STEERING SPEED-

Reduces servo output transit time (slows down the servo). Used on steering to prevent overly sensitive steering response.

Tip

Look for the ON-THE-FLY BUTTON in most menus. Allows for on the fly adjustments of menu items.

STEERING

STEERING RATE-

Steering rate allows for on-the-fly adjustments of steering travel.
Steering Rate is defaulted to Switch F but can be assigned to any trimmer/switch.

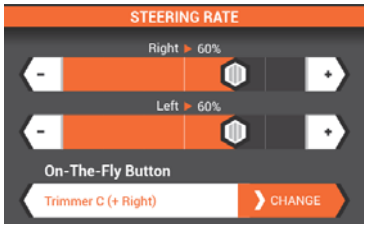

CHANNEL PROPERTIES-

Displays current position of the steering wheel.

AWS MODE-

AWS Mode supports 4 types of all wheel steering

- Front Wheel Steering
- Rear Wheel Steering
- 4 Wheel Steering
- 4 Wheel Crab Steering.

Drive Modes must be select when AWS is active.

STEERING TRAVEL-

Allows independent adjustments of the right and left steering end points.
Adjustment range is 0 to 150%.

STEERING SUBTRIM-

Used to correct minor servo arms/ linkages inaccuracy's.

IMPORTANT: Use minimal Subtrim values. Subtrim offsets the entire stroke including the center and endpoint positions.

REVERSE-

Reverses servo output direction.

THROTTLE & BRAKE/REVERSE

The Throttle & Reverse screen allows for programming of all throttle and brake functions.

AVAILABLE FUNCTIONS:

- Throttle Curve
- Throttle Trim
- Throttle Rate
- Reverse Rate
- Traction Control
- ABS
- Servo Speed
- Channel Properties
- Travel
- Subtrim
- Reverse

THROTTLE CURVE-

Throttle response is adjustable using an EXPO or Custom throttle curves.

Standard- Linear throttle output (default)

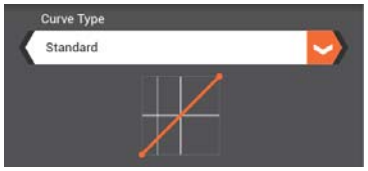

Exponential- Positive (+) EXPO values decrease throttle sensitivity around neutral.

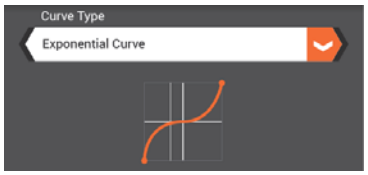

On-the-Fly Button- Select a switch for instant adjustment of the expo curve while driving.

Custom- Up to 7 selected points can be adjusted to custom tailor throttle response throughout the range.

- Tap on the line to add points.
- Tap on a point to adjust its position using the sliders below.
- Delete a point by tapping on it, then select Delete point (red box above graph)

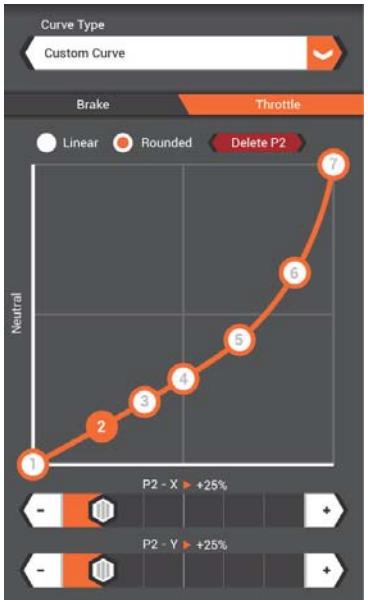

THROTTLE & BRAKE/REVERSE

BRAKE CURVE-

Brake response is adjustable using an EXPO or Custom Brake curves.

Standard- Linear output (default)

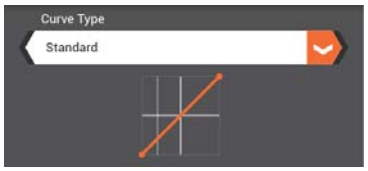

Exponential- Positive (+) EXPO values decrease brake sensitivity around neutral.

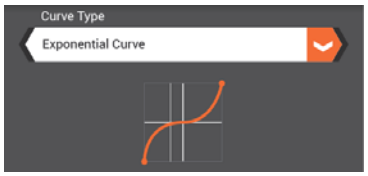

On-the-Fly Button- Select a switch for instant adjustment of the expo curve while driving.

Custom- Up to 7 selected points can be adjusted to custom tailor brake response throughout the range.

- Tap on the line to add points.
- Tap on a point to adjust its position using the sliders below.
- Delete a point by tapping on it, then select Delete point (red box above graph)

THROTTLE TRIM-

Throttle trim adjusts the steering neutral position and is used to adjust static brakes.
Throttle Trim is defaulted to Switch A but can be assigned to any trimmer/switch.

- Common-
- Drive Mode-

THROTTLE RATE-

Throttle rate is a full throttle limiter that limits the full throttle position.
Throttle Rate can be assigned to any trimmer/witch.

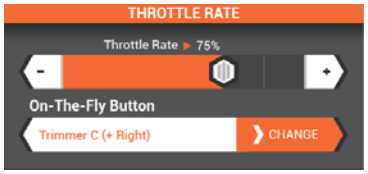

THROTTLE & BRAKE/REVERSE

REVERSE RATE-

Reverse rate adjusts the percentage of throttle available for reverse.
Reverse rate can be assigned to any trimmer/ switch

BRAKE RATE-

Brake rate adjusts the full brake position.
Brake rate can be assigned to any trimmer/switch

TRACTION CONTROL-

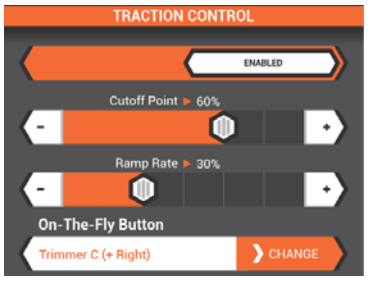

Traction Control adjusts the acceleration (ramp) rate providing improved throttle control especially on slippery tracks.

- **Ramp Rate-** adjusts the rate of acceleration (1= slow, 100= fast)
- **Cutoff Point-** Allows the selection of a throttle position where the ramp rate is disengaged anytime the throttle output is above that point.

Traction control can be assigned to any trimmer/switch.

ABS (AUTOMATIC BRAKING SYSTEM)-

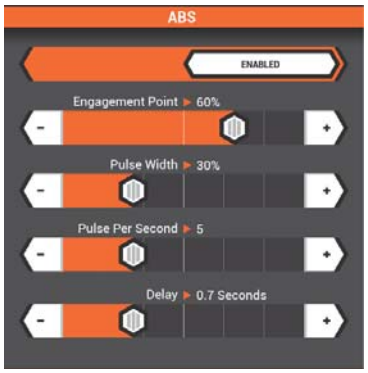

ABS helps prevent brake lock-ups and improves braking performance by pulsing the brakes.

- **Engagement Point:** The throttle position that the pulse braking takes place (0 to 100, default is 60).
- **Pulse Width:** The distance the throttle travels during the pulse braking (0 to 100, default is 50).
- **Pulse Per Second:** The pulsing speed or frequency of the pulse braking (-1 to -30, default is -1).
- **Delay:** The time delay before the pulsing takes place.

IDLE UP-

Used with gas engines, Idle Up advances the throttle's idle position allowing for easier cold engine starting.
Idle Up can be assigned to any trimmer/switch and an alarm can be programmed warning when Idle up is active. See Alerts Section.

THROTTLE & BRAKE/REVERSE

AWD MODE- (MOA)-

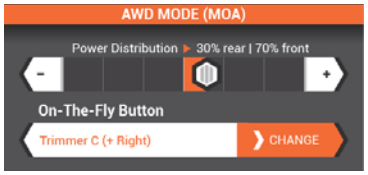

Motor-On-Axle (MOA) programming allows on the fly power distribution from the front to rear wheels. Adjustable ranges from 100% rear 0% front to 0% rear 100% front. When activated the default setting is 50%/50% and this setting can be adjusted and stored using drive modes or assigned to a trimmer/ Switch.

SERVO SPEED-

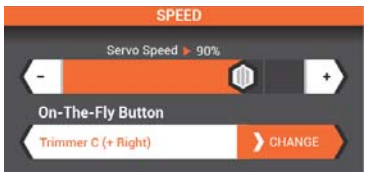

Reduces servo output transit time (slows down the servo).
Servo Speed can be assigned to any trimmer/switch

CHANNEL PROPERTIES-

Displays current position of the steering wheel.

TRAVEL-

Allows independent precise adjustments of the brake end points.

THROTTLE SUBTRIM-

Used to correct minor servo arms/ linkages inaccuracy's.

IMPORTANT: Use minimal Subtrim values. Subtrim offsets the entire stroke including the center and endpoint positions.

REVERSE-

Reverses servo output direction.

AUXILIARY (AUX) CHANNEL SETUP

The AUX setup screen allows for programming of all auxiliary channel functions.

AVAILABLE FUNCTIONS:

- Input Control
- AUX Curve
- AUX Speed
- Channel Properties
- Travel
- Subtrim
- Reverse

INPUT CONTROL-

- Select button or switch for control
- Select how many positions
- Select how many steps for each button press

AUX CURVE-

AUX channel response is adjustable using an EXPO or Custom curves.

Standard- Linear output (default)

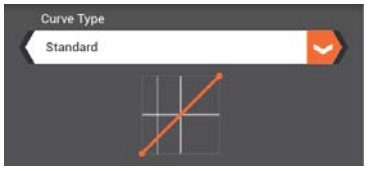

Exponential- Positive (+) EXPO values decrease sensitivity around neutral.

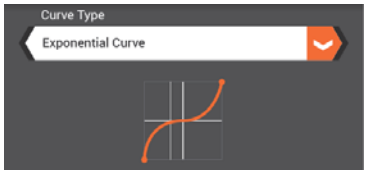

Custom- Up to 7 selected points can be adjusted to custom tailor AUX channel response throughout the range.

- Tap on the line to add points.
- Tap on a point to adjust its position using the sliders below.
- Delete a point by tapping on it, then select Delete point (red box above graph)

AUXILIARY (AUX) CHANNEL SETUP

SERVO SPEED-

Reduces servo output transit time (slows down the servo).
Servo Speed can be assigned to any trimmer/switch

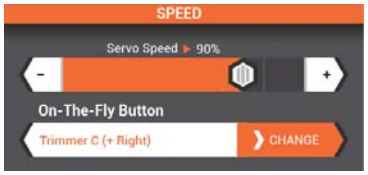

CHANNEL PROPERTIES-

Displays current position of the AUX channel.

TRAVEL-

Allows independent precise adjustments of the end points.

THROTTLE SUBTRIM-

Used to correct minor servo arms/ linkages inaccuracy's.

IMPORTANT: Use minimal Subtrim values. Subtrim offsets the entire stroke including the center and endpoint positions.

REVERSE-

Reverses servo output direction.

ALERTS

The Alerts screen allows for assigning of Tone, Vibrate, Tone + Vibrate or Voice to system and Telemetry Alerts.

AVAILABLE ALERTS:

System	Telemetry
• TX Battery • Timer 1 • Timer 2 • Timer 3 • Inactive Alarm	• RPM • Temperature • RX Battery

AVC (ACTIVE VEHICLE CONTROL)

AVC® technology is available, only when an AVC capable receiver is selected.

Enable/Disable-
Turn AVC on or off.

Steering Gain-
The default value is 50%. As the value increases, the AVC steering stability increases.

- If the front wheels begin to shake, the ST Gain value is too high. Reduce the ST Gain value until the front wheels stop shaking.

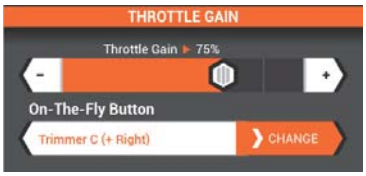

Throttle Gain-
The default value is 50%. As the value increases, the throttle management increases.

AVC (ACTIVE VEHICLE CONTROL)

Priority-

The default value is 0%, meaning AVC technology is active throughout the steering range. As you turn the steering wheel away from center (neutral), the transmitter controls have priority over the AVC system. Increasing the Priority value decreases how active AVC is as the steering wheel is turned left and right. For example, if you increase Priority to 80%, you reduce the AVC steering control by 80% at full left or full right steering. Increasing the Steering Priority enables you to make tighter turns.

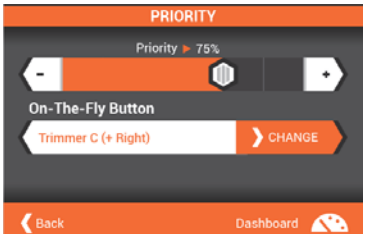

BINDING

Binding is the Process of teaching the receiver the specific transmitter's code called GUID (Globally Unique Identifier) and storing failsafe values. When a receiver is bound to a transmitter/model memory, the receiver will only respond to that specific transmitter/model memory.

1. Tap the Desired Frame Rate drop down to select from 5.5ms, 11ms and 22ms.
   - If 5.5ms frame rate is selected in the transmitter, only two channels, Steering and Throttle, are operational. The Aux channels can be used to power a personal transponder or lights.
   - If a frame rate other than 5.5ms is selected, the Aux channels will operate as extra servo channels.
2. With the receiver in bind mode Tap the Begin Binding button.

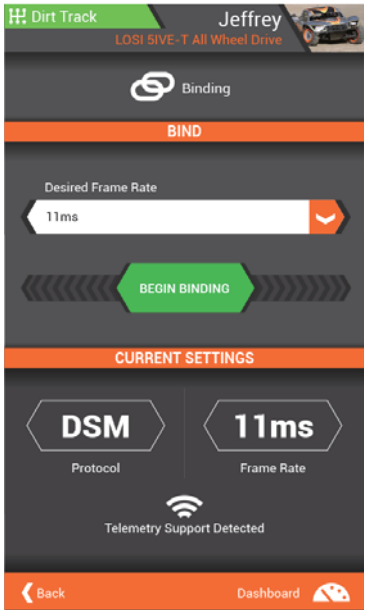

IMPORTANT: Re-bind any time you change the frame rate in the transmitter.

DRIVE MODES

The current drive mode is always displayed in the top left corner of the 4 main screens.
Every model can have several drive modes programmed to a switch or button for on-the-fly adjustments.
Once a drive mode is selected, Changes to model setup, trim and timers will only effect that drive mode.

- Tap the ON-the-Fly Button drop down to select a button or switch to enable instant mode changes.
- Tap on the Drive Mode button to change the drive mode name
- Tap on Flag Color to change the color of the Drive mode banner.
- Tap on Delete to delete drive modes (there must be at least 1 drive mode).
- If more than 1 drive mode, tap on the arrow buttons to order the list.

MAPPING

The Mapping screen displays an overview of all transmitter and receiver functions as they are currently setup for the active model. Use the mapping screen to help correctly connect servo and auxiliary equipment into the correct receiver port.

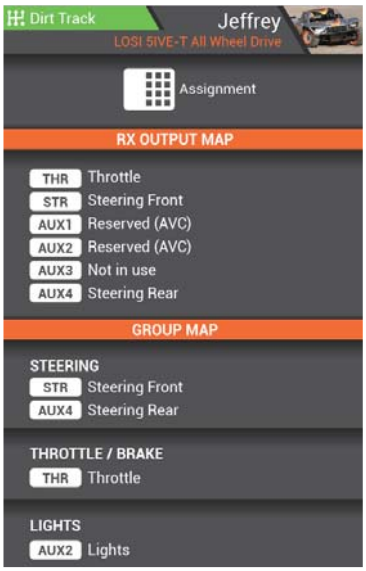

TELEMETRY

The Telemetry SetUp Screen allows for editing values as well as how the information is displayed on the Telemetry Screen.

AVAILABLE FUNCTIONS:

- Temperature
- Receiver Battery
- Speed/RPM
- Sensor Type
- Roll-Out

- Tap DISPLAY to Hide the telemetry information on the Telemetry screen. If information is already hidden, tap Hide to show.
- Change Minimum values displayed (per sensor)
- Change Maximum values displayed (per sensor)
- Change Warning Threshold (per sensor)
- Choose motor sensor type and Pole Count to accurately display motor RPM's
- Select drive ratios and tire diameter to accurately display model speeds.

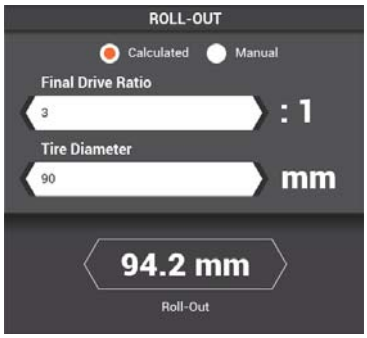

TIMERS

The iXSR offers 5 timers, all viewable from the Dashboard. Pause and Reset the timers directly on the dashboard or configure a Timer switch or button.

AVAILABLE TIMERS:

- Total Time
- Model Time
- Up Timer
- Down Timer
- Rolling Lap Timer

To configure the timers and to clear Model Time and Total Drive Time go to the Timers screen in SetUp.

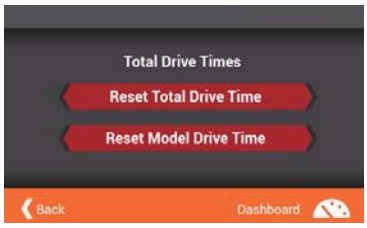

TIMERS

Timers 1-3 can be configured to be either an Up, Down or Lap Timer.

Up Timer-

The Up Timer counts up, functioning as a stopwatch when triggered via a selectable button/switch. It is useful for timing a fuel run to determine fuel mileage/pit stop strategy or, for electrics, to time the run time of a pack to determine gear ratio and setup information.

- Select minutes (0-599) and seconds (0-59) by tapping in the appropriate box.
- Select the button or switch to activate, pause and reset the timer.
- This timer can also be paused or reset on the main DashBoard screen.

Down Timer-

The down Timer counts down, when triggered via a selectable button/switch. When the down timer expires, an Alert will sounds and the timer begins to count up.

- Select minutes (0-599) and seconds (0-59) by tapping in the appropriate box.
- Select the button or switch to activate, pause and reset the timer.
- This timer can also be paused or reset on the main DashBoard screen.

IMPORTANT: Configure the Timers Alert type (Tone, Vibrate, Tone + Vibrate or Voice), by going to the ALERTS screen in SETUP.

Rolling Lap Timer-

Start the Rolling Lap Timer via a selectable programmable switch. When the timer expires, an alarm sounds and the Lap timer resets and begins to count down again.

- Select minutes (0-599) and seconds (0-59) by tapping in the appropriate box.
- Select the button or switch to activate, pause and reset the timer.
- This timer can also be paused or reset on the main DashBoard screen.

SYSTEM SETTINGS

AVAILABLE FUNCTIONS:

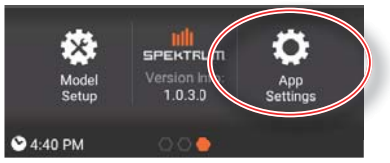

- User Name
- Units
- Scroll Wheel
- Version Number
- Serial Number
- Create Backup
- Restore from Backup
- Recalibrate the iXSR

User Name-

Tap on the name input box to enter User Name up to 20 characters long.

Units-

Select between Imperial/US or Metric.

Scroll Wheel-

Configure the Scroll Wheels button push to jump to one of these four screens.

- DashBoard
- Telemetry
- Monitor
- SetUp

Version & Serial Number-

Create Backup-

Tap on the CREATE BACKUP button to save a backup copy of the iXSR.

Restore from Backup-

Tap on the RESTORE FROM BACKUP button to restore the iXSR from a saved version.

Recalibrate iXSR-

Tap on the RECALIBRATE IXSR button to enter into recalibration mode. Follow the on screen directions and save when finished.

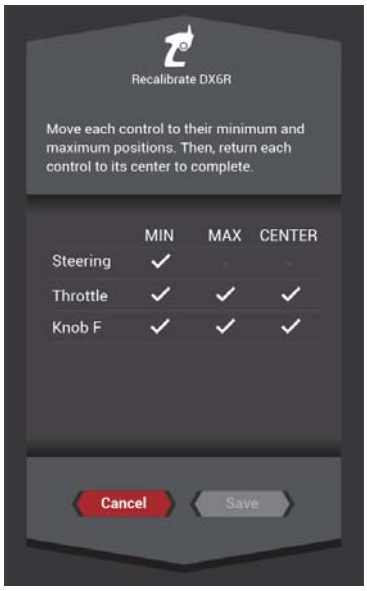

PHYSICAL TRANSMITTER ADJUSTMENTS

The iXSR is designed to be extremely adjustable to suite a wide variety of driver needs. All control inputs can be configured for Left or Right handed driving and can be adjusted for angle and spring tension.

AVAILABLE ADJUSTMENTS:

- Adjustable trigger and steering tension
- Multiple trigger position
- Multiple wheel drop-down options
- 10˚ and 15˚ Steering Adapters
- Small and Large Steering Wheel
- Left- or right-hand steering
- 3 grip sizes

THROTTLE DISTANCE/ ANGLE

- 2.5mm hex wrench
- loosen 1 to 2 turns.
- Adjust IN or OUT.
- Tighten

THROTTLE TENSION

- 1.5mm hex wrench
- Clockwise to decrease tension

STEERING TENSION

- 1.5mm hex wrench
- Clockwise to increase tension

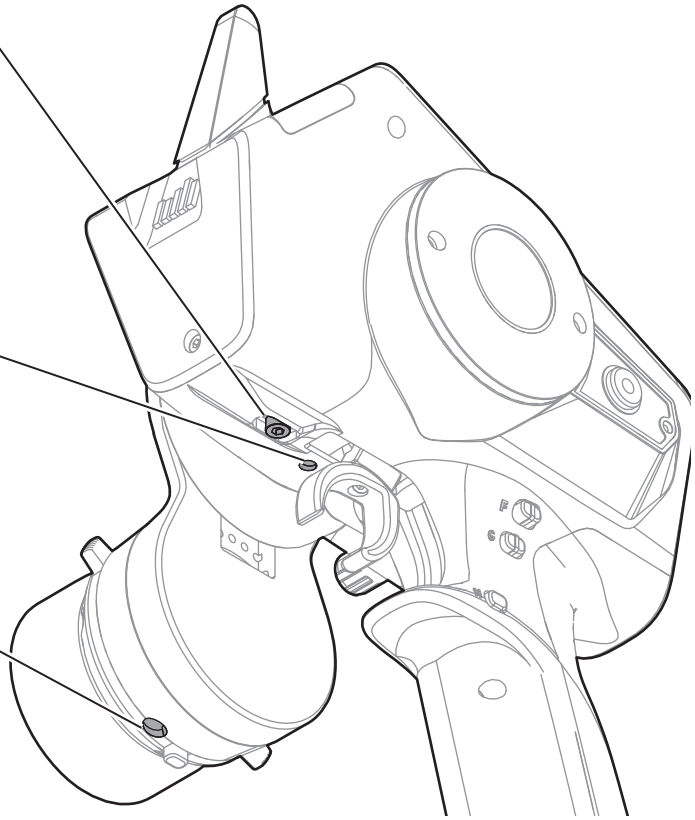

PHYSICAL TRANSMITTER ADJUSTMENTS

DROPDOWN STEERING WHEEL OPTIONS

The iXSR comes with the dropdown wheel installed. The dropdown can be rotated for a perfect feel or removed for a standard wheel layout. All the parts necessary to convert to the standard wheel are included.

ROTATE:

- Turn off the iXSR
- Using a 2mm hex wrench, remove 3 screws.
- Rotate the drop down to the desired angle.
- Align with the screw holes and re-install the 3 screws being careful not to pinch any wires.

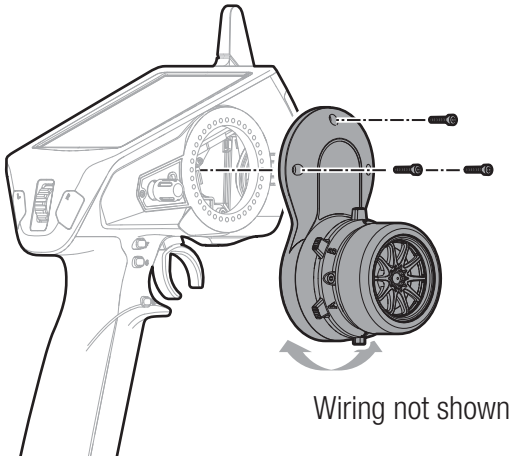

STANDARD WHEEL CONVERSION:

- Using a 2mm hex wrench, remove the 3 screws from the drop down and remove the drop down from the transmitter. Carefully disconnect the 2 wiring harness from inside the transmitter.
- Using a 1.5mm hex wrench, remove the steering wheel.
- Using a 2mm hex wrench, remove 2 screws from the steering mechanism. Remove the steering mechanism from the drop down being careful to pull the wiring harness through the opening.
- Keep the drop down in a safe place for future use.
- Connect the 2 wiring harnesses to the board inside the iXSR. Note that one connector has 6 pins and the other has 7.
- Re-install the steering mechanism directly onto the transmitter using the 2 screws
- Re-install the steering wheel.

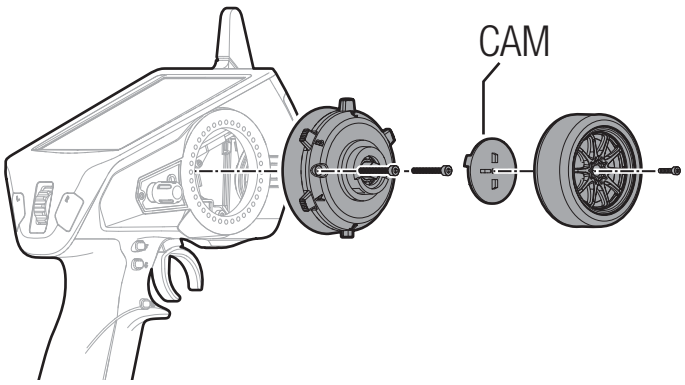

Tip

There are two wheel CAM's included with the iXSR. They attach to the steering mechanism and physically limit the wheel travel. Use the 32º CAM with the large wheel and the 36º CAM with the Small steering wheel.

PHYSICAL TRANSMITTER ADJUSTMENTS

STEERING WHEEL WEDGES

The iXSR comes with a 10º and 15º wedge to angle the steering wheel. The wedges can be used with the dropdown or standard configuration.

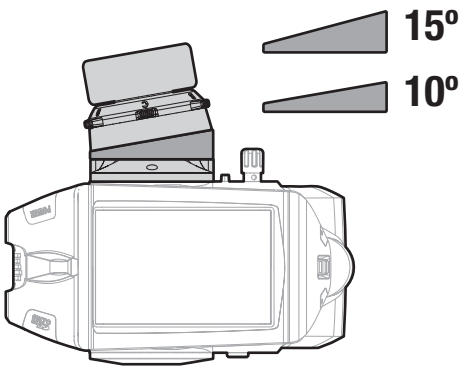

- Refer to the **DROPDOWN STEERING WHEEL OPTIONS** section for directions on removing and installing the steering mechanism.
- Choose the 10º or 15º wedge.
- The wedge goes between the steering mechanism and the drop down (or transmitter if the drop down is not being used) and can be rotated to almost any angle.

CHANGING GRIPS

The iXSR comes with 3 sizes of grips. The medium-size grip is installed at the factory.

- Lift the edge of the grip and pull the grip away from the handle.
- Align the tabs on the new grip with the slots in the handle.
- Press the grip against the handle.

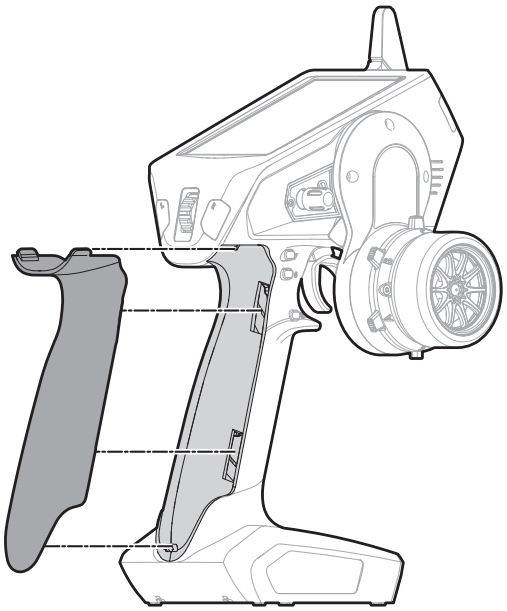

CHANGING FROM RIGHT HANDED TO LEFT HANDED

The iXSR can be configured for either right or left handed drivers.

STEERING MECHANISM:

- Turn off the iXSR
- Using a 2mm hex wrench, remove 3 screws.
- Carefully remove the 2 wire connectors from the board inside the transmitter.
- Set aside

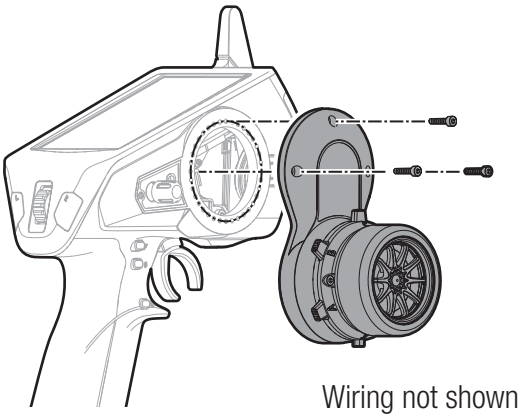

BACK COVER:

- Using a 2mm hex wrench, remove 2 screws.
- Remove the back cover and re-install on the opposite side of the transmitter.

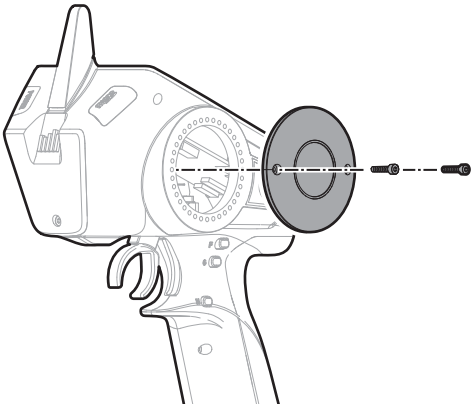

STEERING MECHANISM:

- Connect the 2 wire connectors to the board inside the iXSR. Note that one connector has 6 pins and the other has 7.
- Align with screw holes and re-install the 3 screws being careful not to pinch any wires.

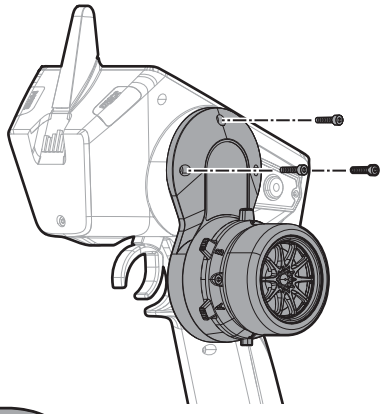

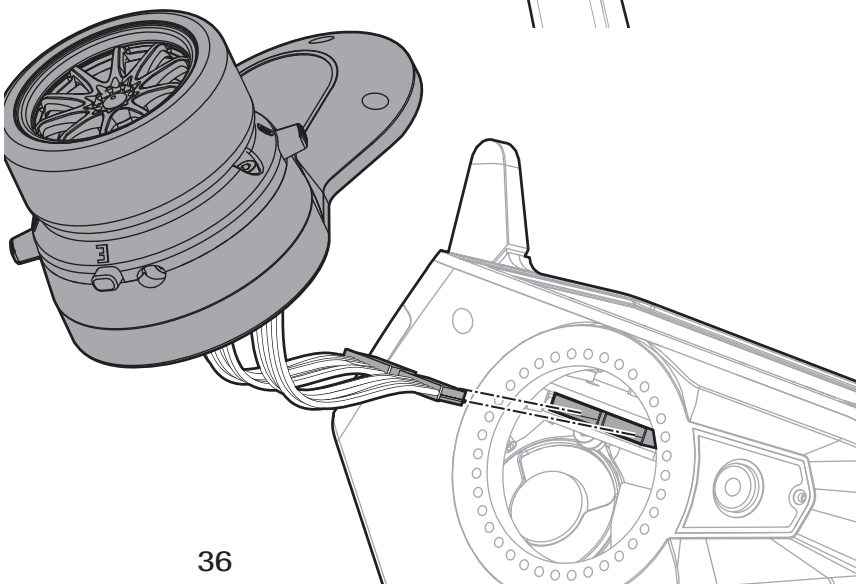

CHANGING FROM RIGHT HANDED TO LEFT HANDED -continued-

The knob/switch I assembly can also be switched with the headphone jack assembly on the back of the transmitter.

REMOVING THE ASSEMBLIES

- Turn off the iXSR
- Using a small .050 screwdriver, remove 1 screw from each assembly
- Lift up on each assembly.
- Carefully remove the wiring harness from the board inside the transmitter.

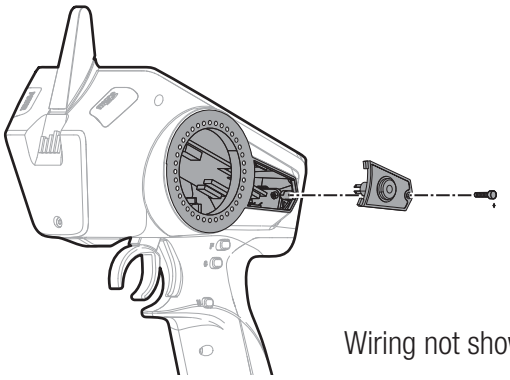

Wiring not shown

INSTALLING THE ASSEMBLIES

- Install the assemblies on the opposite face of the transmitter.
- Connect the wiring harness to the board inside the iXSR.

IMPORTANT: There is a 4 pin and 5 pin attachment on each side of the transmitter. The headphone jack connector will use the 4 pin connector and the Knob/Switch I will use the 5 pin connector.

- Carefully seat the assemblies into face of the transmitter being careful not to pinch any wires.
- Install the one Phillips head screw into each assembly.

INCLUDED SR2000/SR6000T RECEIVERS

SR2000 Micro Race receiver

The Spektrum™ SR2000 DSMR® Micro Race receiver is compatible with all Spektrum DSMR transmitters and is also backwards compatible with DSM2® transmitters. The SR2000 receiver is NOT compatible with DSM® transmitters.

Specifications

Type: DSMR

Dimensions (LxWxH): 25.5 x 17.6 x 13.6mm

Channels: 2

Weight: 5.5 g

Band: 2.4GHz

Voltage Range: 3.5–9.6V

SR6000T Telemetry Receiver

The Spektrum SR6000T Telemetry Receiver is compatible with all Spektrum DSMR surface transmitters. Telemetry functions require a Spektrum transmitter capable of telemetry.

Specifications

Type: DSMR with internal telemetry

Dimensions (LxWxH): 37.5 x 27.7 x 15.7mm

Antenna Length: 210mm

Channels: 6

Weight: 9.2 g

Band: 2.4GHz

Voltage Range: 3.5–9.6V

For full receiver manuals go to *https://www.spektrumrc.com/*

1-YEAR LIMITED WARRANTY

What this Warranty Covers

Horizon Hobby, LLC, (Horizon) warrants to the original purchaser that the product purchased (the "Product") will be free from defects in materials and workmanship for a period of 1 years from the date of purchase.

What is Not Covered

This warranty is not transferable and does not cover (i) cosmetic damage, (ii) damage due to acts of God, accident, misuse, abuse, negligence, commercial use, or due to improper use, installation, operation or maintenance, (iii) modification of or to any part of the Product, (iv) attempted service by anyone other than a Horizon Hobby authorized service center, (v) Product not purchased from an authorized Horizon dealer, (vi) Product not compliant with applicable technical regulations, or (vii) use that violates any applicable laws, rules, or regulations.

OTHER THAN THE EXPRESS WARRANTY ABOVE, HORIZON MAKES NO OTHER WARRANTY OR REPRESENTATION, AND HEREBY DISCLAIMS ANY AND ALL IMPLIED WARRANTIES, INCLUDING, WITHOUT LIMITATION, THE IMPLIED WARRANTIES OF NON-INFRINGEMENT, MERCHANTABILITY AND FITNESS FOR A PARTICULAR PURPOSE. THE PURCHASER ACKNOWLEDGES THAT THEY ALONE HAVE DETERMINED THAT THE PRODUCT WILL SUITABLY MEET THE REQUIREMENTS OF THE PURCHASER'S INTENDED USE.

Purchaser's Remedy

Horizon's sole obligation and purchaser's sole and exclusive remedy shall be that Horizon will, at its option, either (i) service, (ii) repair, or (iii) replace, any Product determined by Horizon to be defective. Horizon reserves the right to inspect any and all Product(s) involved in a warranty claim. Service, service and/or replacement decisions are at the sole discretion of Horizon. Proof of purchase is required for all warranty claims. SERVICE, REPAIR OR REPLACEMENT AS PROVIDED UNDER THIS WARRANTY IS THE PURCHASER'S SOLE AND EXCLUSIVE REMEDY.

Limitation of Liability

HORIZON SHALL NOT BE LIABLE FOR SPECIAL, INDIRECT, INCIDENTAL OR CONSEQUENTIAL DAMAGES, LOSS OF PROFITS OR PRODUCTION OR COMMERCIAL LOSS IN ANY WAY, REGARDLESS OF WHETHER SUCH CLAIM IS BASED IN CONTRACT, WARRANTY, TORT, NEGLIGENCE, STRICT LIABILITY OR ANY OTHER THEORY OF LIABILITY, EVEN IF HORIZON HAS BEEN ADVISED OF THE POSSIBILITY OF SUCH DAMAGES. Further, in no event shall the liability of Horizon exceed the individual price of the Product on which liability is asserted. As Horizon has no control over use, setup, final assembly, modification, use or misuse, no liability shall be assumed nor accepted for any resulting damage or injury. By the act of use, setup or assembly, the user accepts all resulting liability. If you as the purchaser or user are not prepared to accept the liability associated with the use of the Product, purchaser is advised to return the Product immediately in new and unused condition to the place of purchase.

Law

These terms are governed by Illinois law (without regard to conflict of law principals). This warranty gives you specific legal rights, and you may also have other rights which vary from state to state. Horizon reserves the right to change or modify this warranty at any time without notice.

WARRANTY SERVICES

Questions, Assistance, and Services

Your local hobby store and/or place of purchase cannot provide warranty support or service. Once assembly, setup or use of the Product has been started, you must contact your local distributor or Horizon directly. This will enable Horizon to better answer your questions and service you in the event that you may need any assistance. For questions or assistance, please visit our website at www.horizonhobby.com, submit a Product Support Inquiry, or call the toll free telephone number referenced in the Warranty and Service Contact Information section to speak with a Product Support representative.

Inspection or Services

If this Product needs to be inspected or serviced and is compliant in the country you live and use the Product in, please use the Horizon Online Service Request submission process found on our website or call Horizon to obtain a Return Merchandise Authorization (RMA) number. Pack the Product securely using a shipping carton. Please note that original boxes may be included, but are not designed to withstand the rigors of shipping without additional protection. Ship via a carrier that provides tracking and insurance for lost or damaged parcels, as Horizon is not responsible for merchandise until it arrives and is accepted at our facility. An Online Service Request is available at http://www.horizonhobby.com/content/service-center_render-service-center. If you do not have internet access, please contact Horizon Product Support to obtain a RMA number along with instructions for submitting your product for service. When calling Horizon, you will be asked to provide your complete name, street address, email address and phone number where you can be reached during business hours. When sending product to Horizon, please include your RMA number, a list of the included items, and a brief summary of the problem. A copy of your original sales receipt must be included for warranty consideration. Be sure your name, address, and RMA number are clearly written on the outside of the shipping carton.

NOTICE: Do not ship lithium batteries to Horizon. If you have any issue with a lithium battery, please contact the appropriate Horizon Product Support office.

Warranty Requirements

For Warranty consideration, you must include your original sales receipt verifying the proof-of-purchase date. Provided warranty conditions have been met, your Product will be serviced or replaced free of charge. Service or replacement decisions are at the sole discretion of Horizon.

Non-Warranty Service

Should your service not be covered by warranty, service will be completed and payment will be required without notification or estimate of the expense unless the expense exceeds 50% of the retail purchase cost. By submitting the item for service you are agreeing to payment of the service without notification. Service estimates are available upon request. You must include this request with your item submitted for service. Non-warranty service estimates will be billed a minimum of ½ hour of labor. In addition you will be billed for return freight. Horizon accepts money orders and cashier's checks, as well as Visa, MasterCard, American Express, and Discover cards. By submitting any item to Horizon for service, you are agreeing to Horizon's Terms and Conditions found on our website http://www.horizonhobby.com/content/service-center_render-service-center.

ATTENTION: Horizon service is limited to Product compliant in the country of use and ownership. If received, a non-compliant Product will not be serviced. Further, the sender will be responsible for arranging return shipment of the un-serviced Product, through a carrier of the sender's choice and at the sender's expense. Horizon will hold non-compliant Product for a period of 60 days from notification, after which it will be discarded without liability to Horizon.

10/15

WARRANTY AND SERVICE CONTACT INFORMATION

Country of Purchase	Horizon Hobby	Phone Number/ Email Address	Address
United States of America	Horizon Service Center (Repairs and Repair Requests)	servicecenter.horizonhobby.com/RequestForm/	2904 Research Rd Champaign, Illinois, 61822 USA
	Horizon Product Support (Product Technical Assistance)	productsupport@horizonhobby.com 877-504-0233	
	Sales	websales@horizonhobby.com 800-338-4639	
EU	Horizon Technischer Service	service@horizonhobby.de	Hanskampring 9 D 22885 Barsbüttel, Germany
	Sales: Horizon Hobby GmbH	+49 (0) 4121 2655 100	

FCC INFORMATION

FCC ID: BRWSPMR6420

This equipment complies with FCC and IC radiation exposure limits set forth for an uncontrolled environment. This equipment should be installed and operated with minimum distance 0mm between the radiator and/or antenna and your body (excluding fingers, hands, wrists, ankles and feet). This transmitter must not be co-located or operating in conjunction with any other antenna or transmitter.

Supplier's Declaration of Conformity

Spektrum iXSR 6 Channel Surface Transmitter w/Receiver (SPMR6420);

This device complies with part 15 of the FCC Rules. Operation is subject to the following two conditions: (1) This device may not cause harmful interference, and (2) this device must accept any interference received, including interference that may cause undesired operation.

CAUTION: Changes or modifications not expressly approved by the party responsible for compliance could void the user's authority to operate the equipment.

NOTE: This equipment has been tested and found to comply with the limits for a Class B digital device, pursuant to part 15 of the FCC Rules. These limits are designed to provide reasonable protection against harmful interference in a residential installation. This equipment generates, uses and can radiate radio frequency energy and, if not installed and used in accordance with the instructions, may cause harmful interference to radio communications. However, there is no guarantee that interference will not occur in a particular installation. If this equipment does cause harmful interference to radio or television reception, which can be determined by turning the equipment off and on, the user is encouraged to try to correct the interference by one or more of the following measures:

- Reorient or relocate the receiving antenna.
- Increase the separation between the equipment and receiver.
- Connect the equipment into an outlet on a circuit different from that to which the receiver is connected.
- Consult the dealer or an experienced radio/TV technician for help.

Horizon Hobby, LLC
2904 Research Road,
Champaign, IL 61822
Email: compliance@horizonhobby.com
Web: HorizonHobby.com

IC INFORMATION

IC: 6157A-SPMR6420

CAN ICES-3 (B)/NMB-3(B)

This device contains license-exempt transmitter(s)/receivers(s) that comply with Innovation, Science, and Economic Development Canada's license-exempt RSS(s). Operation is subject to the following 2 conditions:

1. This device may not cause interference.
2. This device must accept any interference, including interference that may cause undesired operation of the device.
   5150-5250MHz Use indoors only

COMPLIANCE INFORMATION FOR THE EUROPEAN UNION

EU Compliance Statement:
Spektrum iXSR 6 Channel Surface Transmitter w/Receiver (SPMR6420); Hereby, Horizon Hobby, LLC declares that the device is in compliance with the following: EU Radio Equipment Directive 2014/53/EU; RoHS 2 Directive 2011/65/EU; RoHS 3 Directive - Amending 2011/65/EU Annex II 2015/863.

The full text of the EU declaration of conformity is available at the following internet address: http://www.horizonhobby.com/content/support-render-compliance.

NOTE: This product contains batteries that are covered under the 2006/66/EC European Directive, which cannot be disposed of with normal household waste. Please follow local regulations.

Wireless Frequency Range and Wireless Output Power

Control:
Frequency Band: 2402-2478MHz
Max EIRP: [illegible]

2.4 GHz WiFi:
Frequency Band: 2412-2462MHz
Max EIRP: 19.5 dBm

5GHz WiFi:
Frequency Band: 4900-5845MHz
Max EIRP: 15.5 dBm

Bluetooth:
Frequency Band: 2404-2480MHz
Max EIRP: [illegible] dBm

FPO
FPO
FPO

EU Manufacturer of Record:
Horizon Hobby, LLC
2904 Research Road
Champaign, IL 61822 USA

EU Importer of Record:
Horizon Hobby, GmbH
Hanskampring 9
22885 Barsbüttel Germany

WEEE NOTICE:

This appliance is labeled in accordance with European Directive 2012/19/EU concerning waste of electrical and electronic equipment (WEEE). This label indicates that this product should not be disposed of with household waste. It should be deposited at an appropriate facility to enable recovery and recycling.

E328

IC Caution:
Note : Cet appareil est conforme à la Partie 15 des règlements de la FCC et aux normes RSS de l'Industrie du Canada. Son fonctionnement est soumis aux deux conditions suivantes : (1) cet appareil ne doit pas causer des interférences nuisibles, et (2) cet appareil doit accepter toute interférence reçue, y compris les interférences qui peuvent provoquer un fonctionnement indésirable.

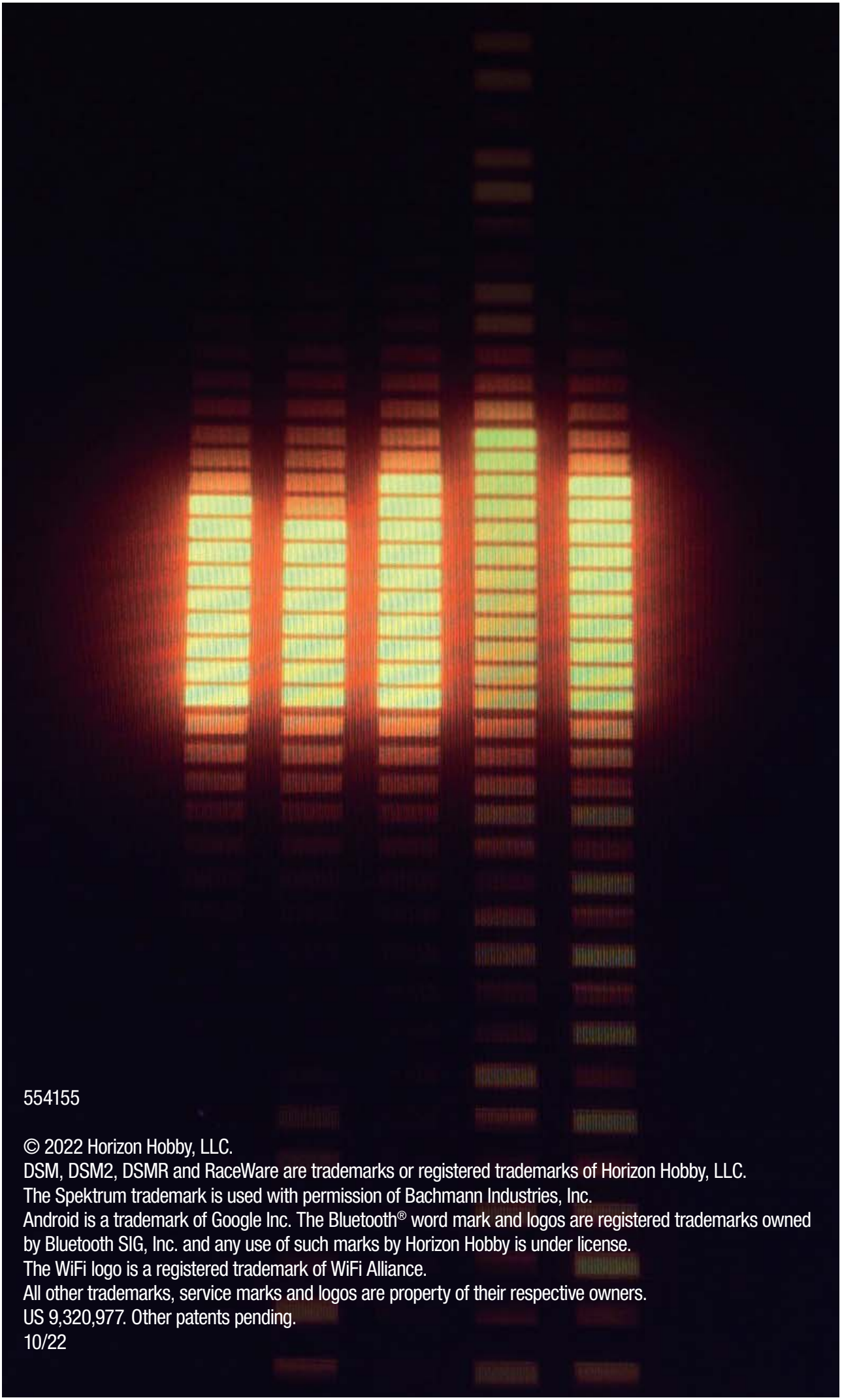

554155

© 2022 Horizon Hobby, LLC.
DSM, DSM2, DSMR and RaceWare are trademarks or registered trademarks of Horizon Hobby, LLC.
The Spektrum trademark is used with permission of Bachmann Industries, Inc.
Android is a trademark of Google Inc. The Bluetooth® word mark and logos are registered trademarks owned by Bluetooth SIG, Inc. and any use of such marks by Horizon Hobby is under license.
The WiFi logo is a registered trademark of WiFi Alliance.
All other trademarks, service marks and logos are property of their respective owners.
US 9,320,977. Other patents pending.
10/22