VICTROLA™

by *innovative* technology.

MODEL: VTA-200B

6-IN-1 NOSTALGIC ENTERTAINMENT CENTER

Important Safety Instructions 3
Product Overview 4
Setup / Basic Operation 7
Listening to a Vinyl Record 7
Listening to a CD 8
Listening to the FM Radio 9
Listening to an External Audio Device (AUX Mode) 9
Listening to an External Audio Device (Bluetooth Mode) 10
Listening to a Cassette Tape 10
Maintenance / Proper Handling 10
Specifications 12
Troubleshooting Guide 13
FCC Statement and other warnings 15

CAUTION

RISK OF ELECTRIC SHOCK

DO NOT OPEN

AVERTISSEMENT:

RISQUE DE CHOC ÉLECTRIQUE – NE PAS OUVRIR.

- This lightning flash with arrowhead symbol within an equilateral triangle is intended to alert the user to the presence of non-insulated "dangerous voltage" within the product's enclosure that may be of sufficient magnitude to constitute a risk of electric shock.
- **Warning:** To reduce the risk of electric shock, do not remove cover (or back) as there are no user-serviceable parts inside. Refer servicing to qualified personnel.
- The exclamation point within an equilateral triangle is intended to alert the user to the presence of important operating and maintenance instructions in the literature accompanying the appliance.

CAUTION: To reduce the risk of fire or electric shock, do not expose this appliance to rain or moisture.
WARNING: To prevent electric shock, do not use this (polarized) plug with an extension cord, receptacle or other outlet unless the blades can be fully inserted to prevent blade exposure

WARNING: Invisible laser radiation when open and interlock failed or defeated. Avoid direct exposure to laser beam.
PRODUCT COMPLIES WITH DHHS RULE 21 CFR SUBCHAPTER J IN EFFECT AT DATE OF MANUFACTURE

This equipment is a Class II or double insulated electrical appliance. It has been designed in such a way that it does not require a safety connection to electrical earth.

Important Safety Instructions

1. Read these instructions – All the safety and operating instructions should be read before this product is operated.
2. Keep these instructions- The safety and operating instructions should be retained for future reference.
3. Heed all warnings – All warnings on the appliance and in the operating instructions should be adhered to.
4. Follow all instructions – All operating and use instructions should be followed.
5. Do not use this apparatus near water – The appliance should not be used near water or moisture – for example, in a wet basement or near a swimming pool, and the like.
6. Clean only with dry cloth.
7. Do not block any ventilation openings. Install in accordance with the manufacturer's instructions.
8. Do not install near any heat sources such as radiations, heat registers, stoves, or other apparatus (including amplifiers) that produce heat.
9. Do not defeat the safety purpose of the polarized or grounding plug. A polarized plug has two blades with one wider than the other. A grounding plug has two blades and a third grounding prong. The wide blade or the third prong is provided for your safety. If the provided plug does not fit into your outlet, consult an electrician for replacement of the obsolete outlet.
10. Protect the power cord from being walked on or pinched particularly at the plugs, convenience receptacles, and at the point where they exit from the apparatus.
11. Only use attachments/accessories specified by the manufacturer.
12. Use only with the cart, stand, tripod, bracket, or table specified by the manufacturer, or sold with the apparatus. When a cart or rack is used, use caution when moving the cart/apparatus combination to avoid injury from tip-over.

13. Unplug the apparatus during lighting storms or when unused for long periods of time.
14. Refer all servicing to qualified personnel. Servicing is required when the apparatus has been damaged in any way, such as power supply cord or plug is damaged, liquid has been spilled or objects have fallen into the apparatus has been exposed to rain or moisture, does not operate normally, or has been dropped.

15.

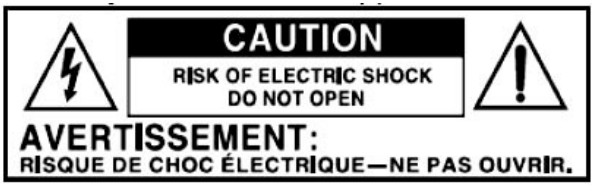

-This lightning flash with arrowhead symbol within an equilateral triangle is intended to alert the user to the presence of non-insulated “dangerous voltage” within the product’s enclosure that may be of sufficient magnitude to constitute a risk of electric shock.
-Warning: To reduce the risk of electric shock, do not remove cover (or back) as there are no user-serviceable parts inside. Refer servicing to qualified personnel.
-The exclamation point within and equilateral triangle is intended to alert the user to the presence of important operating and maintenance instructions in the literature accompanying the appliance.

16.

This equipment is a Class Ⅱ or double insulated electrical appliance. It has been designed in such a way that it does not require a safety connection to electrical earth.

17. The mains plug is used as disconnect device, the disconnect device shall remain readily operable.

18. To reduce the risk of fire or electric shock, do not expose this apparatus to rain or moisture. The apparatus shall not be exposed to dripping or splashing and that no objects filled with liquids, such as vases, shall not be placed on apparatus.

19. Use the equipment in a moderate climate.

ACCESSORIES INCLUDED

- RCA LINE OUT CABLE
- INSTRUCTION MANUAL
- WARRANTY (BACK OF MANUAL)
- 45 RPM ADAPTER

Product Overview

Front View

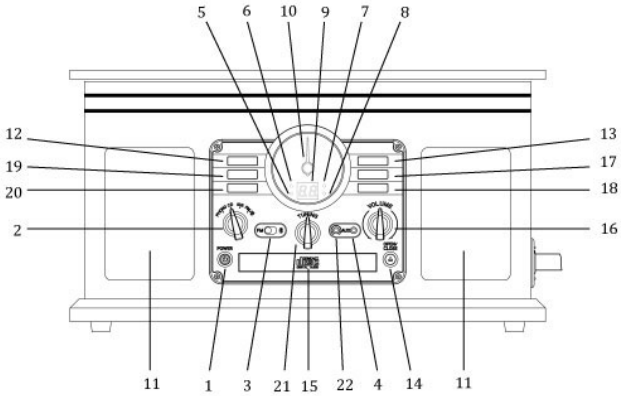

1. **POWER** ⏻ Push to turn the unit ON or OFF.
2. **"PHONO, CD, AUX, FM/ ᛒ" SELECTION KNOB** Rotate to select your desired function.
3. **"FM", " ᛒ" SLIDE SWITCH** Slide to select either FM or Bluetooth.
4. **3.5mm AUX IN JACK** Connects your external source to the AUX IN jack.
5. **PLAY INDICATOR** Illuminates when CD is playing.
6. **ST/BT INDICATOR** Blue light flashes when the unit is waiting for pairing. Blue light stays lit when the external device is connected to the unit. Red light illuminates when station is received in stereo playing mode.
7. **PROGRAM INDICATOR** Illuminates when the program playback is set.
8. **REPEAT INDICATOR** Red light stays lit when all tracks repeat. Red light flashes when a single track is repeating.
   ***(Note:** This indicator only works in CD mode.)*
9. **LED DISPLAY**
10. **TUNING DIAL POINTER**
11. **STEREO SPEAKERS**
12. **STOP** ■ Press to stop playback or cancel the program setting.
13. **PLAY/PAUSE** ▶❚❚ Press to start playback, press again to pause.
    *(**Note:** This button only works in CD, Bluetooth mode.)*
14. **OPEN/CLOSE** ⏏ In CD mode, use to open and close the disc tray.
15. **DISC TRAY**
16. **"VOLUME" KNOB** Turn to adjust volume.

17/18. NEXT/PREVIOUS TRACK & FF/REWIND (⏮ / ⏭)
In CD Mode, press once to skip to the next/previous track. Press and hold to fast forward/rewind.
*(**Note:** This button will not work in PHONO, FM, AUX mode)*

19. **"PROGRAM"** Press to set the program playback.
    ***(Note:** This indicator only works in CD mode.)*
20. **"REPEAT"** Press to select the repeat mode.
    ***(Note:** This indicator only works in CD mode.)*
21. **RADIO TUNER KNOB** In FM mode, turn to tune in a station.
22. **3.5mm EARPHONE JACK**
    Accepts headphone/earphone plugs.

<u>Right Side View</u>

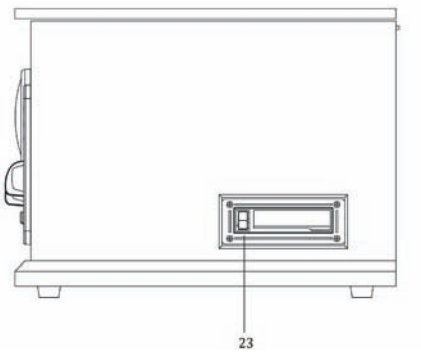

23. CASSETTE FF & EJECT Press halfway to fast forward, press all the way to end and eject the tape.

Rear View

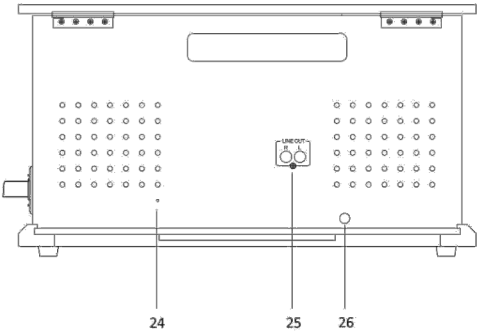

24. FM wire antenna
While tuned to a station in FM mode, extend the wire and reposition to adjust for best reception.

25. LINE OUT jacks
For amplifier device with RCA auxiliary input sockets, insert the white and red plugs on the RCA cable into the unit. Insert the opposite end into the amplifier device. Be sure to connect the white plug to the white jack and the red plug to the red jack.

26. AC Power Cord
Connect the AC plugs into a wall outlet.
It is strongly recommended that this product should be operated only from the type of power source indicated on the marking label.

Parts of the Turntable

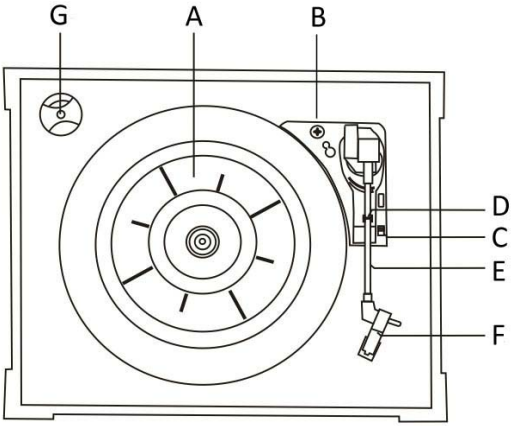

A. Turntable.

B. Safety Screw (for transport) Before using the unit, turn the screw **clockwise** using a coin or screwdriver.
Important: *When you transport the unit, turn the screw counterclockwise to secure the turntable.*

C. Speed Selector.

D. Tone Arm holder.

E. Tone Arm. Before use, completely loosen the fixed rope on the tone arm and lift the tone arm up.

F. STYLUS .

G. 45 RPM adaptor.

Setup / Basic Operation

Setup

1. Remove white protective needle cover by gently pulling towards front of unit.
2. Remove any packaging materials from the unit.
3. Connect the AC power cord to a wall outlet.

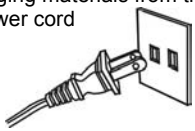

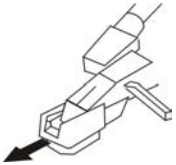

Note:
-It is strongly recommended that this product should be operated only from the type of power source indicated on the marking label.
-To prevent interference, avoid bundling audio signal cables together with the AC power cord.

Basic Operation

1. Push the POWER button to turn the unit on.
2. Select the source by turning the selection knob (PHONO/AUX/CD/FM/BT).
3. Rotate the VOLUME knob to adjust to the desired sound level.

Listening through RCA LINE OUT

For amplifier device listening, first reduce the volume level to minimum. Insert the white and red plugs on the RCA cable into the unit, then insert the opposite end into the amplifier device. Be sure to connect the white plug to the white jack and the red plug to the red jack.

Listening through Earphones/Headphones (*not included)*

For private listening, first reduce the volume level to minimum. Insert your headphones' plug into the 3.5mm jack, then adjust the volume up by turning the VOLUME knob.

Note: *The speakers will automatically be deactivated while headphones are plugged in.*

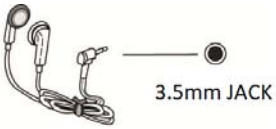

CONDENSATION WARNING:
When the unit is moved from a cold or warm place, or is used following a sudden temperature change, there is the danger that water vapor in the air may condense on the unit, preventing proper operation. In such cases, leave the unit for 1-2 hours after plugging it into an AC outlet to allow it to stabilize at the temperature of its surroundings.

Listening to a Vinyl Record

1. Select "PHONO" function.
2. Gently open the top cover.
   Note*: Be careful not to pinch your fingers when opening/closing the top cover.*
3. Place a vinyl record on the turntable. When playing a 45 RPM record, use the included adaptor.
4. Select the appropriate speed.

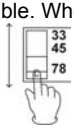

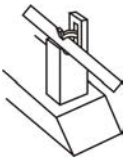

5. Remove the tone arm-rest holder to release the tone arm.
6. Move the tone arm gently to the edge of the record (or the starting point of a track).

The turntable will begin to turn.

7. When the record reaches its end, tone arm will stop at the center of the record and you must lift and return the tone arm to the tone arm rest manually. Lock the tone arm-rest holder to protect the tone arm.

***Important**:*
- Closing the top cover will help prevent dust from settling on the turntable.
- Always relock the tone arm clip before transporting the unit.
- Do not place anything on top of the turntable cover, especially while playing a record.

Listening to a CD

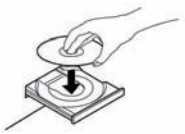

1. Select "CD" function.
   ***(Note:** When no disc is set, "no" will appear on the display.)*
2. Press the OPEN/CLOSE (⏏) button
   ***(Note:** This button only works in CD mode.)*
3. Place a disc on the tray with the printed label face up.
4. Press the OPEN/CLOSE button (⏏) to close the tray.
5. Press the PLAY/PAUSE button (▶II) to begin playback.
   ***(Note:** The CD playback will start automatically.)*
6. To temporarily pause playback, press the PLAY/PAUSE button (▶II). Press again to resume.
7. To skip tracks forward or backward, press the corresponding skip button (I◀◀ or ▶▶I).
8. To fast forward/ rewind within a track, press and hold down the corresponding skip button until the desired position is reached.
9. To stop playback, press the STOP ■ button

Important:
- *Never place more than one disc on the tray.*
- *The disc must be placed in the center of the disc tray. An incorrectly loaded disc can permanently damage the tray door mechanism.*
- *Do not push the CD tray – always use the OPEN/CLOSE button.*
- *It takes a moment for the unit to load a disc, during which all buttons will be temporarily deactivated.*

Repeat Playback

Each time the REPEAT button is pressed, the repeat mode will cycle through the following options:

REPEAT 1(Repeat one track)
The repeat indicator will flash and the current track will be played repeatedly. If you press the (I◀◀ or ▶▶I) button to select another track, the track you select will be played repeatedly.

REPEAT ALL (Repeat the entire CD)
The repeat indicator will stay lit and the entire CD will be played repeatedly.

Notes:
- Repeat playback works with CD discs only.

Programmed Playback
Up to 20 tracks can be programmed to play in the desired order.
Notes:
- Programmed playback works with CD discs only.

1. Select "CD" mode, then load a CD.

2. While the CD is stopped, press the PROGRAM button.
3. "PROGRAM" indicator lights up and "01" blinks on the display.
4. Press (⏮ or ⏭) to select a track number.
5. Press the PROGRAM button again to set the next program track, "02" appears and blinks..
Repeat steps 4 thru 5 to program the additional tracks.
6. When the selection of track numbers has been finished, press the PLAY button (⏯) to start program playback.
*(**Note:** when all 20 program tracks are set, you press PROGRAM button and "FU" will appears on the display)*
7. To cancel the program mode, press the STOP (■) twice,the program indicator won't light.

To check the programmed order
In the stop mode, press (⏮ or ⏭) repeatedly to show the track numbers which have been programmed.

To add a track to the end of the programmed order:
In the stop mode, press the PROGRAM button.
Select a track number by pressing (⏮ or ⏭), then press the PROGRAM button.
The current track will be added to the end of the program.

Listening to the FM Radio

1. Select "FM/ " mode.
2. Slide the slide switch on "FM".
3. Tune to the desired station using the Radio Tuner Knob.
   ***Note:** In FM Mode, the "ST/BT" indicator lights up red when tuning in the stereo reception station.*

Adjusting for Best Reception
FM broadcast: Extend and reposition the FM antenna.

Listening to an External Audio Device (AUX Mode)

In AUX (auxiliary) mode, this unit can play audio from an external audio source (iPod, MP3 Player, Portable CD Player, etc.)

There is a AUX IN jack on the front side of the unit. When connecting a device that has a headphone jack, use a cable with a 3.5mm plug on both ends with the front AUX IN jack.

1. Plug one end of the AUX IN cable (not included) into the AUX IN jack.
2. Plug the other end of the cable into the headphone jack of the external audio source.

***NOTE:** All operations are only available on your external device.*

***Important:** If the front AUX IN and rear RCA LINE OUT are connected at the same time, only the front AUX IN will be active.*

Listening to an External Audio Device (Bluetooth Mode)

In BT (Bluetooth) mode, this unit can play music from external devices which have a built-in Bluetooth feature.

GETTING CONNECTED USING BLUETOOTH

1. Select "FM/ " mode.

2. Slide the slide switch on " " and the ST/BT indicator will flash blue.
3. Turn ON the Bluetooth function on your external device.
NOTE: *The effective distance between your external device and this apparatus is 10 meters (33ft).*
4. Wait for **"Wooden Music Center"**to appear onthe paired devices list of your external device and press**"Wooden Music Center".**
In some instances: a window will ask you a password. Fill in "0000" then press "OK" on your external device.
5. A few seconds later your Bluetooth connection is successful and the blue indicator stays lit.
6. Press the PLAY/PAUSE button (▶II) to begin playback.
7. To temporarily pause playback, press the PLAY/PAUSE button (▶II). Press again to resume.
8. To skip to the previous or next tracks, press the corresponding skip button (I◀◀ or ▶▶I) to listen.

NOTE: *Stop, fast forward / rewind are only available on your external device.*

Listening to a Cassette Tape

1. Load an audio cassette tape into the unit (located on the left side of the unit). Playback will automatically begin.
2. Press button halfway to Fast Forward the tape.
   Press button lightly and playback will resume.
3. Press button completely down to end playback and eject tape.

NOTE: *When loading in a cassette tape, the SELECTION KNOB function will be temporarily overridden until the cassette tape is ejected.*

Maintenance / Proper Handling

Compact Disc Handling

- Always place the disc on the disc tray with the label side facing upward (compact discs can be played/recorded only on one side)
- To remove a disc from its storage case, press down on the center of the case and lift the disc upward, holding it carefully by its edges.
- To clean a disc, wipe the surface from the center hole outward towards the outer edge with a soft, dry cloth.
- Never use such chemicals as record spray, antistatic sprays or fluid, benzine or thinner to clean discs; they will irreparably damage the disc's plastic surface.
- Discs should be returned to their cases after use to protect from dust and scratches.
- Do not expose discs to direct sunlight, high humidity, or high temperature for extended periods of time.
- Printable CD-R and CD-RW discs are not recommended, as the label side may become sticky and damage the unit.
- Use a soft oil-based felt-tipped pen to write information on the label side. Never use a ball-point or hard-tipped pen, as doing so may damage the recorded side.
- Do not use irregularly-shaped CDs (octagonal, heart shaped, business card size, etc), as they will damage the unit.
- Read all precautions supplied with any CD-R or CD-RW disc
- Never handle a disc with dirty fingers.
- Never insert a disc that has a crack on the surface.

Handling Vinyl Records

- Do not touch the record's grooves. Only handle records by the edges or the label with clean hands. Touching the record surface will cause your record's quality to deteriorate.
- To clean a record, use a soft anti-static cloth to gently wipe the record surface.
- Keep records in their protective sleeves when not in use.
- Always store records upright on their edges
- Avoid placing records in direct sunlight, close to a heat source (radiators, stoves, etc.), or in a location subject to vibration, excessive dust, heat, cold or moisture.

General Care

- When removing the power plug from the wall outlet, always pull directly on the plug. Never pull the cord.
- To keep the laser pickup clean, do not touch it, and do not forget to close the disc tray.
- Do not attempt to clean the unit with chemical solvents as this might damage the finish.
- For cleaning, only use a clean, dry cloth.
- In order to shut off the power to this product completely, unplug the power cord from the wall outlet. Be sure to unplug the unit if you do not intend to use it for an extended period of time.

How to Replace the Turntable Stylus

The stylus should last about 50 hours under normal use. However, it is recommenced that the stylus be replaced as soon as you notice a change in sound quality. Prolonged use of a worn-out stylus may damage the record. The highest speed of 78 RPM records would wear out the stylus more quickly.

Removing the old stylus:

1. Set a screwdriver at the tip of the stylus and push downward (A).
2. Remove the stylus by pulling it simultaneously downward and forward.

Installing a new stylus:

1. Hold the front tip of the stylus and insert its rear edge (B) first.
2. Push the stylus upwards (C) until the tip locks into place.

***Caution*:**

- *Do not bend the stylus.*
- *Do not touch the needle to avoid injury your hand.*
- *Turn off the unit's power before you replace the stylus.*
- *Keep out of reach of children.*

Specifications

GENERAL

Power Requirements	AC 120 V~ 60 Hz
Power Consumption	30W
Dimensions (W x H x D)	460 x 255 x 340mm | 18 x 10 x 13.4in (approx.)
Weight	7 kg. | 16 lbs (approx.)

AMPLIFIER

Output Power	5 W + 5 W
Frequency Response	60 to 20,000 Hz

SPEAKER SYSTEM

Type	2-way
Impedance	8 ohms
Output Power	Max. 6W

FM Radio

Range	88 to 108 MHz

CD PLAYER

Frequency Response	60 to 20, 000 Hz +/-4 dB
Signal-to-Noise Ratio	55 dB (IEC-A)

CASSETTE PLAYER

Track System	*4 Track, 2 channel stereo*
Tape Speed	*4.8 cm/sec*
Wow and Flutter	*0.4% (WRMS)*
Frequency Response	*125 to 6300 Hz +/-6 dB*

RECORD PLAYER

Motor	DC servo motor
Drive System	Belt Drive
Speeds	33-1/3 rpm, 45 rpm and 78 rpm
S/N Ratio	More than 50 dB
Cartridge Type	Ceramic Stereo Cartridge
Stylus	ITRRS-300

BLUETOOTH

Bluetooth Version	Bluetooth V2.1
Bluetooth Profiles	A2DP, AVRCP
Bluetooth Frequency range	2.402GHz-2.480GHz
Operating Distance	10 meters (33 ft.)

Troubleshooting Guide

	Symptom	Possible Cause	Solution
GENERAL	• Unit will not power on.	• Unit is unplugged.	• Connect the unit to the AC power supply.
	• No sound output from speakers.	• The volume level is set too low. • The input selector does not match the playback source.	• Adjust the volume. • Select the correct input source.
	• Noise/Distortion in sound output.	• The unit is too close to a TV set or another interfering device.	• Turn off the TV or other appliance, and relocate the unit.
	• Unit fails to respond.	• It might result from external factors such as ESD (Electro-static discharge).	• Disconnect the power cord and external audio device. Re-plug the power cord after one minute.
TAPE	• The tape does not play.	• The cassette tape is not inserted properly. • The tape has reached the end.	• Insert the cassette tape correctly. • Flip the cassette.
FM RADIO	• Cannot listen to any station, or signal appears weak.	• The station is not tuned-in properly. • A TV set is being used nearby and is interfering with the radio reception.	• Properly tune-in the desired station. • Turn-off the interfering TV set.
	• The sound is distorted.	• The antenna is not oriented properly.	• Re-orient the antenna until reception improves.
CD PLAYER	• CD stops immediately after starting, or unit pauses or stops during play.	• The CD is inserted upside down. • The CD is dusty or dirty or there is condensation on the CD.	• Insert the CD with the printed side right-side up. • Carefully clean and dry the CD.
	• No sound.	• The CD player is paused.	• Press the PLAY/PAUSE button.
	• CD playback is noisy, or playback stops or skips.	• The CD is scratched, damaged or warped. • The disc is very dirty.	• Replace CD with an undamaged one. • Carefully clean the CD.
	• CD tray will not open.	• AM/FM mode is selected.	• Select AUX, PHONO, CD, or TAPE mode.
	• Buttons are not functioning correctly.	• The unit is processing information (“--- Busy” is displayed) • The unit needs to be restarted	• Wait until the unit finishes processing. • Turn the unit off, then on again.
PHONO	• Decline in turntable audio performance	• The turntable stylus is worn out	• Replace the stylus.
AUX	• No sound output with external audio device plugged into rear AUX in jack.	• Both AUX in jacks (front and rear) are plugged.	• Unplug the front AUX in Jack.

Bluetooth	• No sound	• The unit is not switched to Bluetooth mode • Your device's and/or the unit's volume is not turn up. • Your device is too far from the unit or there're some obstacle between your device and the unit	• Ensure the unit is switched to BT mode. • Move your Bluetooth device closer to unit • Turn up the volume on your portable device and/or the unit. • Turn OFF your Bluetooth device and unit. Then power them both back ON
	• Sound has a lot of static	• Your device is too far away	• Bring your device closer to the turntable
	• Unable to pair with a Bluetooth device	• Your device doesn't have Bluetooth connectivity. • The Bluetooth pairing is not successful	• Confirm that your device is Bluetooth compatible. • Re-pair the unit and device again.

For further assistance with your product, call Innovative Technology at
TOLL FREE# 1-877-ITECH-97 (1-877-483-2497).

Please note: As a result of continual improvements, the design and specifications of this product are subject to change without notice.

Made in China.

Bluetooth is a registered trademark of Bluetooth SIG, Inc.
Other trademarks and trade names are those of their respective owners.

FCC Statement

Warning: Changes or modifications to this unit not expressly approved by the party responsible for compliance could void the user authority to operate the equipment.

NOTE: This equipment has been tested and found to comply with the limits for Class B digital device, pursuant to part 15 of the FCC Rules. These limits are designed to provide reasonable protection against harmful interference in a residential installation. This equipment generates, uses and can radiate radio frequency energy and, if not installed and used in accordance with the instructions, may cause harmful interference to radio or television reception, which can be determined by turning the equipment off and on, the user is encouraged to try to correct the interference by one or more of the following measures:

-Reorient or relocate the receiving antenna.

-Increase the separation between the equipment and the receiver.

-Connect the equipment into an outlet on a circuit different from that to which the receiver is connected.

-Consult the dealer or an experienced radio/TV technician for help.

This device complies with Part 15 of the FCC Rules. Operation is subject to the following two conditions: (1) This device may not cause harmful interference, and (2) this device must accept any interference received, including interference that may cause undesired operation.

FCC Radiation Exposure Statement This equipment complies with FCC radiation exposure limits set forth for an uncontrolled environment. This equipment should be installed and operated with minimum distance 20cm between the radiator & your body

CALIFORNIA PROP 65 WARNING

"WARNING" This product contains chemicals known to the State of California to cause birth defects or other reproductive harm. For more information on these regulations and a list of chemicals, log on the following website address :

http://www.oehha.ca.gov/prop65.html

IC warning

-English:

This device complies with Industry Canadas licence-exempt RSSs. Operation is subject to the following two conditions:

(1) This device may not cause interference, and

(2) This device must accept any interfence, including interfence that may cause undesired opration of the device.

-French:

Le présent appareil est conforme aux CNR d'Industrie Canada applicables aux appareils radio exempts de licence. L'exploitation est autorisée aux deux conditions suivantes :

(1) l'appareil ne doit pas produire de brouillage, et

(2) l'utilisateur de l'appareil doit accepter tout brouillage radioélectrique subi, même si le brouillage est susceptible d'en compromettre le fonctionnement."

Victrola is a registered trademark of Innovative Technology Electronics Corp.

Innovative Technology Electronics Corp.
Limited Warranty: 90 Days Labor, One Year Parts

Innovative Technology Electronics Corp. (IT) warrants the product to be free from “Defects” in materials under normal use for a period of “One Year” from the date of the original purchase. The Warranty is “Not” transferable. IT agrees, within the initial “90 Day” period, to repair or replace the product if it is determined to be defective at “No Charge”. It is further agreed that IT will cover the cost to repair or replace damaged “Parts” only for a total period of “One Year” from the date of the original purchase. The warranty does not cover cosmetic damage, antennas, AC cords, cabinets, headbands, ear-pads, or damage due to line power surges, connection to improper voltage supply or settings, misuse, mishandling, accident, acts of God or attempted repair by an unauthorized service agent. **To obtain service, the purchaser MUST present an original sales receipt / proof of purchase. Please contact us at www.ithomeproducts.com to request an RMA (Return Material Authorization) number to return products for service or replacement.** Returns without an RMA number on the package will be refused and returned to sender. Upon receipt of the returning item and our full inspection (IT) may issue a replacement to customer for the same item or of one that has equivalent value and features. To return an item, supply full name, return address, phone number, item purchased, receipt of purchase and reason for return to obtain RMA number.

All returns must be in the original packaging or reasonable substitute to prevent damage.
Customer “Must” include full name, shipping address and telephone number inside of package. No return will be shipped back to a PO Box or APO address.
Please include your check or money order in the amount of

- **USD$5.00 for items $10.00 to $39.99 (Price Paid Per Unit)**
- **USD$10.00 for items $40.00 to $99.99. (Price Paid Per Unit)**
- **USD$16.00, for items $100.00 and up. (Price Paid Per Unit)**
- **Shipping fees are non-refundable**

to be payable to Innovative Technology Electronics Corp.(for handling and return shipping charges) (IT) will not be responsible for delays or unprocessed claims resulting from a purchaser’s failure to provide any / all of the necessary information.
Send all inquiries or RMA request via our website www.ithomeproducts.com/support.

Innovative Technology Electronics Corp.
1 Channel Drive, Port Washington, NY 11050
Toll free: 1-877-483-2497
Website for support: www.ithomeproducts.com/support

There are no express warranties except as listed above.
REPAIR OR REPLACEMENT AS PROVIDED UNDER THIS WARRANTY IS THE EXCLUSIVE REMEDY OF THE CUSTOMER, (IT) SHALL NOT BE LIABLE FOR ANY INCIDENTAL OR CONSEQUENTIAL DAMAGES FOR BREACH OF ANY EXPRESS OR IMPLIED WARRANTY ON THIS PRODUCT EXCEPT TO THE EXTENT PROHIBITED BY APPLICABLE LAW. ANY IMPLIED WARRANTY OF MERCHANTABILITY OR FITNESS FOR A PARTICULAR PURPOSE ON THIS PRODUCT IS LIMITED IN DURATION TO THE DURATION OF THIS WARRANTY.
Some states do not allow the exclusion or limitation of incidental or consequential damages, or limitations on how long an implied warranty lasts, so the above exclusions or limitations may not apply to you. This warranty gives you specific legal rights and you may also have other rights, which vary from state to state.