CE

No. LBA.O.10.911/98 JTSO
DFS-No.: B-7850/97

FSG 90
FSG 90-H1

118.000 ... 136.975 MHz

6W - 10W VHF/AM AIRBAND TRANSCEIVERS

Dual Mode: 8.33 kHz/25 kHz or '25 kHz only' channel spacing

Installation & Operation

applies for FSG 90 (6W) article no. F10185
applies for FSG 90-H1 (10W) article no. F10302

Before installing and operating the transceiver, please read this manual thoroughly!

Please observe the Safety Information!

Keep for further use!

Document No.:	IM 031.00
Article no.:	D10024
Date of Issue	November 2000

Certified ISO 9001 Zertifiziert

Walter DITTEL GmbH Luftfahrtgerätebau
Avionics Division
Erpftinger Strasse 36 ★ D-86899 Landsberg ★ Germany
Telephone +49 (0)8191/ 3351-0 ★ Fax +49 (0)8191/ 3351-49
e-mail: firma@dittel.com ★ **Internet:** http://www.dittel.com

WARRANTY - COPYRIGHT – SERVICE INFORMATION

Warranty

The details and data in this operator's manual correspond to the respective state of technology on the day of printing. We reserve our right to change without prior notice due to new technological design or corresponding new production technology.

Walter Dittel GmbH takes no guarantee for these documents with respect to application and interpretation.

Walter Dittel GmbH ("Warrantor") warrants to the purchaser of new radio equipment of the warrantor's manufacture that such equipment shall be free from defects in material and workmanship for a period of 24 month from the date of delivery. Equipment and accessory items not manufactured by the Warrantor carry the standard warranty of the manufacturer thereof.

This warranty does not cover equipment which has been

1. **damaged or not maintained as reasonable and necessary,**
2. **modified in any way,**
3. **improperly installed,**
4. **repaired by someone other than the warrantor or an authorized warranty avionics shop, or**
5. **used in a manner or purpose for which the equipment was not intended.**

This warranty shall not extend to incidental or consequential damage arising from operation of the equipment or from any claimed breach of this warranty.

Copyright © 1999 Walter Dittel GmbH

All rights reserved. This document contains proprietary information and such information may not be disclosed to others for any purpose nor used for manufacturing purposes without prior written permission of the manufacturer Walter Dittel GmbH, Luftfahrtgeraetebau, D-86899 Landsberg am Lech, Germany.

In this document no mention is made of patents, trademark rights, or other proprietary rights which may attach to certain words or entries. The absence of such mention, however, in no way implies that the words or entries in question are exempt from such rights.

Service Information

Should any unusual problem arise or further information be desired, please contact your nearest Walter Dittel representative or the Walter Dittel GmbH Avionics Department, Erpftinger Strasse 36, D-86899 Landsberg, Germany.

The information in this Operator's Manual does not profess to include all the details of design, production, or variation of the equipment, or to cover all the possible contingencies which may arise during operation or maintenance. We welcome your comments concerning this Manual. Although every effort has been made to keep it free of errors, some may occur. When reporting a specific problem, please describe it briefly and include the Operator's Manual article number, paragraph or figure number, and the page number.

Send your comments to Publications Department
Walter Dittel GmbH
Erpftinger Strasse 36
D-86899 Landsberg am Lech
Germany

or via e-mail to: guggenmos@dittel.com

Subject to technical changes Printed in Germany 03.05.01

TABLE OF CONTENT

Page

Warranty - Copyright - Service Information 2

Table of Content 3

List of Illustrations 5

Abbreviations and Acronyms 6

Section 1, Safety Information 7
1.1 Used Symbols 8

Section 2, General Description 9
2.1 Introduction 9
2.2 Models of the **FSG 90 System** 9
2.3 Application 9
2.4 Brief Description 10
2.5 System and Type Approval Information 12
2.6 Operating License 13
2.7 Equipment supplied 13
2.8 Optional Accessories 14
2.9 Equipment required but not supplied 15
2.10 Microphone hints 15

Section 3, Installation 17
3.1 General 17
3.2 Unpacking and Inspecting Equipment 17
3.3 Pre-installation Test 17
3.3.1 Particular Remarks to **FSG 90(X)** transmitter modulation 18
3.4 Mechanical Installation 20
3.4.1 Transceiver installation 20
3.4.2 Compass deviation 20
3.4.3 Antenna installation 22
3.5 Airborne wiring 23
3.5.1 General recommendations 23
3.5.2 Microphone Connection 27
3.5.3 Intercom (IC) 27
3.5.4 Loudspeaker / Headset interconnection 28
3.5.5 AF External Operation 28
3.5.6 Lighting the Frequency Display 28
3.5.7 Connection to a 28 Vdc airborne system 29
3.6 Post-installation Check 29
3.6.1 Testing on the Ground with Engine Off 29
3.6.2 Ground checks with engine running 29

TABLE OF CONTENT

Page

Section 4, Functional Description 31
4.1 Introduction 31
4.2 Operator's Controls 31
4.3 Frequency Display..... 34
4.4 Connectors at rear side 35

Section 5, Set-Up Procedure 37
5.1 Calling SET-UP without password..... 38
5.2 Calling SET-UP with password..... 38
5.3 Interrupt the SET-UP procedure..... 39
5.4 SET-UP procedure 39
5.4.1 Adjusting the automatic squelch threshold 39
5.4.2 Adjusting the microphone sensitivity (Dynamic or amplified/carbon microphones) 39
5.4.3 Adjusting the Intercom volume..... 40
5.4.4 Adjusting the Sidetone volume..... 41
5.4.5 Adjusting the headset volume 41
5.4.6 Selecting '25 kHz only' or combined 8.33/25 kHz channel spacing 42
5.4.7 Deleting occupied channel memories 42
5.4.8 Selecting AF EXTERNAL (ON/OFF)..... 43
5.4.9 Selecting 'CHANNEL MODE ONLY' or 'FREE FREQUENCY SELECTION' 43
5.4.10 Selecting 'TRANSMITTER BLOCKING' during receive (ON/OFF) 43
5.4.11 Service (ON/OFF)..... 44
5.4.12 Optional module (ON/OFF)..... 44
5.4.13 Entering a password 44
5.4.14 Reset 45

Section 6, Operating Instruction 47
6.1 Introduction 47
6.2 Turning ON - Selecting Frequency/Channel Name - Volume..... 47
6.3 Receive (Listen) Operation..... 48
6.4 Transmit (Talk) Operation 49
6.5 Storing a new Frequency/Channel Name..... 50
6.6 Recall of stored Frequency/Channel Name 50
6.7 Squelch (SQ) Operation 50
6.8 Intercom 51
6.9 AF External..... 51

TABLE OF CONTENT

Page

6.10 Lighting....51
6.11 Turning OFF....51
6.12 Checking the A/C onboard supply....52
6.13 Operating times of a **FSG 90** (6-Watt version) supplied from a 12 V battery only....53
6.14 Emergency Operation....53

Appendix A, Technical Summary....55
A1 General....55
A2 Dimensions, Weight, Fuses....56
A3 Approvals....56
A4 Receiver Characteristics....57
A5 Transmitter Characteristics....59

Appendix B, Environmental Performance Classification....61

Appendix C, ICAO Frequency-Channel pairing plan for combined 8.33 kHz /25 kHz Operation....63

Appendix D, Certificates....65

LIST OF ILLUSTRATIONS

Fig. Page

3-1 Test Setup....19
3-2 Deviation of a compass by an operating **FSG 90(X)**, dependent on the distance between compass center and contour of transceiver....20
3-3 **FSG 90(X)**, Dimensions, Installation Drawing....21
3-4 Hook-up Diagram using wire harness F10189, 1-2 dynamic microphone(s)....24
3-5 Hook-up Diagram using wire harness F10190, 1-2 dynamic microphone(s) and Intercom....25
3-6 Hook-up Diagram, 2 amplified/carbon microphones and Intercom....26
4-1 Operator's Controls and Indicators....31

ABBREVIATIONS AND ACRONYMS

A/C	Aircraft
A/N	Article Number (Walter Dittel)
AGC	Automatic Gain Control
Ah	Ampere hour
AM	Amplitude Modulation
ANT	Antenna
Ass'y	Assembly
AWG	American Wire Gauge
ccw	Counterclockwise (turn left ↺)
CH	Channel
CTS	Ready-to-Transmit
cw	Clockwise (turn right ↻)
dB	Decibel
dia.	Diameter
EMF	Electromotive Force (voltage of an open circuit)
F/CH	Frequency/Channel
FL	Flight Level
g	Acceleration due to gravity
GND	Ground
HI	High Power
Hz	Hertz
ICAO	International Civil Aviation Organization
IF	Intermediate Frequency
kHz	Kilohertz
LCD	Liquid Crystal Display
LED	Light Emitting Diode
LO	Low Power
LOS	Line-Of-Sight
m	Modulation
mA	Milliamperes
MD	Mode
MHz	Megahertz
MIC	Microphone
mW	Milliwatt
NM	Nautical miles
nW	Nanowatt (10^{-9})
PEP	Peak Envelope Power
PLL	Phase-Locked Loop
ppm	parts per million
PTT	Push-To-Talk
pW	Picowatt (10^{-12})
PWR	Power
RF	Radio Frequency
rms	Effective value (root mean square)
RTS	Invitation to send
RX	Receive
RxD	Receive data
S+N/N	Signal-to-Noise Ratio
SINAD	Ratio: $\frac{\text{Signal} + \text{noise} + \text{distortion}}{\text{noise} + \text{distortion}}$
SPKR	Loudspeaker
SQ	Squelch
STBY	Standby
STO	Store
SWR	Standing-Wave Ratio
TOT	Time out timer
TX	Transmit
TxD	Transmit data
VCO	Voltage-Controlled Oscillator
Vdc	Volts, direct current
VHF	Very-High Frequency
VOL	Volume
VSWR	Voltage Standing-Wave Ratio
W	Watt
Ω	Ohm
°C	Degrees Centigrade
°F	Degrees Fahrenheit

SECTION 1 SAFETY INFORMATION

Every radio, when transmitting, radiates energy into the atmosphere that may, under certain conditions, cause the generation of sparks. All users of our radios should be aware of the following warning:

Do not operate this radio in an explosive atmosphere (petroleum fuels, solvents, dust, etc.)!

During normal use, the radio will subject you to radio frequency energy substantially below the level where any kind of harm is reported.

TO ENSURE PERSONAL SAFETY, please observe the following simple rules**:**

- **DO NOT** transmit when the antenna is very close to, or touching, exposed parts of the body, especially the face and eyes.
- **DO NOT** transmit on a busy channel.
- **DO NOT** press the transmit (PTT) key when not actually desiring to transmit.
- **DO NOT** transmit in closed aircraft or vehicles with the antenna inside the cabin. This may cause malfunction of the avionics or trigger the airbag! Always operate the radio **FSG 90(X)** with a suitable outside / external antenna! Assure appropriate lightning protection where elevated outdoor antennas are used.
- **DO NOT** operate the radio whilst driving. It should also be noticed that the use of a hand held microphone while driving could constitute an offence under the Road Traffic Regulations in certain countries.
- **DO NOT** allow children to play with any radio equipment containing a transmitter.
- **DO NOT** call radio's SET-UP in flight or whilst driving a vehicle. Transmit and receive are partially disabled!
- After each SET-UP check all settings of the radio and cockpit instruments for correct function before the next flight or application!
- Always switch OFF the radio first when installing the unit into vehicles, aircraft or carrier cases or when removing from it!
- Always switch OFF the radio first when starting an engine or vehicle!
- When operating the **FSG 90(X)** on a 24/28 Vdc source a suitable Voltage Converter 24 Vdc/12 Vdc of at least 5 Amps must be used!
- The **FSG 90(X)** may be used exclusively for communication on the airband frequencies.
- Unauthorized modifications and changes of the system **are forbidden**.
- When replacing defective parts use only original spare parts or standard parts recommended by the manufacturer!
- In aircraft or vehicles a suitable noise cancelling microphone or headset for aircraft radios shall be used.
- A backup microphone should always be carried during any flight. Even new microphones can fail.
- Volume is very important. Increasing speaking levels while the lips are facing the microphone, but not straining or pushing to yelling levels will increase clarity.

- Prior to any flight verify proper **FSG 90(X)** functions by means of a short communications test. It has to be taken into account that with a faulty antenna or cable this COM test may absolutely turn out positive at the airfield or in short distance to the ground station. But at a distance of 2 to 6 miles faulty antenna and/or cables will cause communication breakdown!
- Push-to-Talk keys may stick occasionally. Therefore, observe while transmitting the transmit (TX) symbol at the **FSG 90(X)** display. This TX symbol must disappear when releasing the PTT key. After 2 minutes continuous TX the built-in transmit time out timer disables the transmitter in order to avoid continuous channel blocking. Then, the whole display warns by continuous flashing. Refer to appropriate hints in this manual.
- Replace blown fuse only against correct type with specified nominal value. Investigate the cause.

1.1 Used Symbols

In this manual the following symbols are used:

DANGER!
describes an immediate threatening danger! Failing to observe the note may cause death or severe injury!

CAUTION!
describes a special note for operation. Failing to observe the note may cause damage of the transceiver and/or stored data may be deleted (SET-UP or user programmed memory)!

IMPORTANT!
describes explanations and other useful hints. Failing to observe the note may cause a degraded performance and/or an unsatisfactory operation!

SECTION 2 GENERAL DESCRIPTION

2.1 Introduction

This installation and operating manual IM 031.00 contains instructions and descriptions for application, installation, presetting operation and testing, as well as interconnecting diagrams of the multi-use **FSG 90 VHF/AM Transceiver System** of Walter Dittel GmbH, Luftfahrtgeraetebau, D-86899 Landsberg, Germany.

The Maintenance Manual MRM 031.00 contains detailed circuit description, repair instructions, alignment procedures, testing instructions, and an illustrated parts list.

2.2 Models of the FSG 90 System

This manual refers to 2 out of 8 models available up to now.

A/N F10185, VHF/AM Dual Mode Airband Transceiver FSG 90

Frequency range: 118.000 to 136.975 MHz, channel spacing 8.33 kHz/25 kHz, results in 2,278 channels, or 118.000 to 136.975 MHz, channel spacing 25 kHz, results in 760 channels. 99 channel memories for combined 8.33/25 kHz mode, additional 99 memory channels for '25 kHz only' mode, **6W RF carrier output power**, 10 - 16.5 Vdc supply. The radio will fit a standard 58 mm dia. / 2¼" dia. instrument panel.

IDENT.: MODEL 90-25/8.33 (ED-23B CLASS C / CLASS E RECEIVER, CLASS 4 / CLASS 6 TRANSMITTER).

A/N F10302, VHF/AM Dual Mode Airband Transceiver FSG 90-H1

Frequency range: 118.000 to 136.975 MHz, channel spacing 8.33 kHz/25 kHz, results in 2,278 channels, or 118.000 to 136.975 MHz, channel spacing 25 kHz, results in 760 channels. 99 channel memories for combined 8.33/25 kHz mode, additional 99 memory channels for '25 kHz only' mode, **10W RF carrier output power**, 10 - 16.5 Vdc supply. The radio will fit a standard 58 mm dia. / 2¼" dia. instrument panel.

IDENT.: MODEL 90-25/8.33-H1 (ED-23B CLASS C / CLASS E RECEIVER, CLASS 4 / CLASS 6 TRANSMITTER).

2.3 Application

The equipment is well suited for operation in powered aircraft and helicopter with reciprocating turboprop and turbojet engine.

Ultra low power consumption in conjunction with extremely wide DC supply voltage range, small dimensions and wide scope of accessories allow universal airborne applications in any powered aircraft, motor glider and Ultralight, and in glider and balloon, for primary or (also battery supplied) backup operation.

Universal use also in ground vehicle, as well as for compact portable cases and for desk-top or rack mounted, local or remote controlled, fixed base primary, or (also battery supplied) backup operations, are further applications. Please always ensure suitable antenna solutions!

Retrofit installation is achieved against former Walter Dittel slide-in VHF COM transceivers **FSG 40S**, **FSG 50**, **FSG 60M**, and panel mounted **FSG 70**, **FSG 71M** using adapters.

2.4 Brief Description

All six radios out of the **FSG 90 System** are miniaturized, lightweight, panel mounted single block VHF/AM transceivers operating in the airband frequency range 118.000 MHz ... 136.975 MHz, thus providing either 2,278 channels with 8.33 kHz/25 kHz channel spacing, plus 760 channels with '25 kHz only' channel spacing, covering a standard communications distance of 100 NM (nautical miles) at FL 70.
Case dimensions of all models will fit into a standard 2¼ in. / 58 mm diameter opening of the instrument panel or console (behind panel installation), using 4 screws. Depth including wiring is 230 mm.
All control and display elements are located on the front panel. Connections to the electrical environment are made through a 25-pole SUB-D connector and a BNC female connector at the rear panel of the units.
The ICAO channel name (8.33 kHz/25 kHz spacing) and operating frequency (25 kHz spacing), supply indicator, transmit indicator, channel memory number and SET-UP information are all indicated at a two-line Liquid Crystal Display (LCD, can be back-lit).
Three display modes are user selectable:

- **Use/STBY Mode:** Active channel name or frequency, selectable standby channel name / frequency
- **Channel Mode:** Active channel name or frequency, associated preset channel memory number (1 … 99)
- **Direct Tune Mode:** Active channel name or frequency only.

With the Dual Mode model **FSG 90** up to 99 channel memories in 8.33 kHz / 25 kHz CH spacing (6-digit display), and another set of up to 99 channels in the '25 kHz only' CH spacing (5-digit display) can be preset. After change to the other operating mode (from 8.33/25 kHz to 25 kHz only, or from 25 kHz to 8.33/25 kHz), each stored set of up to 99 channel memories remains available.
Preset channel memories remain available also after manual or automatic power-off.
The non-volatile channel memories of all **FSG 90** can easily reprogrammed also during flight or ground operation.
Programming can be done in the actual mode. Deleting channel memories is possible in each mode (only during SET-UP mode).
For ground applications, limitation to use preset channel(s) only can be determined in (password protected) SET-UP.
Channel name / frequency, or preset channel memories are selected with the dual function **F/CH** switch.
Both Transmit and Receive use the same digital frequency synthesizer and one temperature calibrated reference crystal (accuracy 1 ppm in the temperature range from 0°C to +40°C/32°F to 104°F).
The dual superhet receiver offers very high immunity against in-band and out-of-band interference and intermodulation (Annex 10 FM immunity).
The automatic AM/FM Squelch (threshold adjustable in 4 levels, SET-UP) and the normally active transmitter blocking during Receive are disabled by pushing the **SQ** button, and enabled when the **SQ** button is pushed again.
An audio low pass filter for areas using Climax operation in 25 kHz spacing is incorporated.
Separate Audio amplifiers power the speaker (4 Watts / 4 Ohms or 8 Watts / 2 Ohms), and the headphones (100 mW / 600 Ohms).
The solid state transmitter is wideband tuned from 118 to 137 MHz and delivers at least an RF carrier power of 6-Watts or 10-Watts for the **FSG 90-H1** model.
Transmit frequency / channel name is tuned simultaneously with Receive frequency / channel name (Simplex operation).

A keyed transmitter is indicated by a transmit symbol at the LC display.
Two independent microphone inputs (separate pins) allow universal accessory operation:

- For powered aircraft use Standard Carbon, amplified Dynamic or Electret microphones,
- For gliders, portable, vehicle mobile, and fixed base operation use non-amplified Dynamic microphones.

The microphone inputs may also be continuously activated. This allows in Receive continuous intercommunication (no additional accessories needed) between pilot and crew (intercom wiring harness), using headsets.
A separate AF input allows interconnection of external audio source(s) especially in aircraft using other COM, VOR/LOC, DME, MKR and/or electric variometers. This allows signal monitoring during Receive by speaker and/or headphone.
30 mA current consumption saving can be achieved in standby mode (Squelch ON), when the **FSG 90(X)** is used e.g. in portable cases or installations, where no external audio is required for speaker output. Listening through headphone remains however possible. This external AF OFF function may be selected in SET-UP. This reduces the standby current consumption to only 80 mA and will extend battery supplied operating time significantly.
The transceiver can be supplied either directly from an 12 - 14 Vdc A/C bus, or through a suitable DC regulator from 28 Vdc-buses.
In aircraft (or portable cases) without onboard electric power generation system (UL, Glider etc.), operation from a 12 Vdc battery (min. 6 Ah) is suitable.
The DC supply voltage is monitored automatically. When supply drops below 11 Vdc, the Supply Indicator at the LC display starts blinking as a low supply warning.
Below 8.5 to 9.5 Vdc, the **FSG 90(X)** turns OFF itself automatically, and will resume operation with supply above 9.5 to 10 Vdc. The last used settings remain active.
A voice processor is incorporated to achieve identical acoustic voice quality during Transmit and Receive, as well as Audio Leveling in Receive, and in addition prevents overmodulation. Usual testing employs sinusoidal tone signals only; this feature especially considers the specific characteristic of the voice. It ensures also VERY HIGH AVERAGE DEPTH OF MODULATION of some 80% AM, causing transmission signals sounding normal and very strong.
The radios are equipped with a time out timer. This avoids blocked channel after 2 minutes continuous TX (stuck button does no longer block a channel continuously) and is indicated by a continuously blinking display. Should the malfunction continue the **FSG 90(X)** is ready for another 2 minutes transmission period when turning OFF and ON again (e.g. for emergency transmissions).
The transmitter blocking feature avoids transmission on a busy channel. Transmitter blocking is usually active, but may be disabled permanently in SET-UP or manually by pushing the **SQ** button.

2.5 System and Type Approval Information

The Dual Mode VHF/AM Airband Transceivers **FSG 90** and **FSG 90-H1** comply for both, the combined 8.33 kHz/25 kHz as well as "25 kHz only" channel spacing, with all applicable National and International Type Approval requirements, for any airborne and ground operations.

- JTSO Authorization LBA.O.10.911/98 JTSO 1 (LBA Luftfahrt-Bundesamt) based on *EUROCAE ED-23B Airborne requirement is met besides 8.33 kHz requirements also for the 25 kHz ONLY channel spacing.
  This also includes Immunity according to ICAO ANNEX 10 against FM Broadcast Interference.
  This also includes fulfillment of specific audio filtering required in areas with CLIMAX operation in 25 kHz channel spacing.
  * Associated EUROCAE ED-14C / RTCA DO-160C Environmental requirements.
  * Associated EUROCAE ED-12B Software requirements based on ED-23B.
- RegTP No. A132937J, stringent German Type Approval requirements RegTP 321 ZV 034 (airborne) and RegTP 321 ZV 039 (ground).
- DFS (Deutsche Flugsicherung) No. B-7850/97 (ground) German Type Approval requirements.
- BZT No. B132705J, CE Conformity,
  * Associated with DIN/ISO 7637-1 DC supply in 12 Vdc vehicle.

IMPORTANT!

- ***For the first time after one year, then every 2nd year, <u>ground applications</u> using 8.33 kHz channel spacing require checking of the high precision reference frequency (tolerance less than ± 1.5 ppm) and recalibration, if necessary!***
- ***Every 4th year, <u>airborne applications</u> using 8.33 kHz channel spacing require checking of the high precision reference frequency (tolerance less than ± 5 ppm) and recalibration, if necessary!***
- ***All applications in the 25 kHz channel spacing require no recalibration (frequency accuracy tolerance less than ± 20 ppm).***
- ***All tolerances include the full operating temperature range of -20°C ... +55°C / -4°F ... +131°F.***
- ***Checking and recalibration must be performed by the equipment manufacturer or through authorized and approved avionics services. This requires use of specified test equipment as well as applicable test procedures (software) released by the manufacturer.***

2.6 Operating License

IMPORTANT!

- ***Depending on national regulations, VHF/AM airborne and VHF/AM ground operation may require an individual national operating license. Such license is usually granted by the responsible National Telecommunications Authority, using suitable application forms.***
- ***Besides aircraft registration, operator's name, address and operating license payment details, state radio type, Serial number, JTSO number LBA.O.10.911/98 JTSO, and RegTP number A132937J.***

2.7 Equipment supplied

Description	Article number
Dual Mode 6-Watt VHF/AM Transceiver FSG 90, Installation and Operation manual, Operating instructions, 4 screws M 4 x 12, Warranty card to cover 24 months	F10185
Dual Mode 10-Watt VHF/AM Transceiver FSG 90-H1, Installation and Operation manual, Operating instructions, 4 screws M 4 x 12, Warranty card to cover 24 months	F10302

2.8 Optional Accessories

Wide accessory scope allows **FSG 90(X)** installation and operation into aircraft, in ground systems; fixed, portable and mobile into vehicles.

Slide-in replacement adapters allow easy **FSG 90(X)** retrofit against former transceivers FSG 18, 40A, 40S, 50, 60M, using existing installations.

Description	Article no
Retrofit adapter – to replace **FSG 70/71M**	F10218
Retrofit adapter – to fit into mounting tray of **FSG 50/60M/40S/18**	F10315
Retrofit adapter – to replace mounting tray of **FSG 50/60M/40S/18**, fixing holes left and right	F10317
Connector kit, SUB-D 25-pin, incl. mounting hardware	F10212
Folded-top antenna, for gliders, antistatic, 118-137 MHz, 9 m/29.5 ft cable RG-58C/U, BNC connector. Applies for wood or GRP tail-fin, not metal or carbon fiber tail-fin!	F10057
Rod antenna, swivel type, 5 m/16.5 ft cable, w/out RF plug	W00066
BNC antenna connector, solder type	E08980
Wiring harness, 2.9 m/9.5 ft, complete with all connectors	F10189
Intercom wiring harness, 2.9 m/9.5 ft, complete with IC switch	F10190
Aircraft loudspeaker 4 Ω / 30 Watt, small, robust case, two 5-pole sockets to connect 2 microphones or headsets, terminal for PTT key, fits harness F10189 or F10190,	F10061
Dynamic headset, noisecancelling, coiled cord, 4-pole plug U-174/U	W00048
Adapter cable for headset W00048, to fit F10061 A/C speaker	F10036
Dynamic goose neck microphone 600 Ω, 3 m/9.8 ft cable, 5-pole connector, specially for gliders and motor gliders	F10039
Dynamic microphone, for PC portable, and for car mobile use, coiled cord, PTT key, 5-pole plug	F10041
Retaining bracket, fits microphone F10041	E24907
Dynamic fist microphone, 500 Ω, coiled cord, PTT key, 5-pole plug	F10346
Microphone bracket, to keep microphone F10346	W00087
Dynamic microphone-loudspeaker, coiled cord, PTT key, 5-pole plug, sealed	F10042
PTT key, 3.5 m/11.5 ft cable, permanent installation on the yoke	F10050
Inline PTT key U-94A/U, coiled cord, 5-pole plug, mates A/C speaker F10061 or Portable Cases 70 PC / 70 PS and headset A/N W00048, clip allows attaching to clothing	F10125
Power supply, 12 Vdc/6.5 Ah lead calcium battery, complete with rugged steel/aluminum case, circuit breaker, 5-LED test set, 2-pole socket, mounting bracket	F10023
Automatic battery charger DL-50, 115/230 Vac. Output 13.8 Vdc / 600 mA. For all airborne and portable 12 V lead batteries	F10130
Car mounting bracket	F10058

2.9 Equipment required, but not supplied

a) VHF aircraft antenna with coax cable RG-58C/U and BNC connector (Male)
b) Headphone (8 ... 600 Ohms, typical) and/or loudspeaker (2 ... 16 Ohms)
c) Non-amplified dynamic microphone, (4 ... 600 Ohm),
or amplified/carbon microphone (amplified dynamic or Electret mike), with or without PTT key (separate mike inputs amplified/non-amplified)
d) Alternatively to b) and c) headsets with similar specifications
e) Battery power supply unit 12 Vdc, minimum 6 Ah, for aircraft without electrical system
f) Push-to-talk key permanently installed on yoke (if microphone w/out PTT key is used)
g) 25 pole SUB-D connector type DA-25 S and cover, if no pre-manufactured wiring harness exists.

2.10 Microphone hints

IMPORTANT

a) Radio system reliability and performance significantly depends on quality acoustic accessories.

b) Extremely high performance requirements - especially for 8.33 kHz Technology - demand after installation completion proper acoustics leveling through SET-UP in order to maintain best radio capability. Therefore, please do not use low performance acoustics accessories.

c) Dynamic microphone requires shielded wiring. Essential requirement is consequent separation of microphone ground / shield from any other ground. This means, dynamic mike ground / shield must be separated from any other grounds for DC input and DC output, AF input and AF output like speaker, phone, PTT and external AF input. Other grounds for DC input and output, speaker, phone, PTT and external AF may be connected together with the amplified mike ground.

d) Amplified microphones may contain dynamic or Electret acoustics transducers.

e) Always ensure IDENTICAL microphones are used for parallel operation. Similar requirements are applicable for headphone characteristics.

f) Always ensure that during SET-UP all of the many **FSG 90(X)** *functions are adjusted to achieve optimized radio system performance.*

g) Operation of amplified microphone systems close to the radiating antenna (portable case or located right behind of the cockpit) may be influenced from strong antenna RF field strength and become unstable, oscillates or causes modulation distortion. Verify this effects -possible caused by- by RF replacing the radiating antenna against artificial antenna / RF dummy load temporarily

THIS PAGE
INTENTIONALLY
LEFT BLANK

SECTION 3 INSTALLATION

3.1 General

This section contains instructions and suggestions to be considered before installing the radio **FSG 90(X)** into an aircraft. Close adherence to these suggestions will assure more satisfactory performance from the equipment.

Information in this section are intended for certified avionics shops only. Work such as installation, wiring and testing should only be carried out by a qualified technician!

IMPORTANT!

- *If installation into an aircraft is made by other than a certified avionics shop, you have to consult your responsible aircraft Avionics inspector - before the installation – to get authorized certification of your completed installation.*
- *The conditions and tests required for **FAA-TSO** approval of this article are minimum performance standards. It is the responsibility of those desiring to install this article either on or within a specific type or class of aircraft to determine that the aircraft installation conditions are within the **FAA-TSO** standards. If not within the **FAA-TSO** standards, the article may be installed only if further evaluation by the applicant documents an acceptable installation and is approved by the Administrator.*

3.2 Unpacking and Inspecting Equipment

Unpack the equipment carefully and inspect each item for evidence of damage incurred during shipment. **FSG 90** model number and serial number must comply with relevant details mentioned in Airworthiness Approval Tag and delivery note details attached to the shipment.

If a damage claim must be filed, save the shipping container and all packing materials to substantiate your claim. The claim should be filed with the transportation company as soon as possible.

If a damage is noted after the first test, notify the transportation company in writing with advance phone or fax advice about hidden transport damage.

A copy of such a claim including all information from the type label is to be forwarded without delay also to Walter Dittel GmbH.

3.3 Pre-installation Test

Before installing the radio into an aircraft, vehicle or portable carrying case, a short but comprehensive functional test by a certified avionics shop is recommended.

a) Interconnect the radio with a test wiring harness (according to figure 3-1) to the test bench setup. For **FSG 90** set supply to 13.8 Vdc at radio input terminals. For **FSG 90-H1** set supply to 14.0 Vdc at radio input terminals. Turn ON the radio with the **ON/OFF-VOL** switch on front panel. Switch OFF the Squelch (push **SQ** button).

b) In receive mode set the VOL control to mid position. On all channels within 118 ... 136.975 MHz, almost identical, strong, continuous acoustic noise must be audible.

c) Receiver sensitivity on all channels must comply with technical data (make sensitivity tests to cover the whole frequency range).

d) Switch ON the Squelch (push **SQ** button again). The squelch threshold (depending on SET-UP presetting) shall be within 0.5 µV and 5 µV / 50 Ohms (vary signal generator output level).

e) Connect a 50 Ohm Wattmeter and a 20 or 30 dB throughline RF attenuator pad. Key the transmitter and check RF output level (more than 6W carrier or more than 10W carrier for **FSG 90-H1** model).

f) Adjust audio generator to 1,000 Hz (via attenuator for dynamic microphone or directly via decoupling capacitor) connected to
Amplified/Carbon Microphone Input
With 100 mV rms input, the transmitter shall achieve more than 70% AM. Increase AF input to 1.0 V rms, observe modulation envelope, no overmodulation shall occur; depth of modulation must remain less than 95% AM.

Dynamic Microphone Input
With some 1 mV rms input, the transmitter shall achieve more than 70% AM (depending on SET-UP presetting). Increase AF input to 10 mV rms and observe modulation envelope. No overmodulation shall occur; depth of modulation must remain less than 95% AM.

3.3.1 Particular Remarks to FSG 90(X) transmitter modulation

For the combined 8.33 kHz and 25 kHz channel spacing airband radio technology, highly demanding, specific requirements shall be comprehensively considered as follows:

1. Voice modulation with its typical dynamic peaks (fast and large level changes) shall modulate the transmitter with peak AM depth of less than 85%.
2. Factory setting of the very specific **FSG 90(X)** voice processor results in a remarkable AVERAGE of approximately 80% AM depth (voice <u>and</u> Sine modulation!). Thus, optimized usage of the RF carrier is achieved.
3. Do not change this setting, otherwise the stringent Transmitter Spectrum Mask is no longer maintained.
4. The Walter Dittel **FSG 90 System** incorporates a special DITTEL VOICE PROCESSOR, which is matched best to meet the requirements of the particular environmental noise level situation.
   a) This ensures a always loud and clear transmitter modulation, under consideration of specific test requirements.
   b) Due to the voice processor voice signal transfer is IDENTICAL in both the 8.33 kHz and in the 25 kHz channel spacing mode.
   c) Even under these very specific conditions, fulfillment of the critical, highly demanding Spectrum Mask is achieved.
5. Although due to the specific voice processor compression of modulation peaks, when tested with maximum sine wave modulation signal, a conventional testing of "standard modulation distortion measurements" is possible. This does however refer only to sine wave testing. It will be therefore higher than the usual 2% ... 10% sinus modulation distortion, but will stay far below the maximum allowed 25% modulation distortion factor with sinus modulation.
6. Therefore, judgement of the effectively occupied total transmitter band width (spectrum mask) is the only true, real measurement method. Such measurements can be made only with specific test setup.
7. For tests of the **FSG 90(X)** modulation capability, a sine modulation signal is useful only below some 70% AM depth, and is on the other hand helpful only in determining of possible overmodulation, but is not applicable to judge "voice distortion" anymore.

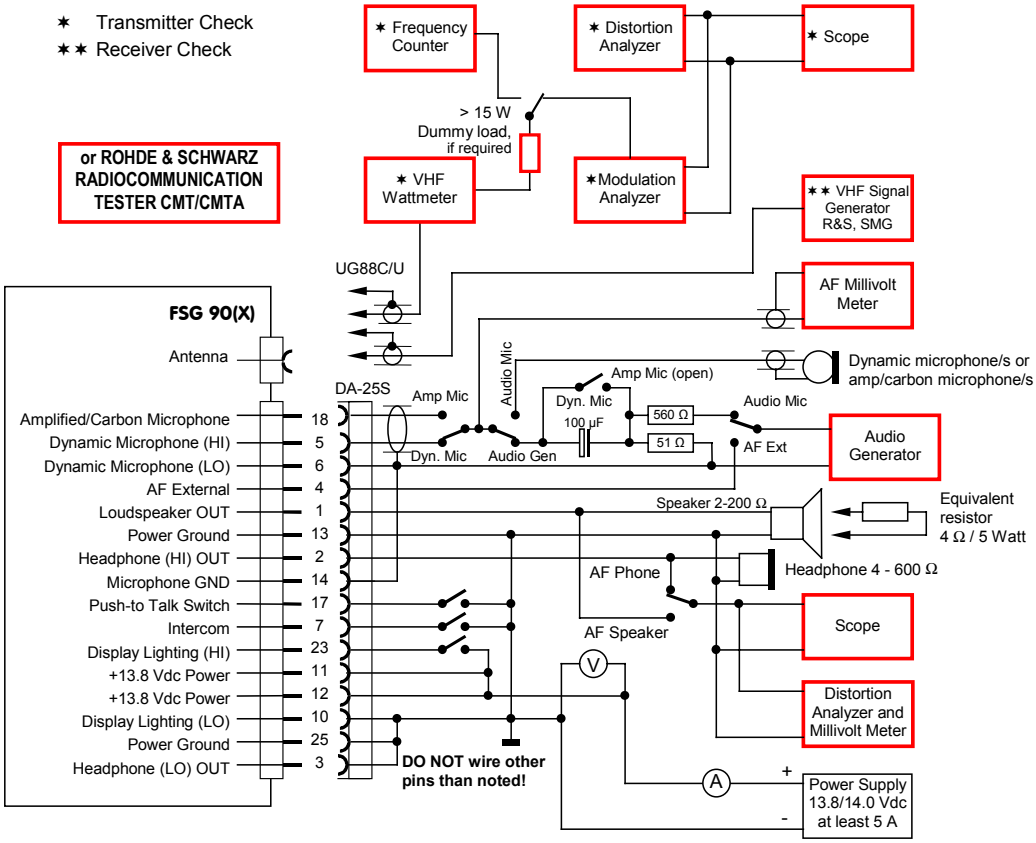

OR

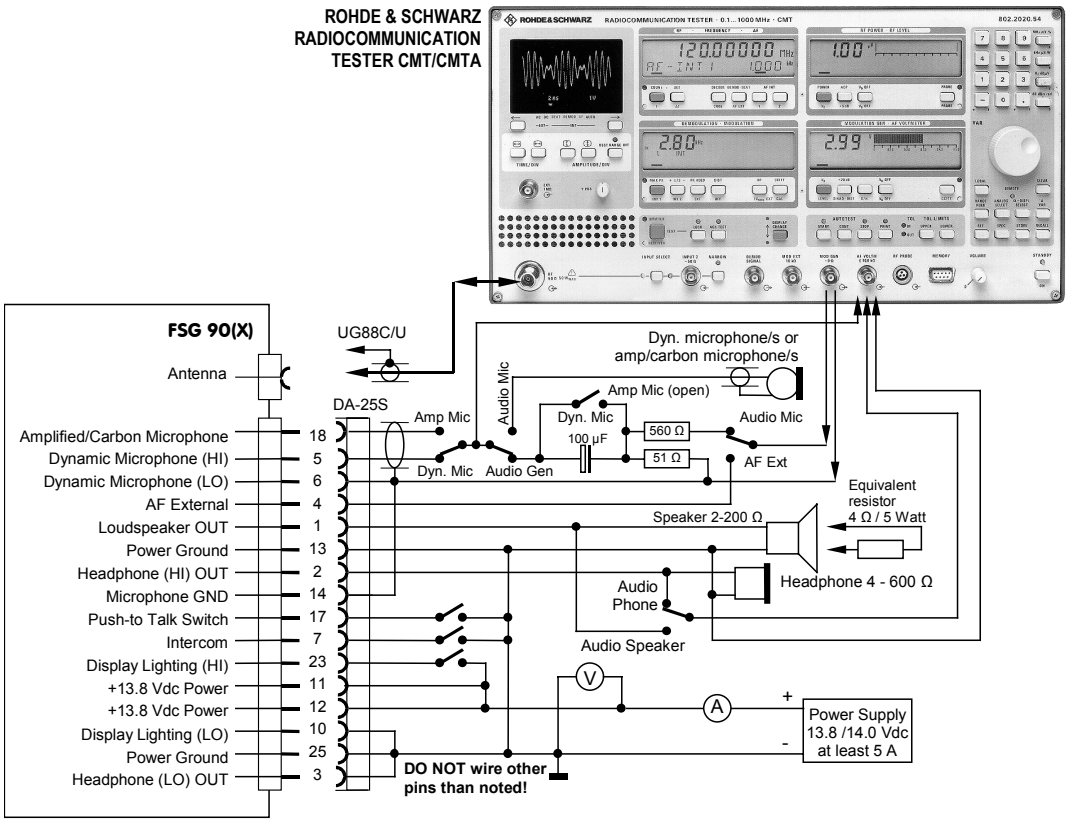

Fig. 3-1: **FSG 90 System**
Test Setup

3.4 Mechanical Installation

3.4.1 Transceiver installation

Any radio installation into an aircraft shall be coordinated with both the licensed inspector who certifies the installation, and with the aircraft manufacturer's installation instructions.

Certifying the aircraft installation may be subject to specific National Regulations.

FSG 90(X) VHF/AM transceivers are designed to be installed into the instrument panel or operating console from its rear side into a standard 2¼ in. / 58 mm diameter panel opening. Dimensions and positioning of the 4 fixing holes refer to Figure 3-3.

Select a radio location distant to heat sources. All equipment controls shall be readily accessible from the pilot's normal seated position. The appropriate operator/crew member(s) shall have an unobstructed view of the display when in the normal seated position.

Sufficient room (at least 230 mm / 9 in.) behind front panel must be left for wiring accommodation. Fixing of the transceiver is achieved by use of 4 cross recessed Pan head screws M 4 x 12 mm (supplied). These screws are sufficient for panel thickness between 2 mm and 5 mm (1/16 in. …3/16 in).

3.4.2 Compass deviation

Compass deviation caused by **FSG 90(X)** is less than 30 cm for 1° deflection.

(Category Z in accordance with EUROCAE ED-14C / RTCA DO-160C environmental test conditions).

Compass Deviation	Distance
0.5°	13 cm/5.1 in.
1.0°	10 cm/3.9 in.
1.5°	9.25 cm/3.7 in.
2.0°	9.0 cm/3.6 in.
2.5°	8.25 cm/3.3 in.
3.0°	7.5 cm/3 in.

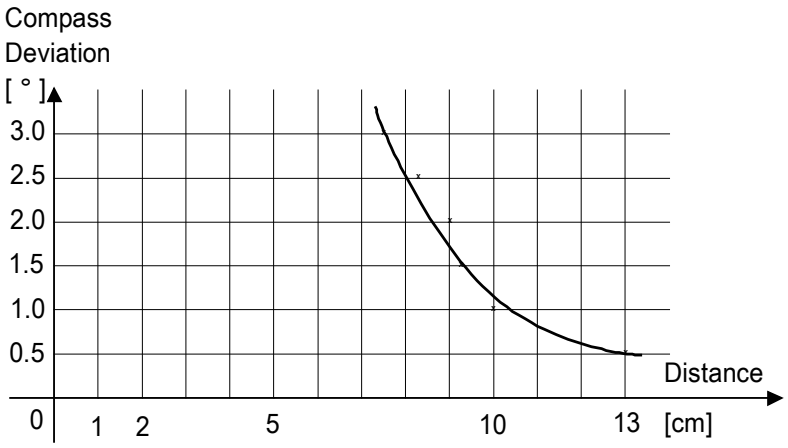

FIG. 3 - 2: DEVIATION OF A COMPASS BY AN OPERATING **FSG 90(X)**, DEPENDS ON THE DISTANCE BETWEEN COMPASS CENTER AND CONTOUR OF TRANSCEIVER

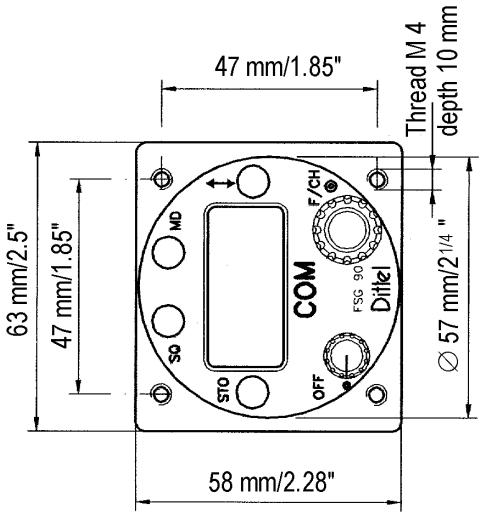

BACK-PANEL MOUNTING

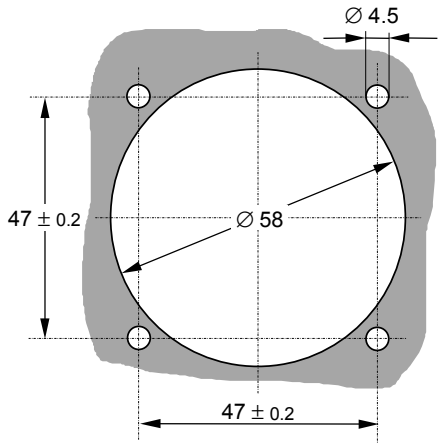

Cutout to be prepared or
Standard 2¼" panel opening

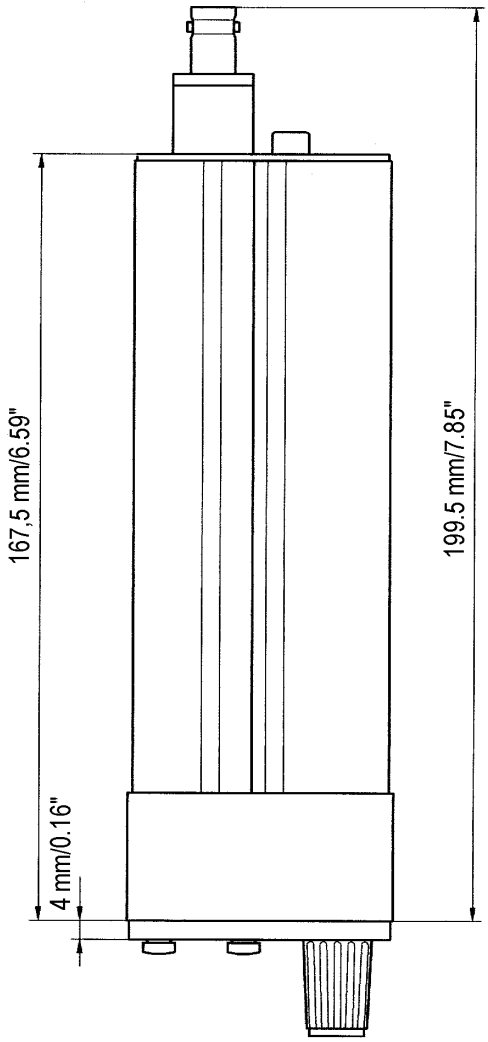

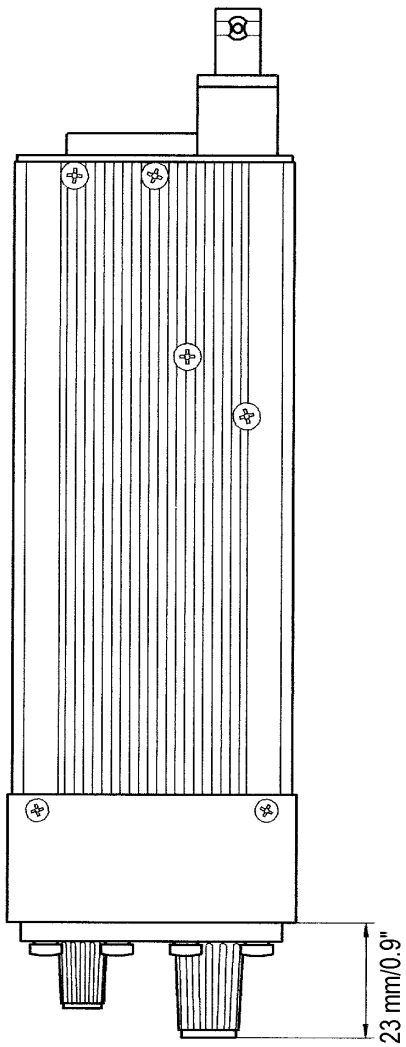

FIG. 3-3: **FSG 90(X)**
DIMENSIONS
INSTALLATION DRAWING

3.4.3 Antenna installation

Your radio FSG 90(X) is only as good as the antenna!

For operation, a vertical polarized 50 Ohm broadband aircraft COM antenna is required. The antenna must be able to radiate RF energy evenly and omnidirectional:

- First of all, look up the aircraft's manual for antenna installation instructions.
- The antenna installation location must be carefully planned. It would be the best to consult the aircraft certifying inspector. In order to achieve best results into all directions, installation instructions must be fully complied with.
- For aircraft with metal fuselage, we recommend our antenna, article No. W00066. The antenna is mounted vertically (as possible) on or under the fuselage. Location should be even away from horizontally screening metal parts like propeller, undercarriage, vertical metal fins etc., for maximum radio range into all (horizontal) directions.
- Distance to other aircraft antennas, like another COM, NAV antenna, should be at least 1.5 m/5 ft. When using two radios **FSG 90(X)**, a distance of 1 m/3.3 ft. between COM antennas is sufficient.
- The antenna mounting area should be as flat as possible.
- The metallic contact between aircraft surface/structure and the antenna cable outer conductor (shield) must be robust. The electrical contact shall remain continuously good safe against vibration.
- For wood and fiberglass (GRP) aircraft, 3 or 4 aluminum counter weight strips (ea. 60 cm/2 ft. long - 5 cm/2 in. wide) are recommended, but shall be placed (mostly) horizontally with a (if possible rectangular) shape as a star or cross.
- These as star or cross placed counter weights must be centrally screwed together with the antenna socket, with continuous, electrically good contact.
- Alternatively, for aircraft with non metallic surface structure inside the fuselage, a metal foil (min. 60 x 60 cm/2 ft. x 2 ft.) can be stuck in. The antenna socket will then be placed in the foil center, together with a metallic ground contact support plate.
- For aircraft with fuselage and/or tail-fin made of non conductive material, our vertical folded top antenna, article no. F10057, is suitable. Installation is made preferably during manufacturing the tail-fin. An installation drawing is available on request. **IMPORTANT: Carbon fiber is conducting and may shield the antenna!**
- Careful sealing of all openings of the outer skin is mandatory. Make sure, that electrical contacts remain continuously good, even under bad environmental conditions.
- Use only high quality 50-Ω coax cable type RG-58C/U. Avoid any sharp cable bend (radius > 50 mm), and any excessive coax cable length.
- Place all wiring including antenna cable distant to other wiring which carries heavy AC currents, and distant to any aircraft controls.
- Any operating kinematics, trimming and all control handles must be absolutely free in all directions.
- Ensure the BNC antenna plug is not shortened between inner and outer connector (Ohmmeter). Resistance 0.0 Ω indicates a short inside antenna connector, while some 0.6 to 1 Ω indicates the antenna cable resistance, while an internally (static) protected antenna is used. A simple rod antenna is tested for low resistive contact between inner cable conductor and radiator, and outer conductor to counter weight.
- Check the antenna matching using 50-Ω SWR meter over the whole frequency range for SWR < 3:1. It may be helpful/necessary to change slightly the length of the middle radiator, or counter weight length for optimized antenna efficiency and matching.
- **REMEMBER: A good antenna is the best RF amplifier!**

3.5 Airborne wiring

Refer to Figures 3-4 to 3-6 of on-board wiring.

3.5.1 General recommendations

- Always ensure continuously good, stable electrical contacts, and efficient RF interference suppression of all electrical systems like generator/alternator, ignition etc., especially consider vibration and corrosion effects. Consult the aircraft installation licensing inspector.
- Do not allow the harness to droop between clamps, especially if it is a heavy harness.
- Do not allow the wires in the harness to come in contact with sharp surfaces or ride against any movable surface.
- Do not install without allowing for service loops, this will help to prevent undue stress on the connectors and allow for easier repair of wire terminations.
- Do not allow harness to route through high heat areas without adequate thermo protection.
- Do not install harnesses in areas that are subject to chemical damage.
- Radio wiring shall be located most distant to other, high AC currents carrying leads. Route all wiring including antenna cable distant from aircraft control and handling components. Place DC power lines at least 15 cm away from compass.
- Use only aviation grade wiring material (LN 9251 resp. LN 9253) in self-extinguishing quality, and with > 500 Volt isolation.
- Prescribed cable diameters must be complied with.
- Ground loops must be avoided.
- Cables are soldered to the DA-25S connector. Solder joints shall be supported by shrinking or rubber sleeves. Cable connector case mounting shall not clamp or damage the wiring.
- The **FSG 90(X)** is protected against reversed polarity only when using a suitable DC supply protection fuse. For 6-Watt models, we suggest a 3.15-Amp. quick acting fuse, or an automatic 3 Amp circuit breaker. For 10-W models (suffix "-H1"), we suggest a 5-Amp quick acting fuse, or an automatic 5 Amp circuit breaker Without proper fuse protection, the radio unit may become severely damaged, warranty validity terminates.
- Power bus circuit breakers are to be mounted in the A/C breaker panel or instrument panel such that they will be accessible in flight and safe from physical damage.
- Before first connection to the **FSG 90(X)** radio is made, carefully cross-check all wiring details, especially DC supply polarity.
- Secure the connected accessory plug by the sliding lock to avoid unwanted connector loosening.
- For ease of installation, prefabricated wiring harnesses for all kind of aircraft are available from **FSG 90(X)** radio manufacturer.
- Electronic variometer seldom comply with airborne type approval requirements. All of the known models at printing time of this manual have to our knowledge a too high radiated RF interference emission. In transmit mode, the operator may even be faced with radio energy based functional variometer influence. Slight improvement may be achieved when the variometer wiring is both shielded and routed not in parallel but distant to the radio wiring. Eventually, short but bulky grounding contacts between all radio and variometer cases may improve this E-variometer RF susceptibility. Further measures to improve RF immunity may be obtained from variometer manufacturer.

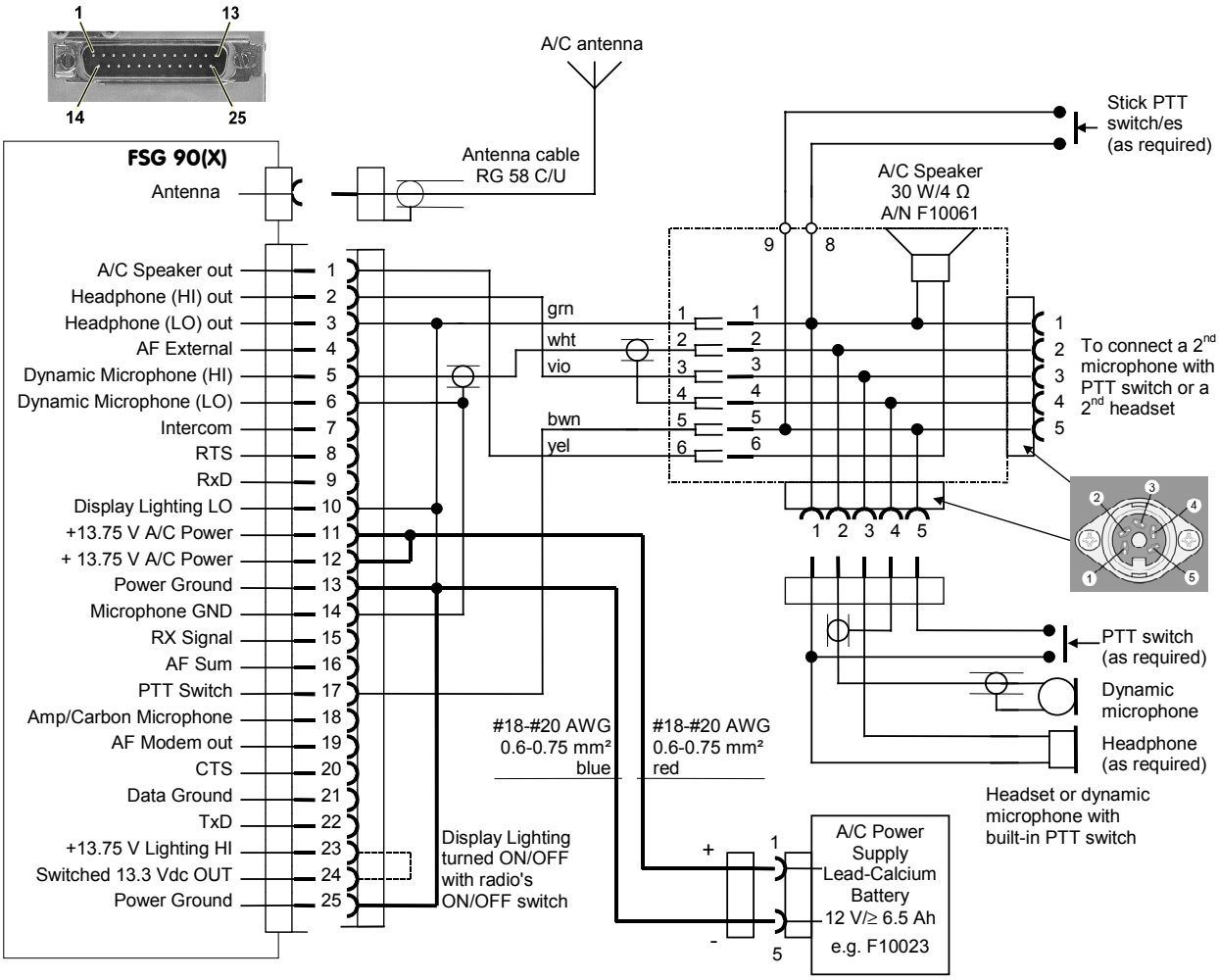

NOTES:

DO NOT wire other pins than noted!

Unless otherwise noted, all wires are #22 AWG (0.3 -0.4 mm²).

Built-in circuit breaker when using **Walter Dittel** Battery A/C Power Supply, A/N F10023.

Length of pre-fabricated wire harness F10189: 2.9 m/ 9.5 ft.

--------- and coax antenna cable are <u>not</u> included in wire harness F10189!

FIG. 3-4: **FSG 90 System**
HOOK-UP DIAGRAM USING WIRE HARNESS F10189
1 - 2 DYNAMIC MICROPHONES

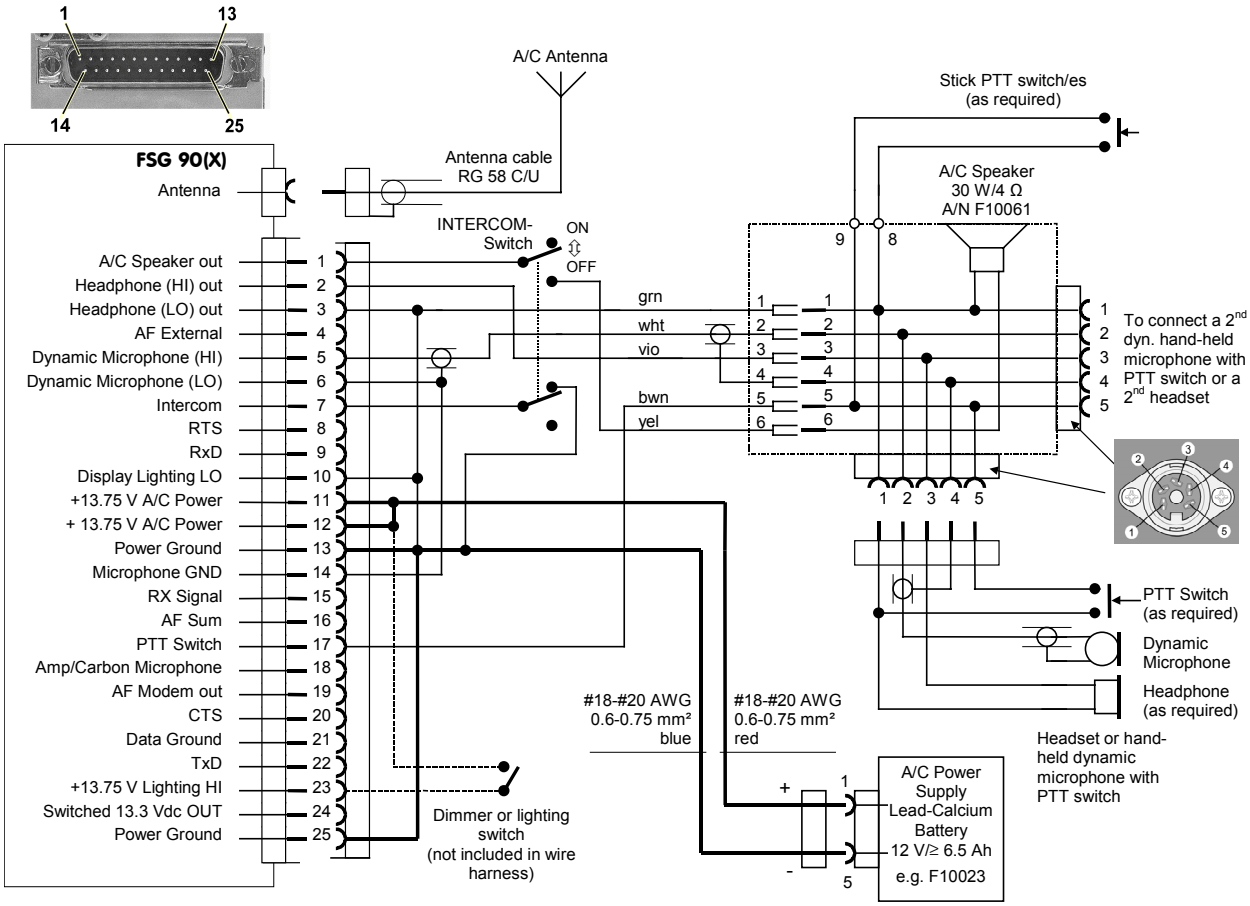

NOTES:

DO NOT wire other pins than noted!

Unless otherwise noted, all wires are #22 AWG (0.3 -0.4 mm²).

Intercom operation requires a microphone which provides audio OUT with the PTT key de-energized (not keyed).

Built-in circuit breaker when using **Walter Dittel** Battery A/C Power Supply, A/N F10023.

Length of pre-fabricated wire harness F10190: 2.9 m/ 9.5 ft.

--------- and coax antenna cable are <u>not</u> included in wire harness F10190!

FIG. 3-5: **FSG 90 System**
HOOK-UP DIAGRAM USING WIRE HARNESS F10190
1 - 2 DYNAMIC MICROPHONES AND INTERCOM

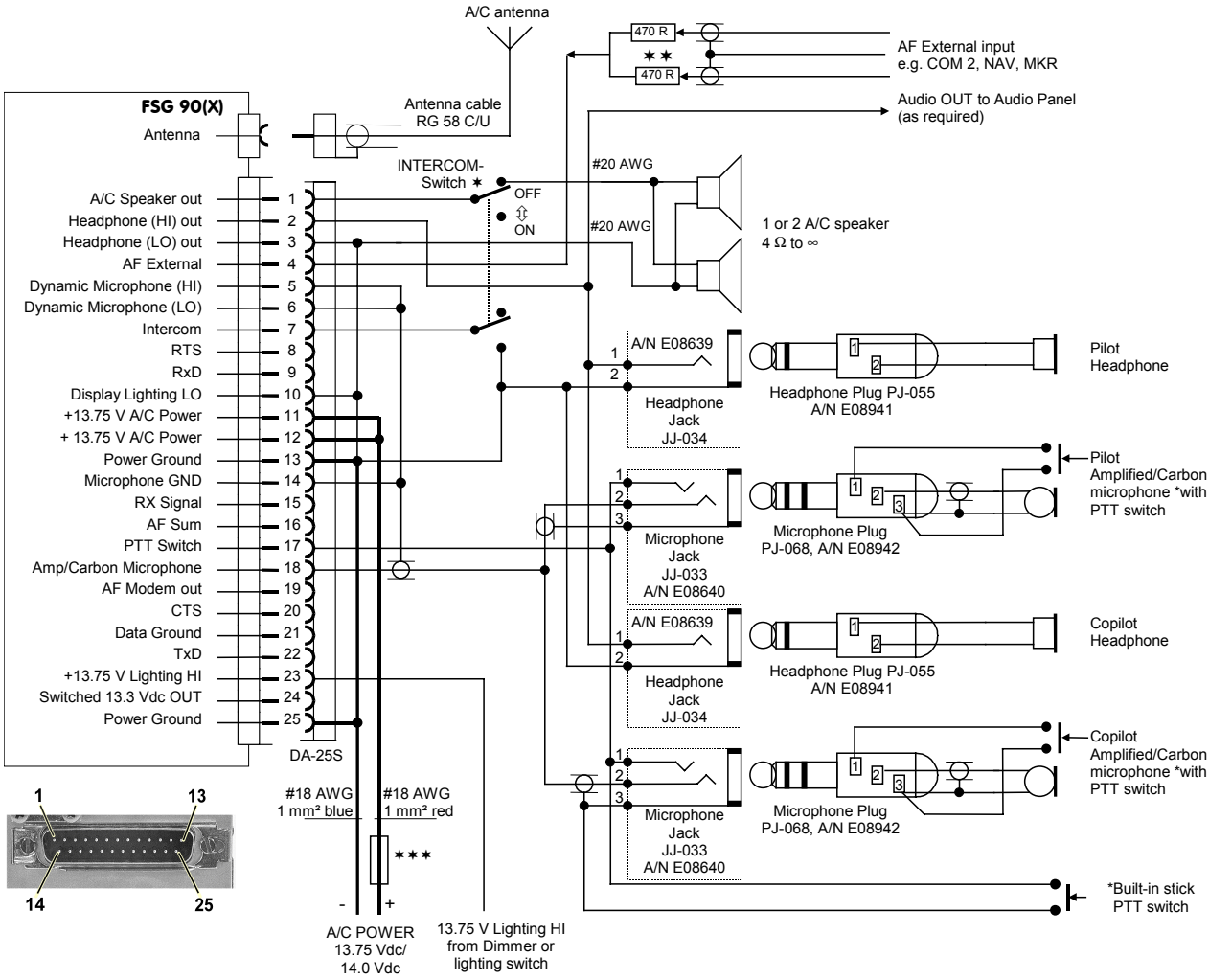

NOTES:

DO NOT wire other pins than noted!

Unless otherwise noted, all wires are #22 AWG (0.3 -0.4 mm²).

Unless otherwise noted, all Power Grounds are airframe grounds.

Intercom operation requires a microphone which provides audio OUT with the PTT key de-energized (not keyed).

Intercom operation requires a selector switch, double pole, double throw.

Terminate audio shields at one end only.

Power bus circuit breakers are to be mounted in the A/C breaker panel or instrument panel such that they will be accessible in flight and safe from physical damage.

* PTT Key/s either at hand-held microphone/s or installed on the yoke.

✶ Wiring without Intercom: connect A/C speaker direct to pins 11 and 15.

✶✶ If more than one AF source isolation resistors 470 Ohm shall be installed.

✶✶✶ 6-W model: Fuse 3.15-Amp quick acting, or circuit breaker 3 Amp.
10-W model: Fuse 5-Amp quick acting, or circuit breaker 5 Amp.

FIG. 3-6: **FSG 90 System**
HOOK-UP DIAGRAM
2 AMPLIFIED/CARBON MICROPHONES
AND INTERCOM

3.5.2 Microphone Connection

Independent of each other, almost any non-amplified dynamic microphone, or amplified Electret or amplified dynamic or standard carbon microphones can be connected to the **FSG 90 System**, without internal jumper setting or soldering.

A amplified/carbon microphone is connected to pin 18, a dynamic microphone is connected to pin 5 of the 25-pole SUB-D receptacle. Avoid any ground loop in microphone wiring (dynamic non-amplified mike shield shall not be connected to any other aircraft wiring, except directly at the assigned pin in the accessory connector).

Up to two IDENTICAL microphones for pilot and copilot can be operated in parallel simultaneously. Even two low impedance (4 Ohm) dynamic microphones may be connected in parallel as well. However, for microphones with less than 30 Ohms, it may be necessary to use a suitable microphone transformer.

The associated microphone ground (shield) for dynamic microphones must be consequently routed galvanically isolated, in order to avoid any ground loop.

This means, dynamic mike ground/shield must be separated from any other grounds for DC input or DC output, AF input and AF output like speaker, phone, PTT and external Audio).

In this context, due to the extremely wide mike input level adjustment range, it is mandatory to understand that correctly matched **FSG 90(X)** mike input sensitivity (SET-UP) will be good ONCE FOREVER for this configuration and to ensure stable operation without audio feedback.

IMPORTANT!

- *The 3-pole mike connector type PJ-069 MUST NEVER be used when using non-amplified dynamic microphones, because ground for mike and PTT is identical. This would create a ground loop and cause unstable / distorted modulation. This PJ-068 is allowed only for amplified/carbon mikes.*
- However, the PJ-068/PJ-55 connector system must be regularly cleaned, contacts shall have sufficient spring-loaded force. This is especially mandatory under vibration operating conditions.

3.5.3 Intercom (IC)

Intercom is suitable for twin seater aircraft with noisy cockpit. Intercom as well as radio operation should employ suitable aircraft headsets which must be matched properly to the transceiver (refer to SET-UP).

Hand-held microphones may be useful for intercom, if audio is not switched/keyed ON / OFF by the PTT function. Keying the mike audio may cause awful cracks, depending on mike technology.

To control the intercom capability, aircraft radio wiring must have a two-pole toggle switch (refer to figure 3-5 or 3-6). The intercom switch disconnects the loudspeaker during IC operation in the IC ON position. Simultaneously, pin 7 of the 25-pole connector is set to ground to select IC ON by continuously activating the microphone amplifier input signal.

With the IC switch in "ON" position it is possible anytime to perform normal transmitting (with the normal PTT key), it also allows continuous intercommunication during receive between pilot and copilot/crew (no PTT action is required for any IC operation).

During receive, while IC is ON, both the IC loudness and external audio volume are temporarily reduced to improve receive intelligibility.

Receiving volume is set on the **FSG 90(X)** front panel (VOL), while intercom volume can be optimized by SET-UP adjustment.

3.5.4 Loudspeaker / Headset interconnection

Two separate AF output exist. The speaker output pin 1 can continuously supply up to two speakers each with 4 Ohms (load > 2 Ohms), while the headphone audio output pins 2 and 3 can accommodate up to 2 or more headphones each with some 600 Ohms, or all may be connected also simultaneously.

When no speaker is installed, this Pin 1 may remain not connected, no spare load is required.

CAUTION!

- ***The magnet compass will be deflected by the speaker's magnetic field. Therefore, when using the*** Walter Dittel ***compact speaker box F10061, a minimum distance of 1.3 m/4.3 ft. between compass and speaker is required.***

3.5.5 AF External Operation

The AF external input pin 4 may be connected to any external (selectable) audio output of any other audio source. 1 Volt rms is necessary to obtain maximum audio volume. Higher AF input may cause audio distortion. External AF will be audible only in Receive mode and in Standby mode, and may be heard in both speaker and headphones. During transmit, the external AF input is disabled.

Continuous interconnection of an external audio source(s) will be suitable especially in aircraft using just one COM and one NAV. The NAV headphone output may then be connected directly to the **FSG 90(X)** external AF input.

This allows in addition to the receiving and intercom function also the simultaneous listening of COM and NAV audio either by headphones or speaker.

Interconnection of more than one external audio source requires additional external decoupling/isolation resistors (470 Ohms, refer to figure 3-6).

The individual audio volume is set directly at the particular external equipment.

IMPORTANT!

- *If external audio sources should be audible via A/C speaker, the external AF input must be enabled in the SET-UP. The 30 mA current saving in standby mode is then disabled.*

To achieve in External Audio operation the maximum **FSG 90(X)** audio output power, a minimum AF input level of 1 Volt rms is required (approx. 10 kOhm input impedance).

Interconnecting AF wiring must use shielded wires in order to avoid interference from strong electrical fields. An eventually magnetic interference coupling shall be especially regarded (distance from high current carrying wiring).

3.5.6 Lighting the Frequency Display

IMPORTANT!

- *Lighting is turned on or off via a separate input, but can be controlled by the radio, if desired.*
- *In order to save current while supplied from battery an external suitable illumination switch is suggested.*

The **FSG 90(X)** includes an LC display which can be back-lit. Pin 23 may be connected either directly to the 13.8 Vdc A/C power (perhaps via a suitable dimmer), or to the switched DC output Pin 24. For display lighting from a 28 Vdc A/C supply, insert a 680 Ohm resistor / 0.5 W, connected in series.

CAUTION!

- ***This way of matching to 28 Volt is only suitable for the lighting!***
- ***The*** **FSG 90(X)** ***always requires a 12 to 14 Volts DC supply.***

3.5.7 Connection to a 28 Vdc airborne system

Interconnection of the **FSG 90(X)** transceivers to a 28 Vdc supply requires a capable voltage converter. Interconnection wiring shall be according to instructions of the DC converter manufacturer. For lighting interconnection refer to Section 3.5.6.

3.6 Post-installation Check

3.6.1 Testing on the Ground with Engine Off

Verification after installation completion

After installing the unit, check all aircraft control movements to be sure no electrical cable interfere with their operation. All aircraft and radio functions shall be tested after installation completion to identify, whether malfunctions caused by mechanical and/or electrical installation work occurs.

This must be performed by an authorized aircraft electronics inspector.

Testing of antenna matching between the **FSG 90(X)** antenna socket (BNC) and the BNC antenna cable connector is required, using a suitable 50 Ohm VHF Reflectometer (VSWR meter), or a directional Wattmeter.

The SWR must be less than 3 : 1 over the full frequency range, tested at least in 1 MHz steps (reflected power shall be less than 25% of the forward RF power output). If this limit is exceeded, this indicates a mismatched antenna and may be caused by wrong antenna radiator or counter weight length/dimensions, poor contacts, or damaged or unsuitable (no 50 Ohm) coaxial cable.

In order to optimize radio range, it is suggested to care for an SWR of less than 2 : 1 (reflected power shall be less than 11% of the forward RF power output).

IMPORTANT!

- *If the antenna is belly mounted, perform antenna matching measurements if possible in flight, or at least while the fuselage is lifted upwards, using wood/non metallic supporting material. This avoids antenna mismatch caused from ground proximity.*

Using known, but distant located fixed stations (VOLMET, ATIS) will also help in determining the radio range, especially in comparison with known, other radio range results of another aircraft at the same position on the ground at a known airfield location, or outside of the hangar or workshop.

3.6.2 Ground checks with engine running

It must be ensured that the aircraft's electrical DC system voltage at the **FSG 90(X)** input terminals is within the tolerances permitted at 14 Vdc (or 28 V with DC converter). Battery only supplied systems operate from 10 to 16.5 Vdc. Such testing requires normal RPM rated at cruising speed.

This testing evaluates both the audio / noise influence, and RF radio range, at least from 10 to 30 km distance to the ground radio station. With cruising RPM, cabin noise background content shall almost not exist. Instead, loud and clear communications shall be achieved!

The microphone shall be in both transmit and intercom mode placed right at the lips in order to obtain maximum voice level at lowest cabin noise content. Speak loud and clear. Verify proper microphone sensitivity setting during SET-UP adjustments prior to the first flight/on ground.

If possible, verify the communications capability also on both the low and high end of the VHF COM band.

If noise (both with Squelch On and Off) occurs only with the engine running, and if its frequency varies with the engine revolutions, it may be caused by an inadequate suppressed ignition system or alternator/voltage regulator equipment, or by poor stabilized on-board supply.

According to ED-14C / RTCA DO-160C requirements, the limits for ripple voltages at 14 Vdc supplies are 0.79 V_{pp} at 0.2 ... 1 kHz, or 1.98 V_{pp} at 1 ... 15 kHz. Double these limits for 28 V systems.

It is easier to determine in receive mode between RF and AF (interference carried on the lines) by temporary removing the antenna plug at the transceiver. RF interference, which usually comes from the ignition or generator/regulator will then disappear.

Ripple on the lines can be detected with an oscilloscope. Its source is usually the generator equipment in conjunction with a poor battery, or poor wiring (bad contacts, defective switches, inadequate wiring dimensions, ground loops (more than one ground connection to the airframe).

Often will bad contacts in the antenna system, or other vibration dependent metal parts contacts vary with the engine RPM cause RF interfering distortion. A noise attenuating headphone assists typical acoustic failure characteristics identification.

SECTION 4 FUNCTIONAL DESCRIPTION

4.1 Introduction

This Section contains a functional description of each switch, push button, knob, indicator, display and socket located on the front or rear of the **FSG 90(X)** together with operating instructions.

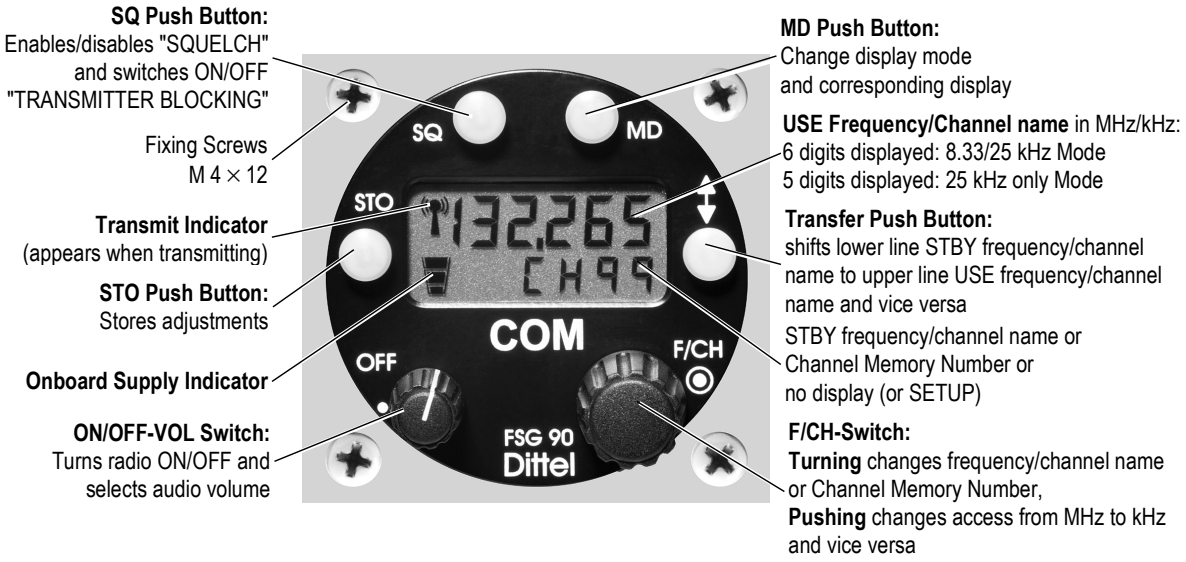

FIG. 4-1: OPERATOR'S CONTROLS AND INDICATORS

4.2 Operator's Controls

Control	Description/Function
ON/OFF-VOL 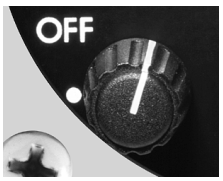	Rotary step switch To turn ON the radio rotate the **ON/OFF-VOL** knob clockwise from the OFF position (dot). When power is activated • all segments of the display are momentarily visible, • the automatic squelch is activated, • the display shows the frequency/ channel name in that operating mode, which was used before last turning off. Rotating the **ON/OFF-VOL** knob clockwise increases - turning counter-clockwise decreases the audio volume audible in the a/c loudspeaker (receive only) or connected headphone (TX Sidetone and receive). To turn OFF the radio rotate the **ON/OFF-VOL** knob fully counterclockwise (ccw) to the OFF position (dot). Blank display.

SQ (SQUELCH) 	Push button After turning ON the radio **FSG 90(X)** the automatic squelch is always active. Momentarily pushing the **SQ**-Button • puts the radio into the SQ-OFF mode (overrides the automatic squelch). Basic receiving noise is also audible during standby. Maximum receiving range. Increased current consumption. • 'Transmitter Blocking' is inactive, i.e. transmitting is possible even if the channel is busy. Momentarily pushing the **SQ**-Button once again • puts the radio into the standard operating mode, automatic squelch is active. No receiving, noise during standby. Only reception of signals above SQ threshold to be heard. • When the squelch is active 'Transmitter Blocking' is active, i.e. transmitting is only possible when the channel is not busy. **Note:** For certain purposes 'Transmitter Blocking' may be permanently switched OFF. Refer to SET-UP procedure, Section 5.
MD (mode) 	Push button Repeatedly pushing the **MD** (mode)-button alters the display mode and display respectively: **Use/STBY Mode:** upper line USE frequency lower line STBY frequency **Channel Mode:** upper line USE frequency lower line channel memory number **Direct Tune Mode:** upper line USE frequency lower line blank
TRANSFER 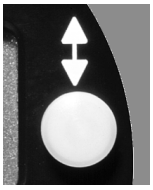	Push button Momentarily pushing the Transfer button • while in CHANNEL or DIRECT TUNE mode will return the radio to USE/STBY mode, **or** • while in USE/STBY mode the last USE frequency will become the new STBY frequency and the last STBY frequency will become the new USE frequency, **or** • while in the SET-UP mode will return the radio to the display mode used before without power down. Only programmed settings stored previously by pushing the **STO**-button will be active.

F/CH 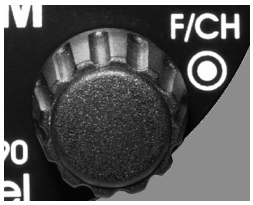 	Rotary control <u>and</u> push button = dual function **Momentarily pushing the F/CH knob** • while in the USE/STBY or DIRECT TUNE mode changes the access from **kHz** to **MHz** or vice versa from **MHz** to **kHz**. • If there is no activity for 30 seconds the **F/CH** knob will return to the kHz access. • While in the CHANNEL mode pushing the **F/CH** knob is without function. **Rotating the F/CH knob** • while in the USE/STBY mode will increment or decrement the MHz or kHz portion of the STBY frequency with rollover at each band edge, • while in the CHANNEL mode changes the channel memory number and corresponding frequency. Only channel numbers which were programmed before will appear, • while in the DIRECT TUNE mode will increment or decrement the MHz or kHz portion of the USE frequency with rollover at each band edge.
STO (STORE) 	Push button Up to 99 frequencies/channel names in <u>each</u> operating mode (combined 8.33/25 kHz mode <u>and</u> '25 kHz only' mode) may be stored in a non-volatile memory. The channel memory numbers (1 … 99) are user programmable. **Programming a frequency:** Set the frequency or channel name to be stored in the upper line at the display! Initialize storing by pushing the **STO** button. The last used channel memory number is displayed in the lower line. A flashing "CH" shows "ready to store". Select appropriate (new) channel memory number (1 to 99) by rotating the **F/CH** knob. On a free channel memory an additional "F" (free) is displayed. To enter the new frequency/channel name push the **STO**-button. The frequency/channel name will be stored under the adjusted channel memory number. A previously stored frequency/channel name will be overwritten. The last used operating mode is displayed. **Programming in the SET-UP mode:** In the SET-UP mode all settings must individually be confirmed by pushing the **STO** button. Otherwise the settings are **not permanently** stored.

4.3 Frequency Display, 5-digit or 6-digit Liquid Crystal Display (LCD),two lines, can be back-lit.

IMPORTANT!

- ***When the* FSG 90 *or* FSG 90-H1 *shows a 6-digit display the radio is operating in the combined 8.33/25 kHz mode.***
- ***When the* FSG 90 *or* FSG 90-H1 *shows a 5-digit display the radio is operating in the '25 kHz only' mode.***
- ***Frequency and channel name display complies with ICAO rules!***
- ***The following displays are examples only!***

Transceiver operates in the **8.33/25 kHz mode (6-digit display)**
Upper line: USE channel name (display 135.090 = 135.0916 MHz transmit and receive frequency)
Lower line: STBY channel name (display 118.065 = 118.0666 MHz transmit and receive frequency)
Supply indicator: 3 segments: ≥ 12.7 Vdc, supply OK
TX indicator: OFF, radio receives.

Transceiver operates in the **'25 kHz only' mode (5-digit display)**
Upper line: USE frequency (display 135.87 = 135.875 MHz transmit and receive frequency)
Lower line: STBY frequency (display 118.02 = 118.025 MHz transmit and receive frequency)
Supply indicator: 3 segments: ≥ 12.7 Vdc, supply OK
TX indicator: OFF, radio receives.

Transceiver operates in the **8.33/25 kHz mode (6-digit display)**
Upper line: USE channel name (display 127.460 = 127.4583 MHz transmit and receive frequency)
Lower line: Channel memory number (19) associated with the above USE channel name
Supply indicator: 2 segments: ≥ 12.0 Vdc, battery ½ charged
TX indicator: **ON**, radio transmits.

Transceiver operates in the **'25 kHz only' mode (5-digit display)**
Upper line: USE frequency (display 124.77 = 124.775 MHz transmit and receive frequency)
Lower line: Channel memory number (75) associated with the above USE frequency
Supply indicator: 2 segments: ≥ 12.0 Vdc, battery ½ charged
TX indicator: **ON**, radio transmits.

STO button got pushed (same function at 5-digit display).
Upper line: Channel name (6-digits) to be stored
Lower line: Free channel memory number **07** (**CH** is flashing)
After pushing the **STO** button once more the channel name 121.875 (= 121.875 MHz) will be stored in the channel memory **07**.
The last used operating mode is displayed.

STO button got pushed (same function at 5-digit display).
Upper line: Channel name (6-digits) to be stored
Lower line: Channel memory number **17** (**CH** is flashing)
After pushing the **STO** button once more the channel name 121.375 (= 121.375 MHz) will be stored in the channel memory **17**. A previously stored channel name will be overwritten.
The last used operating mode is displayed.

4.4 Connectors at rear side

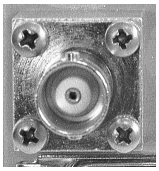

50 Ω BNC jack,

mating plug: BNC plug, UG 88/CU

Connects a suitable COM broad-band antenna with a frequency range of at least 118 - 137 MHz.

Refer to section 3.4.3 for Installation.

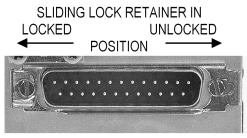

25-pole SUB-D receptacle, male, with sliding lock retainer

mating plug: 25-pole SUB-D, female, DA-25S, (A/N F10212: solder type, including shell and mounting hardware),

to connect the aircraft wiring. Refer to section 3.5 for wiring.

THIS PAGE
INTENTIONALLY
LEFT BLANK

SECTION 5 SET-UP PROCEDURE

This section contains a description of the SET-UP procedure to be carried out by an **experienced avionics technician**. To carry out the SET-UP procedure the radio must be completely wired and ready to use.

DANGER!

- ***During SET-UP procedure the radio is partly unable to work. The radio can neither receive nor transmit!***
- ***NEVER carry out a SET-UP during flight or whilst driving a car! Perform SET-UP only whilst standing safely on the ground!***
- ***Before the next flight or application check all settings of the radio and cockpit instruments for correct function!***

IMPORTANT!

- *The* **FSG 90(X)** *is factory pre-set for check and testing purposes. To achieve maximum performance it is therefore absolutely necessary to* ***optimize*** *the radio and to adapt the accessories used.*
- *To carry out the set-up the radio must be ready for operation (antenna connected, power supply OK, operational microphone/s, headset/s).*
- *If headsets are used turn theirs volume control to maximum, if applicable.*
- *All frequencies, channel names, channel memory numbers etc., shown in the following illustrations, are* ***examples****!*

The following settings can be selected or adjusted (order):

1.	SQUEL h1	Adjusting the automatic squelch threshold
2.	Micro	Adjusting the microphone sensitivity
3.	Intco	Adjusting the Intercom volume (headset)
4.	t SidE	Adjusting the Transmit Sidetone volume (headset)
5.	PhonE	Adjusting the headset volume (during Receive, independent from speaker volume)
6.	SEt 8.33	Selecting '25 kHz only' channel spacing or combined 8.33 kHz / 25 kHz channel spacing. Confirmation with **STO** starts new mode at once.
7.	ch 39 132.765	Deleting occupied channel memories (one after the other)
8.	AF-E 0	Selecting AF External via A/C speaker ON (1) or OFF (0).
9.	FrEq 1	Selecting 'CHANNEL MODE' only (1) or 'Free Frequency Selection' (0)
10.	bLOC 1	Selecting 'Transmitter Blocking' during receive ON (1) or OFF (0)
11.	SErv 0	Service, ON (1) or OFF (0)
12.	OPt 1 0	Optional module, ON (1) or OFF (0)
13.	PASS 00000	Entering a password: protects against unauthorized changes of the radio parameters.

5.1 Calling SET-UP without password

Calling the SET-UP procedure without password is possible:

1. at ex works radios **FSG 90(X)**, or
2. at radios which are reset to a factory basic setting (refer to chapter **RESET**), or
3. at radios which are not protected by a password against unauthorized changes of the set-up adjustments.

- Turn OFF the radio (**ON/OFF-VOL** knob fully ccw).
- **PUSH AND HOLD both MD and STO buttons**, then turn **ON** the radio (rotate **ON/OFF-VOL** knob clockwise, approximately mid position).
- All segments of the display appear for a short moment then the display gets blank.
- Release the buttons.

- After releasing the buttons the display shows in the upper line alternately **»FSG90«** and **»SET-UP«.**
- If there is no activity for 60 seconds the radio will return to the mode used before.
- Momentarily pushing the **MD** button once will open the set-up menu to adjust the squelch threshold.
- Repeatedly pushing the **MD** button will open all other set-up menus in the order described before.

5.2 Calling SET-UP with password

Calling the SET-UP procedure with password must be carried out at radios which are protected by a password against unauthorized changes of the set-up adjustments.

- Turn OFF the radio (**ON/OFF-VOL** knob fully ccw).
- **PUSH AND HOLD both MD and STO buttons**, then turn **ON** the radio (rotate **ON/OFF-VOL** knob clockwise, approximately mid position).
- All segments of the display appear for a short moment then the display gets blank.
- Release the buttons.

- After releasing the buttons the display shows in the upper line alternately **»FSG90«** and **»SET-UP«**, in the lower line **5 dashes.**
- If there is no activity for 60 seconds the radio will return to the mode used before.
- With the **F/CH** knob set the first digit of your password (the first dash changes to digit). Confirm the first digit by pushing the **F/CH** knob. The second digit is ready to be adjusted.
- With the **F/CH** knob set the second digit of your password (the second dash changes to digit). Confirm the second digit by pushing the **F/CH** knob.
- Continue till all five digits of your password are entered.
- Confirm the last digit input by pushing the **STO** button. This will open the set-up menu to adjust the squelch threshold. Repeatedly pushing the **MD** button will open all other set-up menus in the order described before.
- Entering a wrong password will return the set-up to the initial status (5 dashes).
- After the fourth attempt to open the set-up with a wrong password the radio returns to the operating mode used before trying to open the set-up. The **FSG 90(X)** is operational.

5.3 Interrupt the SET-UP procedure

The SET-UP procedure may be interrupted at any time:

- Usually by turning OFF the power (**ON/OFF-VOL** knob fully ccw). All changed and individually stored adjustments (by pushing the **STO** button) are permanently stored and effective after turning ON the radio again.
- or by pushing the **Transfer button** (⇧). The radio returns to the operating mode used before. All changed and individually stored adjustments up to now (by pushing the **STO** button) are permanently stored and effective.

5.4 SET-UP procedure

IMPORTANT!

- *The settings can be done in any order!*
- *Repeatedly pushing the **MD** button opens the menus step by step.*
- *Only settings confirmed by finally pushing the **STO** key are permanently stored and effective.*
- *When pushing the **STO** button the upper segment of the Onboard supply indicator will light up to confirm storing visually.*

5.4.1 Adjusting the automatic squelch threshold

The display shows in the upper line alternately **»SET«** and **»SQUEL«**, in the lower line **»LO«**, **»MED1«**, **»MED2«** or **»HI«**.

Adjust by rotating the **F/CH** knob the squelch threshold as required. The lower line shows:

LO	ca. 1.0 µV / -107 dBm (default setting)
MED1	ca. 2.5 µV / -99 dBm
MED2	ca. 5.0 µV / -93 dBm
HI	ca. 8.0 µV / -89 dBm (this setting exceeds the required minimum sensitivity, adjust only for test purposes at very strong interference levels!)

- Confirm your adjustment by pushing the **STO** button!
- If you want to carry on with the SET-UP procedure push once or repeatedly the **MD** button till the desired menu appears.

5.4.2 Adjusting the microphone sensitivity (Dynamic or amplified/carbon microphones)

IMPORTANT!

- *This adjustment is important particularly when **FSG 90(X)** is used in noisy environment like turboprop airplanes or vehicles:*
  *Turn your radio OFF (**ON/OFF-VOL** knob fully ccw).*
  *The **FSG 90(X)** should be turned ON only after engine start-up.*
  Select a free frequency/channel name (no communication audible). Then call the SET-UP procedure.
- *During this adjustment the transmitter is keyed. Carry out adjustment quickly!*
- *Up to two microphones of the same type may be connected parallel to the mic input (dynamic **or** amplified/carbon type).*
- *Parallel operated microphones must have the same specifications.*
- *This adjustment has to be repeated when changing microphones (brand, type or number)*

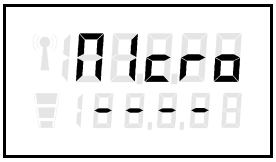

The display shows in the upper line alternately **»SET«** and **»MICRO«**.

- **ONLY FOR ENGINE POWERED AIRPLANES AND VEHICLES: RUN THE ENGINE IN IDLE.**

Press and hold the PTT key. Talk in a loud, clear voice with the microphone one or two inches from your lips.

While talking the microphone level is measured. By turning the **F/CH** knob left or right set the upper dash line to three to four segments (the lower dash line shows only informative the actual range).

Release the PTT key and stop talking.

- **RUN THE ENGINE IN CRUISING SPEED.**

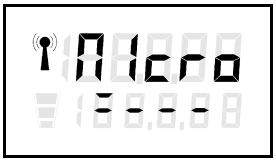

Press and hold the PTT key for at least 5 seconds, **do not talk!**

The upper dash line should show not more than one segment.

If the display shows more than one segment the mic input is too sensitive. Repeat adjustment with less sensitivity (only two to three segments visible when talking).

- Confirm your adjustment by pushing the **STO** button!
- If you want to carry on with the SET-UP procedure push once or repeatedly the **MD** button till the desired menu appears.

5.4.3 Adjusting the Intercom volume

IMPORTANT!

- *Intercom is only possible via headsets (microphones and headphones).*
- *The radio must be wired with an Intercom harness (IC switch) and two headsets connected.*

The display shows in the upper line alternately **»SET«** and **»INTCO«**.

Enable Intercom by switching ON the Intercom switch.

Talk in a loud, clear voice with one of the microphones one or two inches from your lips.

DO NOT PRESS THE PTT KEY!

While talking adjust with the **F/CH** knob a convenient headphone volume. The segments show the actual range. If more than four segments are shown overmodulation occurs.

- Confirm your adjustment by pushing the **STO** button!
- If you want to carry on with the SET-UP procedure push once or repeatedly the **MD** button till the desired menu appears.

5.4.4 Adjusting the Sidetone volume

IMPORTANT!

- *Sidetone audible during transmit is only possible via headphones (if applicable set maximum volume at the headset)*
- *During this adjustment the transmitter is active. Carry out adjustment quickly!*
- *The microphone(s) sensitivity has to be adjusted properly (refer to section 5.4.2)*

The display shows in the upper line alternately **»SET«** and **»SIDE«**.
Press and hold PTT key. Talk in a loud, clear voice with the microphone one or two inches from your lips.
While talking adjust with the **F/CH** knob a convenient headphone volume. The segments show the actual range. If more than four segments are shown overmodulation occurs.
Release PTT key.

- Confirm your adjustment by pushing the **STO** button!
- If you want to carry on with the SET-UP procedure push once or repeatedly the **MD** button till the desired menu appears.

5.4.5 Adjusting the headset volume

IMPORTANT!

- *Receiving is possible via aircraft loudspeaker <u>and</u> headphone.*
- *First set with the **ON/OFF-VOL** knob loudspeaker volume to a convenient level, then adjust with the Set-Up procedure a suitable headphone volume.*

The display shows in the upper line alternately **»SET«** and **»PHONE«**.
Via a/c speaker noise or communication is audible.
With the **ON/OFF-VOL** knob set a/c speaker output to a convenient level, then leave **ON/OFF-VOL** knob as it is.
Put on headphone.
By rotating the **F/CH** knob adjust headphone level to a suitable volume. The dashes show the range.
If the adjustment range is not sufficient increase or decrease with the **ON/OFF-VOL** knob.

- Confirm your adjustment by pushing the **STO** button!
- If you want to carry on with the SET-UP procedure push once or repeatedly the **MD** button till the desired menu appears.

5.4.6 Selecting '25 kHz only' or combined 8.33/25 kHz channel spacing

IMPORTANT!

- ***Selecting either 8.33/25 kHz or '25 kHz only' may be necessary due to National Regulations.***

The display shows flashing in the upper line **»SET«**, in the lower line either **»25«** or **»8.33«**.

By rotating the **F/CH** knob select the required channel spacing:

»25« = '25 kHz only' channel spacing

»8.33« = combined 8.33 and 25 kHz channel spacing.

IMPORTANT!

- *Confirm the new channel spacing by pushing the **STO** button! The selected channel spacing becomes active and simultaneously SET-UP procedure will automatically closed down.*
  *The radio returns to the last used operating mode and the settings confirmed with the **STO** button became effective.*
- *If you want to carry on with the SET-UP procedure call again SET-UP. Push once or repeatedly the **MD** button till the required menu appears.*

5.4.7 Deleting occupied channel memories

IMPORTANT!

- *Only channel memory numbers from 5 … 99 can be deleted. Channel memories 1 to 4 can only be overwritten.*
- *On an occupied channel memory the channel memory number is displayed in the upper line, the associated frequency/channel name in the lower line.*
- *On a free channel memory the channel memory number is displayed in the upper line, the lower line shows* **»FREE«**.

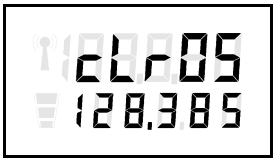

EXAMPLE:

The display shows in the upper line alternately **»CLR 05«** and **»CH 05«** and in the lower line the associated frequency.

EXAMPLE: Channel memory number **»39«** (with the channel name 132.765) should be deleted.

By rotating the **F/CH** knob adjust the channel memory number **»39«** at the display.

If this channel memory should really be deleted confirm by pushing the **STO** button. In the lower line the frequency/channel name disappears, it appears **»FREE«**.

- If further memory channels should be deleted adjust with the **F/CH** knob the channel memory number concerned and delete each by pushing the **STO** button.
- If you want to carry on with the SET-UP procedure push once or repeatedly the **MD** button till the desired menu appears.

5.4.8 Selecting AF EXTERNAL via a/c speaker ON/OFF

IMPORTANT!

- *Always switch OFF AF EXTERNAL ("0") when the radio* **FSG 90(X)** *is battery powered, it saves approximately 30 mAmps.*

The display shows in the upper line alternately **»SET«** and **»AF - E«**, in the lower line **»0«** or **»1«**.

Adjust by rotating the **F/CH** knob the lower line to "0" or “1”.

0 = AF EXTERNAL OFF, AF external audible only via headset
1 = AF EXTERNAL ON, audible via aircraft speaker.

- Confirm the adjustment by pushing the **STO** button, if required!
- Carry on with the SET-UP procedure by pushing once or repeatedly the **MD** button till the desires menu appears..

5.4.9 Selecting 'CHANNEL MODE ONLY' or 'NO RESTRICTION'

IMPORTANT!

- *For certain applications (usually ground operation only) free selection of all frequencies by the operator may be restricted. Then transmitting and receiving is only possible in the* ***CHANNEL MODE****, pre-programmed before by authorized personnel.*

The display shows in the upper line alternately **»SET«** and **»FREQ«**, in the lower line **»0«** or **»1«**.

Adjust by rotating the **F/CH** knob lower line to "0" or "1".

0 = Default setting, free frequency selection, no restriction.
1 = **CHANNEL MODE only**, no other frequencies/channel names adjustable by operator.

- Confirm your adjustment by pushing the **STO** button!
- Carry on with the SET-UP procedure by pushing once or repeatedly the **MD** button till the desired menu appears.

5.4.10 Selecting 'TRANSMITTER BLOCKING' during receive (ON/OFF)

IMPORTANT!

- *Whenever 'Transmitter Blocking' is ON and squelch is ON, transmitting is disabled as long as the frequency/channel name is busy (communication audible).During that, no Sidetone is audible, even if PTT is pressed and one is talking into the microphone.*
- *Whenever the squelch is OFF 'Transmitter Blocking' is OFF and transmitting is possible even on a busy channel.*

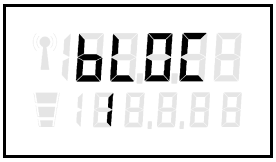

The display shows in the upper line alternately **»SET«** and **»BLOC«**, in the lower line **»0«** or **»1«**.

Adjust by rotating the **F/CH** knob the lower line to **»0«** or **»1«**.

0 = 'Transmitter Blocking' is OFF. Transmitting is always possible, even on a busy channel.
1 = 'Transmitter Blocking' is ON. With squelch ON transmitting is only possible on a free channel.

- Confirm your adjustment by pushing the **STO** button!
- Carry on with the SET-UP procedure by pushing once or repeatedly the **MD** button till the desired menu appears.

5.4.11 Service (ON/OFF)

IMPORTANT!

- ***For approved Avionics Shops only!***

The display shows in the upper line alternately **»SET«** and **»SERV«**, in the lower line **»0«**.

0 = Default setting, Service OFF.

- If required, confirm adjustment by pushing the **STO** button!
- Carry on with the SET-UP procedure by pushing the **MD** button.

5.4.12 Optional module (ON/OFF)

IMPORTANT!

- ***Not applicable with this radio.***

The display shows in the upper line alternately **»SET«** and **»OPTI«**, in the lower line **»0«**.

0 = Default setting, Optional module OFF.

- Carry on with the SET-UP procedure by pushing the **MD** button.

5.4.13 Entering a password

IMPORTANT!

- *When the SET-UP of your radio is protected by a password it cannot be changed by any unauthorized persons without knowledge of the password.*
- *Your password consists of five digits!*

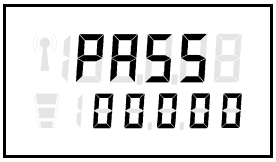

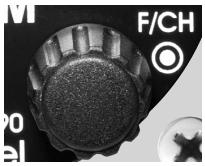

The display shows in the upper line alternately **»SET«** and **»PASS«**, in the lower line **»00000«**.

If you don't want to enter a password and your SET-UP procedure is finished leave the SET-UP menu by pushing the TRANSFER (⇳) button, or turn OFF the radio (**ON/OFF-VOL** knob).

If you want to enter a password proceed as follows:

- Rotate the **F/CH** knob. Adjust the first digit (0 …. 9). Confirm the first digit by pushing the **F/CH** knob.
- Adjust the second digit of your password by rotating the **F/CH** knob. Confirm again by pushing the **F/CH** knob.
- The third digit is ready now. Continue as described above for the third, fourth and fifth digit.
- Make sure the complete password corresponds to your idea.
- Confirm the password by pushing the **STO** button!
- **From now on a new SET-UP may be called only after entering the password first!**

5.4.14 Reset

CAUTION!
Every RESET to the factory setting

- ***deletes all your pre-set memory channels 5 to 99 (in both 8.33/25 kHz and 25 kHz only mode)! Memory channels 1 - 4 get programmed with 118.00 or 118.005 respectively***
- ***deletes your password!***
- ***delete all your individual SET-UP adjustments!***

To reset all adjustments proceed as follows:

- Turn OFF the radio (**ON/OFF-VOL** knob fully ccw).
- **PUSH AND HOLD simultaneously the buttons MD, STO and SQ, then turn ON the radio** (rotate **ON/OFF-VOL** knob clockwise, approximately mid position).
- All segments of the display appear for a short moment then the display gets blank.
- Release the buttons.

After releasing the three buttons the display shows in the upper line alternately **»SET«** and **»RESET«**, in the lower line **»0«**.

If there is no activity for 60 seconds the radio will return to the mode used before.

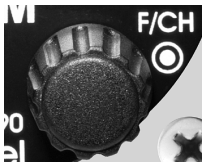

With the **F/CH** knob set lower line to "**1**".

Confirm **RESET** by pushing the **STO** button.

The upper segment of the Onboard Supply Indicator will light up momentarily.

- The VHF radio **FSG 90(X)** is now operable in the factory setting.

THIS PAGE
INTENTIONALLY
LEFT BLANK

SECTION 6 OPERATING INSTRUCTION

6.1 Introduction

This section contain basic operating procedures for the **FSG 90(X)** transceivers. This instruction is only applicable for a radio which is

- correctly installed and wired by a certified avionics shop
- checked together with the a/c system, and
- optimized by the set-up procedure (refer to Section 5, **SET-UP PROCEDURE**).

WARNING!

DO NOT OPERATE THIS RADIO IN AN EXPLOSIVE ATMOSPHERE (PETROLEUM FUELS, SOLVENTS, DUST, ETC.).

6.2 Turning ON - Selecting Frequency/Channel Name - Volume

CAUTION!

- ***The FSG 90(X) should be turned on after engine start-up. This is a simple precaution which helps to protect the solid state circuitry and extends the operating life of your avionics equipment.***

NOTICE: »Frequency« and »Channel Name« are ICAO terms!

Turn the radio **FSG 90(X)** ON by rotating the **ON/OFF-VOL** knob clockwise. Momentarily all segments of the display are visible. Last used operating mode and frequency are displayed.

A warm-up period for the transmitter is not required. However, at temperatures of -20°C / -4°F, the LC display needs approximately one second until it is fully visible when the frequency or operating mode is changed.

To change the operating mode and therefore the display: Push once or twice the **MD** button.

Selecting the appropriate active frequency/channel name depends on operating mode:

EXAMPLE:	**STANDARD: USE/STBY (Standby) Mode**
135.090 118.065	At the lower line select appropriate **kHz** portion by **rotating F/CH** knob. A clockwise rotation will increment the previous frequency while a counter-clockwise rotation will decrement the previous frequency with rollover at each band edge. **Push F/CH** knob; this changes the access to MHz. At the lower line select appropriate **MHz** portion by **rotating F/CH** knob. A clockwise rotation will increment the previous frequency while a counterclockwise rotation will decrement the previous frequency with rollover at each band edge. **Push** the Transfer Button ⇳. The last standby frequency/channel name (lower line) will become the new active frequency/channel name (upper line) and the last active frequency/ channel name will become the new STBY frequency/channel name (lower line).

EXAMPLE: 119.655 CH23	**Channel Mode:** **Important:** The appropriate operating frequency must be stored already in a memory channel (refer to **STORING A NEW FREQUENCY/ CHANNEL NAME**). Select appropriate channel memory number together with the associated frequency/channel name by **rotating** the **F/CH** knob.
EXAMPLE: 123.435 188.8.88	**Direct tune Mode:** Select appropriate kHz portion by **rotating F/CH** knob. A clockwise rotation will increment the previous frequency while a counterclockwise rotation will decrement the previous frequency with rollover at each band edge. **Push F/CH** knob; this changes the access to MHz. Select appropriate MHz portion by **rotating F/CH** knob. A clockwise rotation will increment the previous frequency while a counterclockwise rotation will decrement the previous frequency with rollover at each band edge. The setting is the new active frequency/channel name.

- Rotate **ON/OFF-VOL** knob (1) clockwise, about half way.

Continue with either Receive or Transmit Operation

6.3 Receive (Listen) Operation

- After turning ON the radio the automatic squelch is always ON.
- If the operating mode shall be changed: Push once or twice the **MD** button.
- If the active frequency shall be changed: refer to **6.2 SWITCHING ON - SELECTING FREQUENCY/ CHANNEL NAME - VOLUME**
- **DO NOT** press the PTT (Push-To-Talk) key if you want to receive! Transmit Indicator at the display **must not** appear!
- Normal signals are received, weak signals and interfering pulses are disabled. Set the volume of the a/c loudspeaker or headphone to a comfortable level by rotating **ON/OFF-VOL** knob (in 15 steps).
- Weak signals can be received if the squelch circuit is switched OFF by pushing the **SQ** button. Then typical RX noise is heard during communication breaks.
- Pushing the **SQ** button again switches the squelch circuit ON again.

IMPORTANT!

- ***Switching OFF the squelch only makes sense if long range reception shall take place. Thus the radio is noisy during Standby operation, but no weak signals are suppressed and the full receiving range is available!***
- ***Notice increased current consumption!***

6.4 Transmit (Talk) Operation

IMPORTANT!

- ***Please keep radio discipline!***
- ***Transmit only on a clear channel.***
- ***Since 'Transmit Blocking' is normally activated (refer to Set-Up) transmitting is not possible on a busy channel.***
- ***Care for an all-round obstacle free antenna location; the called station should be within "line-of-sight" distance.***
- ***Never place the radio such as the antenna gets very close to, or touching, exposed parts of the body, especially the face, shoulder or the eyes.***
- ***The radio is equipped with a transmit time out timer (2 minutes). This is used to limit the duration of calls and to guard against accidental PTT locking.***

1. If the display mode shall be changed: Push once or twice the **MD** button.
2. If the USE frequency shall be changed: refer to **6.2 SWITCHING ON - SELECTING FREQUENCY/CHANNEL NAME - VOLUME**.
3. Transmitting is normally only possible on a clear channel (no communication audible).
4. If you have to transmit (e.g. emergency case) although the channel is busy, the "Transmit Blocking" circuit may be turned OFF by pushing the **SQ** button.
5. Press and hold the PTT (Push-To-Talk) key. Talk in a loud, clear voice with the microphone opening 2 to 4 cm (1" - 2") from your lips. Make each transmission as brief as possible. As long as the PTT key is pressed the **Transmit Indicator** at the display appears!
6. Release the PTT key to end transmission and to clear the channel for reception; the Transmit Indicator must disappear. Switch Squelch ON again, if necessary.
7. The radio is equipped with a transmit TOT time out timer. This is used to limit the duration of transmissions to 2 minutes. When the transmitter is keyed continuously longer than 2 minutes the display of the **FSG 90(X)** starts flashing and transmission is disabled.
8. If you have to make calls longer than 2 minutes momentarily release the PTT key and press again.
9. Should the TOT disable the transmitter accidentally (e.g. stuck PTT key) and you have to transmit **turn radio OFF and ON again**. This allows another 2 minutes to transmit.

6.5 Storing a new Frequency/Channel Name

In each active operating mode (8.33/25 kHz mode or '25 kHz only' mode) up to 99 non-volatile channel memories can be user programmed. Channel memories of the non-active mode remain stored in the background. They are accessible after calling up the respective mode.

IMPORTANT!

- *Free selection of frequencies and new storing may be disabled due to Set-Up adjustment (refer to Section 5.4.9)!*
- ***Channel memories 1 to 4 are always preset** and may be used when called. They can only be changed but not deleted. Ex works and after Master Reset channel memories 1 to 4 are preset with either **118.00 MHz or 118.005 MHz!***
- ***Storing can be initialized in all three display modes.***
- ***The USE frequency/channel name in the upper line of the display can be stored to any of the 99 channel memories.***

1. Set the frequency or channel name to be stored in the upper line at the display!
2. Initialize storing by pushing the **STO** button.
3. The last used channel memory number appears, "**CH**" flashes.
4. Select appropriate channel memory number (1 to 99) by turning the **F/CH** knob. On a free memory channel an "**F**" appears before "**CH**" and the memory number.
5. To enter the new frequency/channel name push the **STO**-button. The frequency/channel name will be stored under the selected channel memory number. A previously stored frequency/ channel name will be overwritten.

6.6 Recall of stored Frequency/Channel Name

1. By pushing once or twice the **MD** button select the CHANNEL display mode.
2. By rotating the **F/CH** knob set appropriate channel memory number with its associated frequency/channel name at the display. Only channel numbers that have been programmed previously will appear.

6.7 Squelch (SQ) Operation

During standby (normal operation / no signal received), the squelch is active to disable continuous receiver noise; too weak signals are not heard. The squelch level (normally approx. 1 µV) can be adjusted in the SET-UP menu by 4 thresholds (low, med1, med2, high) to meet best operational requirements.

Signals above the SQ threshold open audio amplifiers for speaker and phone audio output. If, however, very weak signals below the SQ threshold are to be heard (e.g. aircraft far from base) then the **SQ** button is pushed to open SQ, This permits noise during pauses, but weak signals are no longer suppressed, and the full Receiver range is available.

SQ ON also results in significantly lower standby current consumption and extends battery supplied operating time.

DUAL FUNCTION while the SQ is disabled allows, that Transmit is possible even during simultaneous receiving on this channel, in order to enable transmit whenever necessary. Normally, in SET-UP the "BLOC" function is activated (set to "1") to prevent overcrowded channels caused by simultaneous transmissions.

6.8 Intercom

IMPORTANT!

- *To achieve best cabin noise suppression, especially during speech pauses, optimized microphone sensitivity adjustment must be performed during SET-UP-Procedure.*
- *Intercom headset audio volume may be adjusted through SET-UP.*

1. Switch ON Intercom. This activates simultaneously the microphones, while the speaker is disabled.
2. During Receive, through acoustic accessories (headphones with microphones), the **FSG 90(X)** allows intercommunications between pilot(s) and/or other crew members. Always speak loud and clear, while the microphone opening is located close to the lips.
3. By pressing the PTT key the radio switches to transmit -without switching Off Intercom. The "true active" Sidetone is heard during transmit. This allows all intercom parties to monitor also actual cockpit radio communication.
4. Releasing the PTT key turns the radio into Intercom mode again.
5. In addition, both Receive as well as External Audio is audible while Intercom is ON. During Receive, all other audio inputs are reduced in volume. This allows safer listening to the radio signal.
6. Audio volume of external audio signals are adjusted only on the external units.

6.9 AF External

In Standby and Receive mode only, through the External Audio Input, the audio signals of additional units (another COM, VOR, Localizer, Marker, ADF, electric variometer, etc.) are audible simultaneously.

Such complex interfacing requires, that audio volume is set directly on each unit individually.

The VOL control on the **FSG 90(X)** front panel is not affected by external audio sources, and vice versa.

The External AF Input is disabled during transmit.

6.10 Lighting

Depending on aircraft wiring, lighting the frequency display is either activated by turning ON the lighting switch or dimmer, or by turning ON the **FSG 90** radio.

6.11 Turning OFF

Turn OFF the radio by rotating the **ON/OFF-VOL** switch to the fully ccw position to prevent unnecessary discharge of the A/C battery.

6.12 Checking the A/C onboard supply

Transceivers of the **FSG 90 System** include an onboard supply level display with a 3-bar symbol. At dc levels below 11 V those three bars start flashing as a warning!

Radio supplied from a 13.75 V battery bus:

The following operating times may be obtained depending on battery's capacity and transmitter duty cycle:

Reference:	approximately +20°C / +68°F, battery 6.5 Ah, only radio is supplied.
Duty cycle:	10% Transmit, 20% Receive, 70% STBY
Flashing symbol only during Transmit:	ca. 4 hrs left
Flashing symbol also during Receive:	ca. 45 min. left. Recommendation: Reduce utmost transmitting!
Short-time flashing symbol during Standby (SQ ON, clear channel)	ca. 45 min. left. Cease transmitting!
Continuous flashing symbol during Standby (SQ ON, clear channel)	Radio will soon switch OFF itself! Recharge battery as soon as possible (refer to **Section 6.14, Emergency Operation**)

Remark: These transitions are fluent. Recovery effect after load reduction may be possible.

Radio supplied from a 13.75 Vdc generator bus (aircraft or vehicle):

Flashing symbol:	Urgently check aircraft's or vehicle's electrical system (generator, battery, regulator) and/or installation!

Radio supplied from a 28/14 V Regulator (28 Vdc aircraft or vehicle supply):

Flashing symbol:	Urgently check 28/14 V Regulator, aircraft's or vehicle's electrical system (generator, battery, regulator) and installation!

6.13 Operating times of a FSG 90 (6-Watt version) supplied from a 12 V battery only

The following duty cycle of Transmit (TX), Receive (RX) and Standby (STBY) results in available operating time (hours). Both the worst and the most favorable operation conditions are considered, e.g. maximum receiver volume combined with maximum speaker load (2 speakers, 4 Ohms each).

Higher current consumption will degrade the nominally available battery capability, as well as lower temperatures. The following tables show significant time differences depending on current consumption during Receive, and at temperatures.

Prerequisite: Maximum RX audio volume, AF External ON

Max. current drain	**.11 A**	**2.5 A**	**1.0 A**	**.11 A**	**2.5 A**	**1.0 A**	**.11 A**	**2.5 A**	**1.0 A**	**.11 A**
Lead Accumulator 12 Volts **6.5 Ah**	**STBY, w/out RX**	5% TX	5% RX	90% STBY	10% TX	20% RX	70% STBY	20% TX	40% RX	40% STBY
Temperature **- 20°C/-4°F**	38 hrs	12.30 hrs			6.00 hrs			3.10 hrs		
Temperature **+20°C/68°F**	62 hrs	20.10 hrs			10.00 hrs			5.20 hrs		
Temperature **+50°C/122°F**	66 hrs	22.10 hrs			11.10 hrs			6.00 hrs		

Prerequisite: Minimum RX audio volume, AF External OFF (power saving)

Max. current drain	**.08 A**	**2.5 A**	**.25 A**	**.08 A**	**2.5 A**	**.25 A**	**.08 A**	**2.5 A**	**.25 A**	**.08 A**
Lead Accumulator 12 Volts **6.5 Ah**	**STBY, w/out RX**	5% TX	5% RX	90% STBY	10% TX	20% RX	70% STBY	20% TX	40% RX	40% STBY
Temperature **-20°C/-4°F**	57 hrs	15.50 hrs			8.50 hrs			4.40 hrs		
Temperature **+20°C/68°F**	85 hrs	26.10 hrs			14.30 hrs			7.50 hrs		
Temperature **+50°C/122°F**	90 hrs	28.40 hrs			16.20 hrs			8.40 hrs		

6.14 Emergency Operation

Even under low / emergency supply conditions, the **FSG 90(X)** can be operated reliably from as low as 10 Volts supply. This however will reduce both the RF output level and audio output power.

Batteries must be recharged after discharge. However, the **FSG 90(X)** automatic switch-OFF feature at too low supply avoids battery damage, even if the radio is stored in switched ON condition! This is true for all types of 12 V batteries.

THIS PAGE
INTENTIONALLY
LEFT BLANK

APPENDIX A TECHNICAL SUMMARY

A1 General

Type: Frequency Range: Number of Channels: Number of Channel Memories: Nominal Supply Voltage: Nominal TX carrier output:	**FSG 90,** A/N F10185 118.000 MHz to 136.975 MHz with 25 kHz spacing and 118.000 MHz to 136.975 MHz with 8.33/25 kHz spacing 25 kHz spacing: 760 8.33/25 kHz spacing: 2,278, totally 3,038 Channels 99 for Channel names with 8.33/25 kHz spacing. Additional 99 channel memories for frequencies with 25 kHz spacing. 13.75 Vdc ≥ 6 Watt
Type: Frequency Range: Number of Channels: Number of Channel Memories: Nominal Supply Voltage: Nominal TX carrier output:	**FSG 90-H1,** A/N F10302 118.000 MHz to 136.975 MHz with 25 kHz spacing and 118.000 MHz to 136.975 MHz with 8.33/25 kHz spacing 25 kHz spacing: 760 8.33/25 kHz spacing: 2,278, totally 3,038 Channels 99 for Channel names with 8.33/25 kHz spacing. Additional 99 channel memories for frequencies with 25 kHz spacing. 14.0 Vdc ≥ 10 Watt

Supply Voltage Range	11.0 - 16.5 Vdc, continuous
Emergency Operation (below 11 Vdc)	Good communication from 10 Vdc on
Automatic Turn-Off	Approx. 8.5 … 9.5 Vdc Supply
Automatic Turn-On (reset)	Approx. 9.5 … 10 Vdc Supply
Input Current at 13.75 Vdc: Standby (Power Saving Mode) Additionally Squelch, Intercom + AF Ext. Receive Mode (70% AM voice) Transmit Mode (carrier / 70% AM voice) Display Lighting	**6-Watt model:** ≤ 80 mA (no volume, no AF External, no Intercom) add 30 mA w/out AF volume, add 250 mA with max volume ≤ 1 A (into 2 Ohm speaker) ≤ 2.5 A / ≤ 3.0 A ≤ 30 mA additionally
Input Current at 14.0 Vdc: Standby (Power Saving Mode) Additionally Squelch, Intercom + AF Ext. Receive Mode (70% AM voice) Transmit Mode (carrier / 70% AM voice) Display Lighting	**10-Watt model:** ≤ 80 mA (no volume, no AF External, no Intercom) add 30 mA w/out AF volume, add 250 mA with max volume ≤ 1 Amp (into 2 Ohm speaker) ≤ 3.5 A / ≤ 4.5 A ≤ 30 mA additionally
DC Supply indicator	3 segments visible: ≥ 12.7 Vdc Battery full 2 segments visible: ≥ 12.0 Vdc Battery ca. ½ capacity 1 segment visible: ≥ 11.0 Vdc Battery nearly discharged 3 flashing segments: 11 V … 10 Vdc Emergency operation

A2 Dimensions, Weight, Fuses

Front Panel	57 mm dia / 2¼ in. dia, fits a standard panel opening
Depth behind panel	200 mm / 7.85 in. (allow 30 mm/1.2 in. for plugs and harness)
Overall Dimensions	Width = 63 mm/2.5 in., Height = 58 mm/2.28 in., Depth = 223 mm/8.78 in.
Weight **FSG 90**	0.80 kg/1.77 lb. without harness and mating connectors
External Fuse	**6W model:** Cartridge fuse 3.15 Amp, quick acting, or automatic circuit breaker, 3 Amp **10W model:** Cartridge fuse 5 Amp, quick acting, or automatic circuit breaker, 5 Amp
Inline Fuse, switched/regulated DC Output	315 mAmp, medium time lag

A3 Approvals

Airborne Radio (Regulatory Authority For Telecommunications and Posts)	"EC Type-Examination Certificate" no. B132705J, and "TYPE-EXAMINATION CERTIFICATE" no. A132937J
Airborne Radio (Regulatory Authority For Telecommunications and Posts, and LBA)	Reg TP 321 ZV 034 EUROCAE ED-23B: Receiver Class C 25 kHz spacing CLIMAX operation, and Receiver Class E 8,33 kHz spacing Transmitter Class 4 100 NM with 25 kHz spacing, and Transmitter Class 6 100 NM with 8.33 kHz spacing Environmental Requirements EUROCAE ED-14C / RTCA DO-160C: Categories D1-AA(BMN)XXXXXXZBBBATZXXXX
JTSO-Authorization (LBA, **airborne**)	JTSO-2C37e and JTSO-2C38e No. LBA.O.10.911/98 JTSO
Software	EUROCAE ED-12B / RTCA DO-178B, Level D
Ground Operation (Regulatory Authority For Telecommunications and Posts)	"EC Type-Examination Certificate" no. B132705J, and " "TYPE-EXAMINATION CERTIFICATE" no. A132937J"
Ground Operation (DFS)	No. B-7850/97
Requirements for ground operated radios	Reg TP 321 ZV 039 ETSI ETS 300 676 (8.33 kHz CH spacing, ground operation) DIN / ISO 6737-1 (12 V Vehicle Power System)

A4 Receiver Characteristics

Receiver Type	Dual Superhet
IF Frequencies	First IF 10.0 MHz, second IF 455 kHz, high injection
Sensitivity (m = 30% / 1,000 Hz)	≤ 2 µV EMF (≤ -107 dBm/50 Ω) for 6 dB S+N/N
Selectivity	SINAD decreased from 12 dB to 6 dB Reference level m = 60%/1,000 Hz for 12 dB SINAD Interference level m = 60%/400 Hz ≤ 6 dB for ± 8 kHz (25 kHz CH spacing) ≥ 60 dB for ± 17 kHz (25 kHz CH spacing) ≥ 70 dB for ± 25 kHz (25 kHz CH spacing) ≤ 6 dB for ± 3 kHz (8,33 kHz CH spacing) ≥ 50 dB for ± 7.37 kHz (8,33 kHz CH spacing)
Squelch Type	Automatic (FM/AM), adjustable (SETUP); manual override.
AGC Characteristic	≤ 6 dB, 2 µV EMF (-107 dBm) ... 2 V EMF (+13 dBm/50 Ω), m = 30%/1,000 Hz
AGC Delay (RX)	≤ 0.1 sec, 200 mV EMF (-1 dBm) … 2 µV EMF (-107 dBm / 50 Ω), m = 30%/1,000 Hz)
AGC Recovery after TX	≤ 0.1 sec at 10 µV EMF (-93 dBm / 50 Ω), after TX end
Transfer time TX / RX	≤ 50 msec
Modulation distortion (AF Processor OFF)	≤ 10%, 350 ... 2,500 Hz (m = 85%)
Audio Frequency Response / AF Fidelity	≤ +2 dB and -4 dB, 350 ... 2,500 Hz, 25 kHz and 8,33 kHz CH spacing ≥ -20 dB, 4,000 Hz, 25 kHz CH spacing (Climax Offset Operation)
Audio Frequency AGC	≤ 1.5 dB, m = 30% … 90%
Nominal AF Output (Speaker)	≥ 4 Watt / 4 Ω, or ≥ 8 Watt / 2 Ω (at 13.75 Vdc) ≥ 1.5 Watt / 4 Ω (at 10 Vdc)
Nominal AF Output (Phone)	≥ 100 mW / 600 Ω (at 13.75 Vdc) ≥ 50 mW / 600 Ω (at 10 Vdc)
AF Noise Level	≥ 40 dB, m = 30%/1,000 Hz 200 µV EMF (-67 dBm/50 Ω) ... 10 mV EMF (-33 dBm/50 Ω)
AF External Input	≤ 1 Volt into 600 Ω for rated AF output (13.75 Vdc supply)
Spurious Response	≥ 10 mV EMF (-33 dBm), m = 30%/1 kHz, for S+N/N ≤ 6 dB a) 108 - 156 MHz (of any Test Channel ≤ ± 8 kHz), at other than the assigned channel and the adjacent channels b) 50 kHz – 1,215 MHz (except 108 - 156 MHz)
Cross Modulation (AF Processor OFF)	Max. AF output level ≥ 10 dB <u>below</u> nominal AF output level: a) Wanted signal 20 µV EMF (-87 dBm) ... 500 µV EMF (-59 dBm/50 Ω), unmodulated at RX frequency, additional b) Unwanted signal 10 mV EMF (-33 dBm), m = 30%/1,000 Hz, frequency 100 - 156 MHz (frequency ≤ ± 2 RX channels)
Intermodulation (AF Processor OFF)	≤ 6 dB AF Quieting (-5 dBm/50 Ω, 87.5 – 107.9 MHz), 2 signals

Desensitization	Wanted signal 20 µV EMF (-87 dBm), m = 30%/1,000 Hz, at RX frequency, for S+N/N ≥ 6 dB, in the presence of Unwanted signal **A** 10 mV EMF (-33 dBm/50 Ω), unmodulated, frequency 108 ... 156 MHz, except used CH, but includes ≥ 1 RX CH, or Unwanted signal **B** 200 mV EMF (-7 dBm/50 Ω); minimum 10 mV EMF (-87 dBm), unmodulated, frequency 50 kHz – 1,215 MHz, except 87.5 MHz ... 156 MHz, or Unwanted signal **C** 250 mV EMF (-5 dBm), unmodulated, frequency 87.5 ... 107.9 MHz
Receiver Spurious Emission	≤ 400 pW / -64 dBm (50 kHz ... 1,215 MHz)
Channel Selection Time	≤ 0.4 sec, AF level within 3 dB, max. 99 Channel memories
Receiver Muting, Squelch (CLIMAX)	Simultaneous input at RX frequency: a) Wanted Signal **A**: 10 µV EMF (-93 dBm) +8 kHz (m = 30%/1,000 Hz), Squelch is open. b) Unwanted Signal **B**: More than 24 µV EMF (-85 dBm), m = 30% / 1,000 Hz, vary this frequency slowly from -8 kHz to +4 kHz. Squelch must remain open.

A5 Transmitter Characteristics

FSG 90: Nominal TX RF Output Power (normal operation)	≥ 6 Watt / 50 Ω (carrier), ≥ 20 Watt PEP, at 13.75 Vdc -0.5 dB … +1.5 dB
FSG 90-H1: Nominal TX RF Output Power (normal operation)	≥ 10 Watt / 50 Ω (carrier), ≥ 30 Watt PEP, at 14.0 Vdc -0.5 dB … +1 dB
FSG 90: Nominal TX RF Output Power (emergency operation)	≥ 1.5 Watt / 50 Ω (carrier) at 10 Vdc supply
FSG 90-H1: Nominal TX RF Output Power (emergency operation)	≥ 3.5 Watt / 50 Ω (carrier) at 10 Vdc supply
TX Duty Cycle	1 : 4 (1 minute TX / 4 minutes RX)
TX Time Out Timer	After 2 minutes continuous TX. Transmitter is unkeyed automatically and the radio display flashes as a warning.
Modulation	Amplitude modulation, AM (A3E)
Depth of Modulation	≥ 75% (Voice processor with dynamic compression)
Modulation Distortion	≤ 10% (m = 70% / 1,000 Hz) ≤ 15% (m = 70% / 350 ... 2,500 Hz)
Modulation Audio Frequency Response	≤ +2 dB and -4 dB (350 ... 2,500 Hz)
Modulation AF Input for m = 70%	Dynamic Microphone: ≤ 0.5 ... 10 mV symmetrical, sensitivity adjustable in SET-UP. Amplified/Carbon Microphone: ≤ 80 ... 500 mV unsymmetrical, sensitivity adjustable in SET-UP.
True Transmit Sidetone (derived from modulated TX RF signal)	≥ 100 mW / 600 Ω (at 13.75 Vdc supply), ≥ 50 mW / 600 Ω (at 10 Vdc), volume adjustable in SET-UP, independent from speaker volume
Carrier Noise Level	≥ 45 dB (m = 70%/1,000 Hz)
Emission of RF Energy (≤ 1000 MHz)	≤ 0,25 µW (-36 dBm) / 71 dB µV / 3.54 mV / 50 Ω ≤ 4 nW (-54 dBm) / 53 dB µV / 446 µV / 50 Ω, from 47 ... 68, 87.5 ... 137, 162 ... 244, 328 ... 336, 470 ... 862 MHz
Emission of RF Energy (≥ 1000 MHz)	≪ 1 µW / ≪ -30 dBm / ≪ 77 dB µV / ≪ 7 mV / 50 Ω
Transmitter Spectrum Mask	Max. +2 / -4 dB at 350 … 2,500 Hz modulation (8.33 kHz spacing) ≥ 45 dB at 3,200 Hz modulation (8.33 kHz spacing) ≥ 60 dB at ≥ 5,000 Hz modulation (8,33 kHz spacing)
Channel Selection Time	≤ 0.5 sec
Frequency Tolerance	≤ 1 ppm (0°C ... + 40°C / 32°F ... 104°F), ≤ 1.5 ppm (-20°C ... + 55°C / -4°F ... + 131°F)
Unwanted FM (Frequency modulation)	≤ 1.0 kHz at m = 70% / 1,000 Hz
TX Intermodulation	≥ 45 dB
Antenna Mismatching	VSWR ≤ 3 : 1, normal operation At VSWR 3 : 1 the requirements for modulation distortion, spurious and harmonics output as well as frequency stability are met. In addition, the RF output is ≥ 40 % / **FSG 90:** ≥ 2.4 Watt into 50 Ω at 13.75 Vdc. **FSG 90-H1:** ≥ 6 Watt into 50 Ω at 14.0 Vdc. At VSWR ≤ 5 : 1 still functional.

THIS PAGE
INTENTIONALLY
LEFT BLANK

APPENDIX B ENVIRONMENTAL PERFORMANCE CLASSIFICATION

Compliance measurements according to EUROCAE ED-14C / RTCA DO-160 C were performed and the following Environmental Categories fulfilled.

Environmental Conditions	ED-14C DO-160C	Description of conducted tests	Category
Temperature and Altitude	4.0	Equipment tested to category	**D1**
• Low Temperature	4.5.1	Operation -20°C (-4°F) Storage -55°C (-67°F)	
• High Temperature	4.5.2	Operation +55°C (131°F) Storage +85°C (185°F)	
• in-flight Loss of Cooling	4.5.3	No auxiliary cooling required	**-**
• Low Pressure (Altitude)	4.6.1	50,000 ft /15,240 m	
• Decompression	4.6.2	No test required in category D1	
• High Pressure	4.6.3	No test required in category D1	
Temperature Variation	5.0	10°C/min (18°F/min), Equipment tested to category	**A**
Humidity	6.0	Equipment tested to category	**A**
Shock	7.0	Equipment tested to	
• Operational shocks	7.2	6 g	
• Crash safety	7.3	15 g	
Vibration	8.0	Equipment tested to category	**BMN**
Explosion	9.0	No test required	**X**
Waterproofness	10.0	No test required	**X**
Fluids Susceptibility	11.0	No test required	**X**
Sand and Dust	12.0	No test required	**X**
Fungus	13.0	No test required	**X**
Salt Spray	14.0	No test required	**X**
Magnetic Effect	15.0	≤ 13 cm/1°, Equipment tested to category	**Z**
Power Input	16.0	Equipment tested to category	**B**
Voltage Spike	17.0	Equipment tested to category	**B**
Audio Frequency Susceptibility	18.0	Equipment tested to category	**B**
Induced Signal Susceptibility	19.0	Equipment tested to category	**A**
Radio Frequency Susceptibility	20.0	Equipment tested to category	**T**
Radio Frequency Emission	21.0	Equipment tested to category	**Z**
Lightning Induced Susceptibility	22.0	No test required	**X**
Lightning effects	23.0	No test required	**X**
Icing	24.0	No test required	**X**
Other Test	---	No test required	**X**

THIS PAGE
INTENTIONALLY
LEFT BLANK

APPENDIX C ICAO FREQUENCY-CHANNEL PAIRING PLAN FOR COMBINED 8.33 KHZ /25 KHZ OPERATION

The table below shows TX and RX frequency, respective channel spacing and the corresponding channel name or frequency which is shown at the display of the **FSG 90** in the range from 118.000 MHz to 118.1000 MHz.

In combined 8.33 kHz / 25 kHz channel spacing mode, the active Channel Name is displayed with 6 digits.

In "25 kHz only" channel spacing mode, frequencies are displayed with 5 digits.

This allows unique identification of the mode used.

Of course this frequency-channel pairing plan also applies to all other frequencies between 118.1000 MHz and 136.9750 MHz.

Operating frequency (MHz)	Channel Spacing (kHz)	**8.33/25 kHz Mode** Channel Name = Display at **FSG 90**	**25 kHz Mode** Frequency = Display at **FSG 90**
118.0000	**25**	**118.000**	**118.00**
118.0000	8.33	118.005	
118.0083	8.33	118.010	
118.0166	8.33	118.015	
118.0250	**25**	**118.025**	**118.02**
118.0250	8.33	118.030	
118.0333	8.33	118.035	
118.0416	8.33	118.040	
118.0500	**25**	**118.050**	**118.05**
118.0500	8.33	118.055	
118.0583	8.33	118.060	
118.0666	8.33	118.065	
118.0750	**25**	**118.075**	**118.07**
118.0750	8.33	118.080	
118.0833	8.33	118.085	
118.0916	8.33	118.090	
118.1000	**25**	**118.100**	**118.10**
118.1000	8.33	118.105	
etc	etc	etc	etc

THIS PAGE
INTENTIONALLY
LEFT BLANK

APPENDIX D CERTIFICATES

CETECOM ICT Services GmbH

beliehen nach der Beleihungs- und Akkreditierungsverordnung vom 10. Dezember 1997
als Benannte Stelle der Bundesrepublik Deutschland, vertreten durch die
recognised in accordance with the Recognition and Accreditation Ordinance of December 10, 1997
as Notified Body for the Federal Republic of Germany, represented by

Regulierungsbehörde für Telekommunikation und Post

DEUTSCHE BAUMUSTERPRÜFBESCHEINIGUNG
GERMAN TYPE-EXAMINATION CERTIFICATE

Registriernummer: Registration No.:	**A132937J**
Bescheinigungsinhaber: Certificate Holder:	**Walter Dittel GmbH Luftfahrtgerätebau Erpftinger Str. 36 D-86899 Landsberg**
Produktbezeichnung: Product Designation:	**FSG 90, FSG 90F, FSG 90L , FSG 90FL FSG 90-H1, FSG 90F-H1, FSG 90L-H1 , FSG 90FL-H1**
Produktbeschreibung: Product Description:	Funkanlage des beweglichen Flugfunks als Bodenfunkstelle oder an Bord eines Luftfahrzeuges als VHF - Sprechfunkanlage
Produkthersteller: Product Manufacturer:	**Walter Dittel GmbH Luftfahrtgerätebau Erpftinger Str. 36 D-86899 Landsberg**
Vorschriften: Specifications:	**FTZ 17 TR 2010 , Ausgabe März 1988 FTZ 17 TR 2013 , Ausgabe Juni 1989 BAPT 211 ZV 034 (Entwurf) , Ausgabe Januar 1997 BAPT 211 ZV 039 (Entwurf) , Ausgabe Januar 1997 RegTP 321 ZV 034 , Ausgabe Juli 1998 RegTP 321 ZV 039 , Ausgabe März 1998**
Prüfergebnis: Examination Result:	**Das geprüfte Baumuster ist konform zu den genannten Vorschriften. The examined type meets the requirements of the above mentioned specifications**

Diese Bescheinigung ist erstellt in Übereinstimmung mit der Telekommunikationszulassungsverordnung vom 20. August 1997 und gilt nur in Verbindung mit der nachfolgenden **Anzahl** von Anlagen.
The certificate is issued in accordance with the Telecommunications Approval Ordinance from August 20, 1997 and is only valid in conjunction with the following **number** of annexes .
Diese Baumusterprüfbescheinigung ersetzt die Baumusterprüfbescheinigung der Benannten Stelle Regulierungsbehörde für Telekommunikation und Post mit gleicher Registriernummer und Datum vom 13.01.1998 .
This certificate replaces the certificate with the same registration number dated 13.01.1998 by Notified Body Regulierungsbehörde für Telekommunikation und Post .

Anzahl der Anlagen: **1**
Number of annexes:

Saarbrücken, 02.12.1998
Ort, Ausstellungsdatum
Place, Date of Issue

Unterzeichnet von / Signed by Michael Klos
Benannte Stelle / Notified Body

GERMAN NOTIFIED BODY · DEUTSCHE BENANNTE STELLE

CETECOM ICT Services GmbH, Untertürkheimer Straße 6-10, D-66117 Saarbrücken, Germany

---

Anlage 1 zur Deutschen Baumusterprüfbescheinigung Registriernummer: A132937J Datum: 02.12.1998 Seite 1 (2)	Annex 1 of the German Type-Examination Certificate Registration no.: A132937J Date: 02.12.1998 Page 1 of 2

PRODUKT-EIGENSCHAFTEN:
Product characteristics

1.) Produktbestandteile („FSG 90 mit:6 Watt Sender")

- **FSG 90** P/N : F10185 oder F10191
- **FSG 90F** P/N : F10194 oder F10195
- **FSG 90L** P/N : F10208
- **FSG 90FL** P/N : F10210

Produktmerkmale:

Sende-/ Empfangsfrequenzbereich	:	**118,000 MHz ... 136,975 MHz**
Kanalraster	:	**25 kHz und/oder 8,33 kHz**
Betriebskanäle	:	**760 Kanäle** bei 25 kHz - Kanalraster
Betriebskanäle	:	**2278 Kanäle** bei 8,33 kHz - Kanalraster
RF-Leistung	:	**7 W**
Sendeart nach VO-Funk	:	**A3E**
Spannungsversorgung	:	**13,75 VDC (Bereich : 10,5 - 16,5 VDC)**

2.) Produktbestandteile („FSG 90 mit:10 Watt Sender")

- **FSG 90-H1** P/N : F10302 oder F10303
- **FSG 90F-H1** P/N : F10306 oder F10307
- **FSG 90L-H1** P/N : F10310
- **FSG 90FL-H1** P/N : F10312

Produktmerkmale:

Sende-/ Empfangsfrequenzbereich	:	**118,000 MHz ... 136,975 MHz**
Kanalraster	:	**25 kHz und/oder 8,33 kHz**
Betriebskanäle	:	**760 Kanäle** bei 25 kHz - Kanalraster
Betriebskanäle	:	**2278 Kanäle** bei 8,33 kHz - Kanalraster
RF-Leistung	:	**10 W**
Sendeart nach VO-Funk	:	**A3E**
Spannungsversorgung	:	**14,0 VDC (Bereich : 10,5 - 16,5 VDC)**

TECHNISCHE DOKUMENTATION:
Technical Documentation

Prüfberichte:
Testreports

- Nummer : **5234/59632.2/97**
  Number

Prüflabor: BAPT (BZT) , Untertürkheimer Str. 6-10 , 66117 , Saarbrücken

Prüfberichte:
Testreports

- Nummer : **2-0539-A/98** Seiten: **24** Datum: **09.09.1998**
  Number Pages Date

Prüflabor: CETECOM ICT Services GmbH , Untertürkheimer Str. 6-10 , 66117 , Saarbrücken

---

Anlage 1 zur Deutschen Baumusterprüfbescheinigung Registriernummer: A132937J Datum: 02.12.1998 Seite 2 (2)	Annex 1 of the German Type-Examination Certificate Registration no.: A132937J Date: 02.12.1998 Page 2 of 2

Technische Beschreibungen / Handbücher / Schaltpläne / Stromlaufpläne etc.:
Technical Descriptions / Manuals / Circuit schematics :

- Baumusterprüfbescheinigung der Benannten Stelle Regulierungsbehörde für Telekommunikation und Post , Reg.-Nr.: A132937J vom 13.01.1998 mit Verweis auf folgende technische Dokumente :
  - Handbuch FSG 90 Dual-Mode 8.33 kHz / 25 kHz VHF/AM Flugfunkgerät , Stand : Februar 1997
  - Declaration of Design and Performance , Document No.: DDP 031.00, Issue : B , Date of Issue : December 01/1997
  - Prüfbericht : 5234/59632.2/97
- Declaration of Design and Performance , Document No.: DDP 031.00, Issue : D , Date of Issue : November 24 ,1998

******

DFS Deutsche Flugsicherung

Zertifikat

Zertifikat

Eine	***Funkanlage des beweglichen Flugfunks in Bodenfunkstellen als VHF-Sprechfunkanlage***
Typen	***FSG 90, FSG 90F, FSG 90L, FSG 90FL, FSG 90-H1, FSG 90F-H1, FSG 90L-H1, FSG 90FL-H1***
Frequenzbereich	***118,00 – 136,975 MHz***
der Firma	***Walter Dittel GmbH Postfach 1261 86882 Landsberg/Lech***
bestehend aus	***Sender/Empfänger mit Stromversorgung aus dem Niederspannungsnetz oder Batterien***
für die Betriebsart	***A 3 E***

ist auf Einhaltung der Forderungen der DFS Deutsche Flugsicherung GmbH, die in der technischen Vorschrift der Regulierungsbehörde für Telekommunikation und Post (Reg TP 321 ZV 039 Ausgabe März 1998) niedergelegt ist, geprüft worden. Das Gerät entspricht den Vorschriften, die von der DFS Deutsche Flugsicherung GmbH und der Regulierungsbehörde für Telekommunikation und Post auf Grund der Vollzugsordnung für den Funkdienst (VO Funk) des internationalen Fernmeldevertrages aufgestellt wurden, sowie den Forderungen des Bundesministers für Verkehr (BMV) und den Richtlinien und Empfehlungen der internationalen Zivilluftfahrt-Organisation (ICAO) für den Flugfernmeldeverkehr. Es wird daher mit den umseitig aufgeführten Auflagen als Muster zur Herstellung und zum Vertrieb in der Bundesrepublik Deutschland zugelassen.

Die Gerätetypen haben die Serienprüfnummer ***B-7850/97*** erhalten

Das Zertifikat für o.g. Serienprüfnummer mit Ausstellungsdatum 20.3.1998 wird hiermit ungültig.

Offenbach/Main, den 17.2.1999

i. V. W. Bellen
Leiter Navigation

i. A. H. Günzel

Auflagen

1. Jedes Gerät mit der Bezeichnung FSG 90, FSG 90F, FSG 90L, FSG 90FL, FSG 90-H1, FSG 90F-H1, FSG 90L-H1 und FSG 90FL-H1 das mit der umstehenden Serienprüfnummer und mit der Registriernummer der Baumusterprüfbescheinigung der Regulierungsbehörde für Telekommunikation und Post versehen ist, muß mit dem durch die Regulierungsbehörde für Telekommunikation und Post und der DFS Deutsche Flugsicherung GmbH geprüften Mustergerät elektrisch und mechanisch übereinstimmen.

2. Jede Änderung oder Ergänzung des Aufbaues oder der Schaltung des Gerätes gegenüber dem Mustergerät macht eine Nachprüfung dieses Gerätes durch die Regulierungsbehörde für Telekommunikation und Post und die DFS Deutsche Flugsicherung GmbH erforderlich.

3. Bei Herstellung von Seriengeräten die dem Mustergerät entsprechen, bleiben der DFS Deutsche Flugsicherung GmbH Stichproben in Form einer Stückprüfung vorbehalten.

4. Dieses Zertifikat allein berechtigt nicht zum Betrieb eines Gerätes. Einrichten, Errichten und Betreiben einer Funkstelle unter Verwendung dieses Gerätes, auch wenn es sich um eine Vorführung handelt, sind vom Besitz einer Genehmigung der Regulierungsbehörde für Telekommunikation und Post abhängig.

5. Dieses Zertifikat ersetzt keine Zertifizierung nach dem Telekommunikationsgesetz (TKG) oder nach dem Gesetz über die elektromagnetische Verträglichkeit von Geräten (EMVG).

6. Aus der Zertifizierung durch die DFS Deutsche Flugsicherung GmbH können keine Ansprüche auf Zulassung gegenüber anderen Zertifizierungsstellen abgeleitet werden.

7. Aus der Ausstellung des Zertifikates der DFS Deutsche Flugsicherung GmbH können keine Forderungen patentrechtlicher Art hergeleitet werden. Sie befreit in keinem Fall von der Beachtung fremder Schutzrechte und stellt keinen Rechtsschutz, ähnlich dem im Patentgesetz vorgesehen, dar.

8. Für die Einhaltung der Sicherheitsforderungen, die sich aus den Deutschen Normen ergeben und auf das Gerät anzuwenden sind, ist der Hersteller selbst verantwortlich. Die Einhaltung der in Deutschland gültingen Normen ist nicht Gegenstand der Musterprüfung.

BUNDESREPUBLIK DEUTSCHLAND

LUFTFAHRT-BUNDESAMT

a member of

JOINT AVIATION AUTHORITIES

JOINT TECHNICAL STANDARD ORDER (JTSO) AUTHORISATION

Pursuant to the National Regulations for the time being in force and subject to the conditions specified below, the National Aviation Authority Luftfahrt-Bundesamt in accordance with the JAA Procedures for JTSO Authorisation hereby grants

Walter Dittel GmbH

Luftfahrtgerätebau
D-86899 Landsberg/Lech

POA No. LBA.G.0100

a JTSO AUTHORISATION
No. LBA.O.10.911/98 JTSO

according to JAR-21, Subpart O and JAR-TSO,
JTSO-2C37e and JTSO-2C38e

for

8,33kHz and 25kHz 6W/10W VHF Communications Transceiver Families
FSG 90(X) and FSG 90(X)-H1
DDP No. 031.00

CONDITIONS:

1. The JTSO Authorisation Holder is only authorised to identify an article with this JTSO marking whilst remaining in compliance with the conditions for the issue of this Authorisation.

2. This AUTHORISATION shall remain valid until surrendered, withdrawn or otherwise terminated.

Date of issue: 27.10.1999

LUFTFAHRT-BUNDESAMT BRAUNSCHWEIG 10

Hentschel

REGULIERUNGSBEHÖRDE FÜR TELEKOMMUNIKATION UND POST
Regulatory Authority For Telecommunications and Posts

EG-BAUMUSTERBESCHEINIGUNG
EC Type-Examination Certificate

Registriernummer: / Registration no.: B132705J — **Anlage(n): 1** / Annex(es)

Benannte Stelle: / Notified Body: Regulierungsbehörde für Telekommunikation und Post

Bescheinigungsinhaber: / Certificate Holder: Walter Dittel GmbH
Erpftinger Straße 36

D-86899 Landsberg/Lech

Produktbezeichnung: / Designation of product: FSG 90(X) oder FSG 90(X)-H1, Modellvarianten siehe Anlage 1

Produktbeschreibung: / Product description: VHF/AM Sprechfunkgerätefamilie im beweglichen Flugfunkdienst
VHF/AM Air Band Communications Transceiver Family

Angewandte Normen: / Used Norms:

Störaussendung: / (Emission) DRAFT prETS 300 339 (01/97), EN 55022

Klasse: / (Class) B

Störfestigkeit: / (Immunity) DRAFT prETS 300 339 (01/97)

Die EG-Baumusterbescheinigung mit Ausstellungsdatum 13.01.98 wird hiermit ungültig.

Diese Bescheinigung ist erstellt in Übereinstimmung mit der Richtlinie 89/336/EWG (Amtsblatt der Europäischen Gemeinschaften Nr. L 139 v. 23. Mai 1989)
This certificate is issued according to the directive 89/336/EEC (Office Journal of the European Communities L 139 from 23. May 1989)

Ort, Datum: / Place, Date: Saarbrücken, 10.02.99

Unterschrift: / Signed:

Stefan Bach

Regulierungsbehörde für Telekommunikation und Post, Talstraße 34-42, D-66119 Saarbrücken, Tel.:(06 81) 9330-9, Fax: (06 81) 9330-700

Anlage 1 zur EG-Baumusterbescheinigung Nr. B132705J vom 10.02.99 Seite 1 (2)

Annex 1 to EC Type-Examination Certificate No. B132705J Date: 10.02.99 Page 1 of 2

Modellvarianten:
System variants

FSG 90	Model 90-25/8.33 Model 90-25/000	**FSG 90-H1**	Model 90-25/8.33-H1 Model 90-25/000-H1
FSG 90E	Model 90E-25/8.33 Model 90E-25/000	**FSG 90E-H1**	Model 90E-25/8.33-H1 Model 90E-25/000-H1
FSG 90F	Model 90F-25/8.33 Model 90F-25/000	**FSG 90F-H1**	Model 90F-25/8.33-H1 Model 90F-25/000-H1
FSG 90FE	Model 90FE-25/8.33 Model 90FE-25/000	**FSG 90FE-H1**	Model 90FE-25/8.33-H1 Model 90FE-25/000-H1
FSG 90L	Model 90L-25/000	**FSG 90L-H1**	Model 90L-25/000-H1
FSG 90EL	Model 90EL-25/000	**FSG 90EL-H1**	Model 90EL-25/000-H1
FSG 90FL	Model 90FL-25/000	**FSG 90FL-H1**	Model 90FL-25/000-H1
FSG 90FEL	Model 90FEL-25/000	**FSG 90FEL-H1**	Model 90FEL-25/000-H1

Technische Eigenschaften:
Technical Characteristics

Frequenzbereich: / Frequency range 118,000 - 136,975 MHz [all models without suffix (E)] oder/or
118,000 - 149,975 MHz [all models with suffix (E)]

Kanalabstand: / Channel spacing 25 kHz und/oder and/or 8,33 kHz

Sendeleistung: / Transmitter power 6 W [FSG 90(X)] bzw. 10 W [FSG 90(X)-H1]

Spannungsversorgung: / Power supply 10,5 - 16,5 V; DC

Anlage 1 zur EG-Baumusterbescheinigung Nr. B132705J vom 10.02.99 Seite 2 (2)

Annex 1 to EC Type-Examination Certificate No. B132705J Date: 10.02.99 Page 2 of 2

Wesentliche Teile der technischen Dokumentation:
Relevant parts of the technical documentation

Prüfbericht Nr.: / Test Report No.: 1388/00089/97 vom: / of 17.06.1997

Prüfbericht Nr.: / Test Report No.: 1388/00099/97 vom: / of 16.07.1997

Prüfbericht Nr.: / Test Report No.: 2_0539-A/98 vom: / of 09.09.1998

Declaration of Design and Performance, Document No.: DDP 031.00, Issue D
Date of Issue: November 24, 1998

Bemerkung(en):
Remark(s)

Betrieb in

a) Luftfunkstellen oder

b) Bodenfunkstellen (stationär, portabel oder mobil) des beweglichen Flugfunks

Operation in

a) aircraft stations or

b) ground-based stations (fixed, portable or mobile use) in the aeronautical mobile service

****