EXHIBIT E

Circuit Diagram

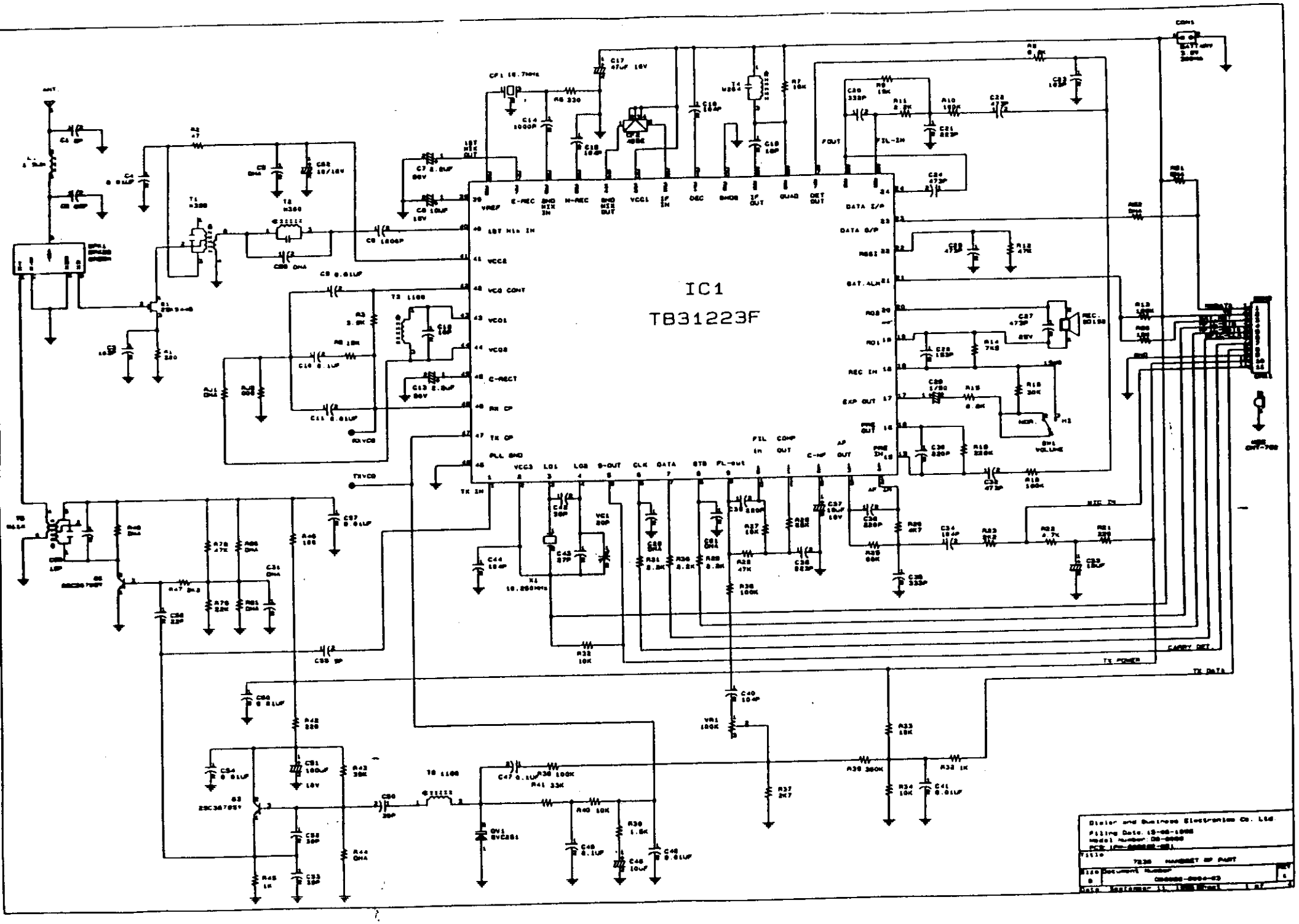
IC1
TB31223F
ANT
CF1 10.7MHz
X1 10.250MHz
VR1 100K
CARRY DET.
TX POWER
TX DATA
MIC IN
Dialor and Business Electronics Co. Ltd.

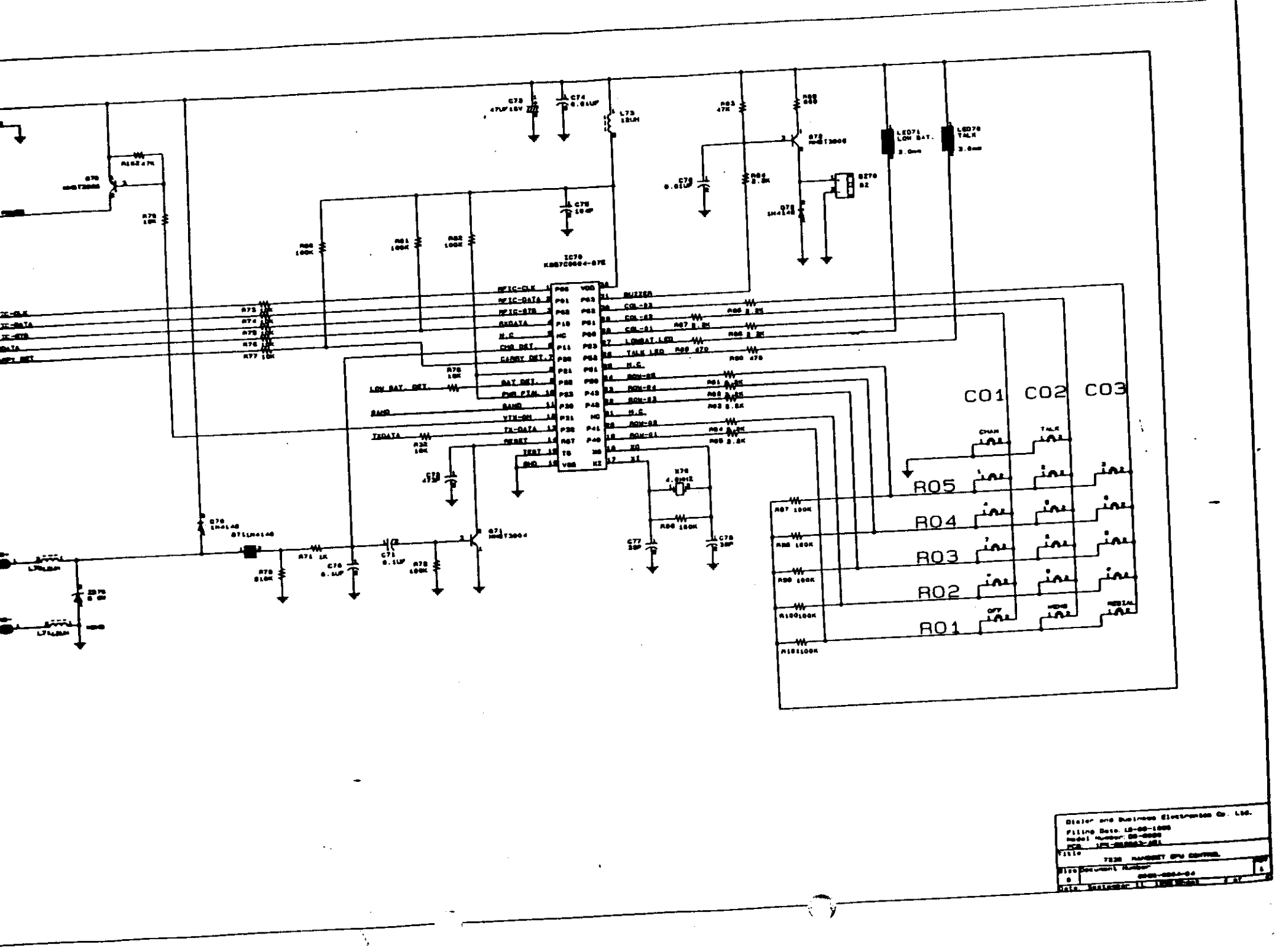
IC70
KM87C0004-07E
RFIC-CLK
RFIC-DATA
RFIC-STB
SHDATA
N.C
CHG DET.
CARRY DET.
BAT DET.
PWR FAIL
BAND
VTX-ON
TX-DATA
RESET
TEST
GND
P00
P01
P02
P10
NC
P11
P20
P21
P30
P31
P32
P07
TS
VSS
VDD
P03
P04
P05
P06
P42
P43
P40
P41
NC
X0
X1
BUZZER
COL-03
COL-02
COL-01
LOWBAT LED
TALK LED
N.C
ROW-05
ROW-04
ROW-03
ROW-02
ROW-01
N.C
LOW BAT. DET.
BAND
TXDATA
LED71
LOW BAT.
LED70
TALK
CO1
CO2
CO3
R05
R04
R03
R02
R01
CHAN
TALK
OK
MENU
MODIAL

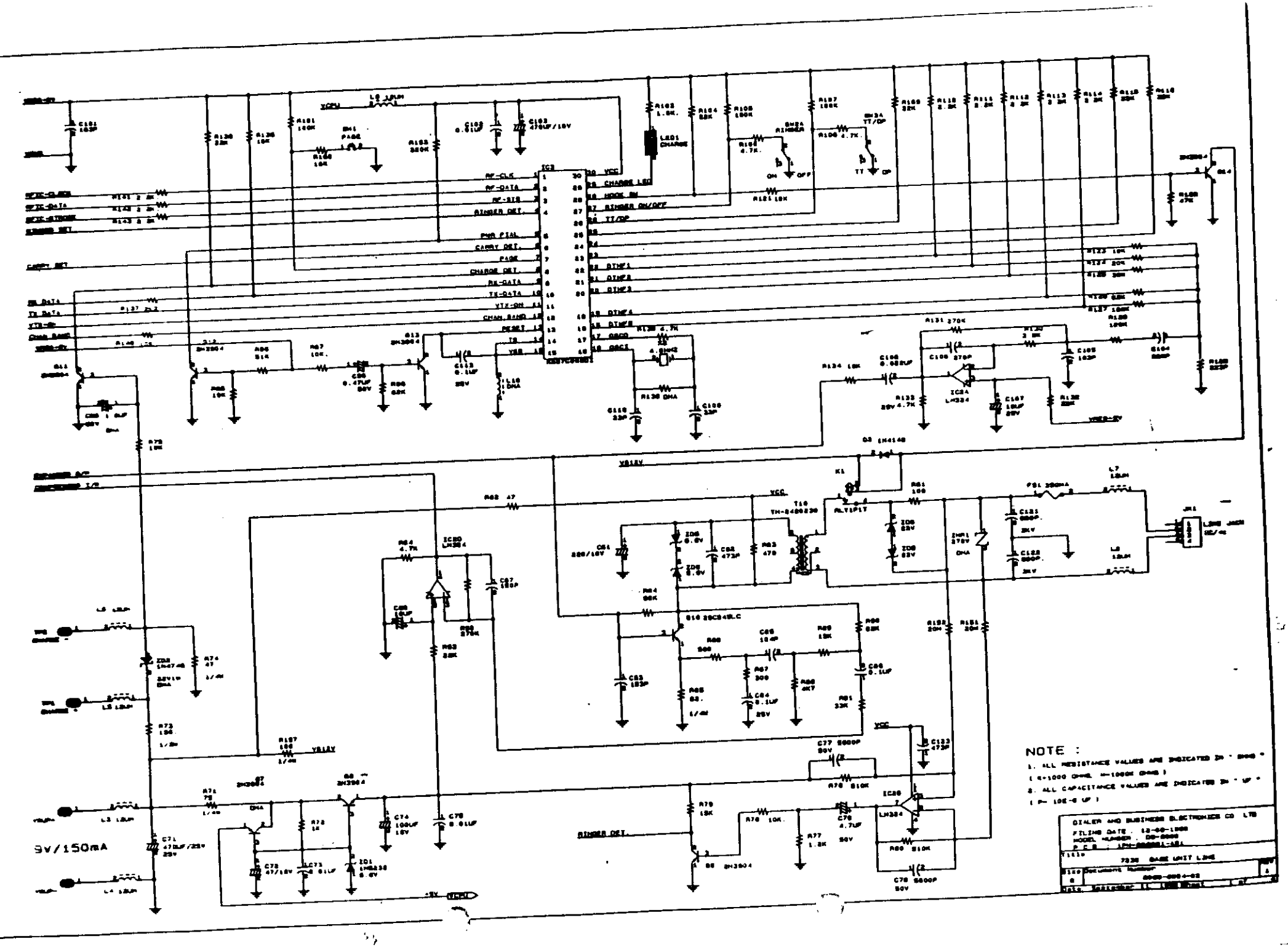
9V/150mA
NOTE :
1. ALL RESISTANCE VALUES ARE INDICATED IN " OHMS "
(K=1000 OHMS M=1000K OHMS)
2. ALL CAPACITANCE VALUES ARE INDICATED IN " UF "
(P= 10E-6 UF)
DIALER AND BUSINESS ELECTRONICS CO LTD
7330 BASE UNIT LINE

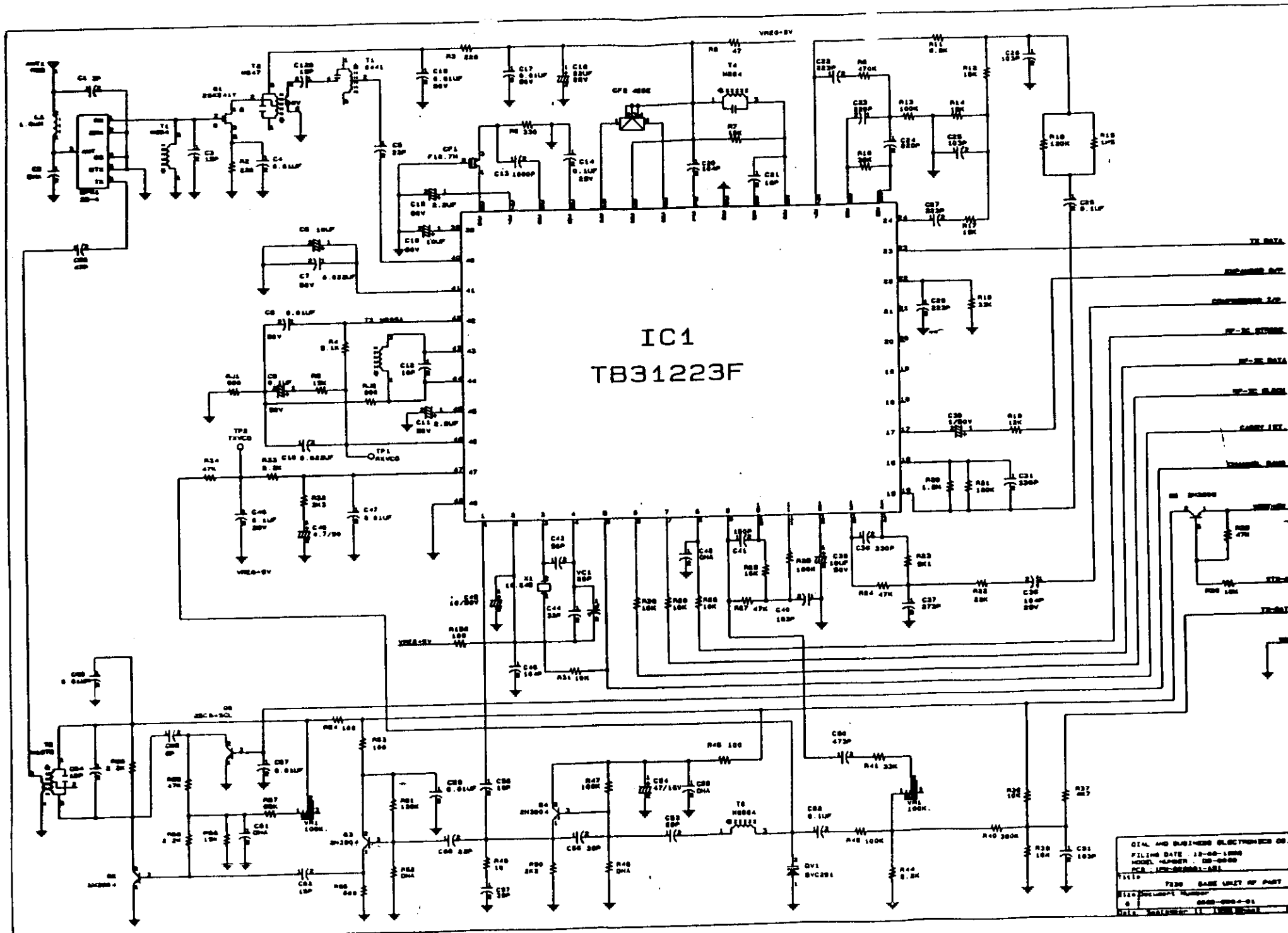
IC1
TB31223F
TX DATA
VREG+5V
TP8
T2VCO
TP1
R1VCO
X1
VC1
VR1
VR2
VR3
QV1
BVC201
T4
T5
T6
CF1
F10.7M
CF2
455E