MB20

Bluetooth Transceiver

Owner's Guide

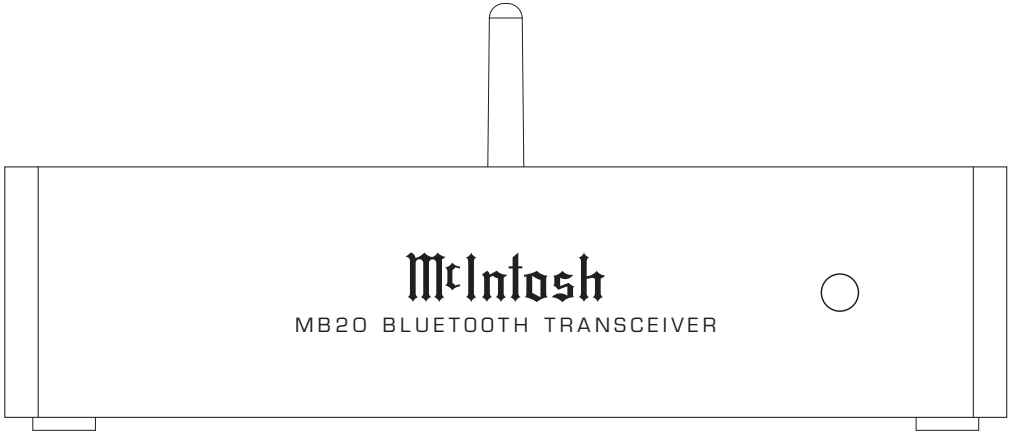

McIntosh Laboratory, Inc. 2 Chambers Street Binghamton, New York 13903-2699 Phone: 607-723-3512 www.mcintoshlabs.com

Safety First

It is a smart idea to read all the enclosed MB20 SAFETY INFORMATION even if you already know this stuff, you can't be too safe.

Here is some compliance information:

FCC Information (US Customers)

1. IMPORTANT NOTICE: DO NOT MODIFY THIS PRODUCT

This product, when installed as indicated in the instructions contained in this manual, meets FCC requirements. Modification not expressly approved by McIntosh may void your authority, granted by the FCC, to use the product.

2. CAUTION:

• To comply with FCC RF exposure compliance requirement, separation distance of at least 20cm must be maintained between this product and all persons.

• This product and its antenna must not be co-located or operating in conjunction with any other antenna or transmitter.

3. COMPLIANCE INFORMATION:

• Product Name: MB20 Bluetooth Transceiver

• Model Number: MB20

McIntosh Laboratory, Inc.
2 Chambers Street
Binghamton, NY 13903
Tel. (607) 723-3512

IC Information (Canadian Customers)

1. PRODUCT:

This device contains license-exempt transmitter(s)/receiver(s) that comply with Innovation, Science and Economic Development Canada's license-exempt RSS(s). Operation is subject to the following two conditions:

1. This device may not cause interference.
2. This device must accept any interference, including interference that may cause undesired operation of the device.

2. CAUTION:

Under Industry Canada regulations, this radio transmitter may only operate using an antenna of a type and maximum (or lesser) gain approved for the transmitter by Industry Canada.

To reduce potential radio interference to other users, the antenna type and its gain should be so chosen that the equivalent isotropically radiated power (e.i.r.p.) is not more than that permitted for successful communication.

This radio transmitter (IC: 2483A-MB20) has been approved by Industry Canada to operate with the antenna types listed below with the maximum permissible gain indicated.

Antenna types not included in this list, having a gain greater than the maximum gain indicated for that type, are strictly prohibited for use with this device.

Antenna used by this product: MB20

Antenna Model: 380B

peak gain: 3dBi

Informations sur IC (pour les clients Canadiens)

L'émetteur/récepteur exempt de licence contenu dans le présent appareil est conforme aux CNR d'Innovation, Sciences et Développement économique Canada applicables aux appareils radio exempts de licence. L'exploitation est autorisée aux deux conditions suivantes :

1. L'appareil ne doit pas produire de brouillage;
2. L'appareil doit accepter tout brouillage radioélectrique subi, même si le brouillage est susceptible d'en compromettre le fonctionnement

RED (EN) Information

1.DECLARATION OF CONFORMITY

Our products follow the provisions of EC/EU directives:

LVD: 2014/35/EC

EMC: 2014/30/EU

RED: 2014/53/EU

ErP: EC regulation 1275/2008 and its frame work directive 2009/125/EC

RoHS: 2011/65/EU

2. IMPORTANT NOTICE: DO NOT MODIFY THIS PRODUCT

This product, when installed as indicated in the instructions contained in this manual, meets RED directive requirements. Modification of the product could result in hazardous Radio and EMC radiation.

3. CAUTION:

Separation distance of at least 20cm must be maintained between this product and all persons.

This product and its antenna must not be co-located or operating in conjunction with any other antenna or transmitter.

Safety Information

WARNING:
Cancer and Reproductive Harm -
www.P65Warnings.ca.gov

1. Read these instructions.
2. Keep these instructions.
3. Heed all warnings.
4. Follow all instructions.
5. Do not use this apparatus near water.
6. Clean only with a dry cloth.
7. Do not use or place near any heat sources such as radiators, heat registers, stoves, or other apparatus that produce heat.
8. Only use attachments/accessories specified by the manufacturer including the supplied AC/DC adapter.
9. Unplug the supplied AC/DC Adapter during lightning storms or when unused for long periods of time.
10. Refer all servicing to qualified service personnel. Servicing is required when the apparatus has been damaged in any way, the AC /DC Adapter is damaged, liquid has been spilled or objects have fallen into the apparatus, the apparatus has been exposed to rain or moisture, does not operate normally, or has been dropped.
11. Do not expose this apparatus to dripping or splashing and that no objects filled with liquids, should not be placed on the equipment.
12. This equipment is supplied with AC/DC Adapter with separate power supply cord or the AC/DC Adapter plugging directly into an a.c. receptacle, they shall remain readily operable. To completely disconnect this equipment from the a.c. mains remove the AC/DC Adapter mains power supply cord from the a.c. receptacle or remove the AC/DC Adapter when it is directly plugged into the a.c. receptacle.
    Working temperature: 0-35° C.

    This product is intended for use only with the adapter provided:
    Manufacturer: GOLDEN PROFIT ELECTRONICS LTD.
    Model: GPE-013B-050240-Z
13. WARNING: Do not expose apparatus to excessive heat such as sunshine, fire or the like. No naked flame sources such as lighted candles should be placed on the apparatus.
    Les piles ne doivent pas être exposées à de forte chaleur, tel qu'à la lumière du soleil, au feu ou autres choses de semblable. Aucune source de flamme nue, tel qu'une bougie, ne doit être placée sur l'appareil.
14. Rating plate is located at bottom enclosure of the apparatus.
    Les marquages sont inscrits en bas de l'appareil.

Statement for Class B digital device acc. to FCC 15.105 as following:

NOTE: This equipment has been tested and found to comply with the limits for a Class B digital device, pursuant to part 15 of the FCC Rules. These limits are designed to provide reasonable protection against harmful interference in a residential installation. This equipment generates, uses and can radiate radio frequency energy and, if not installed and used in accordance with the instructions, may cause harmful interference to radio communications. However, there is no guarantee that interference will not occur in a particular installation. If this equipment does cause harmful interference to radio or television reception, which can be determined by turning the equipment off and on, the user is encouraged to try to correct the interference by one or more of the following measures:

—Reorient or relocate the receiving antenna.
—Increase the separation between the equipment and receiver.
—Connect the equipment into an outlet on a circuit different from that to which the receiver is connected.
—Consult the dealer or an experienced radio/ TV technician for help.
—This device complies with Industry Canada licence-exempt RSS standard(s).
Le présent appareil est conforme aux CNR d'Industrie Canada applicables aux appareils radio exempts de licence.

Table of Contents

Safety First 2
Safety Information 3
Thank you 4
Make a Note 4
Introduction 4
Receiver or Transmitter 5
MB20 Front View 6
Power the MB20 6
MB20 Rear View 7
Attach the Antenna 8
Receiver Mode 9
Clearing and Resetting 10
Packing the MX100 10
License Information 11
Technical Specifications 11

Thank you

From all of us at McIntosh, thank you for purchasing our MB20. The MB20 Bluetooth Transceiver is a precision instrument that will provide many years of enjoyment. Please take a few moments to familiarize yourself with the features and instructions to get the maximum performance from your equipment.

If you need further technical assistance, please contact your dealer who may be more familiar with your particular setup including other brands. You can also contact McIntosh with additional questions or in the unlikely event of needing service.

McIntosh Laboratory, Inc.
2 Chambers Street
Binghamton, New York 13903
Technical Assistance Phone: (607) 723-3512
Customer Service (for repairs)
Phone: (607) 723-3515
Fax: 607-724-1917
support@mcintoshlabs.com
Website: mcintoshlabs.com

Make a Note

For future reference, you can jot down your serial number and purchase information here. We can identify your purchase from this information if the occasion should arise.

Serial Number:	
Purchase Date:	
Dealer Name:	

Introduction

The MB20 functions as a Bluetooth receiver or as a Bluetooth Transmitter. The MB20 has been designed to provide a superior Bluetooth connection to equipment that lacks Bluetooth connectivity. The MB20 is a Class 1 Bluetooth device with a transmission range ten times that of a typical Class 2 Bluetooth device (such as most cell phones.) As a receiver, the MB20 employs an extremely sensitive receiver for better reception even from Class 2

devices.

Class 1 Bluetooth transmission has a range up to ten times that of Class 2 devices. Class 1 operation can typically be 150 feet (45.7 meters) in ideal conditions with mobile devices. Actual range of Bluetooth Class 1 technology may be affected by physical obstacles as well as the performance of devices with which the MB20 is intended to connect, particularly Class 2 devices. Think of this measure as a point of comparison since the world is not always ideal. As a receiver, the maximum range is determined by the capabilities of both paired devices.

Internal sampling and bit shifting, which can be thought of as sophisticated up-sampling, will enable all digital processing to occur and the highest available speed and resolution. The MB20's internal DAC processing at 192 kHz is the gentlest way of filtering the audio signal. The digital output will be at 96 kHz for wider compatibility with other DACs.

Bluetooth Transmit and Receive support aptX HD for improved sound quality. Plus aptX™ Low Latency audio improves end-to-end speed of audio transmission to keep the sound in sync with the screen. Using two MB20, one as a receiver and the other as a transmitter, provides full wireless aptX HD code and decode bridge.

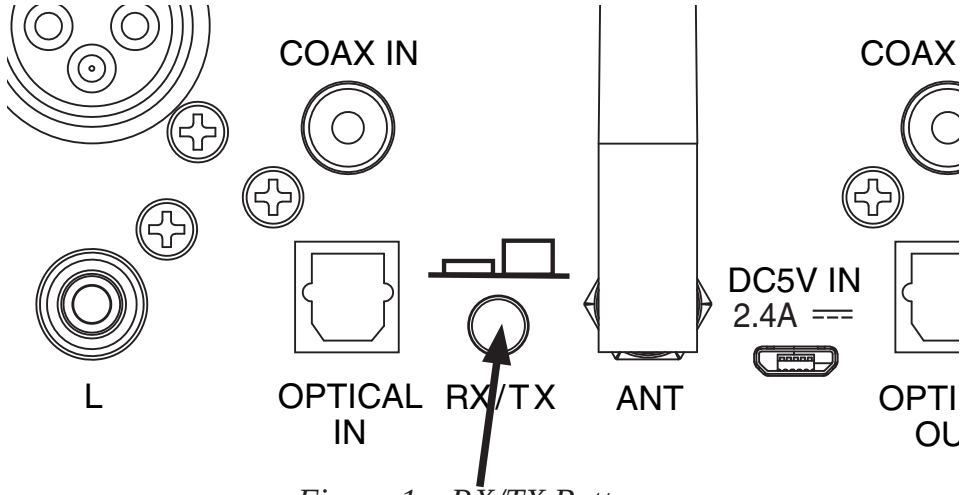

Figure 1– RX/TX Button

Receiver or Transmitter

The MB20 can be either a Receiver (RX) or Transmitter (TX). It can switch between these two modes, but it can only be one of these at a time.

Set the MB20 to the desired mode, either RX or TX, by pushing the RX/TX Button located on the rear of the unit. See Figure 1. When the RX/TX Button is depressed (pushed in), the MB20 is in Receive Mode. When the

button is in the released position, the MB20 is in Transmitter Mode. Pushing the RX/TX button will toggle between these two modes.

RX/TX Button	MB20 Mode
In	Bluetooth Receiver
Out	Bluetooth Transmitter

MB20 Front View

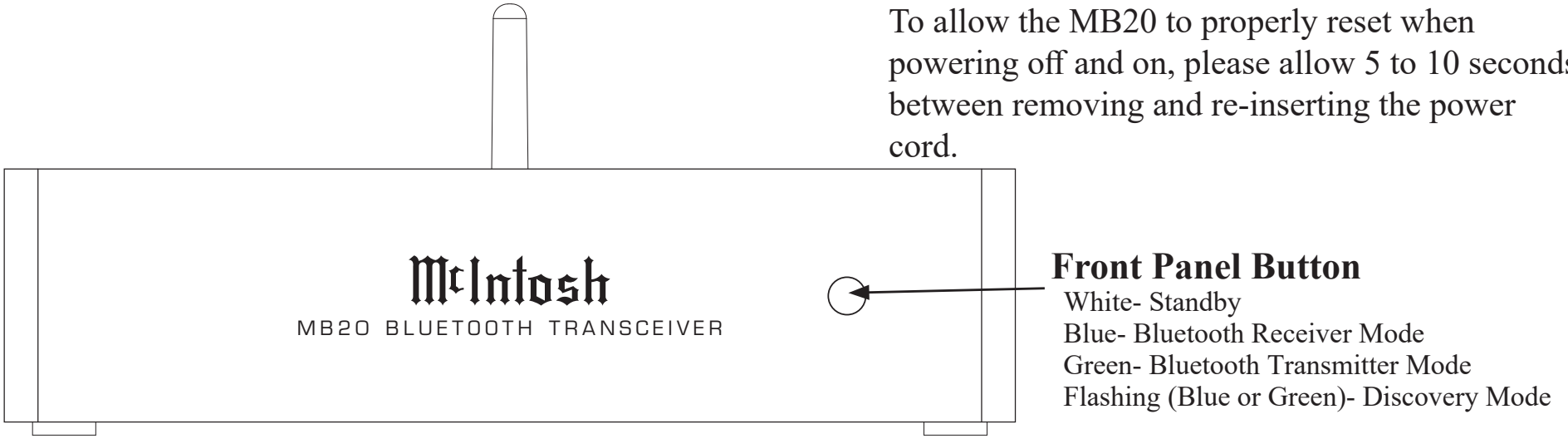

Figure 2– MB20 Front View

Power the MB20

Use the supplied AC/DC adapter with the included USB cable to power the MB20. You may be tempted to plug the USB cable into a computer. This will not supply enough power for the MB20 to function properly.

The DC input labeled DC 5V IN can be found next to the antenna connection in “Figure 3– MB20 Rear View” on page 7.

To allow the MB20 to properly reset when powering off and on, please allow 5 to 10 seconds between removing and re-inserting the power cord.

MB20 Rear View

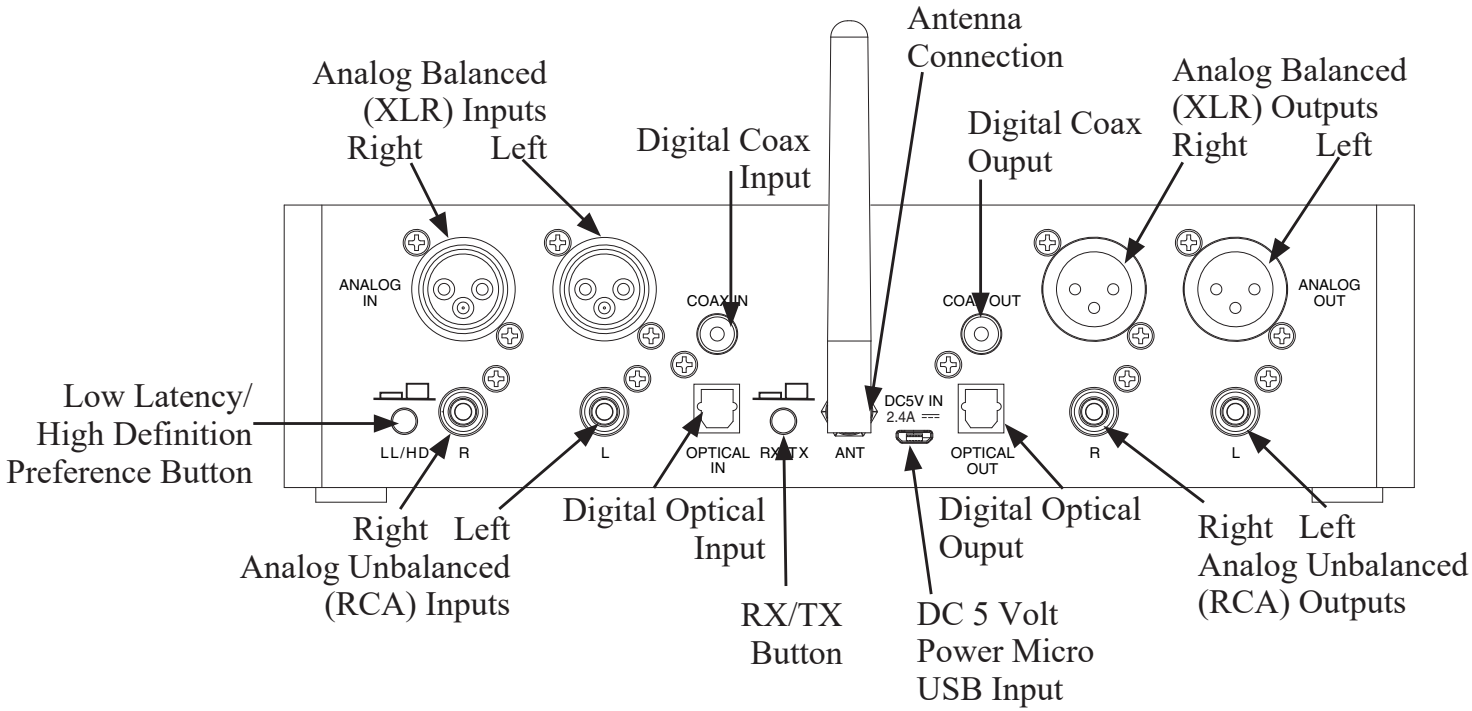

Figure 3– MB20 Rear View

Attach the Antenna

Attach the included Bluetooth Antenna to the ANT Connection in the center of the rear panel of the MB20. (See Figure 3 on page 7.) Tighten the brass nut at the base of the Antenna until finger tight.

Transmitter Mode

In the Transmitter Mode (TX), the MB20 will take a signal from one of the inputs:

- Analog Balanced (XLR)
- Analog Unbalanced (RCA)
- Digital Coax
- Digital Optical

and send (transmit) the signal to a Bluetooth connected device.

The Front Panel Button will glow Green in Transmitter Mode.

To Power On, press and hold the Front Panel Button for two seconds. The MB20 will automatically search for the last paired device. After one minute, the MB20 enters Discovery Mode. It will stay in Discovery Mode for 15 minutes.

The MB20 will pair a previously paired device while in Discovery Mode or pair with a new device that is also in Discovery Mode.

After 15 minutes in Discovery Mode, if no pairing occurs, the MB20 will power off.

If the MB20 has not been previously paired (or the pairing list has been erased), the unit will more quickly (10 seconds) enter Discovery Mode.

Discovery Mode is indicated by a the Front Panel Button flashing green (single blink on and off).

Since you may not be able to see a list of discoverable Bluetooth Devices to choose from on the device you are trying to connect to the MB20, it is helpful to not have any other discoverable devices competing with the MB20 when trying to pair. The process of pairing will happen automatically.

When the MB20 pairs with another device, the Front Panel Button will be solid green (no longer blinking). When connected, the MB20 will send input to the paired

device via Bluetooth.

When powered on, the MB20 will attempt to pair with the last paired device for one minute. If that device is unavailable, the MB20 will enter Discovery Mode.

Low Latency/High Definition Preference Button sets a preference for either Low Latency or High Definition connections when the MB20 is in Transmitter mode. Since a receiver (such as a speaker) may not support both protocols, the MB20 will use the available protocol. If both protocols are available on the receiver this button will set the preference of which to use,

Low Latency may be a desirable preference for video viewing to better sync video and audio.

Button Position	aptX Protocol Preference
In	Low Latency
Out	High Definition

Receiver Mode

In the Receiver Mode (RX), the MB20 will send a received Bluetooth signal to ALL these outputs:

- Analog Balanced (XLR)
- Analog Unbalanced (RCA)
- Digital Coax
- Digital Optical

The Front Panel Button will glow Blue in Receiver Mode.

To pair the MB20 to receive from your device:

- RX/TX Button should be in the receive (RX) position (depressed)
- Power On the MB20. Front Panel Button will glow blue. It will begin to blink (single blink on and off) when in pairing mode
- On the device you wish to connect to the MB20, scan for Available Devices. The MB20 will be listed as “MB20”
- Choose MB20. If asked “Pair with MB20?”, choose OK

- MB20 should be connected for Audio. When successfully paired the Front Panel Button will display as solid blue. Unsuccessful pairing will display as solid white

You can use the Bluetooth menu of your connected device to connect and disconnect the MB20.

Clearing and Resetting

To reset the MB20 and clear the pairing list:

- Press and hold the Front Panel Button for 10 seconds
- The LED of the Front Panel Button will blink, pause and then double blink when reset. Release the Button
- Pull out DC USB Power Connector from the rear of MB20 for 10 seconds and then replace

Packing the MX100

When shipping the MX100, it is highly recommended that the unit be packed as it was originally shipped to avoid damage. For this reason, you may wish to save the original box and packing material for your MB20. If you need any of the packing material, you can contact McIntosh Customer Service. Use only packing material that is in good condition and replace any material that has seen better days.

License Information

Trademark Logo	License Information
Bluetooth®	The Bluetooth® word mark and logos are registered trademarks owned by Bluetooth SIG, Inc. and any use of such marks by McIntosh Group, Inc. is under license. Other trademarks and trade names are those of their respective owners.
Qualcomm® aptX™ HD	Qualcomm® aptX™ is a product of Qualcomm Technologies, Inc. and/or its subsidiaries. Qualcomm is a trademark of Qualcomm Incorporated, registered in the United States and other countries. aptX is a trademark of Qualcomm Technologies International, Ltd., registered in the United States and other countries.

Technical Specifications

Bluetooth Version
Bluetooth 5.0

Supported Protocols
A2DP, SBC, AAC, aptX, aptX Low Latency, aptX HD

Digital Input
up to 192kHz 24-bit

Digital Ouput
96 kHz 24-bit

Analog Input and Output
2.5 Vrms maximum

Dimensions
Width is 9.45 inches (24cm)
antenna adds 1.35 inches (3.43cm)
Depth is 3.94 inches (10.01cm)
Height is 2.375 inches (6.03cm)
with feet 2.5 inches (6.35cm)

Shipping Carton Dimensions
Width is 12 inches (30.48cm)
Depth is 8 inches (20.32cm)
Height is 4 inches (10.16cm)

Weight
2.5 pounds (1.2 kg) net, 3.5 pounds (1.6 kg) in shipping carton

The continuous improvement of its products is the policy of McIntosh Laboratory Incorporated who reserve the right to improve design without notice.
Printed in the U.S.A.

Mcintosh Part Number 24109000 revC