Nemko USA, Inc.
11696 Sorrento Valley Rd., Suite F
San Diego, CA 92121-1024
Phone (858) 755-5525 Fax (858) 452-1810

PART 15.247, SUBPART C

DECLARATION OF CONFORMANCE PROCEDURES
TEST REPORT

For The **Wireless Base Station**

Model: **BS200***
* (see notes on page 6 and 8 of this report)

PREPARED FOR:

HME
14110 Stowe Drive
Poway, CA 92064

PREPARED ON JUNE 7, 2004

REPORT NUMBER 2004 040102 FCC R3

PROJECT NUMBER: 2004 040102 FCC

DOCUMENT HISTORY

REVISION	DATE	COMMENTS	
-	April 29, 2004	Prepared By:	Ricky Hill
-	April 29, 2004	Initial Release:	R. L. Hill
1	June 7, 2004	Revision Release:	R. L. Hill

NOTE: Nemko USA, Inc. hereby makes the following statements so as to conform to Chapter 10 (Test Reports) Requirements of ANSI C63.4 (1992) "Methods and Measurement of Radio-Noise Emissions from Low-Voltage Electrical and Electronic Equipment in the Range of 9 kHz to 40 GHz":

- The unit described in this report was received at Nemko USA, Inc.'s facilities on March 11, 2004. Testing was performed on the unit described in this report on March 11, 2004 to March 16, 2004.
- The Test Results reported herein apply only to the Unit actually tested, and to substantially identical Units.
- This report does not imply the endorsement of the Federal Communications Commission (FCC), NVLAP or any other government agency.

This Report is the property of Nemko USA, Inc., and shall not be reproduced, except in full, without prior written approval of Nemko USA, Inc. However, all ownership rights are hereby returned unconditionally to HME, and approval is hereby granted to HME and its employees and agents to reproduce all or part of this report for any legitimate business purpose without further reference to Nemko USA, Inc.

TABLE OF CONTENTS

DOCUMENT HISTORY **2**

CERTIFICATION **5**

1. ADMINISTRATIVE DATA AND TEST SUMMARY **6**

1.1. ADMINISTRATIVE DATA 6

1.2. TEST SUMMARY 6

2. SYSTEM CONFIGURATION **7**

2.1. SYSTEM COMPONENTS AND POWER CABLES 7

2.2. DEVICE INTERCONNECTION AND I/O CABLES 7

2.3. DESIGN MODIFICATIONS FOR COMPLIANCE 8

2.4. DESIGN MODIFICATIONS FOR COMPLIANCE 8

3. DESCRIPTION OF TEST SITE AND EQUIPMENT **9**

3.1. DESCRIPTION OF TEST SITE 9

4. DESCRIPTION OF TESTING METHODS **10**

4.1. INTRODUCTION 10

4.2. CONFIGURATION AND METHODS OF MEASUREMENTS FOR CONDUCTED EMISSIONS 12

4.3. CONFIGURATION AND METHODS OF MEASUREMENTS FOR FREQUENCY IDENTIFICATION 14

4.4. CONFIGURATION AND METHODS OF MEASUREMENTS FOR RADIATED EMISSIONS 16

4.5. SPREAD SPECTRUM DEVICES 18

5. TEST RESULTS **19**

5.1. CONDUCTED EMISSIONS TEST DATA 19

5.2. RADIATED EMISSIONS TEST DATA 21

5.3. CFR 47 PART 15C §15.247 TEST RESULTS 23

TEST SETUP DIAGRAMS

Figure 1. General EUT Test Setup Diagram 11

Figure 2. Conducted Emissions Test Setup Diagram 13

Figure 3. Frequency ID of Radiated Emissions Test Setup Diagram 15

Figure 4. Radiated Emissions Test Setup Diagram 17

TEST CONFIGURATION PHOTOGRAPHS

Photograph 1. Conducted Emissions Test Configuration 24

Photograph 2. Radiated Emissions Test Configuration 25

APPENDICES

A. CONDUCTED & RADIATED EMISSIONS MEASUREMENT UNCERTAINTIES..... 26

B. NEMKO USA, INC.'S TEST EQUIPMENT & FACILITIES CALIBRATION PROGRAM 28

C. FCC AND NVLAP ACCREDITATION..... 30

CERTIFICATION

Nemko USA, Inc., an independent Electromagnetic Compatibility (EMC) Test Laboratory, produced this Test Report and performed the Radio Frequency Interference (RFI) testing and data evaluation contained herein.

Nemko USA, Inc.'s measurement facility is currently registered with the United States Federal Communications Commission (FCC) in accordance with the provisions of 47 United States Code (CFR) Part 2, Subpart I, Section 2.948(a). A current description of Nemko USA, Inc.'s measurement facility is on file with the FCC. Nemko USA Inc. has additionally satisfied the FCC that it complies with the requirements set forth in 47 CFR Part 2, Subpart I, Section 2.948(d) regarding the accreditation of EMC laboratories.

The RFI testing, test data collection and test data evaluation were accomplished in accordance with the ANSI C63.4-1992 Standard, and in accordance with the applicable sections of the FCC rules (47 CFR Parts 2 and 15). The testing was also accomplished in accordance with Industry Canada's ICES-003 standard for unintentional radiating device per EMCAB-3, Issue 3 (May 1998). The administrative summary of this test report provides a description of the test sample.

I hereby certify that the test data, test data evaluation, and equipment configurations used to compile this test report are a true and accurate representation of the test sample's radio frequency interference characteristics as of the test date(s), and, for the design of the test sample.

Ricky L. Hill
Manager of EMC Operations

1. ADMINISTRATIVE DATA AND TEST SUMMARY

1.1. Administrative Data

CLIENT: HME
14110 Stowe Drive
Poway, CA 92064
858-535-6098
858-535-6019- fax

CONTACT: Thomas Riches

DATE (S) OF TEST: March 11, 2004 to March 16, 2004

EQUIPMENT UNDER TEST (EUT): Wireless Base Station

Model BS200

Condition Upon Receipt Suitable for Test

TEST SPECIFICATION: FCC, Part 15.247, Subpart C, Output power and spurious emission only. The EUT packaging has been changed but the transmitter remains identical to originally qualified part.

1.2. Test Summary

Specification	*Frequency Range*	*Compliance Status*
FCC, CFR 47, Section 15.207	0.15 MHz - 30.00 MHz	PASS
FCC, CFR 47, Section 15.209	30 MHz – 10th Harmonic	PASS
FCC CFR 47, §15.247 Spread Spectrum Device Measurements	2400 - 2483.5 MHz	PASS

Test Supervisor: _____
R. L. Hill, Nemko USA, Inc.

Refer to the test results section for further details.

2.SYSTEM CONFIGURATION

2.1. System Components and Power Cables

DEVICE	MANUFACTURER MODEL # SERIAL #	POWER CABLE
EUT - Wireless Base Station	HME BS200 15E00778	1.5m, unshielded, 18AWG, 2 wire, threaded DC jack
EUT Power Supply	SUNNY SYS1097-4812 0311007301	2m, unshielded, 18AWG, 3 wire, IEC
Support Equipment	HME BS200 15E00774	N/A

2.2. Device Interconnection and I/O Cables

CONNECTION	I/O CABLE
EUT to Headset	1.5m, PS/2 Headset cable, hardwired
EUT Two Wire to Support Unit	5m, shielded, 3 wire XLR cable
EUT Aux In to Support Unit	11m, shielded, 3 wire XLR cable
EUT Aux Out to Support Unit	11m, shielded, 3 wire XLR cable
EUT 4 wire to Support Unit	5m, unshielded, RJ45 (crossover)

2.3. Test Configuration

The BS200 is a Wireless Base Station. Its function is to provide high quality wireless communications among multiple users wearing the associated belt pack/headsets. The EUT was exercised by transmitting audio signals over the base station headset. It was monitored by listening to the audio quality on a receiving headset. If the EUT audio became unreadable or ceased without recovery during Immunity testing that would be considered a failure. The BS200 was previously approved using a different model number and different configuration. The Wireless transmitter has remained the same so this testing is to confirm continued compliance with FCC part 15.247 spurious emissions and FCC part 15.207 and 209. Previous report is included in package. The EUT is a prototype and all ports which will be populated in the final design were loaded during the evaluation.

2.4. Design Modifications for Compliance

Device: **Wireless Base Station**
Model: **BS200**

The following design modifications were made to the EUT during testing.

No design modifications were made to the EUT during testing.

3. DESCRIPTION OF TEST SITE AND EQUIPMENT

3.1. Description of Test Site

The test site is located at 11696 Sorrento Valley Road, Suite F, San Diego, CA 92121. The site is physically located 18 miles Northwest of downtown San Diego. The general area is a valley 1.5 miles east of the Pacific Ocean. This particular part of the valley tends to minimize ambient levels, i.e. radio and TV broadcast stations and land mobile communications. The three and ten-meter Open Area Test Site (OATS) is located behind the office/lab building. It conforms to the normalized site attenuation limits and construction specifications as set in the EN 55022 (1987), CISPR 16 and 22 (1985) and ANSI C63.4-1992 documents. The OATS normalized site attenuation characteristics are verified for compliance every year.

4. DESCRIPTION OF TESTING METHODS

4.1. Introduction

As required in 47 CFR, Parts 2 and 15, the methods employed to test the radiated and conducted emissions (as applicable) of the EUT are those contained within the American National Standards Institute (ANSI) document C63.4-1992, titled "Methods of Measurement of Radio-Noise Emissions from Low-Voltage Electrical and Electronic Equipment in the Range of 9 kHz to 40 GHz." All applicable FCC Rule Sections that provide further guidance for performance of such testing are also observed.

For General Test Configuration please refer to Figure 1 on the following page.

Digital devices sold in Canada are required to comply with the Interference Causing Equipment Standard for Digital Apparatus, ICES-003. These test methods and limits are specified in the Canadian Standards Association's (CSA) Standard C108.8-M1983 (1-1-94 version) and are "essentially equivalent" with FCC, Part 15 and CISPR 22 (EN55022) rules for unintentional radiators per EMCAB-3, Issue 3 (May 1998). No further testing is required for compliance to ICES-003.

Figure 1. General EUT Test Setup Diagram

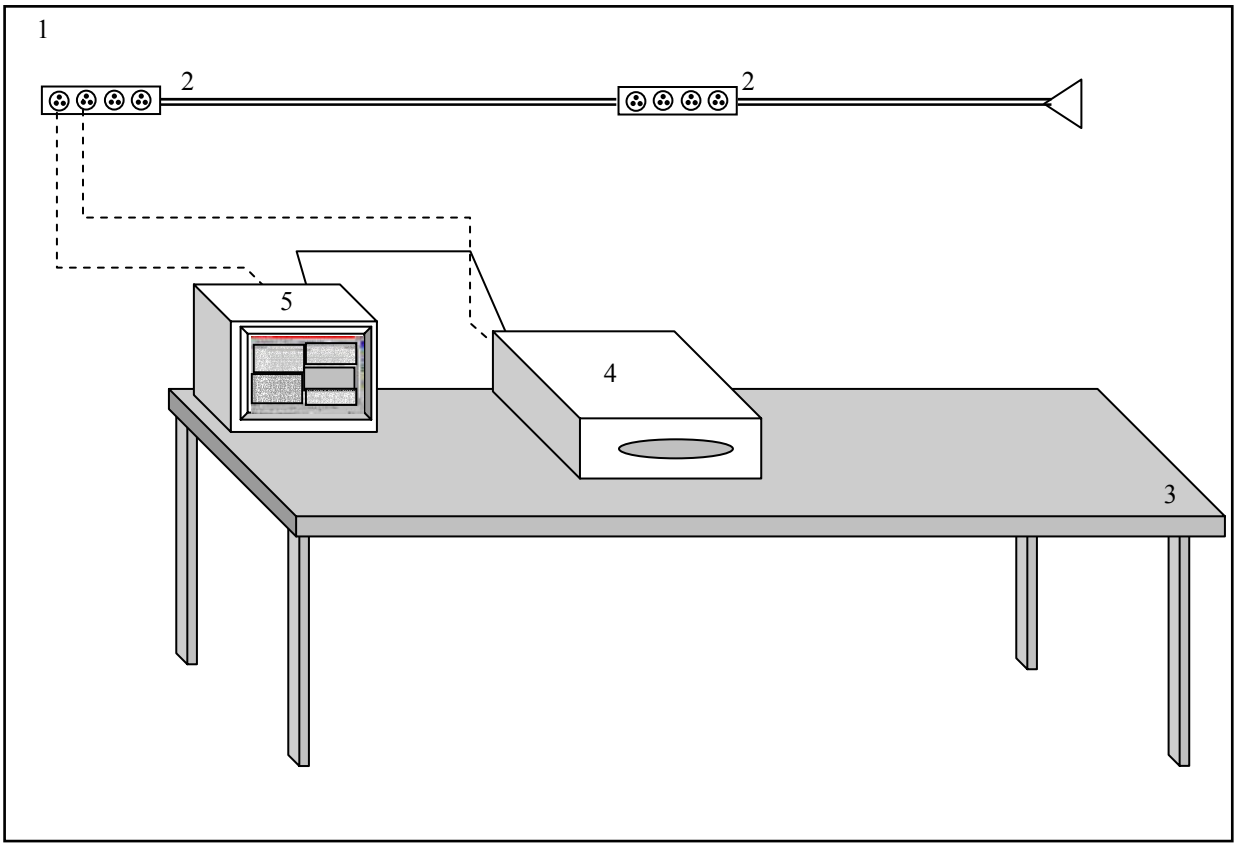

NOT TO SCALE

CONFIGURATION LEGEND

1. Test Laboratory
2. AC Power for Peripheral Devices (120V, 60 cycles, single phase)
3. Non-Conducting tables 80 cm above ground plane
4. EUT: Wireless Base Station

4.2. Configuration and Methods of Measurements for Conducted Emissions

Section 7 of ANSI C63.4 determines the general configuration of the EUT and associated equipment, as well as the test platform for conducted emissions testing. Tabletop devices are placed on a non-conducting surface 80 centimeters above the ground plane floor and 40 centimeters from the ground plane wall. The EUT and associated system are configured to operate continuously, representing a "normally operating" mode. The EUT is powered via a Line Impedance Stabilization Network (LISN). The emissions are recorded using the required bandwidth of 9 kHz in the quasi-peak mode. The average amplitude is also observed employing a 10 kHz bandwidth to determine the presence of broadband RFI. When such interference is caused by broadband sources (as defined by the FCC and ANSI Rules), the deviation guidelines contained in Section 11.3.1 of ANSI C63.4 are employed, which allows a correction factor of 13 dB to be subtracted from the quasi-peak reading. The emission levels are then compared to the applicable FCC limits to determine compliance.

For Conducted Emissions Test Configuration please refer to Figure 2 on the following page.

Figure 2. Conducted Emissions Test Setup Diagram

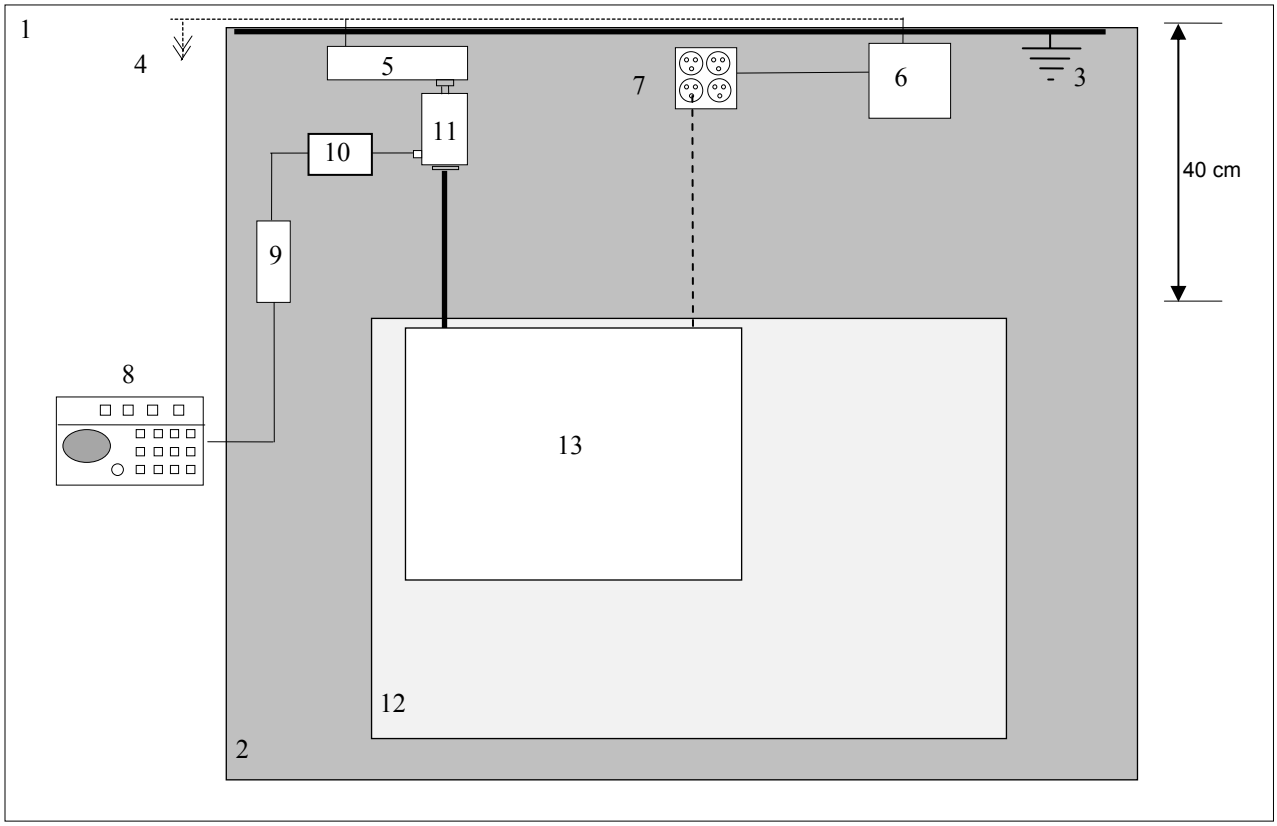

NOT TO SCALE

CONFIGURATION LEGEND

1. Test Laboratory (6 X 6 meters)
2. Ground Plane (15 square meters)
3. Vertical Conducting Wall (Grounded through Ground Plane via 10' ground rod)
4. AC Power for Devices
5. Power Line Filter, Lindgren, 120 dB, 30 amp
6. Line Impedance Stabilization Network (LISN) for peripheral devices
7. Power Distribution Box for peripheral devices
8. Spectrum Analyzer with Quasi-Peak Adapter
9. High Pass Filter
10. Transient Limiter
11. LISN for EUT
12. Non-Conducting table 80 cm above ground plane
13. EUT: Wireless Base Station and Associated System

4.3. Configuration and Methods of Measurements for Frequency Identification

When performing all testing of equipment, the actual emissions of the EUT are segregated from ambient signals present within the laboratory or the open-field test range. Preliminary testing is performed to ensure that ambient signals are sufficiently low to allow for proper observation of the emissions from the EUT. Incoming power lines are filtered using a 120 dB, 30-ampere; 115/208-volt filter to assist in reducing ambient signals for tests of levels of conducted emissions. Ambients within the laboratory are compared to those noted at the nearby open-field site to discriminate between signals produced from the EUT and ambient signals. In the event that a significant emission is produced by the EUT at a frequency which is also demonstrating significant ambient signals, the spectrum analyzer is placed in the peak mode, the bandwidth is narrowed, the EUT's signal is centered on the analyzer, the scan width is expanded to 50 kHz while monitoring the audio to ensure that only the EUT signal is present, the analyzer is switched to quasi-peak mode, and the level of the EUT signal is recorded.

For Frequency ID Test Configuration please refer to Figure 3 on the following page.

Figure 3. Frequency ID of Radiated Emissions Test Setup Diagram

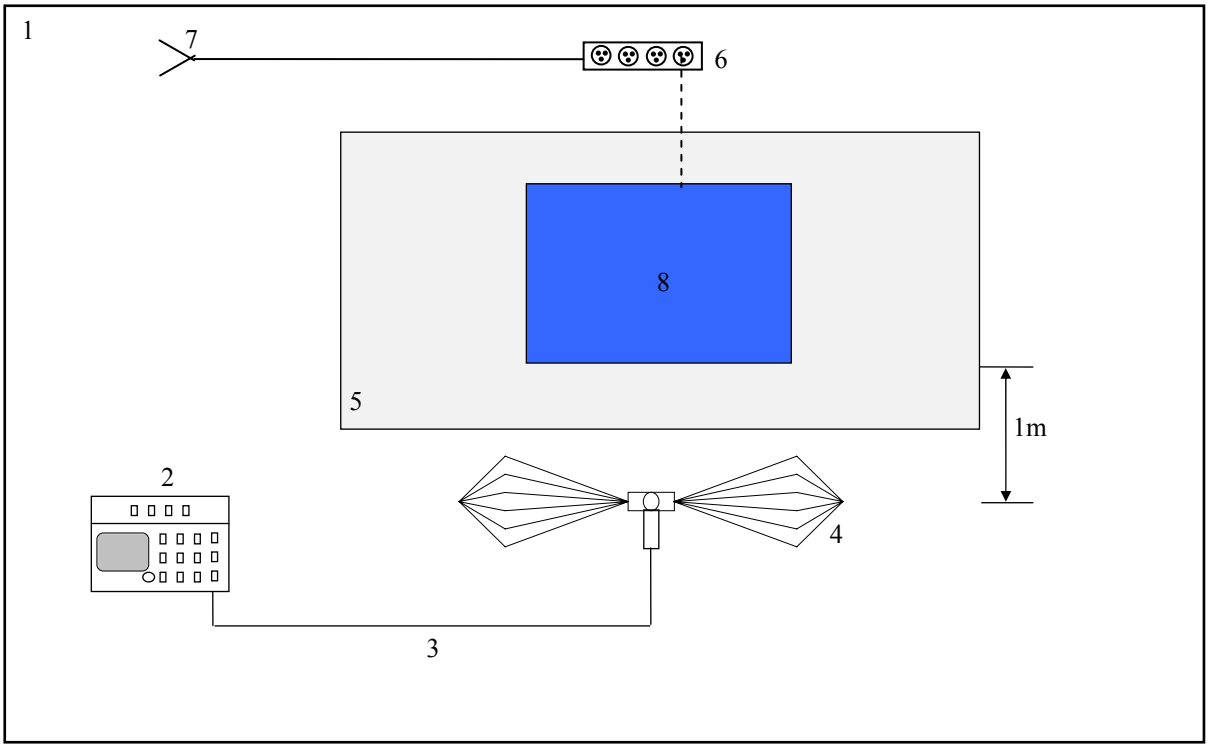

NOT TO SCALE

CONFIGURATION LEGEND

1. Test Laboratory
2. Spectrum Analyzer with Quasi-Peak Adapter
3. Coax interconnect from Antenna to Spectrum Analyzer
4. Receive Antenna (basic relative position)
5. Non-Conducting table 80 cm above ground plane
6. Power strip for EUT and peripherals
7. AC power for devices
8. EUT Wireless Base Station and Associated System

4.4. Configuration and Methods of Measurements for Radiated Emissions

Section 8 of ANSI C63.4 determines the general configuration and procedures for measuring the radiated emissions of equipment under test. Initially, the primary emission frequencies are identified inside the test lab by positioning a broadband receive antenna one meter from the EUT to locate frequencies of significant radiation. Next, the EUT and associated system are placed on a turntable on a ten meter open area test site (registered with the FCC in accord with its Rules and ANSI C63.4) and the receive antenna is located at a distance of ten meters from the EUT.

The EUT and associated system are configured to operate continuously, representing a "normally operating" mode. All significant radiated emissions are recorded when maximum radiation on each frequency is observed, in accordance with part 8 of ANSI C63.4-1992 and Section 15.33 of the FCC Rules. To ensure that the maximum emission at each discrete frequency of interest is observed, the receive antenna is varied in height from one to four meters and rotated to horizontal and vertical polarities, and the turntable is also rotated to determine the worst emitting configuration. The numerical results of the test are included herein to demonstrate compliance.

The numerical results that are applied to the emissions limits are arrived at by the following method:
Example: A=RR+CL+AF
A = Amplitude dBuV/M
RR = Receiver Reading dBuV
CL = cable loss dB
AF = antenna factor dBm-1

Example Frequency = 110MHz
18.5 dBuV (spectrum analyzer reading)
+3.0 dB (cable loss @ frequency)
21.5 dBuV
+15.4 dBm-1 (antenna factor @ frequency)
36.9 dBuV/M Final adjusted value

The final adjusted value is then compared to the appropriate emission limit to determine compliance.

For Radiated Emissions Test Configuration please refer to Figure 4 on the following page.

Figure 4. Radiated Emissions Test Setup Diagram

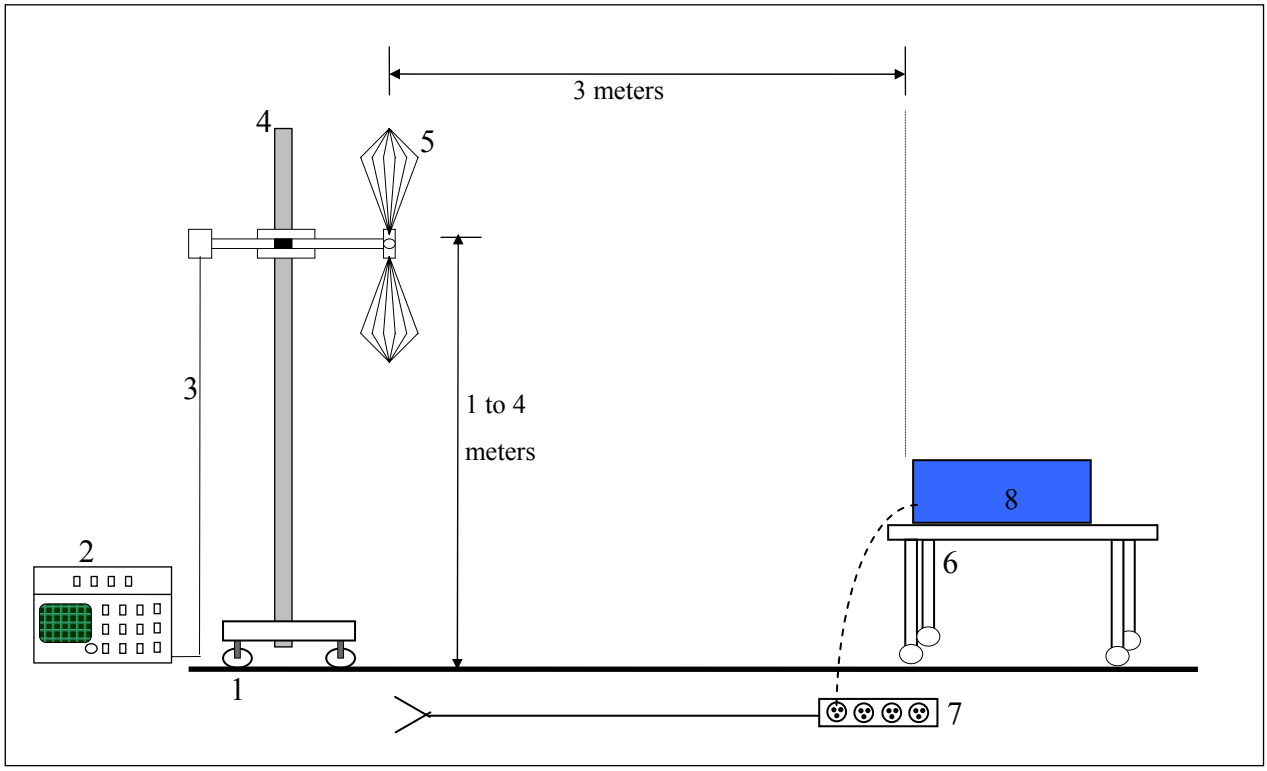

NOT TO SCALE

CONFIGURATION LEGEND

1. Ground plane (11 X 17 meters)
2. Spectrum Analyzer with Quasi-Peak Adapter
3. Coax interconnect from Receive Antenna to Spectrum Analyzer
4. Antenna Mast with motorized mounting assembly
5. Receive Antenna (basic relative position)
6. Non-Conducting table 80 cm above ground plane
7. AC power for devices
8. EUT: Wireless Base Stationand Associated System

4.5. Spread Spectrum Devices

In Addition to the general radiated emissions requirements described in FCC, Part 15b, for Spread Spectrum devices,

Section 15.247 determines the configuration and procedures for measuring additional emissions of Intentional Radiating Devices. In the case of these devices, conducted emissions are measured at the EUT output terminals with the correct resistance, impedance and output signal limit values.

5. TEST RESULTS

5.1. Conducted Emissions Test Data

Client	HME	Temperature	71	deg F
PAN #	24-102-HME-R1	Relative Humidity	49	%
EUT Name	Wireless Base Station	Barometric Pressure	30.2	Hg
EUT Model	BS200	Test Location	Enclosure 1	
Governing Doc	CFR 47, Part 15B	Test Engineer	Mike Krumweide	
Basic Standard	Sec. 15.207	Date	3/11/04	

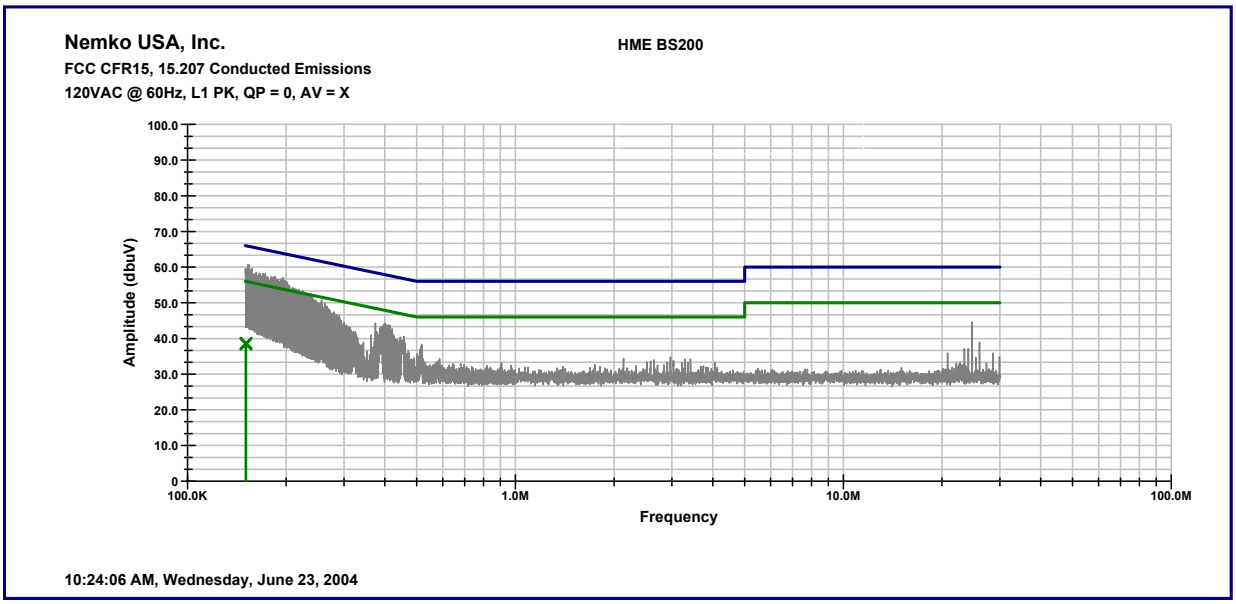

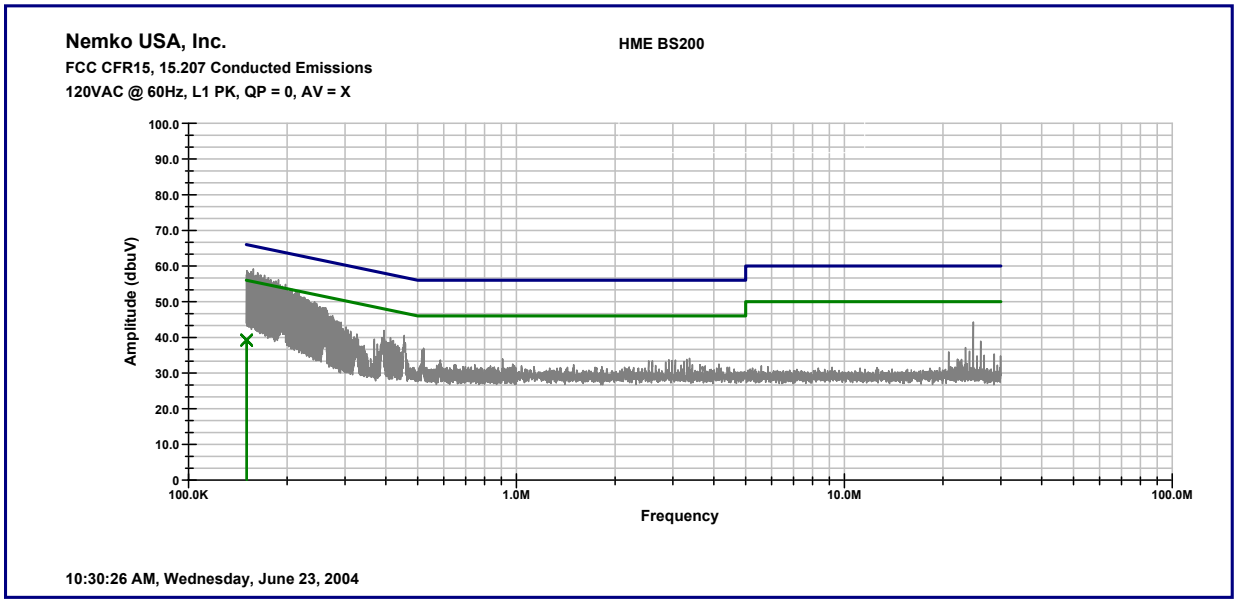

Conducted Emissions Test Equipment

Client	HME	EUT Name	Wireless Base Station
PAN #	24-102-HME-R1	EUT Model	BS200

Device Type	*Model #*	*Asset #*	*Used*	*Cal Done*	*Cal Due*
Pre-Amplifier					
Amplifier, HP	8447A	342			
Amplifier, HP	8447F	242			
Amplifier, HP	8447A	166			
Amplifier, HP	8447A	603			
Filter / Limiter					
High Pass Filter, Solar	7801-5.0	564	X	12/9/03	12/9/04
Transient Limiter, HP	11947A	682	X	8/6/03	8/6/04
Transducer					
LISN, EMCO	3825/2 – FCC	147			
LISN, Electro-Metrics	LISN – VDE	425			
V-Network LISN, Solar	9348-50-R-24-BNC	384			
V-Network LISN, Solar	9348-50-R-24-BNC	395	X	9/16/03	9/16/04
Voltage Line Probe, EMCO	3701	471			
LISN, Solar	8602-50-TS-50-N	424			
LISN, Solar	8602-50-TS-50-N	423			
Spectrum Analyzer / Receiver					
Quasi-Peak Adapter, HP Spectrum Analyzer Display, HP Spectrum Analyzer, HP	85650A 85662A 8566B	533 404 104			
RF Preselector, HP	85650A	673			
Quasi-Peak Adapter, HP Spectrum Analyzer Display, HP Spectrum Analyzer, HP	85650A 85662A 8568B	438 107 422			
Quasi-Peak Adapter, HP Spectrum Analyzer Display, HP Spectrum Analyzer, HP	85650A 85662A 8568B	421 422 535	X	10/21/03	4/21/04
Quasi-Peak Adapter, HP Spectrum Analyzer Display, HP Spectrum Analyzer, HP	85650A 85662A 8568B	421 534 535			
Quasi-Peak Adapter, HP Spectrum Analyzer Display, HP Spectrum Analyzer, HP	85650A 85662A 8568B	538 537 711			
RF Preselector, HP	85685A	403			
Spectrum Analyzer, Advantest	R3261	523			

5.2. Radiated Emissions Test Data

NEMKO USA, Inc.

San Diego Headquarters:
11696 Sorrento Valley Rd.
San Diego, CA 92121
Tel: (858) 755-5525
Fax: (858) 452-1810

Radiated Emissions Data

Complete _____ Job # : 24-102-HME-R Test # : _____
Preliminary _____ Page 1 of 2

Client Name : HM Electronics
EUT Name : Wireless Base Station
EUT Model # : BS200
EUT Part # :
EUT Serial # :
EUT Config. : Continuous Transmit

Specification : CFR47 Part 15, Subpart B, Class B Reference :

Rod. Ant. #:	NA	Temp. (deg. C) :	72	Date :	3/11/2004
Bicon Ant.#:	116	Humidity (%) :	55	Time :	
Log Ant.#:	110	EUT Voltage :	120	Staff :	MK
DRG Ant. #	NA	EUT Frequency :	60	Photo ID:	
Dipole Ant.#:	NA	Phase:	1	Peak Bandwidth:	100 kHz
Cable#:	SOATS2	Location:	SOATS	Video Bandwidth	100 kHz
Preamp#:	827	Distance:	3		
Spec An.#:	107				
QP #:	438				
PreSelect#:	NA				

Meas. Freq. (MHz)	Ant. Pol. (H/V)	Atten. (dB)	Meter Reading (dBuV)	Antenna Factor (dB)	Path Loss (dB)	RF Gain (dB)	Corrected Reading (dBuV/m)	Spec. limit (dBuV/m)	CR/SL Diff. (dB)	Pass Fail Unc.	Comment
37.78	v	0	50.1	17.5	1.1	32.6	36.1	39.1	-3.0	Pass	
68.38	v	0	49.8	7.7	1.5	32.4	26.6	39.1	-12.5	Pass	
121.3	v	0	40.8	13.6	1.8	32.6	23.6	43.5	-19.9	Pass	
122	v	0	43.4	13.6	1.8	32.6	26.2	43.5	-17.3	Pass	
200.01	v	0	45.2	11.6	1.8	32.7	25.9	43.5	-17.6	Pass	
211.9	v	0	43.4	11.2	1.8	32.7	23.7	43.5	-19.8	Pass	
640.08	v	0	42.6	19.7	2.9	32.6	32.6	46.4	-13.8	Pass	

Radiated Emissions Test Equipment

Client	HME	EUT Name	Wireless Base Station
PAN #	24-102-HME-R1	EUT Model	BS200

Device Type	*Model #*	*Asset #*	*Used*	*Cal Done*	*Cal Due*
Pre-Amplifier					
Amplifier, HP	8447A	342			
Amplifier, Mini-Circuits	ZHL-1042J	819			
Amplifier, HP	8447A	166			
Amplifier, HP	8447A	603			
Amplifier, HP	8449A	317			
Amplifier, Mini-Circuits	ZHL-1042J	630			
Amplifier, Mini-Circuits	ZHL-2	635	X	3/3/04	3/3/05
Antenna OATS #1 (North)					
Antenna, Biconical	3110	116	X	6/22/03	6/22/04
Antenna, Log Periodic	3146	110	X	7/21/03	7/21/04
Antenna, Ridged Guide	3115	752			
Antenna, Loop	ALR-25M				
Antenna OATS #1 (South)					
Antenna, Biconical	EMCO				
Antenna, Log Periodic					
Antenna, Ridged Guide	3115				
Antenna, Loop	ALR-25M				
Spectrum Analyzer / Receiver					
Quasi-Peak Adapter, HP Spectrum Analyzer Display, HP Spectrum Analyzer, HP	85650A 85662A 8566B	533 404 104			
RF Preselector, HP	85650A	673			
Quasi-Peak Adapter, HP Spectrum Analyzer Display, HP Spectrum Analyzer, HP	85650A 85662A 8568B	438 534 107	X X X	9/10/03 9/25/03 9/25/03	3/10/04 3/25/04 3/25/04
Quasi-Peak Adapter, HP Spectrum Analyzer Display, HP Spectrum Analyzer, HP	85650A 85662A 8568B	676 675 674			
Quasi-Peak Adapter, HP Spectrum Analyzer Display, HP Spectrum Analyzer, HP	85650A 85662A 8568B	421 534 535			
Quasi-Peak Adapter, HP Spectrum Analyzer Display, HP Spectrum Analyzer, HP	85650A 85662A 8568B	538 537 711			
RF Preselector, HP	85685A	403			
Spectrum Analyzer, Advantest	R3261	523			

5.3. CFR 47 Part 15c §15.247 Test Results

NEMKO USA, Inc.

San Diego Headquarters:
11696 Sorrento Valley Rd.
San Diego, CA 92121
Tel: (858) 755-5525
Fax: (858) 452-1810

Radiated Emissions Data

Complete: x
Preliminary:

Job # : 24-102-HME-R Test # :
Page 1 of 1

Client Name : HM Electronics
EUT Name : Wireless Base Station
EUT Model # : BS200
EUT Part # :
EUT Serial # :
EUT Config. : Continuous Transmit

Specification : Part 15:247C, Part 15:209 in restricted band
Reference :

Rod. Ant. #:	NA	Temp. (deg. C) :	72	Date :	3/11/2004
Bicon Ant.#:		Humidity (%) :	55	Time :	
Log Ant.#:		EUT Voltage :	120	Staff :	MK
DRG Ant. #	752	EUT Frequency :	60	Photo ID:	
Dipole Ant.#:	NA	Phase:	1	Peak Bandwidth:	1 MHz
Cable#:	HIFREQ	Location:	SOATS	Video Bandwidth	1 MHz
Preamp#:	NA	Distance:	3 and 1 m		
Spec An.#:	107				
QP #:	438				
PreSelect#:	NA				

Meas. Freq. (MHz)	Ant. Pol. (H/V)	Atten. (dB)	Meter Reading (dBuV)	Antenna Factor (dB)	Path Loss (dB)	RF Gain (dB)	Corrected Reading (dBuV/m)	Spec. limit (dBuV/m)	CR/SL Diff. (dB)	Pass Fail Unc.	Comment
2401.9	v	0	82.3	28.6	3.0	0.0	113.9	115.0	-1.1	Pass	Low in Band 3m
2441.6	v	0	80.5	28.6	3.0	0.0	112.1	115.0	-2.9	Pass	Mid in Band 3m
2481.3	v	0	78.5	28.6	3.0	0.0	110.1	115.0	-4.9	Pass	High in Band 3m
4803.6	v	0	9.6	32.8	5.8	0.0	48.2	54.0	-5.8	Pass	Restricted Band 1m
4883.1	v	0	12	32.8	5.8	0.0	50.6	54.0	-3.4	Pass	Restricted Band 1m
4962.6	v	0	14.7	32.8	5.8	0.0	53.3	54.0	-0.7	Pass	Restricted Band 1m

Testing was completed to the 10th harmonic. No harmonics other than noted above.

BANDEDGE MEASUREMENT

Frequency (MHz)	Max Amplitude (2481.3 MHz)	Delta Marker (dB)	Limit (dBµV/m)	Margin (dB)
2483.5 (PK)	110.1dBµV/m	62.5 dB	74	47.6
2483.5 (Ave)	107.3dBµV/m	62.5 dB	54	44.8

NOTE: Measurements were taken as follows: (per FCC Bandedge method)

1. Measured transmitter frequency at 2481.3 for both PEAK - RBW/VBW of 1MHz/1MHz and Average – RBW/VBW of 1MHz/10Hz
2. Reduced span to view the transmit signal and bandedge with a RBW/VBW of 30kHz – giving the Delta between the fundamental and bandedge
3. Values taken were then calculated to formulate final results (all correction factors are incorporated into the values given above.
4. All measurements were taken with the hopping turned off and without the signal pulsing. This represents worst possible case.

Photograph 1. Conducted Emissions Test Configuration

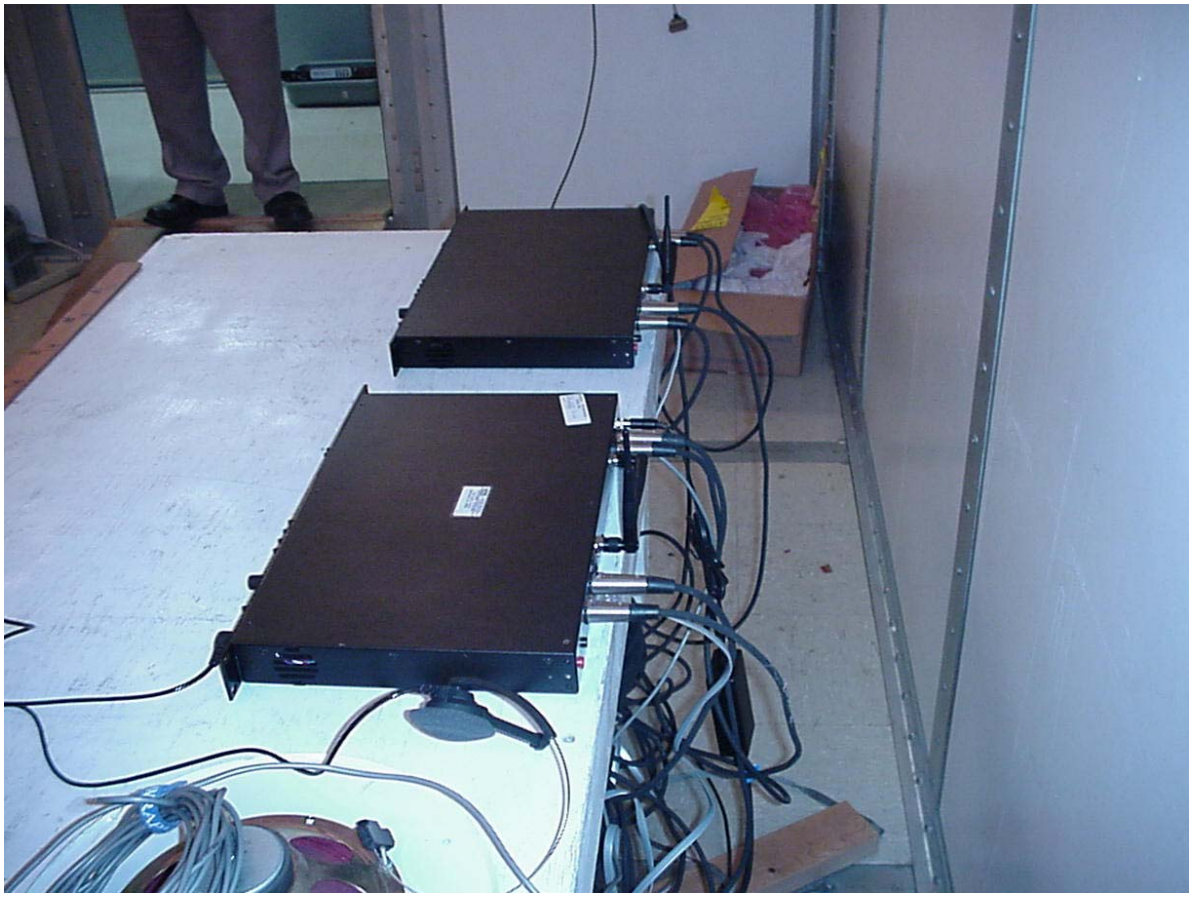

1. EUT: Wireless Base Station
2. Line Impedance Stabilization Network (LISN) for EUT

Photograph 2. Radiated Emissions Test Configuration

1. EUT: Wireless Base Statio

1. Double Ridged Guide Antenna
2. EUT: Wireless Base Station

APPENDIX A
A. Conducted & Radiated Emissions Measurement Uncertainties

1. Introduction

ISO Standard 17025 and ANSI/NCSL Z540-1(1994) require that all measurements contained in a test report be "traceable". "Traceability" is defined in the *International Vocabulary of Basic and General Terms in Metrology* (ISO: 1993) as: "the property of the result of a measurement... whereby it can be related to stated references, usually national or international standards, through an unbroken chain of comparisons, *all having stated uncertainties*".

The purposes of this Appendix are to "state the *Measurement Uncertainties*" of the conducted emissions and radiated emissions measurements contained in Section 5 of this Test Report, and to provide a practical explanation of the meaning of these measurement uncertainties.

2. Statement of the Worst-Case Measurement Uncertainties for the Conducted and Radiated Emissions Measurements Contained in This Test Report

Table 1: Worst-Case Expanded Uncertainty "U" of Measurement for a k=2 Coverage Factor

Conducted Emissions Measurement Detection Systems	Applicable Frequency Range	"U" for a k=2 Coverage Factor
HP8568B Spectrum Analyzer with QPA and HP8447F Preamplifier	150 kHz - 30 MHz	+/- 3.0 dB
HP8566B Spectrum Analyzer with QPA and Preselector	9 kHz - 30 MHz	+/- 2.9 dB
Radiated Emissions Measurement Detection Systems	**Applicable Frequency Range**	**"U" for a k=2 Coverage Factor**
HP8568B Spectrum Analyzer with QPA & HP8447F Preamplifier	30 MHz - 200 MHz	+4.0 dB, -4.1 dB
HP8568B Spectrum Analyzer with QPA & HP8447F Preamplifier	200 MHz-1000 MHz	+/- 3.5 dB
HP8566B Spectrum Analyzer with QPA & Preselector	30 MHz - 200 MHz	+3.9 dB, -4.0 dB
HP8566B Spectrum Analyzer with QPA & Preselector	200 MHz-1000 MHz	+/- 3.4 dB
HP8566B Spectrum Analyzer with QPA & HP 8449A Preamplifier	1 GHz - 18 GHz	+2.5 dB, -2.6 dB
HP8566B Spectrum Analyzer with QPA & HP8449A Preamplifier	18 GHz - 40 GHz	+/- 3.4 dB

NOTES:
1. Applies to 3 and 10 meter measurement distances
2. Applies to all valid combinations of Transducers (i.e. LISNs, Line Voltage Probes, and Antennas, as appropriate)
3. Excludes the Repeatability of the EUT

3. Practical Explanation of the Meaning of the Conducted and Radiated Emissions Measurement Uncertainties

In general, a "Statement of Measurement Uncertainty" means that with a certain (specified) confidence level, the "true" value of a measurand will be between a (stated) upper bound and a (stated) lower bound.

In the specific case of EMC Measurements in this test report, the measurement uncertainties of the conducted emissions measurements and the radiated emissions measurements have been calculated in accordance with the method detailed in the following documents:

- *ISO Guide to the Expression of Uncertainty in Measurement* (ISO, 1993)
- NIS 81:1994, *The Treatment of Uncertainty in EMC Measurements* (NAMAS, 1994)
- NIST Technical Note 1297(1994), *Guidelines for Evaluating and Expressing the Uncertainty of NIST Measurement Results* (NIST, 1994)

The calculation method used in these documents requires that the stated uncertainty of the measurements be expressed as *an "expanded uncertainty", U, with a k=2 coverage factor*. The practical interpretation of this method of expressing measurement uncertainty is shown in the following example:

EXAMPLE: Assume that at 39.51 MHz, the (measured) radiated emissions level was equal to +26.5 dBuV/m, and that the +/- 2 standard deviations (i.e. 95% confidence level) measurement uncertainty was +/- 3.4 dB.

In the example above, the phrase "k = 2 Coverage Factor" simply means that the measurement uncertainty is stated to cover +/-2 standard deviations (i.e. a 95% confidence interval) about the measurand. The measurand is the radiated emissions measurement of +26.5 dBuV/m at 39.51 MHz, and the 95% bounds for the uncertainty are –3.4 dB to + 3.4 dB. One can thus be 95% confident that the "true" value of the radiated emissions measurement is between +23.1 dBuV/m and +29.5 dBuV/m. *In effect, this means that in the above example there is only a 2.5% chance that the "true" radiated emissions value exceeds +29.5 dBuV/m.*

APPENDIX B
B. Nemko USA, Inc.'s Test Equipment & Facilities Calibration Program

Nemko USA, Inc. operates a comprehensive Periodic Calibration Program in order to ensure the validity of all test data. Nemko USA's Periodic Calibration Program is fully compliant to the requirements of NVLAP Policy Guide PG-1-1988, ANSI/NCSL Z540-1 (1994), ISO 10012-1 (1993-05-01), ISO Standard 17025, ISO-9000 and EN 45001. Nemko USA, Inc.'s calibrations program therefore meets or exceed the US national commercial and military requirements [N.B. ANSI/NCSL Z540-1 (1994) replaces MIL-STD-45662A].

Specifically, all of Nemko USA's *primary reference standard devices* (e.g. vector voltmeters, multimeters, attenuators and terminations, RF power meters and their detector heads, oscilloscope mainframes and plug-ins, spectrum analyzers, RF preselectors, quasi-peak adapters, interference analyzers, impulse generators, signal generators and pulse/function generators, field-strength meters and their detector heads, etc.) and certain *secondary standard devices* (e.g. RF Preamplifiers used in CISPR 11/22 and FCC Part 15/18 tests) are periodically recalibrated by:

- A Nemko USA-approved independent (third party) metrology laboratory that uses NIST-traceable standards and that is ISO Guide 25-accredited as a calibration laboratories by NIST; or,
- A Nemko USA-approved independent (third party) metrology laboratory that uses NIST-traceable standards and that is ISO Guide 25-accredited as a calibration laboratory by another accreditation body (such as A2LA) that is mutually recognized by NIST; or,
- A manufacturer of Measurement and Test Equipment (M&TE), if the manufacturer uses NIST-traceable standards and is ISO Guide 25-accredited as calibration laboratory either by NIST or by another accreditation body (such as A2LA) that is mutually recognized by NIST; or
- A manufacturer of M&TE (or by a Nemko USA-approved independent third party metrology laboratory) that is not ISO Guide 25-accredited. (In these cases, Nemko USA conducts an annual audit of the manufacturer or metrology laboratory for the purposes of proving traceabilty to NIST, ensuring that adequate and repeatable calibration procedures are being applied, and verifying conformity with the other requirements of ISO Guide 25).

In all cases, the entity performing the Calibration is required to furnish Nemko USA with a calibration test report and/or certificate of calibration, and a "calibration sticker" on each item of M&TE that is successfully calibrated.

Calibration intervals are normally one year, except when the manufacture advises a shorter interval (e.g. the HP 8568B Spectrum Analyzer is recalibrated every six months) or if US Government directives or client requirements demand a shorter interval. Items of instrumentation/related equipment which fail during routine use, or which suffer visible mechanical damage (during use or while in transit), are sidelined pending repair and recalibration. (Repairs are carried out either in-house [if minor] or by a Nemko USA-approved independent [third party] metrology laboratory, or by the manufacturer of the item of M&TE).

Each antenna used for CISPR 11 and CISPR 22 and FCC Part 15 and Part 18 radiated emissions testing (and for testing to the equivalent European Norms) is calibrated annually by either a NIST (or A2LA) ISO Standard 17025-Accredited third-party Antenna Calibration Laboratory or by the antenna's OEM if the OEM is NIST or A2LA ISO Standard 17025-accredited as an antenna calibration laboratory. The antenna calibrations are performed using the methods specified in Annex G.5 of CISPR 16-1(1993) or ANSI C63.5-1991, including the "Three-Antenna Method". Certain other kinds of antennas (e.g. magnetic-shielded loop antennas) are calibrated annually by either a NIST (or A2LA) ISO Standard 17025-accredited third-party antenna calibration laboratory, or by the antenna's OEM if the OEM is NIST or A2LA ISO Standard 17025-accredited as an antenna calibration laboratory using the procedures specified in the latest version of SAE ARP-958.

In accordance with FCC and other regulations, Nemko USA recalibrates its suite of antennas used for radiated emissions tests on an annual basis. These calibrations are performed as a precursor to the FCC-required annual revalidation of the Normalized Site Attenuation properties of Nemko USA's Open Area Test Site. Nemko USA, Inc. uses the procedures given in both Subclause 16.6 and Annex G.2 of CISPR 16-1 (1993), and, ANSI C63.4-1992 when performing the normalized site attenuation measurements.

APPENDIX C
C. FCC and NVLAP Accreditation

United States Department of Commerce
National Institute of Standards and Technology

NVLAP®

DEPARTMENT OF COMMERCE * UNITED STATES OF AMERICA *

ISO/IEC 17025:1999
ISO 9002:1994

Certificate of Accreditation

NEMKO USA, INC. - SAN DIEGO EMC DIVISION
SAN DIEGO, CA

is recognized by the National Voluntary Laboratory Accreditation Program for satisfactory compliance with criteria set forth in NIST Handbook 150:2001, all requirements of ISO/IEC 17025:1999, and relevant requirements of ISO 9002:1994. Accreditation is awarded for specific services, listed on the Scope of Accreditation, for:

ELECTROMAGNETIC COMPATIBILITY AND TELECOMMUNICATIONS

December 31, 2004
Effective through

For the National Institute of Standards and Technology
NVLAP Lab Code: 200116-0

NVLAP-01C (06-01)

National Institute of Standards and Technology — NVLAP® — National Voluntary Laboratory Accreditation Program

ISO/IEC 17025:1999
ISO 9002:1994

Scope of Accreditation

Page: 1 of 3

ELECTROMAGNETIC COMPATIBILITY AND TELECOMMUNICATIONS

NVLAP LAB CODE 200116-0

NEMKO USA, INC. - SAN DIEGO EMC DIVISION
11696 Sorrento Valley Road, Suite F
San Diego, CA 92121
Mr. Ricky Hill
Phone: 858-755-5525 x207 Fax: 858-793-9914
E-Mail: rick.hill@nemko.com
URL: http://www.nemko.com

NVLAP Code	*Designation / Description*
Emissions Test Methods:	
12/CIS14	CISPR 14-1 (March 30, 2000): Limits and Methods of Measurement of Radio interference Characteristics of Household Electrical Appliances, Portable Tools and Similiar Electrical Apparatus - Part 1: Emissions
12/CIS14a	EN 55014-1 (1993) with Amendments A1 (1997) & A2 (1999)
12/CIS14b	AS/NZS 1044 (1995)
12/CIS14c	CNS 13783-1
12/CIS22	IEC/CISPR 22 (1997) and EN 55022 (1998): Limits and methods of measurement of radio disturbance characteristics of information technology equipment
12/CIS22a	IEC/CISPR 22 (1993): Limits and methods of measurement of radio disturbance characteristics of information technology equipment, Amendment 1 (1995) and Amendment 2 (1996)

December 31, 2004
Effective through

For the National Institute of Standards and Technology

NVLAP-01S (06-01)

National Institute of Standards and Technology — NVLAP® — National Voluntary Laboratory Accreditation Program

ISO/IEC 17025:1999
ISO 9002:1994

Scope of Accreditation

Page: 2 of 3

ELECTROMAGNETIC COMPATIBILITY AND TELECOMMUNICATIONS

NVLAP LAB CODE 200116-0

NEMKO USA, INC. - SAN DIEGO EMC DIVISION

NVLAP Code	*Designation / Description*
12/CIS22b	CNS 13438 (1997): Limits and Methods of Measurement of Radio Interference Characteristics of Information Technology Equipment
12/EM02a	IEC 61000-3-2, Edition 2.1 (2001-10), EN 61000-3-2 (2000), and AS/NZS 2279.1 (2000): Electromagnetic compatibility (EMC) Part 3-2: Limits - Limits for harmonic current emissions (equipment input current <= 16 A)
12/EM03b	IEC 61000-3-3 (2002-03), edition 1.1: EMC - Part 3-3: Limits - Limitations of voltage changes, voltage flucuations and flicker, in public low-voltage supply-systems, for equipment with rated current <=16 A per phase and not subject to conditional connections
12/F18	FCC OST/MP-5 (1986): FCC Methods of Measurement of Radio Noise Emissions for ISM Equipment (cited in FCC Method 47 CFR Part 18 - Industrial, Scientific, and Medical Equipment)
12/FCC15b	ANSI C63.4 (2001) with FCC Method - 47 CFR Part 15, Subpart B: Unintentional Radiators
12/T51	AS/NZS CISPR 22 (2002) and AS/NZS 3548 (1997): Electromagnetic Interference - Limits and Methods of Measurement of Information Technology Equipment

December 31, 2004

Effective through

For the National Institute of Standards and Technology

NVLAP-01S (06-01)

National Institute of Standards and Technology — NVLAP® — National Voluntary Laboratory Accreditation Program

ISO/IEC 17025:1999
ISO 9002:1994

Scope of Accreditation

Page: 3 of 3

ELECTROMAGNETIC COMPATIBILITY AND TELECOMMUNICATIONS

NVLAP LAB CODE 200116-0

NEMKO USA, INC. - SAN DIEGO EMC DIVISION

NVLAP Code	*Designation / Description*
Immunity Test Methods:	
12/I01	IEC 61000-4-2, Edition 2.1 (2001) including Amds. 1 & 2 and EN 61000-4-2: Electrostatic Discharge Immunity Test
12/I02	IEC 61000-4-3 (2002) and EN 61000-4-3: Radiated Radio-Frequency Electromagnetic Field Immunity Test
12/I03	IEC 61000-4-4 (1995) + Amd. 1 (2000) & Amd. 2 (2001) and EN 61000-4-4: Electrical Fast Transient/Burst Immunity Test
12/I04	IEC 61000-4-5 (1995) + Amd. 1 (2000) and EN 61000-4-5: Surge Immunity Test
12/I05	IEC 61000-4-6, Edition 2.0 (2003) and EN 61000-4-6: Immunity to Conducted Disturbances, Induced by Radio-Frequency Fields
12/I06	IEC 61000-4-8, Edition 1.1 (2001) and EN 61000-4-8: Power Frequency Magnetic Field Immunity Test
12/I07	IEC 61000-4-11 (1994) + Amd. 1 (2000) and EN 61000-4-11: Voltage Dips, Short Interruptions and Voltage Variations Immunity Tests

December 31, 2004
Effective through

For the National Institute of Standards and Technology

NVLAP-01S (06-01)