HME# 400518
Rev - 8/29/03

Wireless 6000

Wireless Drive-Thru Audio System

Installation Instructions

HME
HM ELECTRONICS, INC.
14110 Stowe Drive, Poway, CA 92064 USA
Phone: 1-800-848-4468 Fax: (858) 552-0172

Table of Contents

SECTION 1 SYSTEM DESCRIPTION

1.1 GENERAL....1
1.2 EQUIPMENT....1
1.2.1 Base Station....2
1.2.2 COMMUNICATOR® 3
1.2.3 Battery Charger....7
1.3 OPTIONAL EQUIPMENT....8

SECTION 2 SYSTEM INSTALLATION AND SETUP

2.1 INTERFERENCE PREVENTION....9
2.1.1 Radio Frequency (RF) Interference....9
2.1.2 Electrical Interference....10
2.2 PREPARATION FOR INSTALLATION....10
2.2.1 Tools Required....10
2.3 INSTALLATION PROCEDURE....11
2.3.1 Base Station Installation....11
2.3.2 Cable Pulling....12
2.3.3 Outside Speaker and Microphone Installation and Cable Connections....13
2.3.4 Optional External Vehicle Detector Installation....16
2.3.5 Optional HME Vehicle Detector Board (VDB) Installation....16
2.3.6 External Message Repeater Installation....17
2.3.7 Internal Message Repeater Setup....18
2.3.8 Early Warning Setup....18
2.3.9 Dual-Lane Setup....18
2.3.10 Split-B Audio Setup....18
2.3.11 Auto-Hands-Free Setup....18

SECTION 3 SYSTEM FUNCTIONAL CHECK AND OPERATION

3.1 FUNCTIONAL CHECK....19
3.2 NOISE REDUCTION ADJUSTMENT....19
3.3 OPERATION....20
3.3.1 Single-Lane Operation....20
3.3.2 Dual-Lane Operation....21
3.3.3 Speed-Team Operation....21
3.3.4 Message Repeater Operation....22
3.4 IN CASE OF PROBLEMS....23

WIRING DIAGRAMS....25-28 and 44-46

APPENDIX A: BASE 6000 INTERFACE DESCRIPTION....33
APPENDIX B: FUNCTIONAL DESCRIPTION OF BLOCK DIAGRAM....36
APPENDIX C: WIRELESS 6000 SPECIFICATIONS....37
APPENDIX D: SP2000A SPEAKER/MICROPHONE INSTALLATION....38
APPENDIX E: DM1 MICROPHONE INSTALLATION....39

FCC NOTICE....47

The HME logo and the word COMMUNICATOR® are registered trademarks of HM Electronics, Inc.
© Copyright HM Electronics, Inc. - August 2003

List of Figures

Figure	Title	Page
1	Wireless 6000 equipment	1
2	Wireless 6000 Base Station	2
3	Communicator controls	3
4	Wearing the Communicator headset	3
5	Registration button and indicators	5
6	COMMUNICATOR® battery-release latch	6
7	Battery charger AC adapter connection	7
8	230VAC adapter wiring for battery charger	7
9	Batteries in charger	8
10	Open base station showing four screw holes	11
11	Screw anchor and screw in wall	11
12	Microphone	13
13	Microphone unit and foam inserts shown in typical speaker post installation	14
14	Pry rear panel away from speaker box at the four points shown	14
15	Remove rear panel from speaker box	14
16	Mark speaker post or menu board through wire hole in rear panel of SP2500LP speaker assembly	15
17	Screw the self-tapping screws through holes in rear panel of SP2500LP speaker assembly	15
18	SP2500LP cable connections	15
19	External message repeater connections	17
20	Wiring diagram, Wireless 6000, Half-Duplex with VDB but no Switcher Board	25
21	Wiring diagram, Wireless 6000, Half-Duplex with VDB and Switcher Board	26
22	Wiring diagram, Wireless 6000, Full-Duplex with VDB but no Switcher Board	27
23	Wiring diagram, Wireless 6000, Full-Duplex with VDB and Switcher Board	28
24	Wireless 6000 Base Station Circuit Board Adjustments	29
25	Wireless 6000 Transceiver Board Adjustments, Connectors and Indicators	30
26	Wireless 6000 Base Station Circuit Board Jumpers	31
27	Wireless 6000 Base Station Circuit Board DIP Switch Functions	32
B-1	Wireless 6000 Base Station Block Diagram	36
D-1	Installing the SP2000A	38
D-2	SP2000A cable connections	38
E-1	Sequence of DM1 and foam inserts in speaker post or menu board	39
E-2	DM1 and foam inserts shown in typical SPP2 speaker post installation	40
E-3	Installing gasket and bracket	41
E-4	Routing cable through strain relief	41
E-5	Mount microphone on bracket	41
E-6	Install windscreen on microphone	42
E-7	Attach mounting bracket	43
E-8	Install strain relief	43
E-9	DM1 Microphone mounted on top of menu board	43

SECTION 1. SYSTEM DESCRIPTION

1.1 GENERAL

The Wireless 6000 is a wireless audio system primarily for use at quick-service restaurants. An optional vehicle detector board can also be used with the system.

As you unpack the Wireless 6000, check the packing list for each item to verify receipt of all components and equipment listed.

1.2 EQUIPMENT

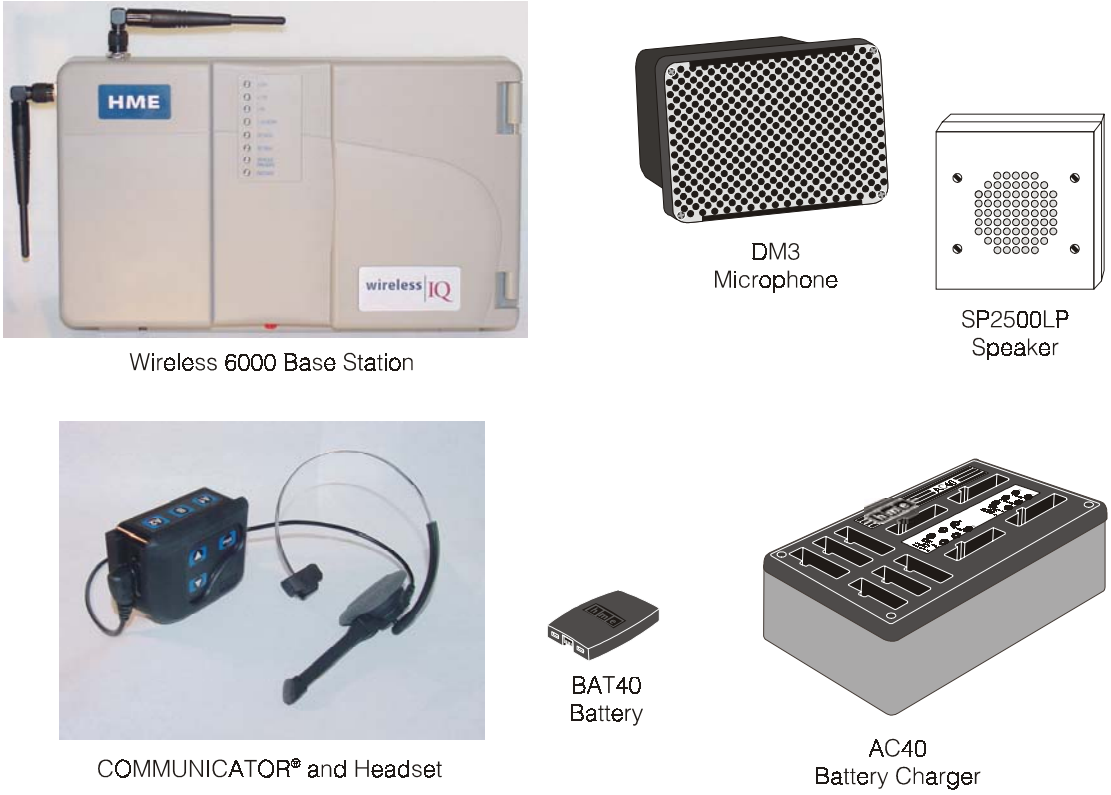

Figure 1. Wireless 6000 equipment

1.2.1 Base Station

Front – (See **A** on Figure 2.)

- Four **power supply lights** are on when the base station has AC power.
- **"A" TALK light** is on during channel-A transmission.
- **"B" TALK light** is on during channel-B transmission.
- **VEHICLE PRESENT light** is on when a vehicle is present in the drive-thru lane or when the system is in vehicle-detect override.
- **RECORD light** is ON RED when the base station is ready to record red message for the message repeater, and BLINKING RED while red message is being recorded. It is ON GREEN when the base station is ready to record green message for the message repeater, and BLINKING GREEN while green message is being recorded.

Bottom – (See **B** on Figure 2.)

- **PUSH FOR RECORD MODE button** must be pushed IN AND RELEASED ONCE to prepare the base station to record red message for the message repeater, or pushed IN AND RELEASED TWICE to record green message.

Behind Front Door – (See **C** on Figure 2.)

- **MESSAGE REPEATER switches** must be switched ON to use the message repeater, OFF when the message repeater is not being used. Instructions are given inside of the front door.
- **SPEED TEAM switch** must be switched ON for speed-team operation, OFF for normal drive-thru operation
- **VEHICLE DETECTOR switch** must be switched to OVERRIDE to disable vehicle detector; to reset vehicle detector, switch to OVERRIDE for 5 seconds, then switch back to NORMAL and leave for normal vehicle detection operation.
- **DIP switches** at the top are used to control message audio routing to the speakers and COMMUNICATOR®s. DIP switch settings are shown on the inside of the front door.
- **Nine level controls** are used to set VAA level, Vehicle tone level, audio source levels at the grill speaker, outbound audio source levels at the outside speaker and the inbound level from the speaker post microphone.

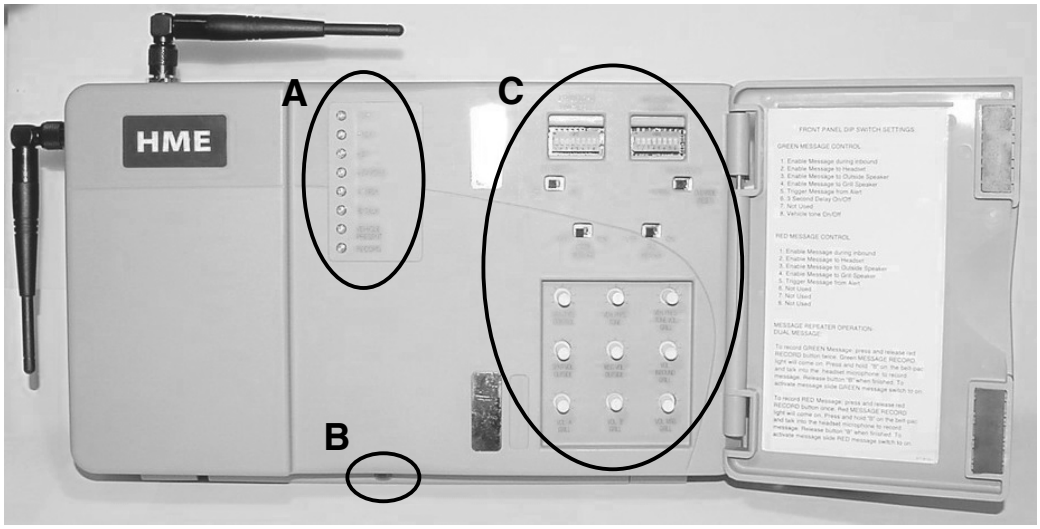

Figure 2. Wireless 6000 Base Station

1.2.2 COM6000BP COMMUNICATOR®

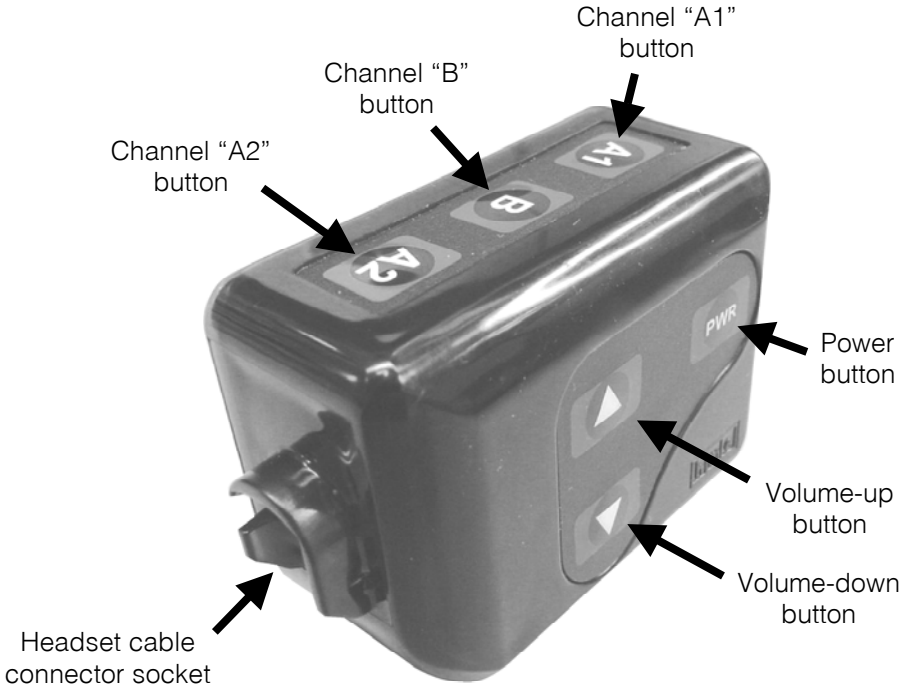

Figure 3. Communicator controls

1. Features and Controls

2. How to Wear the Beltpac & Headset

- Wear the headset with the microphone on your right or left side next to your mouth.
- Adjust the headband for a comfortable fit.
- Clip the beltpac to your belt or waistband on either your right or left side.
- Run the headset cable up your back and clip it to the back of your shirt and collar with the clothing clips on the cable.

Figure 4. Wearing the Communicator headset

3. How to Use the COM6000BP COMMUNICATOR® Controls

The Communicator control buttons have a snap action. They will activate when pressed firmly. Use your fingertips, not your fingernails, to press the buttons.

a. Power On/Off

- **Power On —** Press and release the **PWR** (power) button. A voice message in the earpiece will say "power on," and the red power lights next to the **A1** and **A2** buttons on the Communicator will go on. After a short time, one light will go off and the other will change to green, indicating the Communicator is ready to use. The voice message will say "Lane 1 (or 2) ready." In dual-lane operations, a green light next to **A1** indicates ready on Lane 1, next to **A2** indicates ready on Lane 2.
- **Power Off —** Press and hold the **PWR** button for approximately two seconds. A voice message in the earpiece will say "power off," and the power lights will go off.

b. Volume Up/Down

- **Volume Up Adjustment —** Press and release the volume-up ▲ button. Each time it is pressed, a beep will be heard in the earpiece as the volume increases one step. When maximum volume is reached, "maximum" will be heard in the earpiece. If you press and hold the volume-up button, repeating beeps will be heard as the volume steps up to maximum. "Maximum" will be heard in the earpiece, and will be repeated until you release the volume-up button.
- **Volume Down Adjustment —** Press and release the volume-down ▼ button. Each time it is pressed, a beep will be heard in the earpiece as the volume decreases one step. When minimum volume is reached, a double beep will be heard. If you press and hold the volume-down button, repeating beeps will be heard as the volume steps down to minimum.

4. COMMUNICATOR® Registration

Prior to operation of the Wireless 6000 system, each Communicator must be registered for use with a specific base station. The base station will then recognize all registered Communicators when their power is on, differentiating between them and interfering transmissions from other electronic equipment operating on similar frequencies.

Register each Communicator as follows:

- Be certain all Communicators to be registered are powered off and the base station power is on.
- Open the base station and press the registration button near the lower-left corner of the base station circuit board shown in Figure 5.
  — *If no Communicators are powered on, the status light shown in Figure 5 will be blinking red. If any Communicators are powered on, the status light will be blinking green.*
  — *After you press the registration button, the Communicator ID display will show a small "o" for open.*
- Press and hold the **B** button while pressing and releasing the **PWR** (power) button to turn the Communicator on, then release the **B** button. This will cause the Communicator to enter the registration mode.
  — *The status light in the base station will be blinking green, and the Communicator ID display will continue to show a small "o" for open.*
  — *The power lights next to the **A1** and **A2** buttons on the Communicator will be blinking red then will change to green.*

When the registration is successfully completed:

— *The green status light in the base station will be on steady and the Communicator ID display, to the left of the status light, will show the ID number assigned to this Communicator. ID numbers are assigned sequentially as 0 thru 9, A, b, C, d and E.*

— *One of the power lights on the Communicator will remain on steady green.*

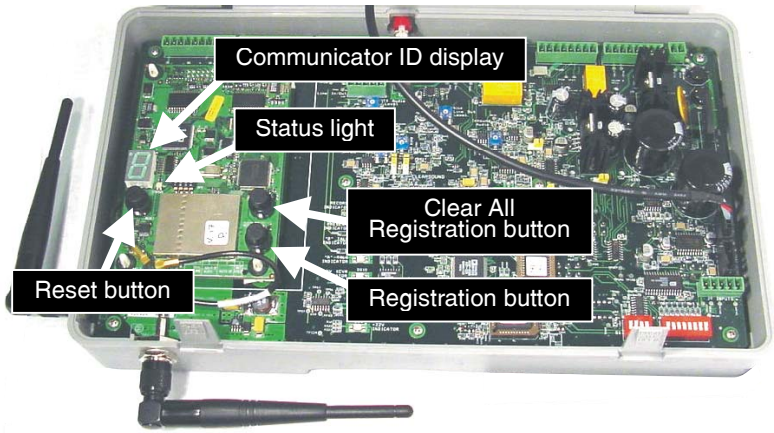

Figure 5. Registration button and indicators

NOTE: A maximum of 15 Communicators can be registered. If a Communicator is replaced, the new one must be registered, but the old one remains in memory. If the maximum number of 15 is exceeded, all current registrations must be cleared, and all active Communicators must be re-registered. To clear all current registrations, press the "Clear All Registration" button and the "Reset" button simultaneously. Continue holding the "Clear All Registration" button after releasing the "Reset" button, until the clear code "c" (lower case) appears on the Communicator ID display. All active Communicators can then be registered, one at a time.

5. Battery Removal and Replacement

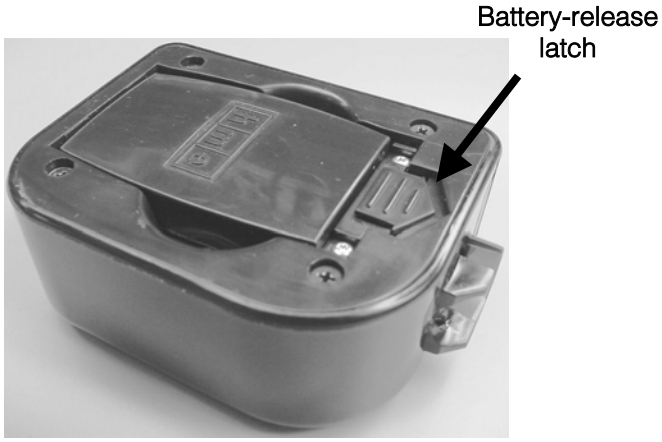

Figure 6. COMMUNICATOR® battery-release latch

TO CHANGE BATTERIES: When a battery is becoming weak, a voice in the earpiece will say "Change battery." When this happens, take the Communicator out of its pouch and remove its battery by carefully sliding the battery-release latch in the direction of the arrow shown in Figure 6. Pull up on the end of the battery near the battery-release latch and lift the battery out of the Communicator, or turn the Communicator over and catch the battery in your hand.

TO REPLACE BATTERIES: When replacing a battery in the Communicator, place the end of the battery with the metal contacts into the battery holder on the Communicator, in the same position as the battery you removed. Press the top of the battery carefully into the battery holder until it snaps in place under the battery-release latch.

1.2.3 Battery Charger

IMPORTANT: Before installing the system, connect the AC adapter to the battery charger and plug it into an AC electrical outlet. Place all the COMMUNICATOR® batteries into it for charging while the system is being installed.

1. Charger Setup

Connect the battery charger cable to the 16.5VAC adapter as shown in Figure 7.

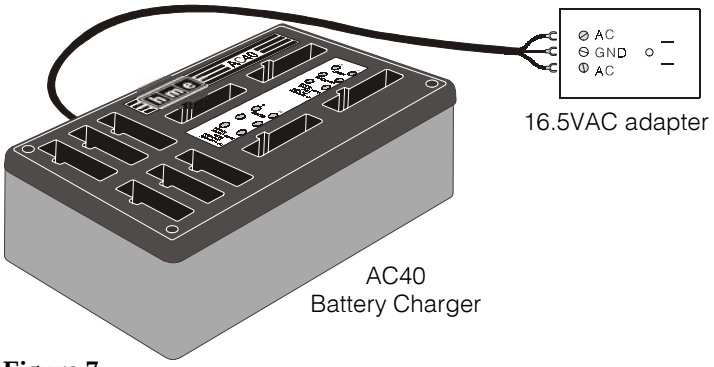

Figure 7.
Battery charger AC adapter connection

Plug the adapter into an AC electrical outlet and secure it to the outlet with the grounding screw (if provided). The red lights will come on and go off, then the yellow lights will come on and stay on.

2. 230 Volt AC Adapter Connections Outside the U.S.A.

- Connect an electrical plug to the wires on the power cable according to color codes (**Brown** = live, **Blue** = neutral, **Green with yellow stripes** = ground).
- Plug the other end of the power cable into the receptacle on the AC adapter.
- Remove the spade lugs from the brown and blue wires of the battery charger cable and cut the green/yellow wire as short as possible. No ground wire will be used. Cut the connector off the AC adapter output cable. Strip enough of the insulation from the wires of both cables so they can be spliced. Splice the wires from the AC adapter cable to the "AC" wires of the battery charger cable. Cover the splice with electrical tape or shrink tubing.
- Plug the electrical plug into an AC electrical outlet.

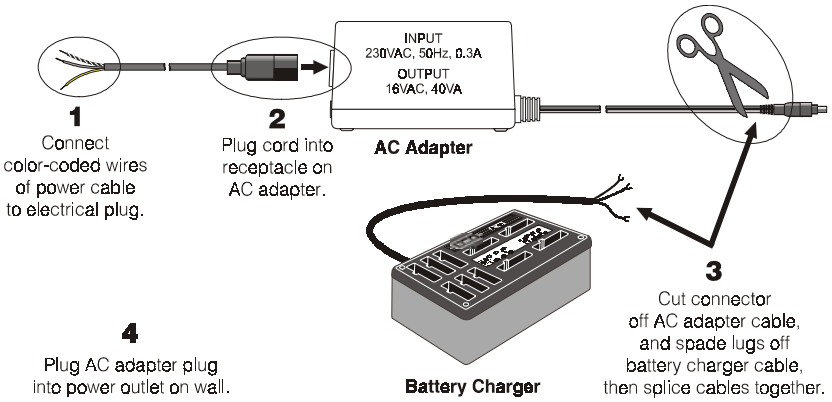

Figure 8. 230VAC adapter wiring for battery charger

3. Battery Charging

- Insert battery in one of four charging ports until it clicks in place.
- Battery charging time is approximately 2 hours.
- Yellow light next to each battery port stays on while port is empty.
  When battery is in port, yellow light flashing next to battery port indicates CHARGE PENDING, which means the temperature where the charger is located is out of the battery's operating range (32º-104ºF, 0º-40ºC).
  Adjust the room temperature or move the charger to a cooler area.
  When battery is in port, yellow light on steady next to battery port means CHARGE FAILED. Follow diagnostic instructions on side of battery charger.
- Red CHARGING light next to battery port stays on while battery is charging.
- Green READY light next to battery port goes on when battery is fully charged.
- Store fully charged batteries in storage ports.

CAUTION: Do not remove batteries from the charger until the green READY light is lit, or the charger will reset and the charge cycle will begin again.

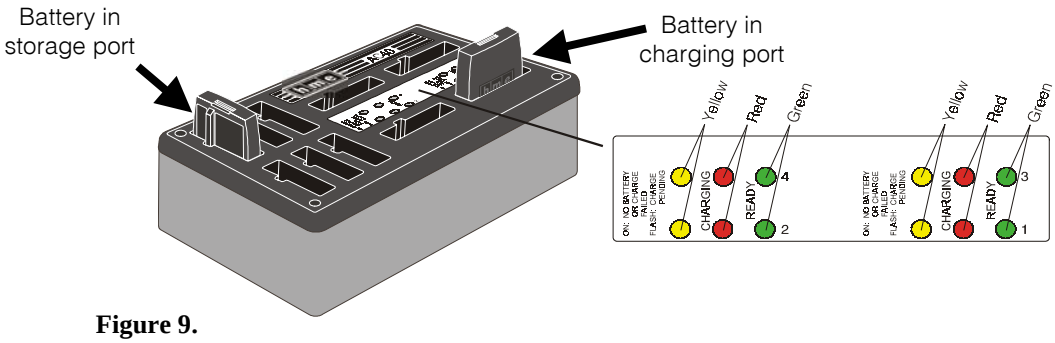

Figure 9.
Batteries in charger

1.3 OPTIONAL EQUIPMENT

Equipment	Model Number
COMMUNICATOR®	COM6000BP
Battery for COM6000BP	BAT40
Headset Earmuff	No model number
Ceiling Speaker	MM100
Ultrasonic Vehicle Detector	DU3
Vehicle Detector Board	VDB101A
Vehicle Detector Loop (underground)	VDL100
Message Repeater	MR300
Low-Profile Speaker	SP2500LP
Microphone	DM3
Mode Switch (dual lane)	MS1000
Switcher Circuit Board	No model number
Remote Record Switch	No model number
Remote Antenna Kit	No model number
Remote Speed Team Switch	SW2

SECTION 2. SYSTEM INSTALLATION AND SETUP

2.1 INTERFERENCE PREVENTION

CAUTION: Interference may occur if the audio system is not properly installed.

The following types of interference could occur if precautions are not taken in installation of the system. Read this section carefully before proceeding with the installation.

2.1.1 Radio Frequency (RF) Interference

Resolving the cause of RF interference is difficult and time-consuming. The following precautions will help avoid the most common RF interference problems.

- Find the best base station/antenna location before mounting it permanently.
- Solder all joints (including crimp joints) at the speaker location. This is especially important in damp climates
- Be certain all joints and connections are tight.
- Avoid leaving long lengths of unshielded wire anywhere in the audio system.
- Ground the shield of the outgoing speaker cable. In severe cases of interference, grounding the shield at the speaker may help.

AM broadcast and FM radio frequency interference may cause similar problems but require different corrective action. AM interference symptoms may appear to be less severe at certain times of day, since a 50% reduction of transmitter output power at dusk (5-7 PM) is required in some areas for AM radio stations rated at or above 100kW. Note the following symptoms carefully to determine the possible cause of interference. Call HME at 1-800-848-4468 if assistance is required.

AM Interference:

Static or hum may be heard in the headset when the system is active. The point of entry of the AM interference is at the outside speaker/microphone via the cables connected to the base station. In order to block out the AM signal, first locate and identify any AM station in the area, and find out its operating frequency and transmitter output power. The system can then be modified with a network of inductors and capacitors that will trap the undesirable AM signal at the point of entry into the system. Static, hum and/or voice may be heard in the headset when the system is active or when transmitting in either channel A or B. The point of entry for the interference can be at three different locations: the outside speaker cables, the COMMUNICATOR® receiver, and the base station transmitter. The AM station frequency may completely suppress or overpower the audio system's transmitter signal, depending on the operating frequency, transmitter tower location and output power of the AM radio station. It may be necessary to move the base station.

FM Interference:

A common symptom of FM interference is the presence of cracks, pops and other noises in the Communicator when transmitting on either channel A or B, or when the system is active.

2400MHz Wireless Telephone Interference:

If there is a 2400MHz cordless telephone nearby, interference may occur. However, because the Wireless 6000 is a frequency-hopping system, this problem is unlikely. If it does occur, changing frequencies on the telephone may alleviate the problem. If not, move the phone as far as practical from the base station, or ask the customer to use another type phone.

2.1.2 Electrical Interference

The effect of electrical faults in appliances and other electrical equipment can make operation of a wireless system ineffective in communicating with customers. The most common symptoms are static, hum, crackling, buzzing and zip sounds in the headset when the system is active. Interference caused by electrical faults in lighting systems might not be noticed immediately, since most lighting systems are controlled by a timer or light-sensing device.

Faulty Wiring or Components:

Faulty components or electrical wiring in menu boards or speaker posts can cause symptoms identical to those caused by AM interference. Remove power to the menu board or speaker post at the circuit breaker until proper repair of the electrical system can be made.

Improper Earth Grounds:

Improper earth grounds throughout the building can result in random buzzing and zips in the headset when operating in either channel A or B. Placing a surge protector between the base station AC adapter and the AC electrical outlet will eliminate the problem in most cases.

2.2 PREPARATION FOR INSTALLATION

IMPORTANT: If you haven't already done so, before proceeding with the installation, plug the battery charger into an AC electrical outlet and place all COMMUNICATOR® batteries into it for charging while the other equipment is being installed.

Approximately 3 hours is required for installation of the Wireless 6000.

Before installing the system, coordinate the time of installation with the store owner/manager to minimize disruption of business.

Be certain the site has been properly prepared as follows.

- Electrical power must be connected and available.
- Some type of compatible vehicle detector loop or other vehicle detector system must already have been installed in the drive-thru lane(s).

2.2.1 Tools Required

- Phillips (cross-point) screwdriver, size #2
- standard (slotted) screwdriver, 1/8 inch (4 mm)
- power drill and drill-bit set
- fish tape, 100 feet (30 meters)
- wire cutter / stripper
- soldering iron
- rosin-core solder
- electrical tape

2.3 INSTALLATION PROCEDURE

2.3.1 Base Station Installation

Discuss the location of the base station with the store owner or manager. It should be mounted with the bottom of the cabinet no more than 5 feet (1.52 meters) above the floor, away from grease and large metal objects. It must be near enough to an available AC electrical outlet to reach the outlet with the 10 foot (3 meter) AC power adapter cord. It must be near enough to the pull box to be reached by the cables, which will be pulled into the building through the outer wall. Also, the antenna(s) used for the base transmitter must be installed to provide a separation distance of at least 7.87 inches (20 cm) from all persons, and must not be co-located or operating in conjunction with any other antenna or transmitter.

NOTE: For dual drive-thru installations, follow the instructions below to install two base stations near each other. The two base stations **must not** be mounted closer than 3 feet (.91 meter) from each other. Interconnect the J22 and J26 connectors as shown on pages 25 – 28. Cable pulling and installation of an outside speaker and microphone for each lane will also be done according to the following instructions.

Walk test transmission and reception with two people using COMMUNICATOR®s (with fully charged batteries), pressing button **B** to communicate with each other around the area where the Communicators will be used. Also, walk past the menu board to test reception when using speed-team operation. Continue doing this with the base station in various locations until the best possible transmission/ reception is found. When you have determined the best location, unplug the AC adapter and mount the base station on the wall as follows.

- Hold the base station, with its door open, against the wall at the desired mounting location, and mark the wall through the four screw holes on the back of the cabinet as shown in Figure 10.
- Remove the base station from the wall and drill four $^{3}/_{16}$ inch (4.76mm) holes in the wall at the marked spots.
- Insert the enclosed #6 screw anchors into the holes.
- Screw the four enclosed screws into the anchors as shown in Figure 11, leaving the screw heads approximately $^{1}/_{8}$ inch (3.18mm) away from the wall.
- Position the four screw holes in the back of the base station over the four screws, and slide the base station downward to secure it in place.
- Connect the base station power adapter cable to the base station's 16.5VAC adapter as you did for the battery charger, as shown in Figure 7, page 7. For use outside the United States, see 230VAC adapter connections shown in Figure 8, page 7.
- Connect the two wires at the other end of the cable to J16 on the top-left of the audio circuit board in the base station. Plug the adapter into the electrical outlet nearest the desired base station mounting location.

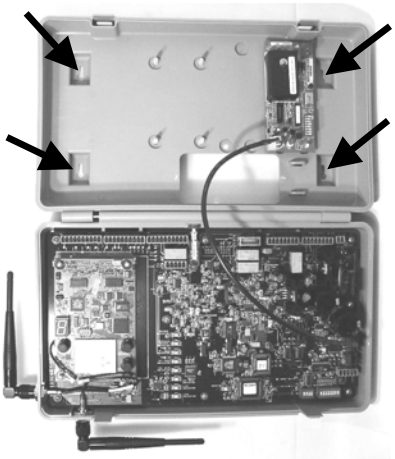

Figure 10. Open base station showing four screw holes

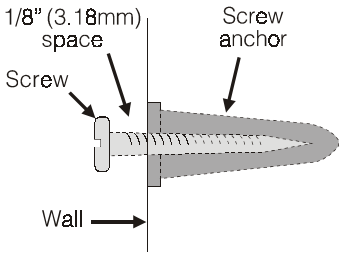

Figure 11. Screw anchor and screw in wall

2.3.2 Cable Pulling

CAUTION: If not using the HME Audio Cable, be certain the speaker/microphone wires are a twisted pair. For full-duplex installations, the speakers and microphones must use separate cables or audio feedback will occur.

Never run high-voltage cables in the same conduit with audio or loop cables.

The recommended HME cable contains four color-coded, insulated wires and a bare shield (drain) wire. This cable can be used to connect any Wireless 6000 component to the base station.

Pull the cables (two for full-duplex, one for half-duplex) through the underground conduit from the outside speaker post or menu board into the building as follows.

NOTE: For dual drive-thru installations, repeat the following steps to route cable from inside the building to the speaker post or menu board in each drive-thru lane.

- Run fish tape from inside the building, through the conduit to the speaker post or menu board.
- Go outside. If more than one cable are being pulled, **mark the cables and spools for identification**. Fasten each cable to the fish tape where it comes out of the conduit, and return to the customer-service area inside the building.
- Pull the fish tape and cable through the conduit, into the building. As the cable comes through the conduit, disconnect it from the fish tape and continue pulling enough of it through the conduit to reach the base station.
- Return to the outside customer-service area, and route the cable from the outside conduit to the speaker and microphone units in the speaker post or menu board.
- Cut the cable, leaving approximately 3 feet (915 mm) of slack. If more than one cable have been pulled, **mark the ends of the cables again for identification**.
- Remove approximately 2 inches (50 mm) of the outer insulation from the end of each cable. Strip approximately ½ inch (12 mm) of insulation from each of the four wires in the cable.
- When all cables have been pulled from outside into the building, gather the cables inside the building and route them together to the base station, through walls and over ceiling panels if possible.

2.3.3 Outside Speaker and Microphone Installation and Cable Connections

This section describes standard, full-duplex installations, using the standard microphone and the SP2500LP Low-Profile Speaker. Specific installation requirements may vary. Refer to the wiring diagrams on pages 25 – 28 for cable connections.

Although the standard microphone and SP2500LP will provide optimum performance, in some cases the DM1 Microphone may be used. For DM1 installation instructions, see Appendix E.

NOTE: For half-duplex installations, see Appendix D for installation of the SP2000A Speaker/Microphone Unit. The SP2000A is used as the speaker and microphone in half-duplex installations.

In order to avoid audio feedback, the speaker unit must be mounted at least 2 feet (610 mm) from the microphone unit. Positioning of the two units is critical.

The microphone unit must be mounted inside the speaker post or menu board, against the speaker grill. It should be installed first, so it can be positioned where the customer will be speaking directly into it. The speaker unit can then be installed anywhere around the microphone unit, as long as they are at least 2 feet (610 mm) apart, center-to-center. This distance may vary according to specific conditions.

NOTE: Try the system with the speaker unit at various locations before permanently mounting it. If it is not positioned correctly, feedback may occur. If this happens, reposition the speaker at other locations around the microphone unit until the feedback disappears. If possible, park a vehicle in front of the post to simulate echo conditions that may also cause feedback.

1. Installing the Microphone

Typical microphone installation involves mounting the unit with the enclosed foam pieces, inside the upper compartment of the speaker post. The foam will fit many types of speaker posts and menu boards. If the microphone must be mounted in a small area, compress the foam when installing it and closing the speaker post or menu board. In larger areas, additional foam (not supplied) must be added.
To install the microphone in a typical speaker post, follow the instructions on page 14 and refer to Figure 13. Installation in a menu board will be similar, within the menu-board speaker compartment.

Figure 12. Microphone

- Open the speaker post and remove any existing equipment, foam or debris. If there is an existing microphone, remove it and disconnect the microphone cable from it.
- Splice the wires of the microphone cable (new or existing) from the audio system to the wires of the cable extending from the microphone unit, according to the audio system wiring diagram.
- Place the enclosed foam windscreen against the inside of the metal speaker grill.
- Place the front of the microphone unit flush against the foam windscreen, centered on the speaker grill.

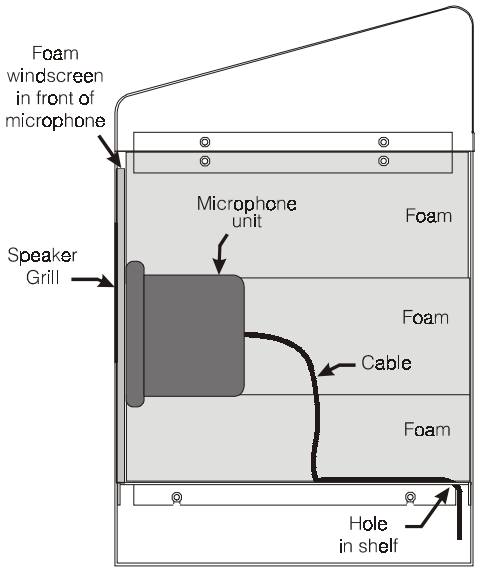

Figure 13.
Microphone unit and foam inserts shown in typical speaker post installation

- **For optimum performance, the microphone <u>must</u> be mounted flush and tight against the foam windscreen, behind the speaker grill.** Pack the remaining enclosed pieces of foam around the top and bottom of the microphone unit, and in back of it, so it will be held securely in place against the speaker grill when the compartment is closed. If required, add extra foam (not supplied) on the sides of the microphone to fill the enclosure.
- **IMPORTANT:** Fill all the holes and cavities in the speaker post or menu board, between the speaker and microphone, with insulating foam sealant ("Great Stuff" expanding polyurethane foam or equivalent, available at home improvement stores). ***CAUTION: Do not use the foam sealant in a wet area, or allow it to come in contact with water. See can for precautions and safety information.***
- Close the speaker post.

2. Installing the SP2500LP Low-Profile Speaker

Use a flat blade screwdriver, or similar tool, to open the SP2500LP speaker by prying the rear panel away from the speaker box at the four points shown in Figure 14. Remove the rear panel from the speaker box as shown in Figure 15.

NOTE: The speaker should be mounted internally whenever possible.

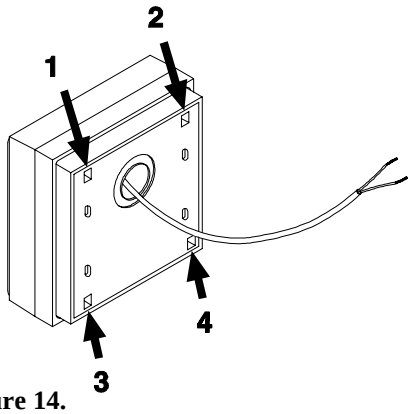

Figure 14.
Pry rear panel away from speaker box at the four points shown

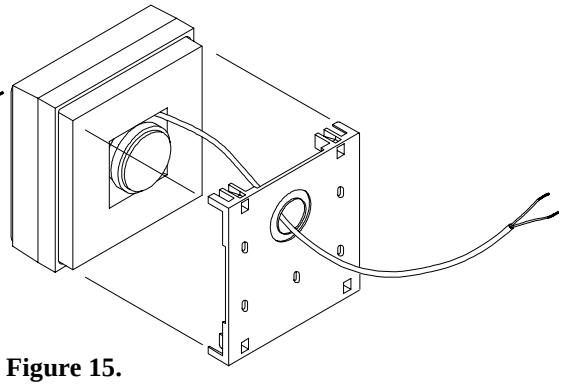

Figure 15.
Remove rear panel from speaker box

Keep in mind that the SP2500LP must be mounted at least 2 feet (610 mm) from the microphone, center-to-center.

- Hold the rear panel of the SP2500LP flat against the surface of the speaker post or menu board, at the desired mounting location, as shown in Figure 16. Use a pencil to mark the speaker post through the wire hole in the panel. Remove the panel and set it aside. Drill a ¼ inch (6 mm) wire hole at the marked location.
- Hold the rear panel against the surface, in the same position as before, and screw the four enclosed self-tapping screws through each of the screw holes on the panel, into the speaker post or menu board as shown in Figure 17.
- Route the cable from the back of the speaker through the wire hole in the rear panel of the speaker assembly, into the speaker post. Close the speaker assembly box by pressing it tightly against the rear panel.

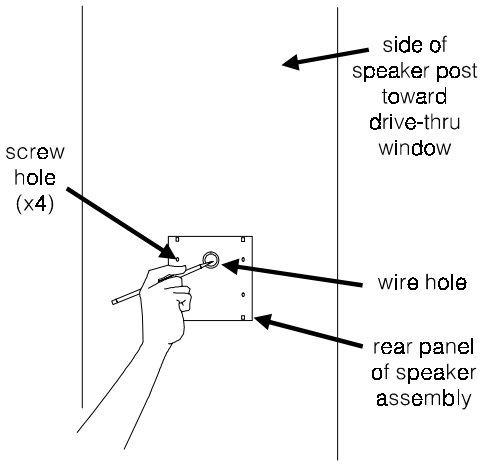

Figure 16.
Mark speaker post or menu board through wire hole in rear panel of SP2500LP speaker assembly

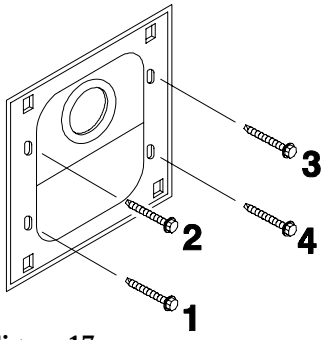

Figure 17.
Screw the self-tapping screws through holes in rear panel of SP2500LP speaker assembly

SP2500LP Cable Connections:

- Inside the speaker post or menu board, connect the green and white wires of the appropriate cable to the wires coming from the speaker as shown in Figure 18. Do not connect the drain wire. Solder the connection and cover it with electrical tape or shrink tubing.

IMPORTANT: For full-duplex systems, use separate cables for speaker and microphone, or feedback may occur.

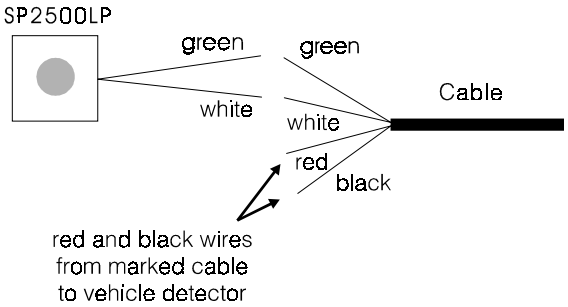

Figure 18. SP2500LP cable connections

2.3.4 Optional External Vehicle Detector Installation

If an external type vehicle detector will be used, install it according to its own installation instructions. Connect the vehicle detector to the base station according to the appropriate wiring diagram on pages 25 – 28. Note that the connections are different for internal and external type vehicle detectors.

- If an **internal vehicle detector** is used, route a cable from the underground loop to the TB1 terminal block on the Vehicle Detector Board.
- If an **external vehicle detector** is used, route a cable from its output to the J30 connector on the audio board in the Wireless 6000 base station.
- Remove 4 inches (100 mm) of outer insulation from the end of the cable at the base station, and strip approximately ¼ inch (6 mm) of insulation from each of the color coded wires coming from the cables.
- Connect the color-coded wires to connector J30, pins 3 and 5 for negative vehicle detection according to the wiring diagrams on pages 25 – 28. Be certain the wires are fully inserted into each connector plug to prevent shorting the wires.

2.3.5 Optional HME Vehicle Detector Board (VDB) Installation

To install an HME VDB in the base station, follow the instructions below.

- Open the base station by pushing the latches on the front cover and VERY CAREFULLY guiding the cover downward.
- Carefully position the three holes in the VDB over the three plastic standoffs at the upper right side, inside the base station as shown in Figure 10. Press on the VDB until the tips of the three standoffs snap through the holes in the board.
- Connect the cable assembly enclosed with the VDB to the P1 connector on the vehicle detector board, and the other end to the J6 connector near the upper, right corner of the switcher board. If there is no switcher board, connect the cable assembly to the P1 connector on the vehicle detector board, and the other end to the J10 connector at the right end of the audio circuit board as shown in Figures 20 – 23 on pages 25 – 28.
- Close the cover on the base station, and lock it by pushing until it latches.

2.3.6 External Message Repeater Installation

If an external message repeater is used, it must be wired in series with the outside speaker. It also requires a vehicle-present signal. Connect the message repeater vehicle-present input to the isolated vehicle detector output on the Audio Circuit Board.

NOTE: No output detect will be generated if the base station power is removed.

External message repeater connections when optional Switcher Circuit Board is installed

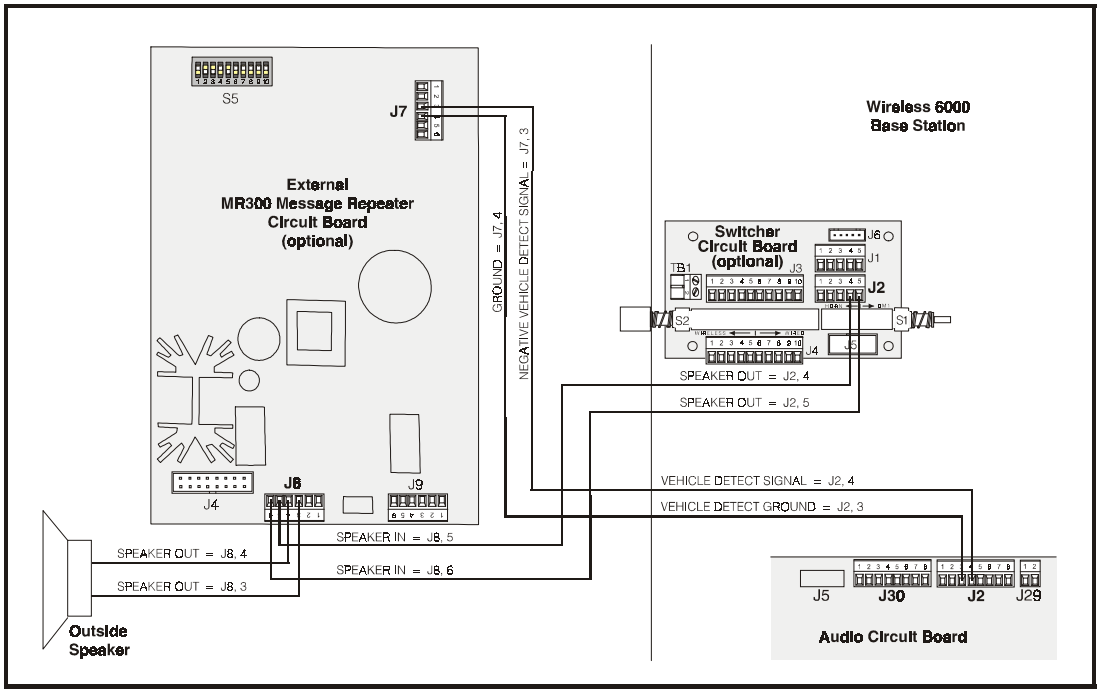

External message repeater connections when no Switcher Circuit Board is installed

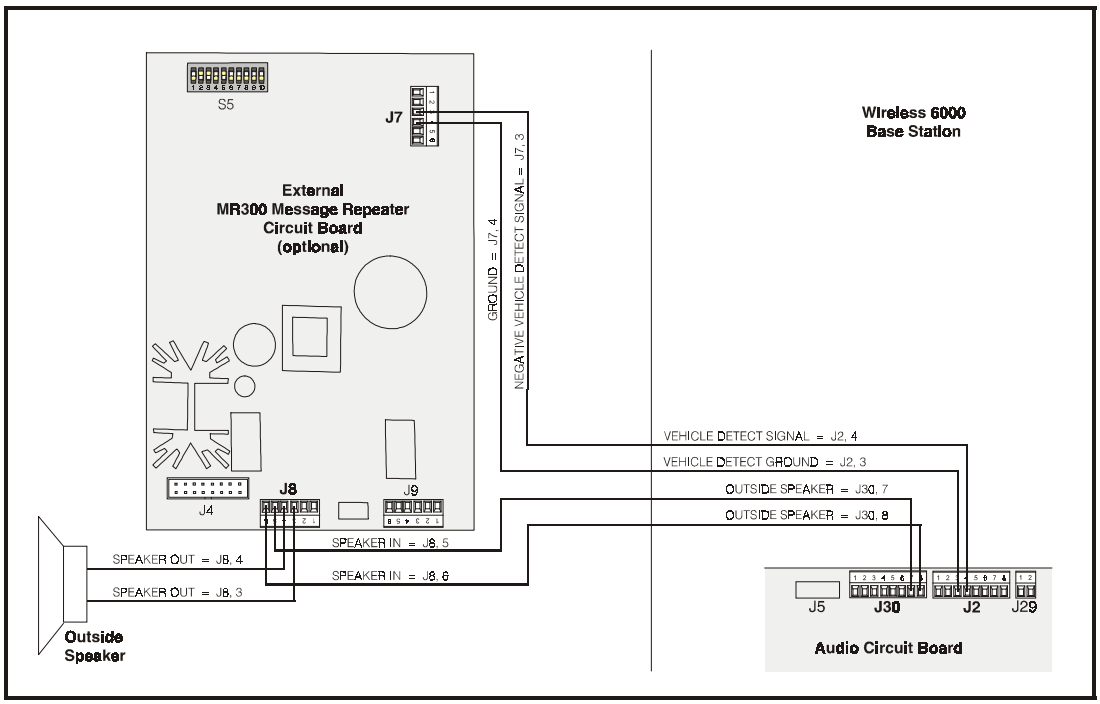

Figure 19. External message repeater connections

2.3.7 Internal Message Repeater Setup

Locate and set the “Red Message” and “Green Message” slide switches and the “Red Message Control” and “Green Message Control” DIP switches on the front panel of the base station. Refer to page 22 for “Red Message Control” and “Green Message Control” switch functions and message recording instructions.

If a System 30 Timer is installed with the Wireless 6000, the timer alert output can be used to trigger tones in the headset or a message to be played by the message repeater. Set “Red Message Control” and/or “Green Message Control” #5 switch to ON for an alert tone (double beep), which will be heard only in headsets, or OFF for recorded messages to be heard through outside speakers and/or headsets selected with the #2, 3 and 4 switches.

If Wireless 6000 message repeater will not be triggered by an external device, set both “Red Message Control” and “Green Message Control” #5 switches to OFF so the message repeater input will be triggered only by vehicle detector signals.

2.3.8 Early Warning Setup

An extra vehicle detector can be used with the Wireless 6000 to give a pre-warning signal when a vehicle is entering the drive-thru area. To set up a pre-warning signal, first install the extra vehicle detector at the desired detection point then connect its cable to connector J9, positions 1 and 2 on the base station audio circuit board. If a second internal Vehicle Detector Board is used, connect its P1 to J15 on the Audio Circuit Board. Wire J25, #8 and 9 to J9, #1 and 2 respectively.

2.3.9 Dual-Lane Setup

To set up the Wireless 6000 system for dual-lane operation, place K1 DIP switch #1 on the base station transceiver board in the ON position, then press the “Reset” button. Refer to Figure 25 on page 30.

2.3.10 Split-B Audio Setup

Split-B audio is used in dual-lane operations to limit audio transmission from Lane 1 COMMUNICATOR®s to be heard only by other Lane 1 Communicator operators, and transmission from Lane 2 Communicators to be heard only by other Lane 2 Communicator operators. When the Split-B audio feature is not used, **B** audio transmission from either lane is heard by all Communicator operators in both lanes.

To set up the Wireless 6000 system for split-B audio operation, place K1 DIP switch #2 on the base station transceiver board in the ON position, then press the “Reset” button. Refer to Figure 25 on page 30.

2.3.11 Auto-Hands-Free Setup

Auto-Hands-Free operation is explained on page 4. To set up the Wireless 6000 system for auto-hands-free operation, place K1 DIP switch #3 on the base station transceiver board in the ON position, then press the “Reset” button. Refer to Figure 25 on page 30.

SECTION 3. SYSTEM FUNCTIONAL CHECK AND OPERATION

3.1 FUNCTIONAL CHECK

ACTION	RESULT
Plug base station AC adapter into electrical outlet.	System power is on. Base station POWER lights are on. System is silent.
Go outside (or have someone else go outside) and follow the steps below.	
Push COMMUNICATOR® button **A** and speak into headset microphone.	Audio should be heard at outside speaker.
Release button **A**. Place vehicle detector reset switch in OVERRIDE position. Tap on outside microphone.	Vehicle present tone should be heard in headset earpiece, followed by inbound audio. If this does not happen, there is a wiring problem.

3.2 NOISE REDUCTION ADJUSTMENT

When the ClearSound feature of the Wireless 6000 is turned on, it provides four levels of noise reduction. It can be adjusted for the best balance of noise reduction and voice quality possible, considering the store's environment.

- Locate the S1 switch near the bottom-right of the base station audio circuit board. Refer to Figure 24 on page 29.
- To turn the noise reduction feature on, place the S1 switch position 2 ON.
- Check the inbound background noise levels and voice quality with S1 switch positions 3 and 4 in the various ON/OFF combinations shown below until the desired noise level and voice quality are attained.

ClearSound Noise Reduction Adjustments				
	12dB reduction (maximum)	**9 dB reduction**	**6dB reduction**	**3 dB reduction (minimum)**
S1 – 3	OFF	OFF	ON	ON
S1 – 4	OFF	ON	OFF	ON

S1 – 1 = VAA ON/OFF
S1 – 2 = ClearSound ON/OFF

3.3 OPERATION

The COM6000BP can be operated in Hands-Free (HF), Auto-Hands-Free (AHF) or Push-To-Talk (PTT) modes. If your store does not have HF capability, the Wireless 6000 should be operated according to section **III. A. 3.** below in single-lane stores, or section **III. B. 3.** (page 9) in dual-lane stores.

A full-duplex system supports HF, AHF and PTT operation. Communication can be transmitted and received at the same time, as in a normal telephone conversation. In the AHF mode, transmission and reception are activated automatically when a customer drives into the drive-thru lane. In the HF mode, transmission and reception are activated by touching and releasing one of the **A** buttons on the Communicator. In the PTT mode, one of the **A** buttons on the Communicator must be held while the operator is talking to the customer. A half-duplex system only supports the PTT mode. One of the **A** buttons on the Communicator must be held while the operator speaks to the customer. The customer's voice will not be heard while the operator is transmitting.

When a customer arrives in the drive-thru lane, you will hear a single beep in the headset for single lane operations and for Lane 1 in dual-lane operations, or a double beep for Lane 2 in dual-lane operations. In dual-lane operation, if you are communicating with a customer when another customer arrives in the opposite lane, a higher pitch double beep will sound in the headset. When the first customer leaves the speaker post, the same high pitch double beep will repeat in your headset every four seconds until you touch the **A1** or **A2** button to communicate with the second customer.
NOTE: In dual-lane operations, if you have a Mode Switch and it is in the "2 OPERATORS" position, you will only hear single beeps in your headset when customers arrive in the lane you are operating.

3.3.1 Single-Lane Operation (one base station operating one speaker post)

1. Hands-Free (HF) Mode:

With the power off, press and hold the volume-up ▲ and **B** buttons while pressing and releasing the **PWR** button to turn the power on in the HF mode. The Communicator will remember this setting.
As a customer enters the drive-thru lane, you will hear an alert tone (single beep) in your headset, and you will be able to hear the customer at the speaker post or menu board.
Use volume-up ▲ or down ▼ buttons to adjust customer's voice level in headset if necessary.
Touch and release **A1** or **A2** button to speak and listen to customer.
Touch and release **A1**, **A2** or **B** button to end communication with customer.
Touch and release **A1** or **A2** button if you want to speak to the customer again.
If customer drives away from speaker post or menu board, the Communicator stops transmitting.

2. Auto Hands-Free (AHF) Mode:

NOTES: Only one Communicator operator at a time can use this feature. If a Communicator is turned off while in the AHF mode, it will automatically be reset for its previous operating mode.
With the power off, press and hold the volume-up ▲ and **A1** buttons while pressing and releasing the **PWR** button to turn the power on in the AHF mode.
As a customer enters the drive-thru lane, you will hear an alert tone (single beep) in your headset, and you will be able to hear the customer at the speaker post or menu board.
Use volume-up ▲ or down ▼ buttons to adjust customer's voice level in headset if necessary.
Speak and listen to customer without pressing any buttons.
Touch and release **A1**, **A2** or **B** button to end communication with customer.
Touch and release **A1** or **A2** button if you want to speak to the customer again.
If customer drives away from speaker post or menu board, the Communicator stops transmitting.

3. Push-To-Talk (PTT) Mode:

With the power off, press and hold the volume-down ▼ and **B** buttons while pressing and releasing the **PWR** button to turn the power on in the PTT mode. The Communicator will remember this setting.
As a customer enters the drive-thru lane, you will hear an alert tone (single beep) in your headset, and you will be able to hear the customer at the speaker post or menu board.
Use volume-up ▲ or down ▼ buttons to adjust customer's voice level in headset if necessary.
Touch and hold **A1** or **A2** button to speak to customer. Release when finished.

3.3.2 Dual-Lane Operation (two base stations operating two speaker posts)

1. Hands-Free (HF) Mode:

With the power off, press and hold the volume-up ▲ and **B** buttons while pressing and releasing the **PWR** button to turn the power on in the HF mode. The Communicator will remember this setting.
As a customer enters a drive-thru lane, you will hear an alert tone (single beep for Lane 1, double beep for Lane 2) in your headset, and you will be able to hear the customer at the speaker post or menu board if that lane is selected.
Use volume-up ▲ or down ▼ buttons to adjust customer's voice level in headset if necessary.
Touch and release **A1** button for Lane 1 or **A2** for Lane 2, to speak and listen to customer.
Touch and release **A1**, **A2** (depending on lane) or **B** button to end communication with customer.
Touch and release **A1** button for Lane 1 or **A2** for Lane 2, to speak to the customer again.
To change lanes, touch and release the opposite **A** button.
If customer drives away from speaker post or menu board, Communicator stops transmitting.

2. Auto Hands-Free (AHF) Mode:

NOTES: Only one Communicator operator at a time, in each lane, can use this feature. If an operator attempts to configure a second Communicator, "System busy" will be heard in his headset. When operating in the AHF mode, changing lanes is not possible. If a Communicator is turned off while in the AHF mode, it will automatically be reset for its previous operating mode.

For **Lane 1** operation, with the power off, press and hold the volume-up ▲ and **A1** buttons while pressing and releasing the **PWR** button to turn the power on in the AHF mode.
For **Lane 2** operation, with the power off, press and hold the volume-up ▲ and **A2** buttons while pressing and releasing the **PWR** button to turn the power on in the AHF mode.
As a customer enters a drive-thru lane, you will hear an alert tone (single beep for Lane 1, double beep for Lane 2) in your headset, and you will be able to hear the customer at the speaker post or menu board if that lane is selected.
Use volume-up ▲ or down ▼ buttons to adjust customer's voice level in headset if necessary.
Speak and listen to customer without pressing any buttons.
Touch and release **A1**, **A2** (depending on lane) or **B** button to end communication with customer.
Touch and release **A1** button for Lane 1 or **A2** for Lane 2, to speak to the customer again.
If customer drives away from speaker post or menu board, Communicator stops transmitting.

3. Push-To-Talk (PTT) Mode:

With the power off, press and hold the volume-down ▼ and **B** buttons while pressing and releasing the **PWR** button to turn the power on in the PTT mode. The Communicator will remember this setting.
As a customer enters a drive-thru lane, you will hear an alert tone (single beep for Lane 1, double beep for Lane 2) in your headset, and you will be able to hear the customer at the speaker post or menu board if that lane is selected.
Use volume-up ▲ or down ▼ buttons to adjust customer's voice level in headset if necessary.
Touch and hold **A1** button to speak to customer in Lane 1; **A2** to speak to customer in Lane 2.

NOTE: To communicate internally with another COM6000BP user, press and hold the **B** button while talking. Release to listen. In dual-lane operations, up to three Communicator operators can have conference-call type communication by all pressing the **A1**, **A2** or **B** button. Everyone pressing the same button will be heard by everyone else on that channel without interference. If the system is set up for Split-B operation (See section 2.3.10), internal communication will only be heard by operators in the same lane. If Split-B operation is not selected, internal communication will be heard by all Communicator operators in both lanes. Pressing button **B** will not interrupt same-lane communication, but **B** channel communication will be heard by the operator of the other lane. If a car arrives in the drive-thru lane while internal communication is taking place, priority will be given to one **A** channel for customer communication, which will reduce the number of internal communication channels available.

3.3.3 Speed-Team Operation

Speed-team operation is used during high-volume times. An order taker wearing a COM6000BP Communicator relays orders from outside into the store, using button **B** on the Communicator. Placing the speed-team switch, on the base station, in the ON position will disable the outside speaker/microphone and the vehicle-alert tone.

3.3.4 Message Repeater Operation

ACTION		RESULT
To record Red Message	Press and release the RECORD MODE button on the base station **once**.	The **RED** MESSAGE RECORD light on the base station will come on.
	Press and hold button **B** on the COMMUNICATOR® and talk into the headset microphone to record a message (up to 8 seconds).	The MESSAGE RECORD light on the base station will begin blinking.
	Release button **B**.	The record function will stop and the MESSAGE RECORD light will go off.
To record Green Message	Press and release the RECORD MODE button on the base station **twice**.	The **GREEN** MESSAGE RECORD light on the base station will come on.
	Press and hold button **B** on the Communicator and talk into the headset microphone to record a message (up to 8 seconds).	The MESSAGE RECORD light on the base station will begin blinking.
	Release button **B**.	The record function will stop and the MESSAGE RECORD light will go off.

Locate the "RED MESSAGE" and "GREEN MESSAGE" slide switches, and the "RED MESSAGE CONTROL" and "GREEN MESSAGE CONTROL" DIP switches inside the front door of the base station for the following settings.

RED MESSAGE switch in the **ON** position enables the "RED MESSAGE" to be played.
A playing message can be cancelled by pressing Communicator button **A**.

RED MESSAGE CONTROL

Switch 1 enables inbound audio from speaker post to be heard while message is playing.
Switch 2 enables message to be played to all Communicators.
Switch 3 enables message to be played on the outside speaker.
Switch 4 enables message to be played on the ceiling speaker.
Switch 5 causes message to be triggered by an external alert signal.
Switches 6, 7 and 8 not used

GREEN MESSAGE switch in the **ON** position enables the "GREEN MESSAGE" to be played.
A playing message can be cancelled by pressing Communicator button **A**.

GREEN MESSAGE CONTROL

Switch 1 enables inbound audio from speaker post to be heard while message is playing.
Switch 2 enables message to be played to all Communicators.
Switch 3 enables message to be played on the outside speaker.
Switch 4 enables message to be played on the ceiling speaker.
Switch 5 causes message to be triggered by an external alert signal.
Switch 6 causes a 3 second delay before message is played.
Switch 7 not used
Switch 8 allows selection of a single-beep alert tone or two short beeps.

If both RED MESSAGE and GREEN MESSAGE switches are in the ON position, Red Message and Green Message will be played alternately.

After a new message has been recorded or after the base station has lost and regained power, any message to the outside speaker will always be heard in the Communicator headset the first three times it plays.

3.4 IN CASE OF PROBLEMS

PROBLEM	PROBABLE CAUSE	SOLUTION
No sound is heard in COMMUNICATOR® headset when you press button **A** and speak into microphone.	Power may be off at base station.	Check circuit breaker for building.
	Power supply in base station may not be working.	Check power supply indicator lights on base station. If no light is lit, be certain AC power adapter is plugged into AC electrical outlet, and is connected to J29 on base station audio circuit board.
	Communicator power may not be on.	Press Power ON/OFF button on Communicator. Be certain power light goes on and switches from red to green.
	Volume may not be set correctly.	Adjust volume with Volume-up and down buttons.
	Battery may be low or defective.	Check Power light. If not lit, replace battery.
	Headset may be defective.	Use another headset. Call HME. *
Communicator channel **A** or **B** is not working.	Communicator power may not be on.	Press Power ON/OFF button on Communicator. Be certain power light goes on.
	Battery may be low or defective.	Check Power light. If not lit, replace battery.
	"A" Talk or "**B" Talk** light on base station does not light when button **A** or **B** on Communicator is pressed.	Use another Communicator. Call HME. *
Outbound sound is too low.	Outbound volume may be set too low for environment.	Turn outside speaker volume control, on front panel of base station, clockwise until volume is satisfactory.
No outbound sound; Customer cannot hear anything.	System may be set for speed-team operation.	Be certain SPEED TEAM button on base station is in OFF position.
	There may be loose wires on outside speaker or base station circuit board.	Check VEHICLE PRESENT light on base station. Check outside speaker wire connections in base station and at outside speaker.
	Speaker or base station may be defective.	Call HME. *
Customer cannot be heard in push-to-talk (PTT) operation.	System may be set for speed-team operation.	Be certain SPEED TEAM button on base station is in OFF position.
	Base station may be set for wrong drive-thru mode (full or half-duplex).	Check S6 DIP switch #1 at bottom of base station audio circuit board. It should be ON for full-duplex, OFF for half-duplex operation.
Only intermittent voice can be heard in headsets.	Transmitter antenna connectors on base station transceiver circuit board may be loose or damaged.	Be certain antennas are screwed securely onto base station. Check antenna cable connections near lower-left corner of transceiver circuit board. Pull and remove each connector plug, and check to be certain pin inside it is not bent. If not, call HME. *
	Circuit board may be defective.	Call HME. *

PROBLEM	PROBABLE CAUSE	SOLUTION
Personnel hear customers in ceiling speaker or headsets, but cannot hear each other.	Circuit board may be defective.	Check to see if status lights on base station are lit. Call HME. *
	Beltpac may be defective.	Use another beltpac. Call HME. *
No tone or sound is heard in ceiling speaker or headsets when vehicle enters drive-thru lane.	Power interruption may have caused vehicle detection circuit to be out of balance.	When no vehicle is in the drive-thru lane, slide the vehicle detector override switch on the base station to the OVERRIDE position, then back to the NORMAL position.
	System may be set for speed-team operation.	Be certain SPEED TEAM switch on the front panel of the base station is in OFF position.
	Connector may be loose.	Check all connectors in base station. Call HME. *
Personnel cannot hear customers in ceiling speaker or headsets.	There may be loose wires on base station circuit board.	Check all connections on base station circuit boards.
	System may be set for speed-team operation.	Be certain SPEED TEAM switch on base station is in OFF position.
	Outside speaker or audio circuit board may have failed.	Call HME. *
Headset has intermittent sound.	Battery may be low.	Replace battery.
	Headset may be defective.	Use another headset. Call HME. *
There is still sound in headset after all customers have been served.	VEHICLE DETECT switch on base station may be in the OVERRIDE position.	Be certain switch is in the NORMAL position.
	Vehicle detector may be locked up.	Slide VEHICLE DETECT switch back and forth twice.
Battery charger is not working.	Charger may not be plugged in.	Be certain charger is plugged in. If it still is not working, call HME. *
Red or Green message will not play.	Switch not on.	Be certain respective Red or Green message repeater switch on base station is in the ON position.
Registration of COMMUNICATOR® failed. "Registration failed" message heard in headset. Lights stay red.	Base station power not on. Communicator **B** button not pushed when powering up. Registration button not pushed.	Repeat registration procedure on page 5. Call HME. *

* For assistance, call HME at 1-800-848-4468, or Fax 858-552-0172.

2400MHz cordless telephone interference —
If there is a 2400MHz cordless telephone nearby, interference may occur. However, because the Wireless 6000 is a frequency-hopping system, this problem is unlikely. If it does occur, changing frequencies on the telephone may alleviate the problem. If not, move the phone as far as practical from the base station, or ask the customer to use another type phone. Call HME Customer Support at 1-800-848-4468 if assistance is required.

In the event of an electrical power outage —
such as from a lightning storm or power generator failure, if you experience problems with your HME equipment after the electricity comes on again, unplug the AC power adapters from their electrical outlets and wait 15 seconds, then plug them back in.

IMPORTANT
Before completing this installation, be certain all DIP switches, jumpers and adjustments are set appropriately.

To Underground Loop

TB1

Vehicle Detector Board (VDB)
optional

P1

S1

to J30, 3, 7 & 8 (3 = shield)

Outside Speaker/ Microphone

Alternate Greet Wiring
Connect timer ground to base audio J2, 1. Connect an unused Vehicle Detect input (1-6) to base audio J2, 2. Assign the Vehicle (1-6) as GREET and configure for negative detection.

to J2, 2 "A" Decode (Active Low)

To Message Repeater
to J2, 3 Isolated Vehicle Detect Signal
to J2, 4 Isolated Vehicle Detect Ground

to J2, 6=gn, 7=wh & 8=shld

to J29, 1 & 2

Grill Speaker (optional)

16.5 VAC Adapter

NOTE: J22, 1 to J26, 1; J22, 2 to J26, 2; etc.

Interconnect cable wires 1, 2 & 6

Base station interconnect cable connections for dual-lane systems not using a mode switch

Connections at J26 in Secondary Base Station

Vehicle Detect In	1*
Vehicle Detect Out	2*
/A2 - Talk	3
/B2 - Talk	4
Car 2	5
Ground	6*
Transmitter Audio A2	7
Ground	8
Receiver Audio A2	9
Receiver Audio B2 (B1+B2)	10

* **NOTE:** If using a mode switch between two base stations, the vehicle detect wires and a ground wire at each end of the base station interconnect cable must be broken out of the cable and connected to J22 in the Primary Base Station and J26 in the Secondary Base Station as shown below. If no mode switch is used, the vehicle detect wires will remain connected as shown above.

Base station interconnect cable connections for dual-lane systems if using a mode switch

MS1000 Mode Switch
(optional with dual-lane systems)

Primary Base: VEH DETECT OUT, NOT USED, GROUND, VEH DETECT IN → J22 (Shld)
S1: NC NC NC NC
Secondary Base: VEH DETECT OUT, NOT USED, GROUND, VEH DETECT IN → J26

J26 J22 J25 J28 J18 S2 R9 R320 R348 R292 R368 R42 R43 JP4 JP3 JP5 JP2 JP1 J5 J30 J2 J29 J10 J15 J9 S1 S6 DS7 DS6 DS5 DS4 DS10 DS9 DS2 DS3 DS8 K1 K2 K3 K4 Ant 2 Ant 1

Transceiver Board

Shield

Audio Circuit Board

J9 - Input/Output

to J9, 1	Early Warning In (Active Low)
to J9, 2	Ground
to J9, 3	Service Window In (Active Low)
to J9, 4	Alert In Ground
to J9, 5	Alert In (+12V From System 30 Timer)

Wiring Diagram for Alert Input other than from Timer

Relay
Relay activated by some other device
N/O — J9
Common — J30

Wiring Diagram
Wireless 6000, Half-Duplex
with VDB but no Switcher Board

Figure 20.

IMPORTANT
Before completing this installation, be certain all DIP switches, jumpers and adjustments are set appropriately.

Outside Speaker/ Microphone

to J2, 3, 4 & 5 (3 is for shield)

To Timer System

- Positive Vehicle Detect Signal (+11V Minimum) — to J3, 10
- Ground — to J3, 9
- Negative Vehicle Detect Signal — to J3, 8
- Greet — to J3, 7
- Greet — to J3, 6

NOTE: If using the Internal Message Repeater, do not use J3 pins 6 & 7 for Greet. See ALTERNATE GREET WIRING.

From External Detector

- Negative Vehicle Detect Signal — to J3, 5
- Ground — to J3, 4
- Positive Vehicle Detect Signal (+11V Minimum) (When not using optional VDB) — to J3, 3

To Backup System

- Negative Vehicle Detect Signal — to J4, 3
- Ground — to J4, 4
- Positive Vehicle Detect Signal (+11V Minimum) — to J4, 5
- Speaker/Microphone — to J4, 7
- Speaker/Microphone — to J4, 8

Switcher Board optional

Vehicle Detector Board (VDB) optional

To Underground Loop

Alternate Greet Wiring
Connect timer ground to base audio J2, 1. Connect an unused Vehicle Detect input (1-6) to base audio J2, 2. Assign the Vehicle (1-6) as GREET and configure for negative detection.

- to J2, 2 — "A" Decode (Active Low)

To Message Repeater

- to J2, 3 — Isolated Vehicle Detect Signal
- to J2, 4 — Isolated Vehicle Detect Ground

Base station interconnect cable connections for dual-lane systems not using a mode switch

Connections at J26 in Secondary Base Station

- 1* Vehicle Detect In
- 2* Vehicle Detect Out
- 3 /A2 - Talk
- 4 /B2 - Talk
- 5 Car 2
- 6* Ground
- 7 Transmitter Audio A2
- 8 Ground
- 9 Receiver Audio A2
- 10 Receiver Audio B2 (B1+B2)

NOTE: J22, 1 to J26, 1; J22, 2 to J26, 2; etc.

Interconnect cable wires 1, 2 & 6

* **NOTE:** If using a mode switch between two base stations, the vehicle detect wires and a ground wire at each end of the base station interconnect cable must be broken out of the cable and connected to J22 in the Primary Base Station and J26 in the Secondary Base Station as shown below. If no mode switch is used, the vehicle detect wires will remain connected as shown above.

Base station interconnect cable connections for dual-lane systems if using a mode switch

MS1000 Mode Switch
(optional with dual-lane systems)

Primary Base — J22
- VEH DETECT OUT
- NOT USED
- GROUND
- VEH DETECT IN
- Shld

S1: NC NC NC NC

Secondary Base — J26
- VEH DETECT OUT
- NOT USED
- GROUND
- VEH DETECT IN

to J2, 6=gn, 7=wh & 8=shld

to J29, 1 & 2

Grill Speaker (optional)

16.5 VAC Adapter

Transceiver Board

Audio Circuit Board

J9 - Input/Output

- to J9, 1 — Early Warning In (Active Low)
- to J9, 2 — Ground
- to J9, 3 — Service Window In (Active Low)
- to J9, 4 — Alert In Ground
- to J9, 5 — Alert In (+12V From System 30 Timer)

Wiring Diagram for Alert Input other than from Timer

Relay — Relay activated by some other device

N/O — J9 — Common — J30

Wiring Diagram
Wireless 6000, Half-Duplex
with VDB and Switcher Board

Figure 21.

IMPORTANT
Before completing this installation, be certain all DIP switches, jumpers and adjustments are set appropriately.

IMPORTANT
MICROPHONE AND SPEAKER MUST USE SEPARATE CABLES

Outside Speaker
(SP2500LP or OTHER)
to J30, 3, 7 & 8 (3 = shield)

From External Detector
to J30, 3 = Ground
to J30, 5 = Negative Vehicle Detect Signal
(When not using optional VDB)

Outside Microphone
(DM3 or other than DM1))
to J30, 1, 2 & 3 (3 = shield)

To Underground Loop

Alternate Greet Wiring
Connect timer ground to base audio J2, 1. Connect an unused Vehicle Detect input (1-6) to base audio J2, 2. Assign the Vehicle (1-6) as GREET and configure for negative detection.

to J2, 2 "A" Decode (Active Low)

To Message Repeater
to J2, 3 Isolated Vehicle Detect Signal
to J2, 4 Isolated Vehicle Detect Ground

to J2, 6=gn, 7=wh & 8=shld

to J29, 1 & 2

Grill Speaker (optional)

16.5 VAC Adapter

Base station interconnect cable connections for dual-lane systems not using a mode switch

Connections at J26 in Secondary Base Station

Vehicle Detect In	1*
Vehicle Detect Out	2*
/A2 - Talk	3
/B2 - Talk	4
Car 2	5
Ground	6*
Transmitter Audio A2	7
Ground	8
Receiver Audio A2	9
Receiver Audio B2 (B1+B2)	10

NOTE: J22, 1 to J26, 1; J22, 2 to J26, 2; etc.

Interconnect cable wires 1, 2 & 6

* **NOTE:** If using a mode switch between two base stations, the vehicle detect wires and a ground wire at each end of the base station interconnect cable must be broken out of the cable and connected to J22 in the Primary Base Station and J26 in the Secondary Base Station as shown below. If no mode switch is used, the vehicle detect wires will remain connected as shown above.

Base station interconnect cable connections for dual-lane systems if using a mode switch

MS1000 Mode Switch
(optional with dual-lane systems)

Primary Base — J22
VEH DETECT OUT
NOT USED
GROUND
VEH DETECT IN
Shld

S1: NC NC NC NC

Secondary Base — J26
VEH DETECT OUT
NOT USED
GROUND
VEH DETECT IN

J9 - Input/Output

to J9, 1	Early Warning In (Active Low)
to J9, 2	Ground
to J9, 3	Service Window In (Active Low)
to J9, 4	Alert In Ground
to J9, 5	Alert In (+12V From System 30 Timer)

Wiring Diagram for Alert Input other than from Timer

Relay
Relay activated by some other device
N/O — J9
Common — J30

Vehicle Detector Board (VDB)
optional
TB1
P1
S1

Transceiver Board
J26 J22 J25 J28 J18 S2 R9 R320 R348 R292 R368 JP2 JP1 K1 K2 K3 K4 Shield Ant 2 Ant 1
DS7 DS6 DS5 DS4 DS10 DS9 DS2 DS3

Audio Circuit Board
J5 J30 J2 J29 R42 R43 JP4 JP3 JP5 J10 J15 J9 DS8 S1 S6

Wiring Diagram
Wireless 6000, Full-Duplex
with VDB but no Switcher Board

Figure 22.

Outside Microphone
(DM3 or other than DM1))

to J2, 1, 2 & 3

IMPORTANT
MICROPHONE AND SPEAKER MUST USE SEPARATE CABLES

IMPORTANT
Before completing this installation, be certain all DIP switches, jumpers and adjustments are set appropriately.

To Timer System

Positive Vehicle Detect Signal (+11V Minimum) — to J3, 10
Ground — to J3, 9
Negative Vehicle Detect Signal — to J3, 8
Greet — to J3, 7
Greet — to J3, 6

NOTE: If using the Internal Message Repeater, do not use J3 pins 6 & 7 for Greet. See ALTERNATE GREET WIRING.

From External Detector

Negative Vehicle Detect Signal — to J3, 5
Ground — to J3, 4
Positive Vehicle Detect Signal (+11V Minimum) (When not using optional VDB) — to J3, 1 & 2

Outside Speaker
(SP2500LP or OTHER)

To Backup System

Speaker — to J4, 1
Speaker — to J4, 2
Negative Vehicle Detect Signal — to J4, 3
Ground — to J4, 4
Positive Vehicle Detect Signal (+11V Minimum) — to J4, 5
Microphone — to J4, 7
Microphone — to J4, 8

Switcher Board optional

Vehicle Detector Board (VDB) optional

To Underground Loop

Alternate Greet Wiring

Connect timer ground to base audio J2, 1. Connect an unused Vehicle Detect input (1-6) to base audio J2, 2. Assign the Vehicle (1-6) as GREET and configure for negative detection.

to J2, 2 — "A" Decode (Active Low)

To Message Repeater

to J2, 3 — Isolated Vehicle Detect Signal
to J2, 4 — Isolated Vehicle Detect Ground

Grill Speaker (optional)

to J2, 6=gn, 7=wh & 8=shld
to J29, 1 & 2

16.5 VAC Adapter

Base station interconnect cable connections for dual-lane systems not using a mode switch

Connections at J26 in Secondary Base Station

1* Vehicle Detect In
2* Vehicle Detect Out
3 /A2 - Talk
4 /B2 - Talk
5 Car 2
6* Ground
7 Transmitter Audio A2
8 Ground
9 Receiver Audio A2
10 Receiver Audio B2 (B1+B2)

NOTE: J22, 1 to J26, 1; J22, 2 to J26, 2; etc.

Interconnect cable wires 1, 2 & 6

* **NOTE:** If using a mode switch between two base stations, the vehicle detect wires and a ground wire at each end of the base station interconnect cable must be broken out of the cable and connected to J22 in the Primary Base Station and J26 in the Secondary Base Station as shown below. If no mode switch is used, the vehicle detect wires will remain connected as shown above.

Base station interconnect cable connections for dual-lane systems if using a mode switch

MS1000 Mode Switch
(optional with dual-lane systems)

Primary Base — J22
VEH DETECT OUT
NOT USED
GROUND
VEH DETECT IN
Shld

S1 NC NC NC NC

Secondary Base — J26
VEH DETECT OUT
NOT USED
GROUND
VEH DETECT IN

Transceiver Board

Audio Circuit Board

J9 - Input/Output

to J9, 1 — Early Warning In (Active Low)
to J9, 2 — Ground
to J9, 3 — Service Window In (Active Low)
to J9, 4 — Alert In Ground
to J9, 5 — Alert In (+12V From System 30 Timer)

Wiring Diagram for Alert Input other than from Timer

Relay
Relay activated by some other device
N/O
Common
J9
J30

Wiring Diagram
Wireless 6000, Full-Duplex
with VDB and Switcher Board

Figure 23.

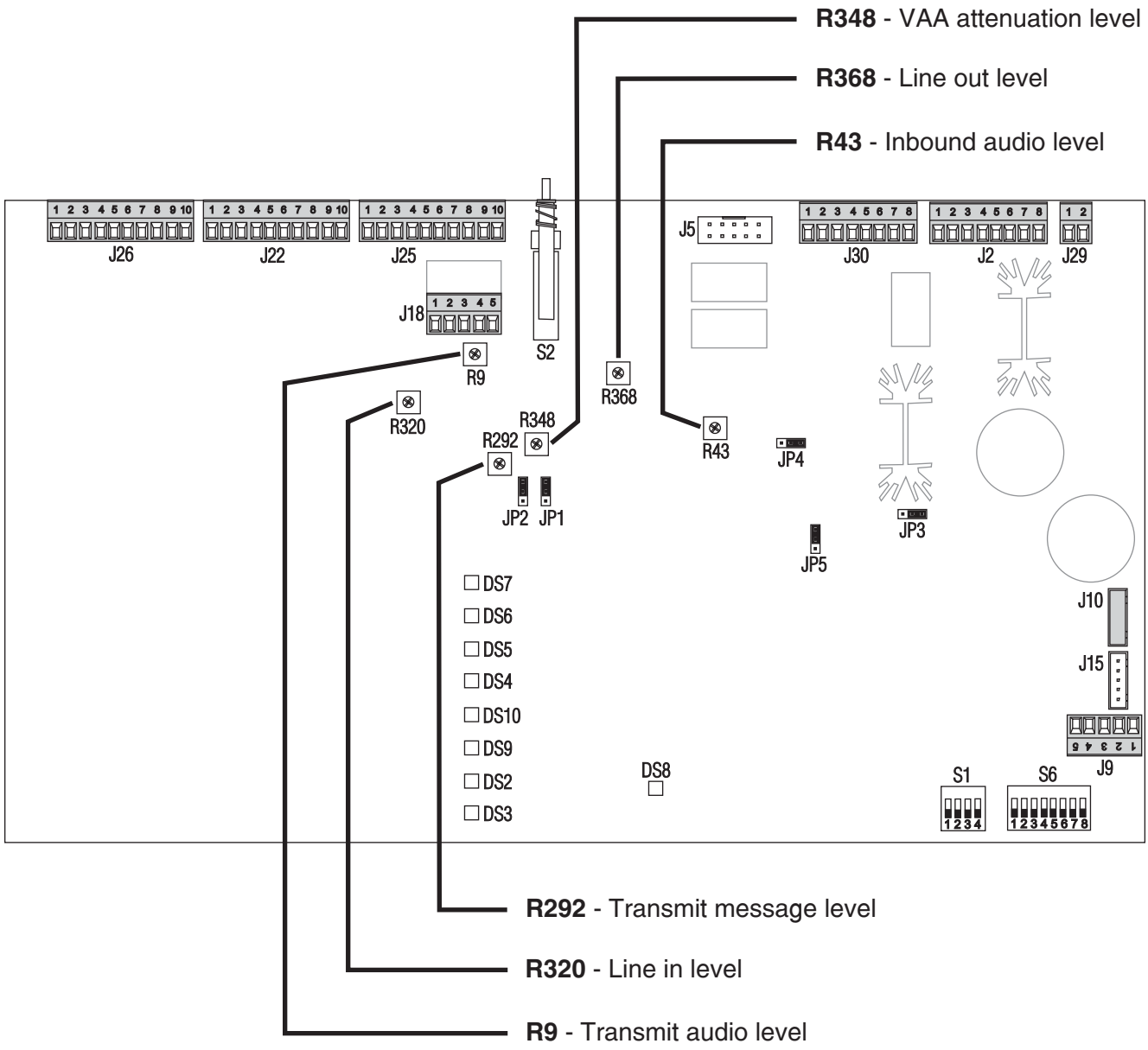

Figure 24.

Wireless 6000
Base Station Circuit Board
Adjustments (one side only)

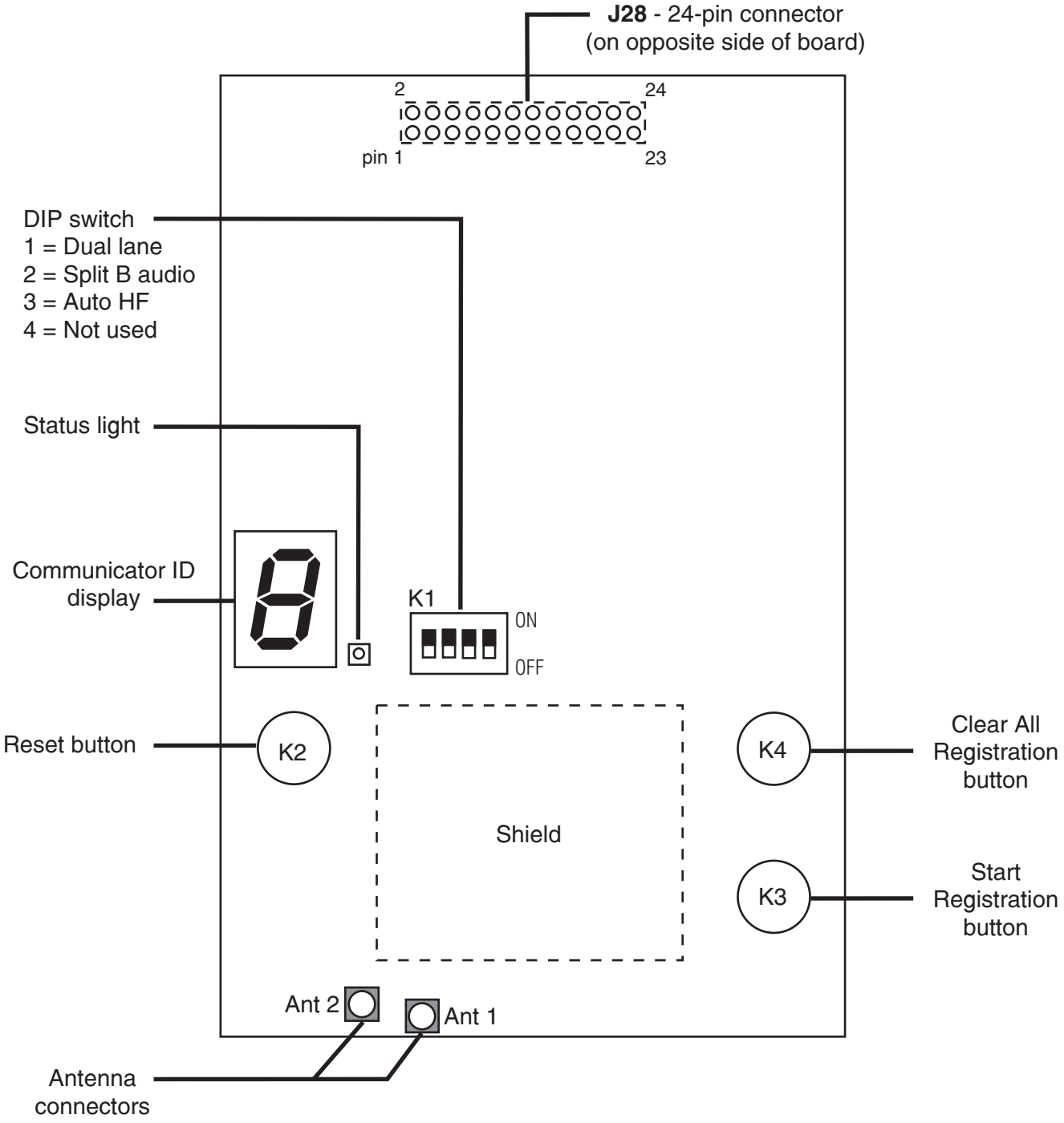

Figure 25.

Wireless 6000 Transceiver Board Adjustments, Connectors and Indicators (one side only)

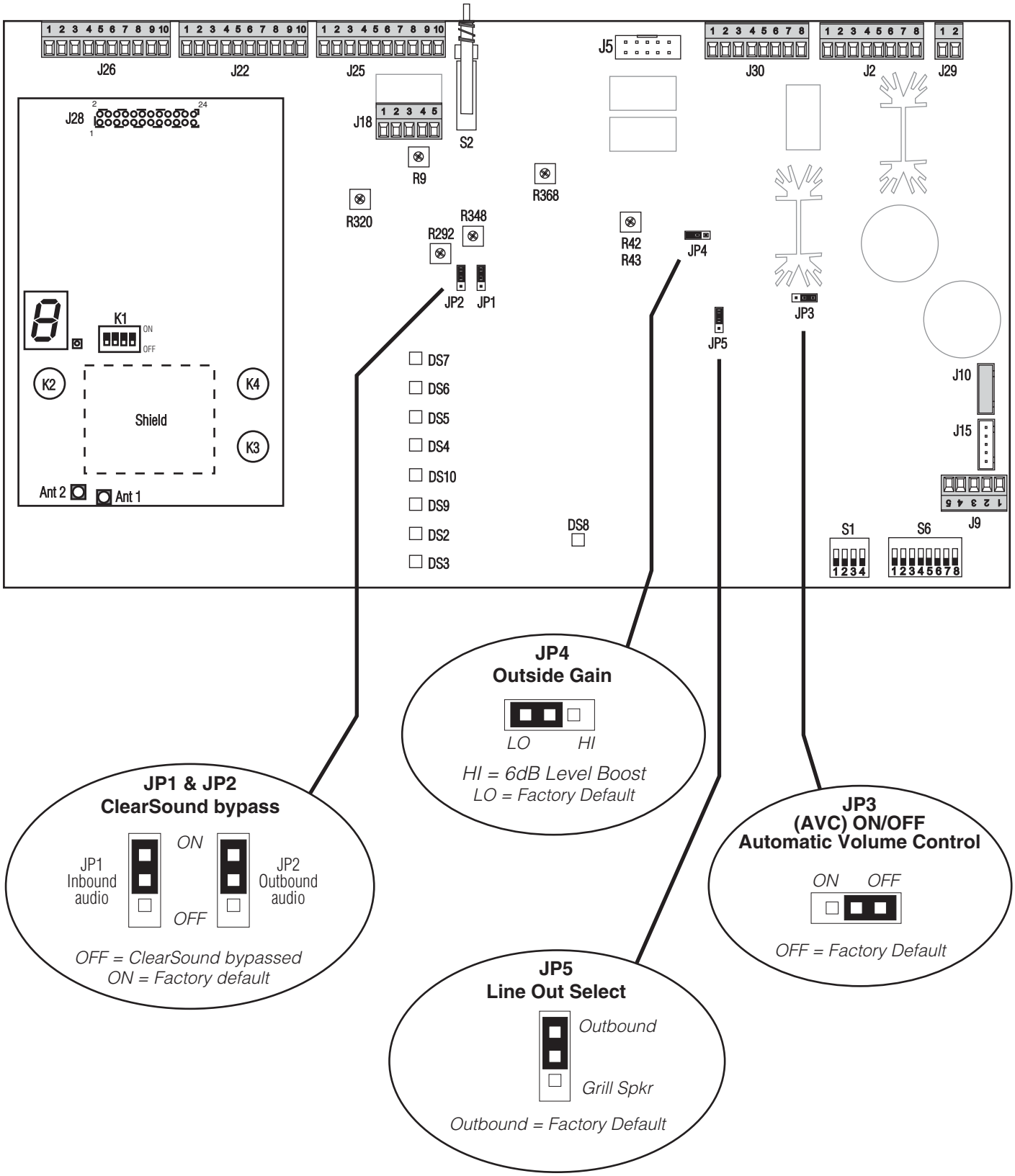

Figure 26.

Wireless 6000
Base Station Circuit Board
Jumpers

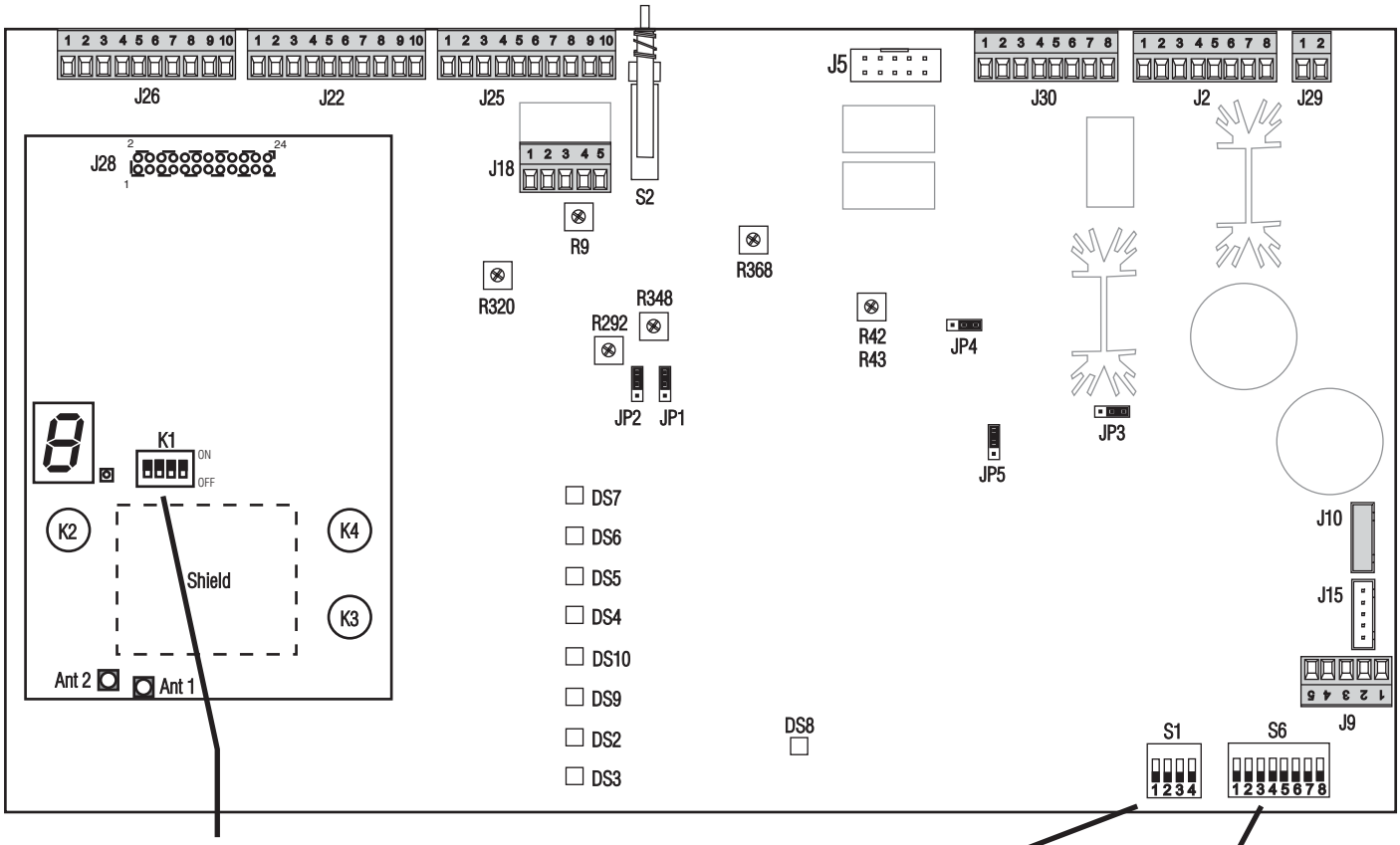

K1 – Switch Functions

Switch	Function
1	ON – Dual lane operation ON OFF – Dual lane operation OFF
2	ON – Split-B audio ON OFF – Split-B audio OFF
3	ON – Auto Hands Free operation ON OFF – Auto Hands Free OFF
4	Not used

S1 – VAA and ClearSound

Switch	Function
1	ON – VAA active OFF – VAA not active
2	ON – ClearSound active OFF – ClearSound not active

When ClearSound is active, it provides four levels of noise reduction, which can be selected by placing switches 3 and 4 in the OFF/ON positions shown below. Level 1 provides maximum and Level 4 provides minimum noise reduction.

	Level 1 12dB	Level 2 9dB	Level 3 6dB	Level 4 3dB
3	OFF	OFF	ON	ON
4	OFF	ON	OFF	ON

S6 – Switch Functions

Switch	Function
1	ON – **Full-Duplex** operation OFF – **Half-Duplex** operation
2	ON – Headset “A” audio played over ceiling speaker OFF – Headset “A” audio **NOT** played over ceiling speaker
3	ON – Headset “B” audio played over ceiling speaker OFF – Headset “B” audio **NOT** played over ceiling speaker
4	ON – Inbound audio from drive-thru lane played over ceiling speaker OFF – Inbound audio from drive-thru lane **NOT** played over ceiling speaker
5	ON – Vehicle present tone played over ceiling speaker OFF – Vehicle present tone **NOT** played over ceiling speaker
6	ON – Vehicle early warning tone played over ceiling speaker OFF – Vehicle early warning tone **NOT** played over ceiling speaker
7	ON – Vehicle present tone repeats every 4 seconds until “A” button is pushed OFF – Vehicle present tone plays only once
8	ON – Vehicle present tone allowed to play when vehicle arrives OFF – Vehicle present tone **NOT** allowed to play when vehicle arrives

Figure 27.

Wireless 6000
Base Station Circuit Board
DIP Switch Functions

APPENDIX A: BASE 6000 INTERFACE DESCRIPTION

Audio Circuit Board

J2 – Speaker In/Out

J2,1 Ground
J2,2 /A Talk
J2,3 Relay 1 Common
J2,4 Relay 1 Normally Open
J2,5 Relay 1 Normally Closed
J2,6 Ceiling speaker +
J2,7 Ceiling speaker –
J2,8 Ground

J5 – Switcher Board Interface

J5,1 Microphone 1
J5,2 Microphone 2
J5,3 Ground
J5,4 +12VDC
J5,5 Not used
J5,6 Negative vehicle detect input
J5,7 Vehicle detector power
J5,8 Not used
J5,9 Outside speaker –
J5,10 Outside speaker +

J30 – Menu Board Interface (Without Switcher Board)

J30,1 Microphone 1
J30,2 Microphone 2
J30,3 Ground
J30,4 +12VDC
J30,5 Negative vehicle detect input
J30,6 Aux Negative vehicle detect input
J30,7 Outside speaker –
J30,8 Outside speaker +

J22 – Secondary Base Station Interface Connector

J22,1 Vehicle detect input
J22,2 Vehicle detect output
J22,3 /A2 Talk
J22,4 /B2 Talk
J22,5 Car 2
J22,6 Ground
J22,7 TX Audio 2
J22,8 Ground
J22,9 RX Audio A2
J22,10 RX Audio B2 or B1 + B2

J26 – Primary Base Station Interface Connector

J26,1 Vehicle detect output
J26,2 Vehicle detect input
J26,3 /A2 Talk
J26,4 /B2 Talk
J26,5 Car 2
J26,6 Ground
J26,7 TX Audio 2
J26,8 Ground
J26,9 RX Audio A2
J26,10 RX Audio B2 or B1 + B2

J11 – Transceiver Interface

J11,1 +5V Xcvr
J11,2 Power Ground
J11,3 Not used
J11,4 Power Ground
J11,5 Not used
J11,6 /A1 Talk
J11,7 TX Audio 1
J11,8 /B1 Talk
J11,9 Ground
J11,10 Car 1
J11,11 RX Audio A1
J11,12 Ground
J11,13 Ground
J11,14 Not used
J11,15 RX Audio B1 or B1 + B2
J11,16 TX Audio 2
J11,17 /A2 Talk
J11,18 Ground
J11,19 /B2 Talk
J11,20 RX Audio A2
J11,21 Car 2
J11,22 Ground
J11,23 Ground
J11,24 Rx Audio B2 or B1 + B2

J1 – ATE Connector (not installed)

J1,1 Microphone 1
J1,2 Microphone 2
J1,3 /Vehicle 2 tone force
J1,4 /Vehicle present
J1,5 Vehicle detector power
J1,6 /Vehicle 1 tone
J1,7 Receive Audio B1
J1,8 B Talk
J1,9 Power ground
J1,10 +5 VDC
J1,11 +5 xcvr
J1,12 +12 VDC
J1,13 A Talk
J1,14 Not used
J1,15 +22 VDC
J1,16 Ceiling speaker output
J1,17 RX audio A1

J1,18 TX/RX audio ground
J1,19 TX audio 1
J1,20 Not used

JP2 – ClearSound Bypass Jumper
JP2,1 Audio channel 2 input
JP2,2 Outbound Audio
JP2,3 Audio channel 2 output

JP1 – ClearSound Bypass Jumper
JP1,1 Audio channel 1 input
JP1,2 Inbound Audio
JP1,3 Audio channel 1 output

J10 – Vehicle Detector Board Interface 1 (Primary)
J10,1 Negative vehicle detect signal
J10,2 Vehicle detector power
J10,3 Ground
J10,4 Not used
J10,5 Not used

JP3 – Automatic Volume Control Jumper
JP3,1 AVC speaker in
JP3,2 Outbound audio
JP3,3 ACV speaker out

JP4 – Outbound Gain Control Jumper
JP4,1 Jumper HIGH
JP4,2 Jumper common
JP4,3 Jumper LOW

J9 – Input/Output Connector
J9,1 Early warning
J9,2 Ground
J9,3 Service window
J9,4 Ground
J9,5 Alert input

JP5 – Line Output Select
JP5,1 Outbound
JP5,2 Common
JP5,3 Ceiling Speaker

J29 – AC Power
J29,1 16VAC power input
J29,2 16VAC power input

J18 – Line In/Out
J18,1 Line out
J18,2 Ground
J18,3 Line in
J18,4 Ground
J18,5 Not used

J15 – Vehicle Detector Board Interface 2 (Secondary)
J15,1 Negative vehicle detect signal
J15,2 Vehicle detector power
J15,3 Ground
J15,4 Not used
J15,5 Not used

J25 – Remote Switch and Vehicle Detect 2 Interface
J25,1 Speed Team Remote Common
J25,2 Not used
J25,3 Ground
J25,4 Not used
J25,5 Record Remote
J25,6 Ground
J25,7 Not used
J25,8 Relay 2 Normally open
J25,9 Relay 2 Common
J25,10 Relay 2 Normally Closed

Transceiver Circuit Board

J2 –
J2,1 +5VDC
J2,2 Ground
J2,3 NC
J2,4 Ground
J2,5 NC
J2,6 /A1 Talk
J2,7 Tx audio 1
J2,8 /B1 Talk
J2,9 Ground
J2,10 Car 1
J2,11 Rx audio A1
J2,12 Ground
J2,13 Ground
J2,14 NC
J2,15 Rx audio B1 or B1 + B2
J2,16 Tx audio 2
J2,17 /A2 Talk
J2,18 Ground
J2,19 /B2 Talk
J2,20 Rx audio A2
J2,21 Car 2
J2,22 Ground
J2,23 Ground
J2,24 Rx audio B2, or B1 + B2

Switcher Circuit Board

J1 – DM1 Interconnect

J1,1 Microphone in
J1,2 Microphone in
J1,3 Ground
J1,4 +12VDC
J1,5 Not used

J2 – Menu Board Interconnect

J2,1 Speaker/microphone in/out
J2,2 Speaker/microphone in/out
J2,3 Shield
J2,4 Speaker out
J2,5 Speaker out

J3 – Detector/Timer Interconnect

J3,1 Loop
J3,2 Loop
J3,3 Positive vehicle detection signal
J3,4 Ground
J3,5 Negative vehicle detection signal
J3,6 Greet
J3,7 Greet
J3,8 Negative vehicle detection signal
J3,9 Ground
J3,10 Positive vehicle detection signal

J4 – Backup System Interconnect

J4,1 Loop
J4,2 Loop
J4,3 Negative vehicle detection signal
J4,4 Ground
J4,5 Positive vehicle detection signal
J4,6 Not used
J4,7 Speaker/microphone in/out
J4,8 Speaker/microphone in/out
J4,9 +12V to +48V in
J4,10 +12V to +48V in

J5 – Audio Board Interconnect

J5,1 Microphone 1
J5,2 Microphone 2
J5,3 Ground
J5,4 +12VDC
J5,5 Positive vehicle detector input
J5,6 Negative vehicle detector input
J5,7 Vehicle detector power
J5,8 Not used
J5,9 Outside speaker –
J5,10 Outside speaker +

J6 – Vehicle Detector Board Interconnect

J6,1 Vehicle detector signal
J6,2 Vehicle detector signal
J6,3 Ground
J6,4 Not used
J6,5 Not used

Vehicle Detector Circuit Board (Optional)

P1 – Audio Board Interface Cable Connector

P1,1 Signal
P1,2 Power
P1,3 Ground

TB1 – Vehicle Detector Loop Connector

APPENDIX B: FUNCTIONAL DESCRIPTION OF BLOCK DIAGRAM

The base station is the main control and interface of the Wireless 6000. All audio to and from the speaker post and COMMUNICATOR® routes through the base station. The base station contains the following circuit boards: audio board, transceiver board, optional switcher board and optional vehicle detector board.

Audio Board

The audio board contains all of the microphone and speaker amplifiers, as well as the power supplies and A and B channel decoders. The A and B decode signals are used by the audio board to route the audio signals. The ceiling speaker is connected directly to the board.

Transceiver Board

The transceiver board contains the RF transmitter and receiver, which allow communication with the Communicators.

Vehicle Detector Board (optional)

The vehicle detector board is used to generate a vehicle-presence output from an inductive loop. The output of this board is connected to the switcher board, which activates the base station for drive-thru operation.

Switcher Board (optional)

The outside speaker/microphone lines are routed to a switch matrix on this board. The microphone input and speaker output (half-duplex mode) from the audio board are also routed to this matrix. The board also contains the necessary connections and a switch for an emergency backup system. It also provides the necessary connections for an external vehicle detector.

Wireless 6000 Base Station Block Diagram

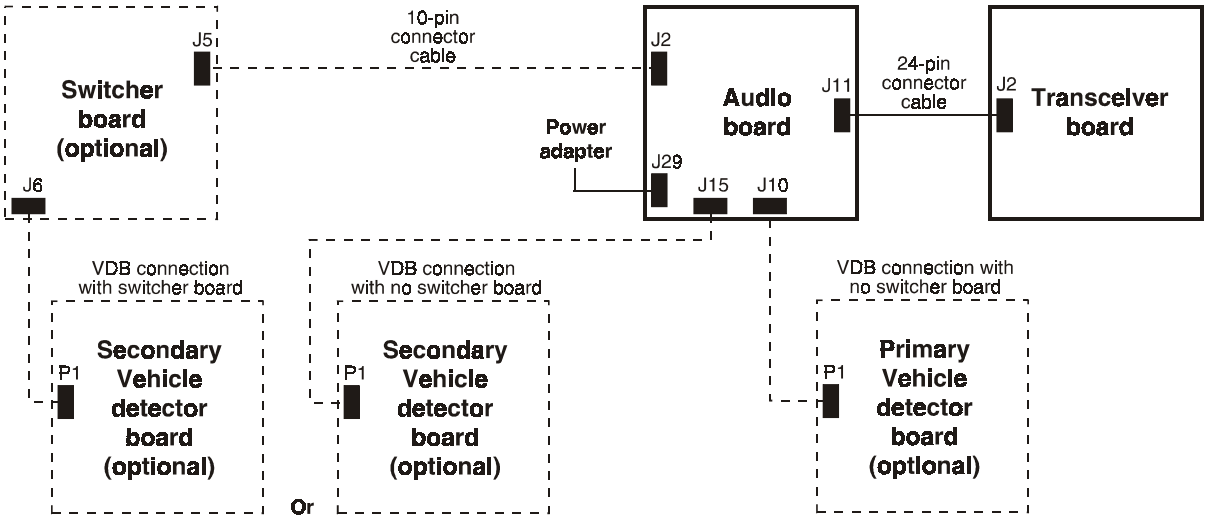

Figure B-1.

APPENDIX C: WIRELESS 6000 SPECIFICATIONS

Base Station

1.	Voltage input	16VAC ±2.5V
2.	AC current input	2.5A maximum
3.	Audio distortion	5% maximum level
4.	Outside speaker output	3 watts RMS into 8 ohms
5.	Ceiling speaker power	3 watts RMS into 8 ohms
6.	Controls/Switches (front panel only)	2-position vehicle detector switch (Normal – Override/Reset) 2-position "Speed Team" ON/OFF switch 2-position "Red Message" ON/OFF switch 2-position "Green Message" ON/OFF switch 1-position "Record" switch (0n bottom of cabinet) VAA level control Vehicle present tone volume control in Communicators Vehicle present tone volume control at ceiling speaker Outside speaker volume control Outside recorded message volume control Inbound volume control from outside mic to ceiling speaker Channel "A" volume control at ceiling speaker Channel "B" volume control at ceiling speaker Recorded message volume control at ceiling speaker
7.	TX/RX frequency	2400MHz – 2483.5MHz
8.	Dimensions	7.75"H x 12.75"W x 3.8"D (197 mm x 323 mm x 97 mm)
9.	Weight	4 lbs (1.81 kg) maximum

COM6000BP COMMUNICATOR®

1.	Battery type	3.6V Lithium ion
2.	Battery life	10 hours (typical)
3.	RF frequency	2400MHz – 2483.5MHz
4.	Weight	5.1 oz (.133 kg) with battery
5.	Controls	Power ON/OFF button Volume-up button Volume-down button "A1" button "A2" button "B" button
6.	Indicator	Dual-color LED (red/green)

AC40 Battery Charger

1.	Voltage input	16.5VAC
2.	Number of charging ports	4
3.	Number of storage ports	6
4.	Charging time	2 hrs maximum
5.	Dimensions	7.6" x 4.6" x 2.6" (193mm x 117mm x 66mm)
6.	Weight	1.5 lb (.68 kg)
7.	Indicators	4 red, 4 green, 4 yellow LEDs

APPENDIX D: SP2000A SPEAKER/MICROPHONE INSTALLATION

Installation

Drill four inch (3.2 mm) pilot holes at the spots shown on Figure D-1 A, in the flange of the SP2000A.

Hold the enclosed SP2000A mounting template against the outside of the speaker grill on the speaker post or menu board, at the desired location. With a pencil or other sharp object, mark the speaker grill through the four drill-hole targets on the template. Drill a $^{3}/_{16}$ inch (4.8 mm) hole at each of the marked spots.

Hold the SP2000A flush against the inside of the speaker grill, with the four pilot holes on its flange directly over the four holes drilled through the grill speaker. From the outside of the speaker grill, drill the four enclosed self-tapping screws through the drilled holes in the speaker grill and through the SP2000A flange at each pilot hole, as shown in Figure D-1 B.

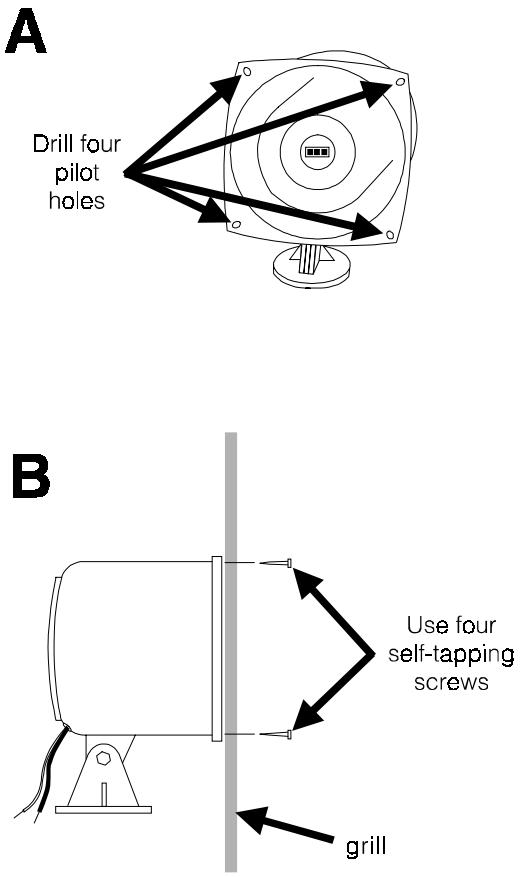

Figure D-1. Installing the SP2000A

Cable Connections

CAUTION: Never run high-voltage cables in the same conduit with audio or loop cables.

Connect the red wire from the appropriate cable to the white SP2000A wire, and the black cable wire to the black SP2000A wire as shown in Figure D-2. Do not connect the drain wire. Solder the connection and cover it with electrical tape or shrink tubing. Solder all splices to prevent deterioration of performance.

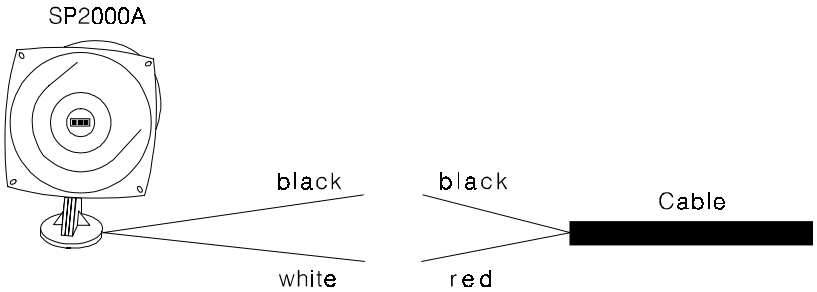

Figure D-2. SP2000A cable connections

APPENDIX E: DM1 MICROPHONE INSTALLATION

The following instructions are for installation of the DM1 Microphone in standard, full-duplex installations, both inside and outside a speaker post or menu board. Specific installation requirements may vary. Refer to wiring diagrams on pages A-15 and A-16 for cable connections.

In order to avoid audio feedback, the speaker unit must be mounted at least 2 feet (610 mm) from the microphone unit. Positioning of the two units is critical. Install the microphone unit before the speaker unit, so it can be positioned where the customer will be speaking directly into it. The speaker unit can then be installed anywhere around the microphone unit, as long as they are at least 2 feet (610 mm) apart, center-to-center. This distance may vary according to specific conditions.

NOTE: Try the system with the speaker unit at various locations before permanently mounting it. If it is not positioned correctly, feedback may occur. If this happens, reposition the speaker at other locations around the microphone unit until the feedback disappears. If possible, park a vehicle in front of the post to simulate echo conditions that may also cause feedback.

To Install the DM1 Microphone Inside a Speaker Post or Menu Board

Typical DM1 Microphone installation involves mounting it inside the upper compartment of the SPP2 speaker post. The microphone unit must be mounted against the inside of the speaker grill. The four enclosed pre-cut foam pieces are made to fit around the DM1 in many types of speaker posts and menu boards. If the unit must be mounted in a small area, compress the foam when installing it and closing the speaker post or menu board. In larger areas, additional foam (not supplied) can be added. To install the DM1 in a typical SPP2 speaker post, refer to Figures E-1 and E-2 and follow these instructions.

If the DM1 needs to be mounted on top a speaker post or on the outside of a menu board, refer to sections 2 or3.

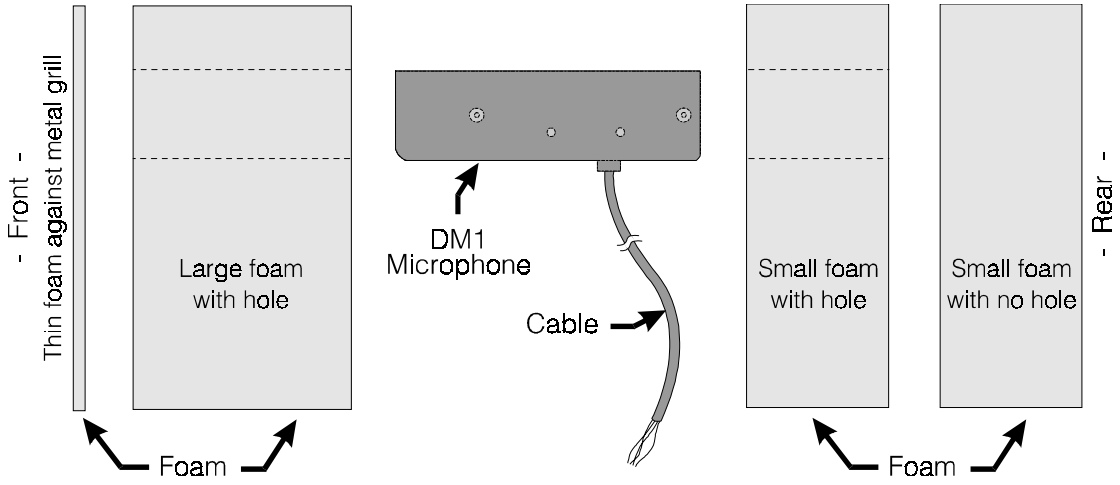

Figure E-1. Sequence of DM1 and foam inserts in speaker post or menu board

- Remove the rubber plug from the back of the DM1 microphone unit, and locate the POT inside the hole. Turn the POT approximately ¾ of the way clockwise, then replace the rubber plug.
- Place the enclosed thin piece of foam against the inside of the metal grill.
- Place the DM1 Microphone into the holes on the large and small pieces of foam with holes, in the positions shown in Figures E-1 and E-2.
- Place the DM1 in the two pieces of foam into the upper compartment of the speaker post, against the thin piece of foam already in place.
- Route the DM1 cable down through the hole in the shelf as shown in Figure E-2.
- Place the remaining piece of foam (with no hole in it) against the other foam in the upper compartment of the SPP2 speaker post.
- Splice the DM1 cable wires to the audio cable wires according to the color codes shown in the appropriate wiring diagram on pages A-15 and A-16.
  NOTE: In retrofit installations, splice the DM1 cable wires to the audio cable wires that were disconnected from the removed speaker, according to the color codes shown in the appropriate wiring diagram on pages A-15 and A-16.
- Close the speaker post, replacing all screws that were removed from the back cover.

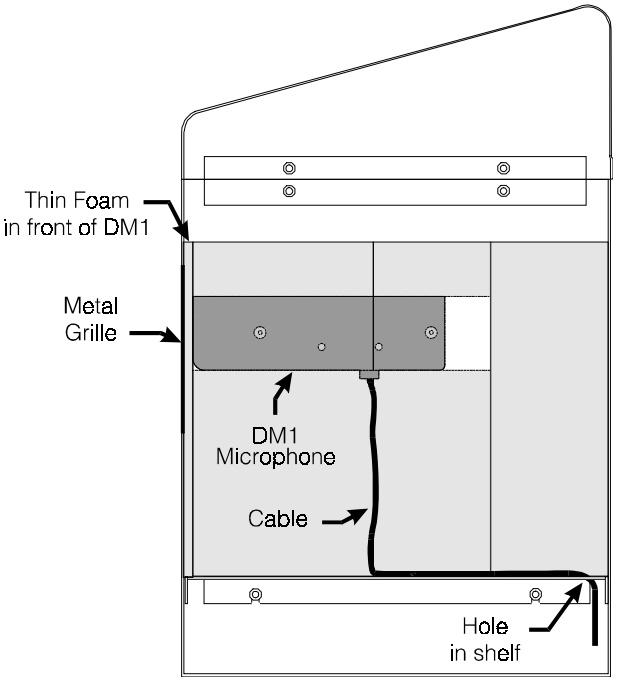

Figure E-2. DM1 and foam inserts shown in typical SPP2 speaker post installation

To install the DM1 Microphone on top of a speaker post, mount the DM1 as follows.

- Disconnect the microphone cable from the existing SP2000A Microphone Unit or SP2000D Speaker/Microphone in the speaker post.
- Determine the best location for mounting the DM1 Microphone on top of the speaker post. For best performance, it should be 42 to 46 inches (1.07 to 1.17 meters) above the drive-thru lane.
- Drill a $^{3}/_{16}$ inch (4.76 mm) hole through the selected mounting surface and center the enclosed rubber gasket over the hole, with the two screw holes in the gasket to the front and rear of the position the microphone will face as shown in Figure E-3. Mark the mounting surface through the two screw holes.
- Using a $^{1}/_{10}$ inch (2.54 mm) drill bit (approximate), drill a pilot hole through the mounting surface at each of the marked spots.
- Center the rubber gasket over the three holes and place the microphone mounting bracket over the gasket. Place one of the enclosed lock washers and self-tapping screws through the screw slot at the front of the bracket and the screw hole in the gasket below it as shown in Figure E-3. Using a high-speed drill, drill the screw through the mounting surface to secure the bracket in place. Do not over tighten the screw, or the metal bracket could be damaged. Secure the rear of the bracket in place with the remaining washer and screw in the same manner.
- Route the 6 foot (152 mm) DM1 Microphone cable all the way through the hole in the mounting bracket strain relief as shown in Figure E-4.

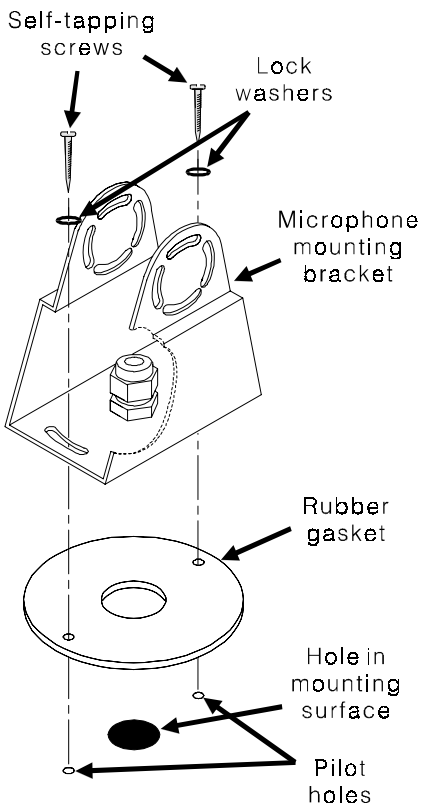

Figure E-3. Installing gasket and bracket

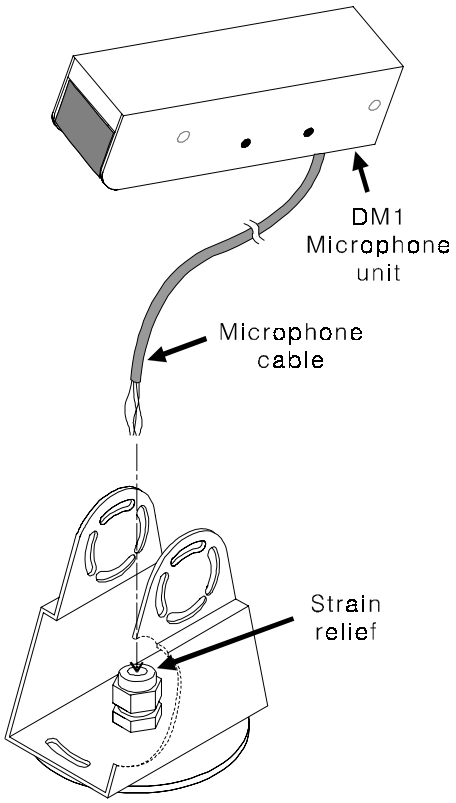

Figure E-4. Routing cable through strain relief

- Position the DM1 Microphone unit between the sides of the bracket and align the two holes in the unit with the two slots on the bracket. Fasten the unit in place with two of the four remaining lock washers and screws, inserting the screws into the holes toward the rear of the microphone as shown in Figure E-5.
- Pull any slack cable down below the mounting surface, leaving just enough to position the microphone as required, and tighten the nut on the strain relief below the microphone as seen in Figure E-5.
- Strip and splice the color-coded wires of the existing microphone cable to the corresponding color-coded wires of the DM1 Microphone cable. Solder all splices and cover them with electrical tape or heat shrink tubing.

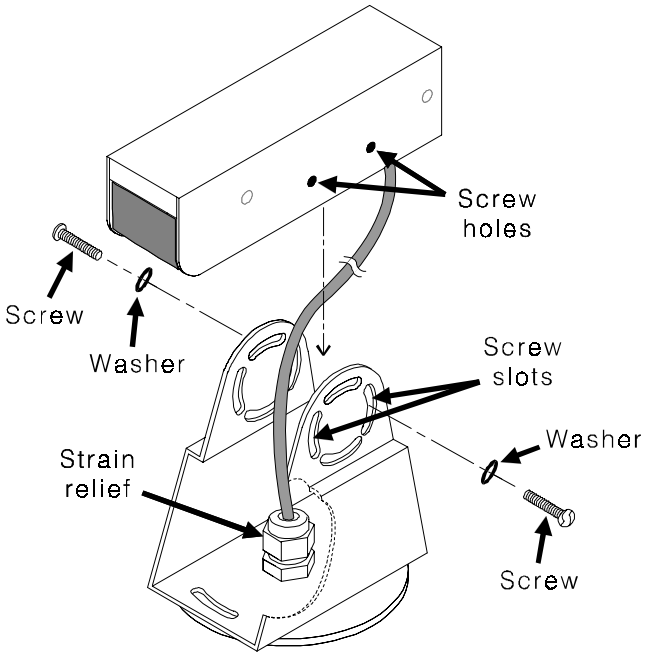

Figure E-5. Mount microphone on bracket

- Insert the front end of the microphone into the foam-lined hole in the windscreen so the screw holes on the windscreen flanges are aligned with the holes on the sides of the microphone mounting bracket as shown in Figure E-6.
- Place the two screws and washers through the holes on the windscreen and mounting bracket, into the screw holes on the sides of the microphone unit as shown in Figure E-6. Use a standard (slotted) screwdriver to tighten the screws in place.

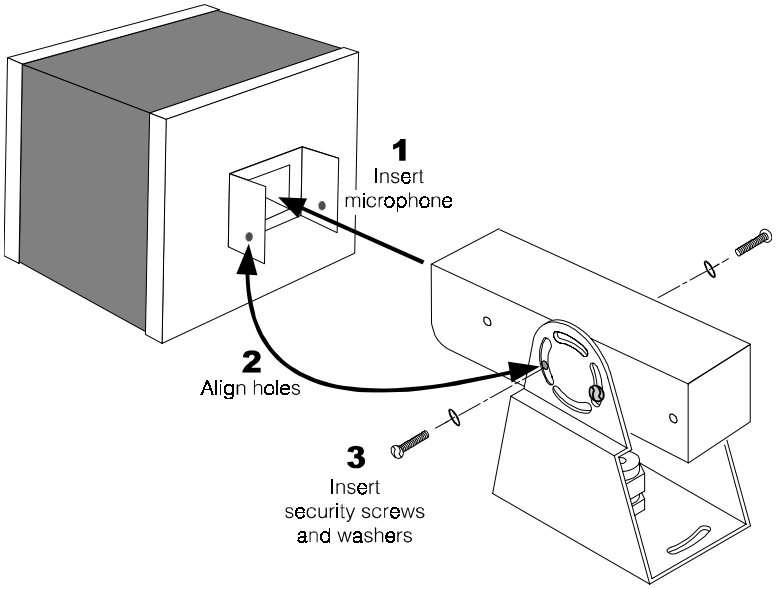

Figure E-6. Install windscreen on microphone

To install the DM1 Microphone on the outside of a menu board, use the menu-board mounting bracket to mount the DM1 as follows.

- Disconnect the microphone cable from the existing SP2000A Microphone Unit or SP2000D Speaker/Microphone in the menu board.
- Determine the best location for mounting the DM1 Microphone on the outside of the menu board. For best performance, it should be 42 to 46 inches (1.07 to 1.17 meters) above the drive-thru lane.
- Attach the menu-board mounting bracket to the DM1 as shown in Figure E-7.
- Install the strain relief on the menu board mounting bracket as shown in Figure E-8, and route the cable through the strain relief. Pull any slack cable down through the bracket, leaving just enough to allow the microphone to be rotated up and down, and tighten the nut on the strain relief below the microphone.

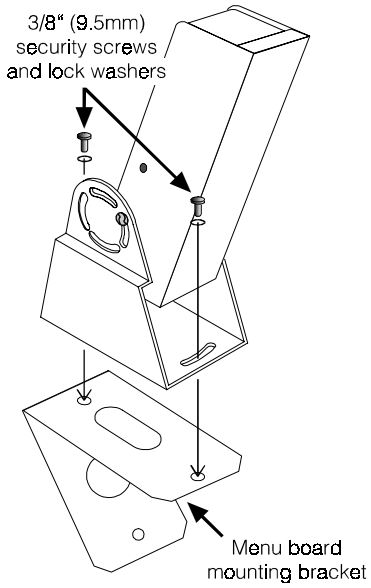

Figure E-7. Attach mounting bracket

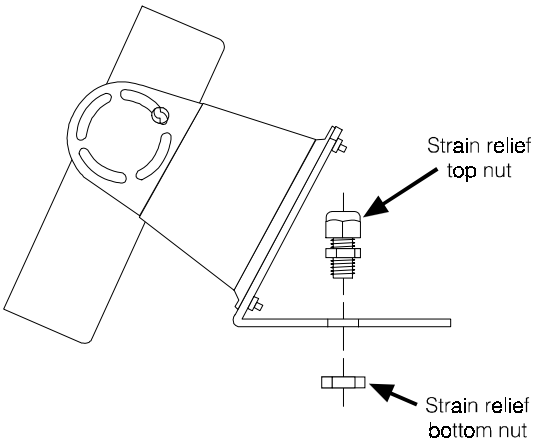

Figure E-8. Install strain relief

- Mount the microphone on the menu board as shown in Figure E-9.
- Install the windscreen on the microphone as shown in Figure E-6.
- Strip and splice the DM1 cable wires to the audio (microphone) cable wires coming through the conduit from the building, according to the color codes shown on the appropriate wiring diagram in Figures E-10 and E-11. Solder all splices and cover them with electrical tape or heat shrink tubing.

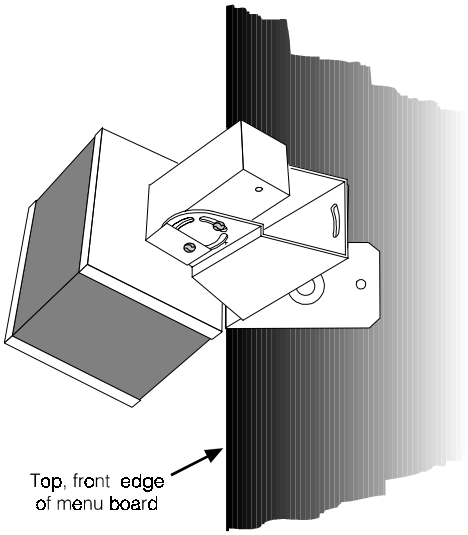

Figure E-9. DM1 Microphone mounted on top of menu board

IMPORTANT
Before completing this installation, be certain all DIP switches, jumpers and adjustments are set appropriately.

Outside Speaker — to J2, 1 & 2

IMPORTANT
MICROPHONE AND SPEAKER MUST USE SEPARATE CABLES

To DM1 Microphone
- White — to J1, 4
- Shield — to J1, 3
- Black — to J1, 2
- Red — to J1, 1

To Timer System
- Positive Vehicle Detect Signal (+11V Minimum) — to J3, 10
- Ground — to J3, 9
- Negative Vehicle Detect Signal — to J3, 8
- Greet — to J3, 7
- Greet — to J3, 6

NOTE: If using the Internal Message Repeater, do not use J3 pins 6 & 7 for Greet. See ALTERNATE GREET WIRING.

From External Detector
- Negative Vehicle Detect Signal — to J3, 5
- Ground — to J3, 4
- Positive Vehicle Detect Signal (+11V Minimum) (When not using optional VDB) — to J3, 3

To Backup System
- Negative Vehicle Detect Signal — to J4, 3
- Ground — to J4, 4
- Positive Vehicle Detect Signal (+11V Minimum) — to J4, 5
- Speaker/Microphone — to J4, 7
- Speaker/Microphone — to J4, 8

In this configuration, this switch must be **OUT**.

Switcher Board optional

Vehicle Detector Board (VDB) optional

To Underground Loop

Alternate Greet Wiring
Connect timer ground to base audio J2, 1. Connect an unused Vehicle Detect input (1-6) to base audio J2, 2. Assign the Vehicle (1-6) as GREET and configure for negative detection.

- to J2, 2 — "A" Decode (Active Low)

To Message Repeater
- to J2, 3 — Isolated Vehicle Detect Signal
- to J2, 4 — Isolated Vehicle Detect Ground

Base station interconnect cable connections for dual-lane systems not using a mode switch

Connections at J26 in Secondary Base Station
- 1* Vehicle Detect In
- 2* Vehicle Detect Out
- 3 /A2 - Talk
- 4 /B2 - Talk
- 5 Car 2
- 6* Ground
- 7 Transmitter Audio A2
- 8 Ground
- 9 Receiver Audio A2
- 10 Receiver Audio B2 (B1+B2)

NOTE: J22, 1 to J26, 1; J22, 2 to J26, 2; etc.

Interconnect cable wires 1, 2 & 6

* **NOTE:** If using a mode switch between two base stations, the vehicle detect wires and a ground wire at each end of the base station interconnect cable must be broken out of the cable and connected to J22 in the Primary Base Station and J26 in the Secondary Base Station as shown below. If no mode switch is used, the vehicle detect wires will remain connected as shown above.

Base station interconnect cable connections for dual-lane systems if using a mode switch

MS1000 Mode Switch
(optional with dual-lane systems)

Primary Base — J22
- VEH DETECT OUT
- NOT USED
- GROUND
- VEH DETECT IN
- Shld

S1: NC NC NC NC

Secondary Base — J26
- VEH DETECT OUT
- NOT USED
- GROUND
- VEH DETECT IN

to J2, 6=gn, 7=wh & 8=shld

to J29, 1 & 2

Grill Speaker (optional)

16.5 VAC Adapter

Transceiver Board

Audio Circuit Board

J9 - Input/Output
- to J9, 1 — Early Warning In (Active Low)
- to J9, 2 — Ground
- to J9, 3 — Service Window In (Active Low)
- to J9, 4 — Alert In Ground
- to J9, 5 — Alert In (+12V From System 30 Timer)

Wiring Diagram for Alert Input other than from Timer

Relay — Relay activated by some other device

N/O — J9 — Common — J30

Wiring Diagram
Wireless 6000, Full-Duplex with VDB and Switcher Board and DM1 Microphone

Figure E-10.

IMPORTANT
MICROPHONE AND SPEAKER MUST USE SEPARATE CABLES

IMPORTANT
Before completing this installation, be certain all DIP switches, jumpers and adjustments are set appropriately.

To DM1 Microphone
White — to J1, 4
Shield — to J1, 3
Black — to J1, 2
Red — to J1, 1

To Timer System
Positive Vehicle Detect Signal (+11V Minimum) — to J3, 10
Ground — to J3, 9
Negative Vehicle Detect Signal — to J3, 8
Greet — to J3, 7
Greet — to J3, 6

NOTE: If using the Internal Message Repeater, do not use J3 pins 6 & 7 for Greet. See ALTERNATE GREET WIRING.

From External Detector
Negative Vehicle Detect Signal — to J3, 5
Ground — to J3, 4
Positive Vehicle Detect Signal (+11V Minimum) (When not using optional VDB) — to J3, 3

Outside Speaker
to J3, 1 & 2

To Backup System
NOTE: IC300 SW1 DIP switch #1 & 2 must be set to ON, 3 & 4 must be set to OFF.

Speaker — to J4, 1
Speaker — to J4, 2
Negative Vehicle Detect Signal — to J4, 3
Ground — to J4, 4
Positive Vehicle Detect Signal (+11V Minimum) — to J4, 5
Microphone — to J4, 7
Microphone — to J4, 8

In this configuration, this switch must be **IN**.

S1 J6 J1 J2 J5 J3 J4 Switcher Board optional TB1 S2

TB1 Vehicle Detector Board (VDB) optional P1 S1

To Underground Loop

Alternate Greet Wiring
Connect timer ground to base audio J2, 1. Connect an unused Vehicle Detect input (1-6) to base audio J2, 2. Assign the Vehicle (1-6) as GREET and configure for negative detection.

to J2, 2 — "A" Decode (Active Low)

To Message Repeater
to J2, 3 — Isolated Vehicle Detect Signal
to J2, 4 — Isolated Vehicle Detect Ground

Base station interconnect cable connections for dual-lane systems not using a mode switch

Connections at J26 in Secondary Base Station

Vehicle Detect In — 1*
Vehicle Detect Out — 2*
/A2 - Talk — 3
/B2 - Talk — 4
Car 2 — 5
Ground — 6*
Transmitter Audio A2 — 7
Ground — 8
Receiver Audio A2 — 9
Receiver Audio B2 (B1+B2) — 10

NOTE: J22, 1 to J26, 1; J22, 2 to J26, 2; etc.

Interconnect cable wires 1, 2 & 6

* **NOTE:** If using a mode switch between two base stations, the vehicle detect wires and a ground wire at each end of the base station interconnect cable must be broken out of the cable and connected to J22 in the Primary Base Station and J26 in the Secondary Base Station as shown below. If no mode switch is used, the vehicle detect wires will remain connected as shown above.

Base station interconnect cable connections for dual-lane systems if using a mode switch

MS1000 Mode Switch
(optional with dual-lane systems)

Primary Base — J22
VEH DETECT OUT
NOT USED
GROUND
VEH DETECT IN
Shld

S1 NC NC NC NC

Secondary Base — J26
VEH DETECT OUT
NOT USED
GROUND
VEH DETECT IN

to J2, 6=gn, 7=wh & 8=shld
to J29, 1 & 2

Grill Speaker (optional)

16.5 VAC Adapter

J26 J22 J25 J5 J30 J2 J29 J28 J18 S2 R9 R320 R348 R292 R368 R42 R43 JP4 JP2 JP1 JP3 JP5 J10 J15 J9 DS7 DS6 DS5 DS4 DS10 DS9 DS2 DS3 DS8 S1 S6 K1 K2 K3 K4 Shield Ant 2 Ant 1

Transceiver Board

Audio Circuit Board

J9 - Input/Output
to J9, 1 — Early Warning In (Active Low)
to J9, 2 — Ground
to J9, 3 — Service Window In (Active Low)
to J9, 4 — Alert In Ground
to J9, 5 — Alert In (+12V From System 30 Timer)

Wiring Diagram for Alert Input other than from Timer

Relay
Relay activated by some other device
N/O — J9
Common — J30

Wiring Diagram
Wireless 6000, Full-Duplex with VDB, Switcher Board, DM1 Microphone and IC300

Figure E-11.

IMPORTANT
MICROPHONE AND SPEAKER MUST USE SEPARATE CABLES

IMPORTANT
Before completing this installation, be certain all DIP switches, jumpers and adjustments are set appropriately.

To DM3 Microphone

In this configuration, this switch must be **IN**.

To Timer System

Positive Vehicle Detect Signal (+11V Minimum)	to J3, 10
Ground	to J3, 9
Negative Vehicle Detect Signal	to J3, 8
Greet	to J3, 7
Greet	to J3, 6

NOTE: If using the Internal Message Repeater, do not use J3 pins 6 & 7 for Greet. See ALTERNATE GREET WIRING.

From External Detector

Negative Vehicle Detect Signal	to J3, 5
Ground	to J3, 4
Positive Vehicle Detect Signal (+11V Minimum) (When not using optional VDB)	to J3, 3

Outside Speaker — to J3, 1 & 2

To Backup System

NOTE: IC300 SW1 DIP switch #1 & 2 must be set to ON, 3 & 4 must be set to OFF.

Speaker	to J4, 1
Speaker	to J4, 2
Negative Vehicle Detect Signal	to J4, 3
Ground	to J4, 4
Positive Vehicle Detect Signal (+11V Minimum)	to J4, 5
Microphone	to J4, 7
Microphone	to J4, 8

To Underground Loop

Alternate Greet Wiring
Connect timer ground to base audio J2, 1. Connect an unused Vehicle Detect input (1-6) to base audio J2, 2. Assign the Vehicle (1-6) as GREET and configure for negative detection.

to J2, 2 "A" Decode (Active Low)

To Message Repeater

to J2, 3	Isolated Vehicle Detect Signal
to J2, 4	Isolated Vehicle Detect Ground

Grill Speaker (optional)

to J2, 6=gn, 7=wh & 8=shld

to J29, 1 & 2

16.5 VAC Adapter

Base station interconnect cable connections for dual-lane systems not using a mode switch

Connections at J26 in Secondary Base Station

Vehicle Detect In	1*
Vehicle Detect Out	2*
/A2 - Talk	3
/B2 - Talk	4
Car 2	5
Ground	6*
Transmitter Audio A2	7
Ground	8
Receiver Audio A2	9
Receiver Audio B2 (B1+B2)	10

NOTE: J22, 1 to J26, 1; J22, 2 to J26, 2; etc.

Interconnect cable wires 1, 2 & 6

* **NOTE:** If using a mode switch between two base stations, the vehicle detect wires and a ground wire at each end of the base station interconnect cable must be broken out of the cable and connected to J22 in the Primary Base Station and J26 in the Secondary Base Station as shown below. If no mode switch is used, the vehicle detect wires will remain connected as shown above.

Base station interconnect cable connections for dual-lane systems if using a mode switch

MS1000 Mode Switch
(optional with dual-lane systems)

Primary Base — J22: VEH DETECT OUT, NOT USED, GROUND, VEH DETECT IN, Shld

Secondary Base — J26: VEH DETECT OUT, NOT USED, GROUND, VEH DETECT IN

S1: NC NC NC NC

J9 - Input/Output

to J9, 1	Early Warning In (Active Low)
to J9, 2	Ground
to J9, 3	Service Window In (Active Low)
to J9, 4	Alert In Ground
to J9, 5	Alert In (+12V From System 30 Timer)

Wiring Diagram for Alert Input other than from Timer

Relay — Relay activated by some other device

N/O — J9 — Common — J30

Wiring Diagram
Wireless 6000, Full-Duplex with VDB, Switcher Board, DM3 Microphone and IC300

Figure E-12.

FCC NOTICE

This device complies with Part 15 of the FCC rules. Operation is subject to the following two conditions: (1) This device may not cause harmful interference, and (2) This device must accept any interference received, including interference that may cause undesired operation.

NOTE: This equipment has been tested and found to comply with the limits for a Class A digital device, pursuant to Part 15 of the FCC rules. These limits are designed to provide reasonable protection against harmful interference when the equipment is operated in a commercial environment. This equipment generates, uses and can radiate radio frequency energy and, if not installed and used in accordance with the instruction manual, may cause harmful interference to radio communication. Operation of this equipment in a residential area is likely to cause harmful interference, in which case the user will be required to correct the interference at his own expense.

Changes or modifications not expressly approved by HM Electronics, Inc. could void the users authority to operate this equipment.

The antenna(s) used for the base transmitter must be installed to provide a separation distance of at least 7.87 inches (20 cm) from all persons, and must not be co-located or operating in conjunction with any other antenna or transmitter.

This device has been designed to operate with an antenna having a maximum gain of 2dBi. Antenna having a higher gain is strictly prohibited per regulations of Industry Canada. The required antenna impedance is 50 ohms.

The term "IC:" before the certification/registration number only signifies that the Industry Canada technical specifications were met.

This product operates in the 2400 to 2483.5 MHz frequency range. The use of this frequency range is not yet harmonized between all countries. Some countries may restrict the use of a portion of this band or impose other restriction relating to power level or use. You should contact your Spectrum authority to determine possible restrictions.