Figure 5

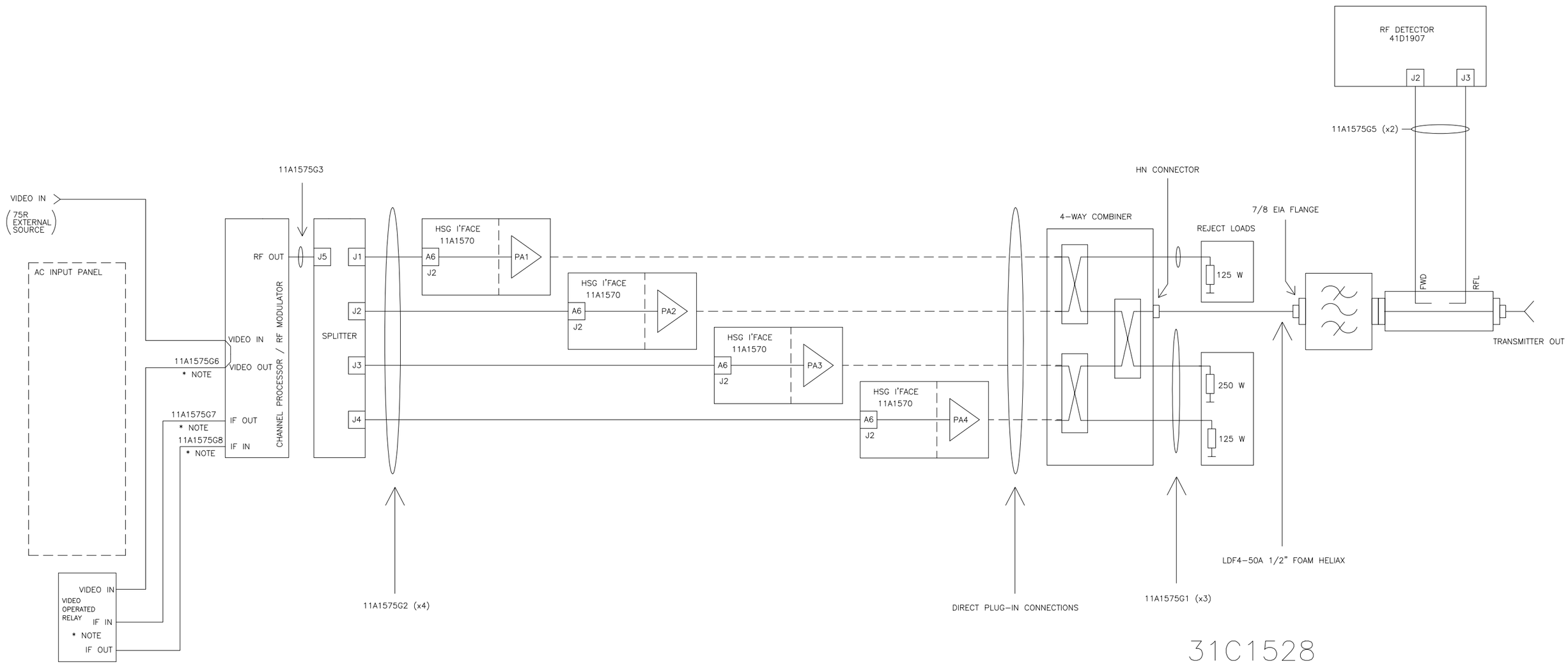

31C1528

CABINET WIRING – RF

NOTE: VIDEO OPERATED RELAY IS NOT REQUIRED WHERE LARCAN EXCITER IS USED.

Figure 6

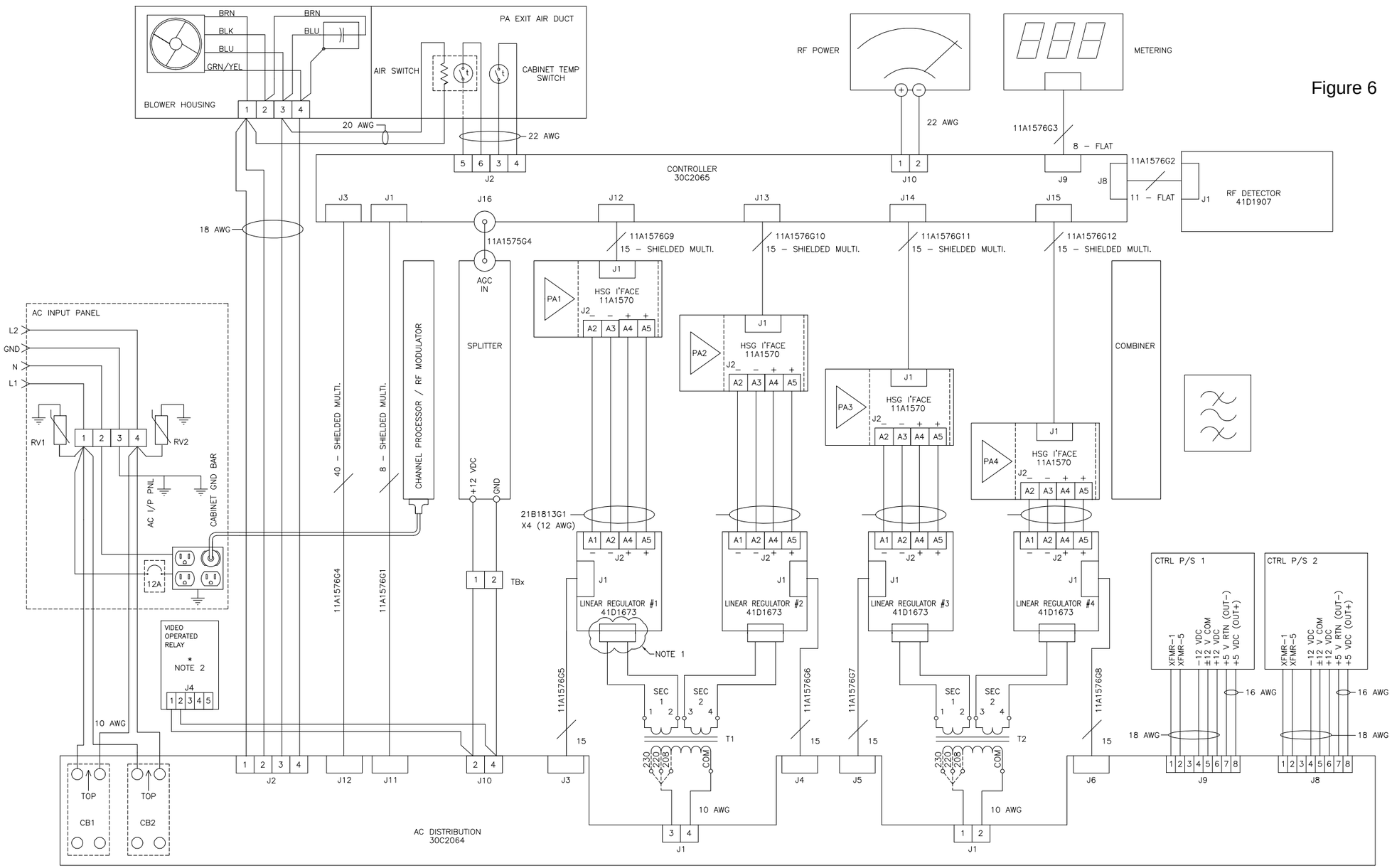

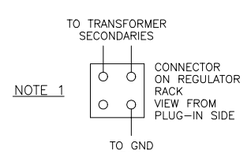

NOTE 1

NOTE 2 VIDEO OPERATED RELAY IS NOT REQUIRED WHERE LARCAN EXCITER IS USED.

31C1528

CABINET WIRING – CTRL AND PWR

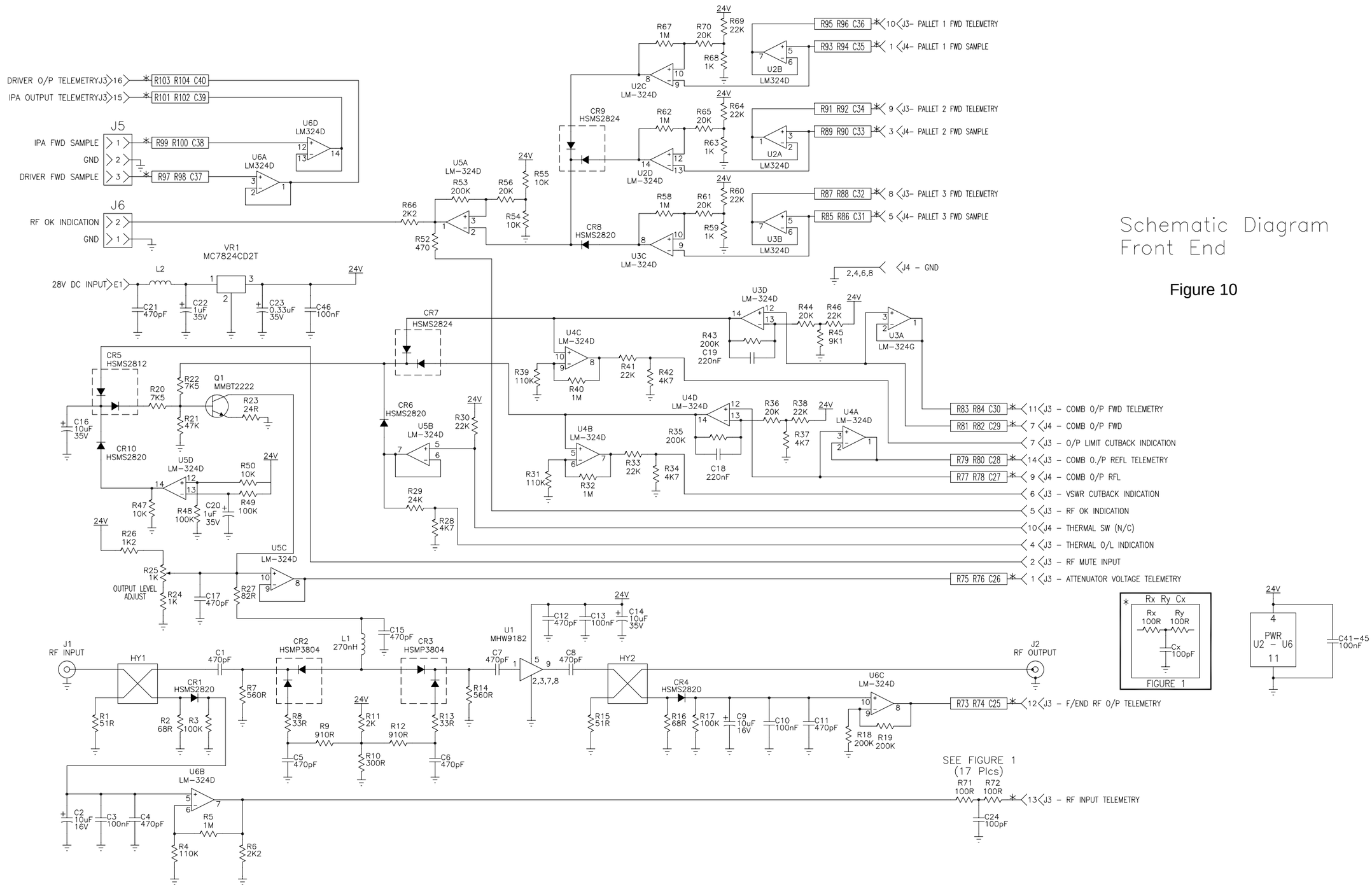

Schematic Diagram
Front End

Figure 10

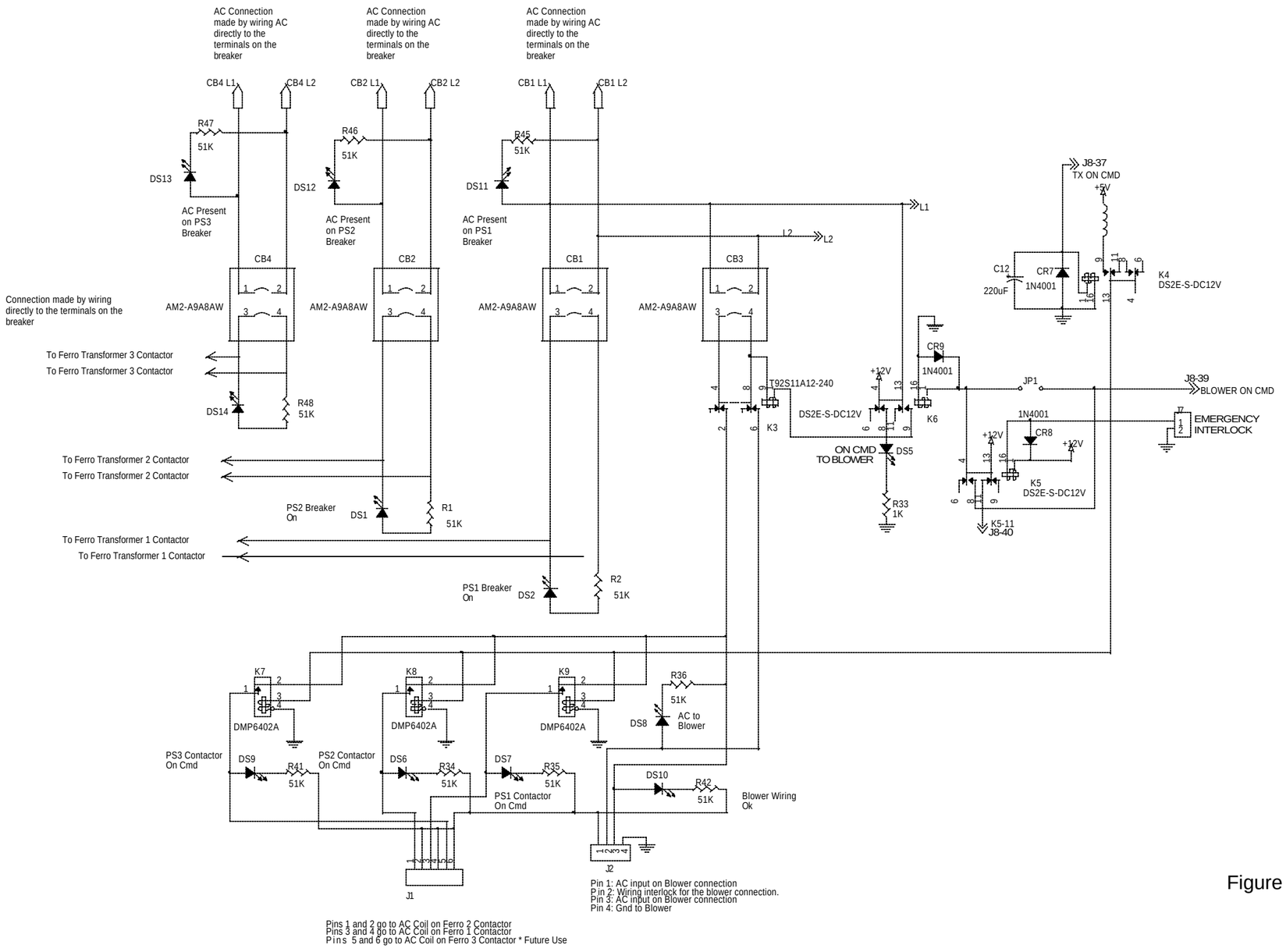
AC Connection made by wiring AC directly to the terminals on the breaker
AC Connection made by wiring AC directly to the terminals on the breaker
AC Connection made by wiring AC directly to the terminals on the breaker
CB4 L1
CB4 L2
CB2 L1
CB2 L2
CB1 L1
CB1 L2
R47 51K
R46 51K
R45 51K
DS13
DS12
DS11
AC Present on PS3 Breaker
AC Present on PS2 Breaker
AC Present on PS1 Breaker
L1
L2
CB4
CB2
CB1
CB3
AM2-A9A8AW
Connection made by wiring directly to the terminals on the breaker
To Ferro Transformer 3 Contactor
To Ferro Transformer 3 Contactor
DS14
R48 51K
To Ferro Transformer 2 Contactor
To Ferro Transformer 2 Contactor
PS2 Breaker On
DS1
R1 51K
To Ferro Transformer 1 Contactor
To Ferro Transformer 1 Contactor
PS1 Breaker On
DS2
R2 51K
T92S11A12-240
K3
DS2E-S-DC12V
K6
+12V
CR9 1N4001
ON CMD TO BLOWER
DS5
R33 1K
JP1
J8-37 TX ON CMD
+5V
C12 220uF
CR7 1N4001
K4 DS2E-S-DC12V
J8-39 BLOWER ON CMD
1N4001
CR8
EMERGENCY INTERLOCK
K5 DS2E-S-DC12V
K5-11 J8-40
K7
K8
K9
DMP6402A
R36 51K
DS8
AC to Blower
PS3 Contactor On Cmd
DS9
R41 51K
PS2 Contactor On Cmd
DS6
R34 51K
DS7
R35 51K
PS1 Contactor On Cmd
DS10
R42 51K
Blower Wiring Ok
J1
J2
Pin 1: AC input on Blower connection
Pin 2: Wiring interlock for the blower connection.
Pin 3: AC input on Blower connection
Pin 4: Gnd to Blower
Pins 1 and 2 go to AC Coil on Ferro 2 Contactor
Pins 3 and 4 go to AC Coil on Ferro 1 Contactor
Pins 5 and 6 go to AC Coil on Ferro 3 Contactor * Future Use

Figure 4

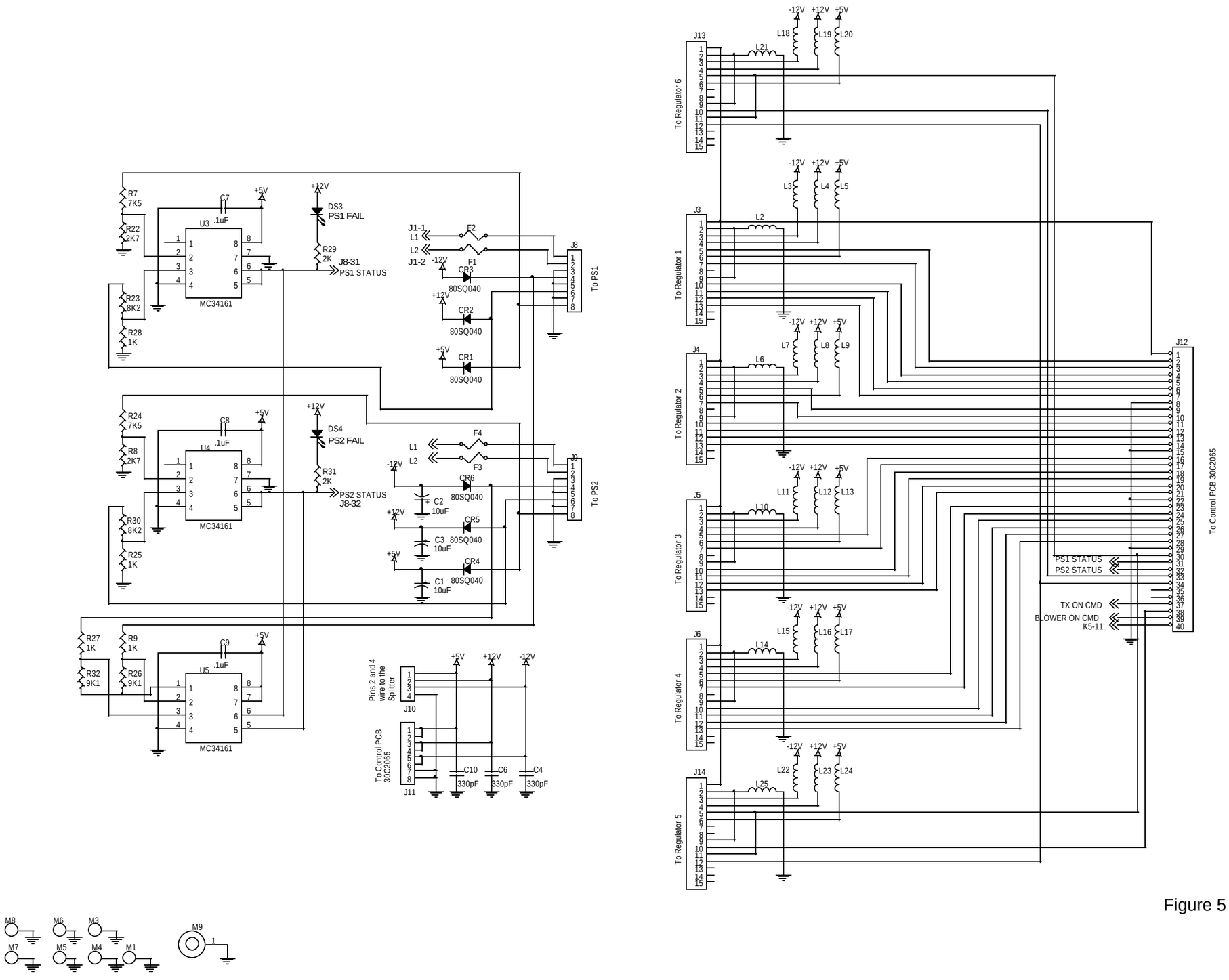
R7 7K5
R22 2K7
R23 8K2
R28 1K
C7 .1uF
U3
MC34161
+5V
+12V
DS3 PS1 FAIL
R29 2K
J8-31
PS1 STATUS
J1-1
J1-2
L1
L2
-12V
F1
F2
CR3 80SQ040
CR2 80SQ040
CR1 80SQ040
J8
To PS1
R24 7K5
R8 2K7
R30 8K2
R25 1K
C8 .1uF
U4
MC34161
DS4 PS2 FAIL
R31 2K
PS2 STATUS
J8-32
F3
F4
CR6 80SQ040
CR5 80SQ040
CR4 80SQ040
C2 10uF
C3 10uF
C1 10uF
J9
To PS2
R27 1K
R32 9K1
R9 1K
R26 9K1
C9 .1uF
U5
MC34161
Pins 2 and 4 wire to the Splitter
J10
To Control PCB 30C2065
J11
C10 330pF
C6 330pF
C4 330pF
J13
To Regulator 6
L18
L19
L20
L21
J3
To Regulator 1
L2
L3
L4
L5
J4
To Regulator 2
L6
L7
L8
L9
J5
To Regulator 3
L10
L11
L12
L13
J6
To Regulator 4
L14
L15
L16
L17
J14
To Regulator 5
L25
L22
L23
L24
J12
To Control PCB 30C2065
PS1 STATUS
PS2 STATUS
TX ON CMD
BLOWER ON CMD
K5-11
M8
M7
M6
M5
M3
M4
M1
M9

Figure 5

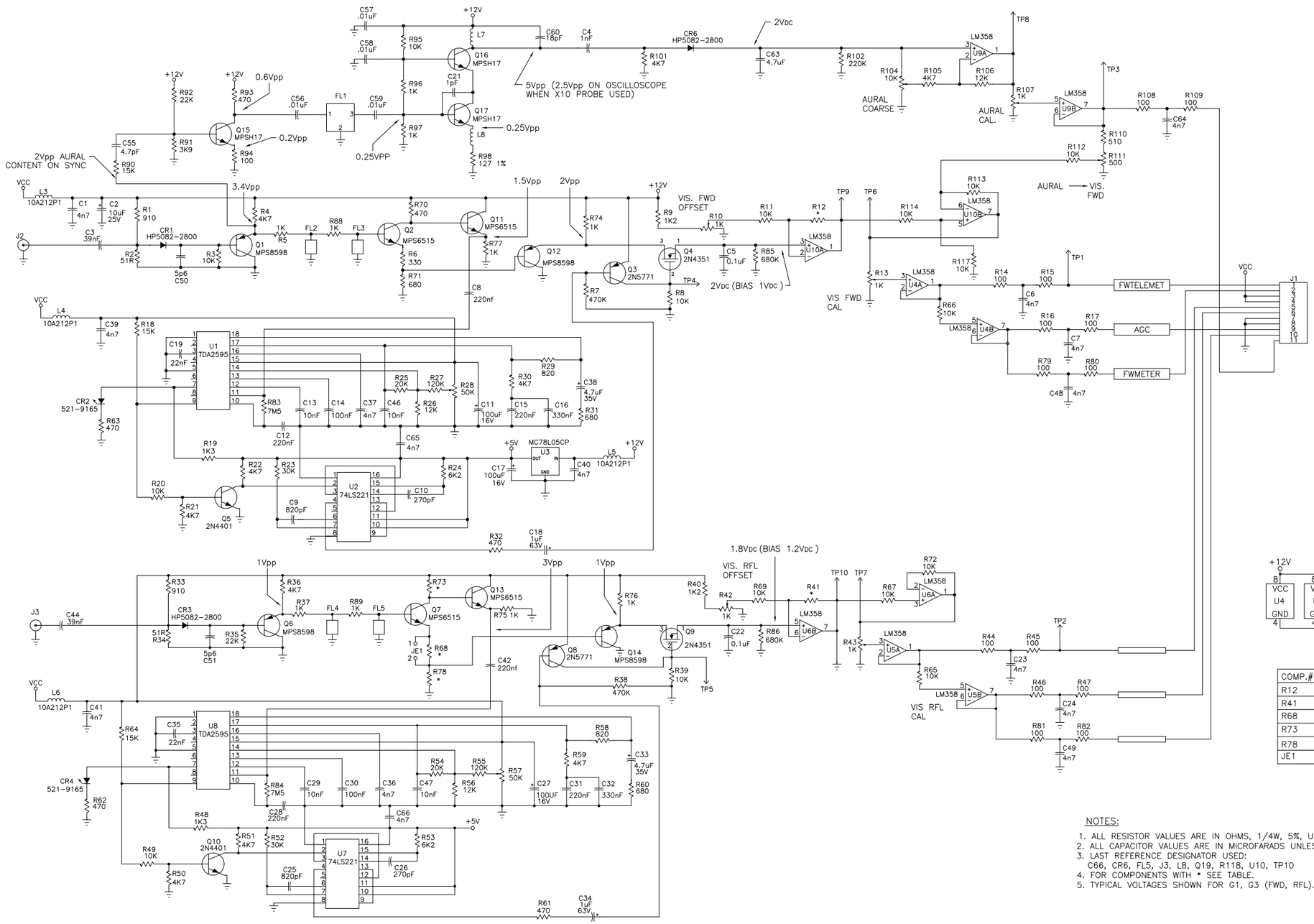

COMP.#	G1/G3	G2/G4
R12	27K	39K
R41	82K	39K
R68	–	330R
R73	3K3	470R
R78	1K	680R
JE1	YES	NO

NOTES:

1. ALL RESISTOR VALUES ARE IN OHMS, 1/4W, 5%, UNLESS OTHERWISE SPECIFIED
2. ALL CAPACITOR VALUES ARE IN MICROFARADS UNLESS OTHERWISE SPECIFIED.
3. LAST REFERENCE DESIGNATOR USED:
   C66, CR6, FL5, J3, L8, Q19, R118, U10, TP10
4. FOR COMPONENTS WITH * SEE TABLE.
5. TYPICAL VOLTAGES SHOWN FOR G1, G3 (FWD, RFL).

41D1607S **Figure 4**

SCHEMATIC VIS AUR METERING PCB

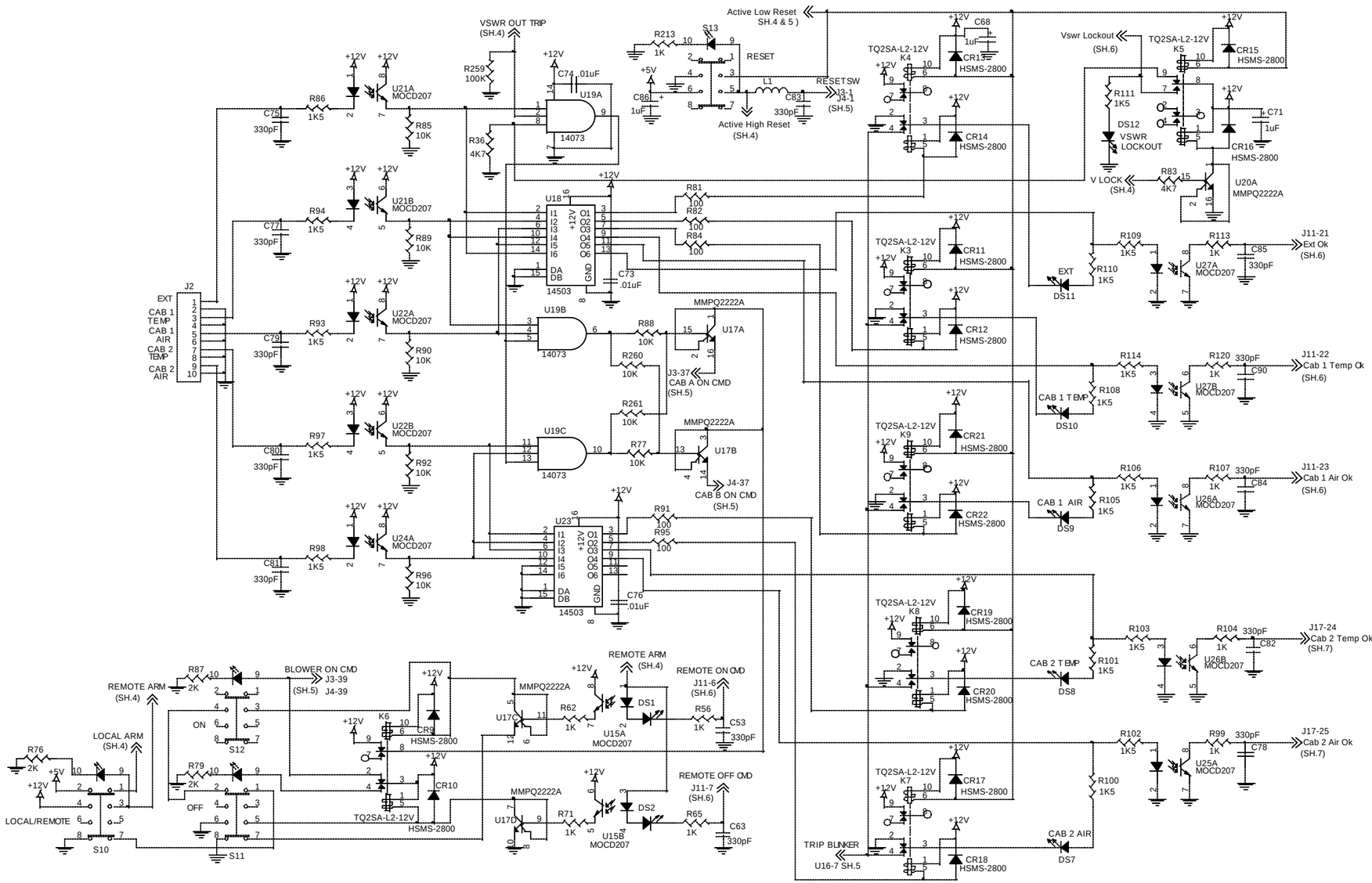
VSWR OUT TRIP (SH.4)
Active Low Reset SH.4 & 5)
Active High Reset (SH.4)
RESET
RESETSW
J3-1
J4-1 (SH.5)
Vswr Lockout (SH.6)
V LOCK (SH.4)
VSWR LOCKOUT
EXT
CAB 1 TEMP
CAB 1 AIR
CAB 2 TEMP
CAB 2 AIR
J11-21 Ext Ok (SH.6)
J11-22 Cab 1 Temp Ok (SH.6)
J11-23 Cab 1 Air Ok (SH.6)
J17-24 Cab 2 Temp Ok (SH.7)
J17-25 Cab 2 Air Ok (SH.7)
J3-37 CAB A ON CMD (SH.5)
J4-37 CAB B ON CMD (SH.5)
REMOTE ARM (SH.4)
LOCAL ARM (SH.4)
BLOWER ON CMD J3-39 (SH.5)
REMOTE ON CMD J11-6 (SH.6)
REMOTE OFF CMD J11-7 (SH.6)
LOCAL/REMOTE
TRIP BLINKER U16-7 SH.5
NOTE:
LAST REF.DESIGN.
CR34 R287
C144 S25
DS16 U53
J17 VR2
K12
L7
Q18

Figure 4

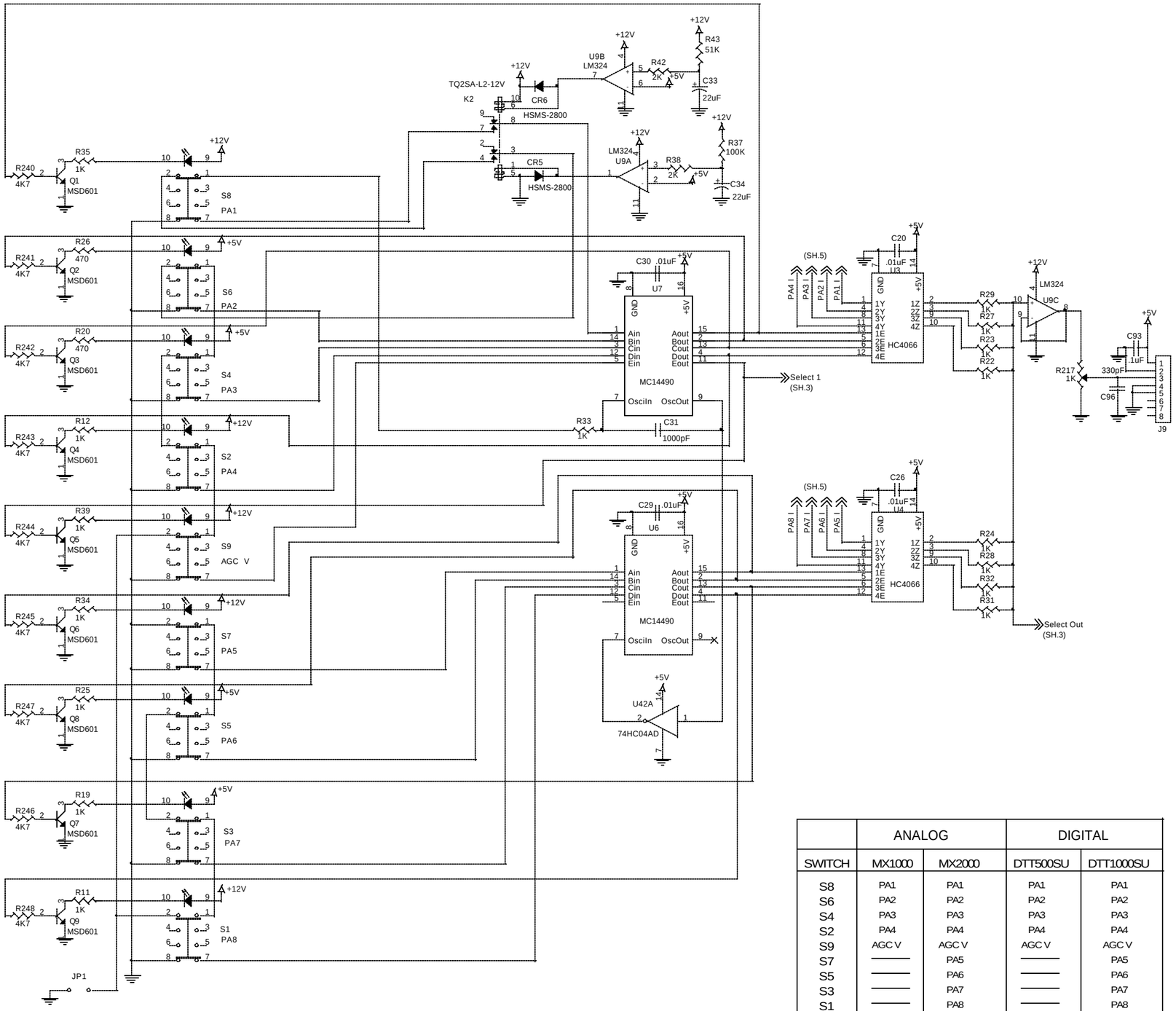

	ANALOG		DIGITAL	
SWITCH	MX1000	MX2000	DTT500SU	DTT1000SU
S8	PA1	PA1	PA1	PA1
S6	PA2	PA2	PA2	PA2
S4	PA3	PA3	PA3	PA3
S2	PA4	PA4	PA4	PA4
S9	AGC V	AGC V	AGC V	AGC V
S7	———	PA5	———	PA5
S5	———	PA6	———	PA6
S3	———	PA7	———	PA7
S1	———	PA8	———	PA8

Figure 5

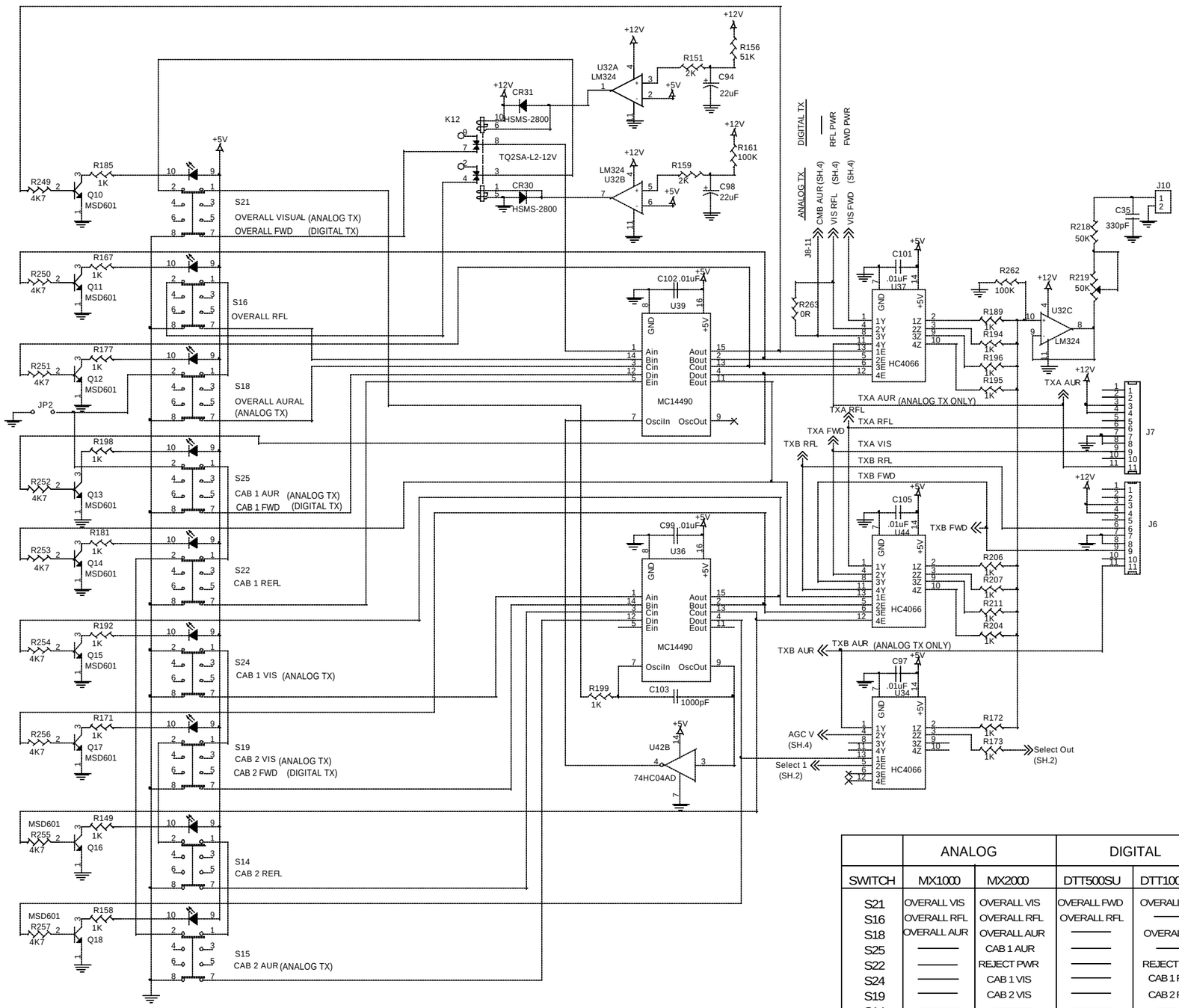

	ANALOG		DIGITAL	
SWITCH	MX1000	MX2000	DTT500SU	DTT1000SU
S21	OVERALL VIS	OVERALL VIS	OVERALL FWD	OVERALL FWD
S16	OVERALL RFL	OVERALL RFL	OVERALL RFL	———
S18	OVERALL AUR	OVERALL AUR	———	OVERALL RFL
S25	———	CAB 1 AUR	———	———
S22	———	REJECT PWR	———	REJECT PWR
S24	———	CAB 1 VIS	———	CAB 1 FWD
S19	———	CAB 2 VIS	———	CAB 2 FWD
S14	———	———	———	———
S15	———	CAB 2 AUR	———	———

Figure 6

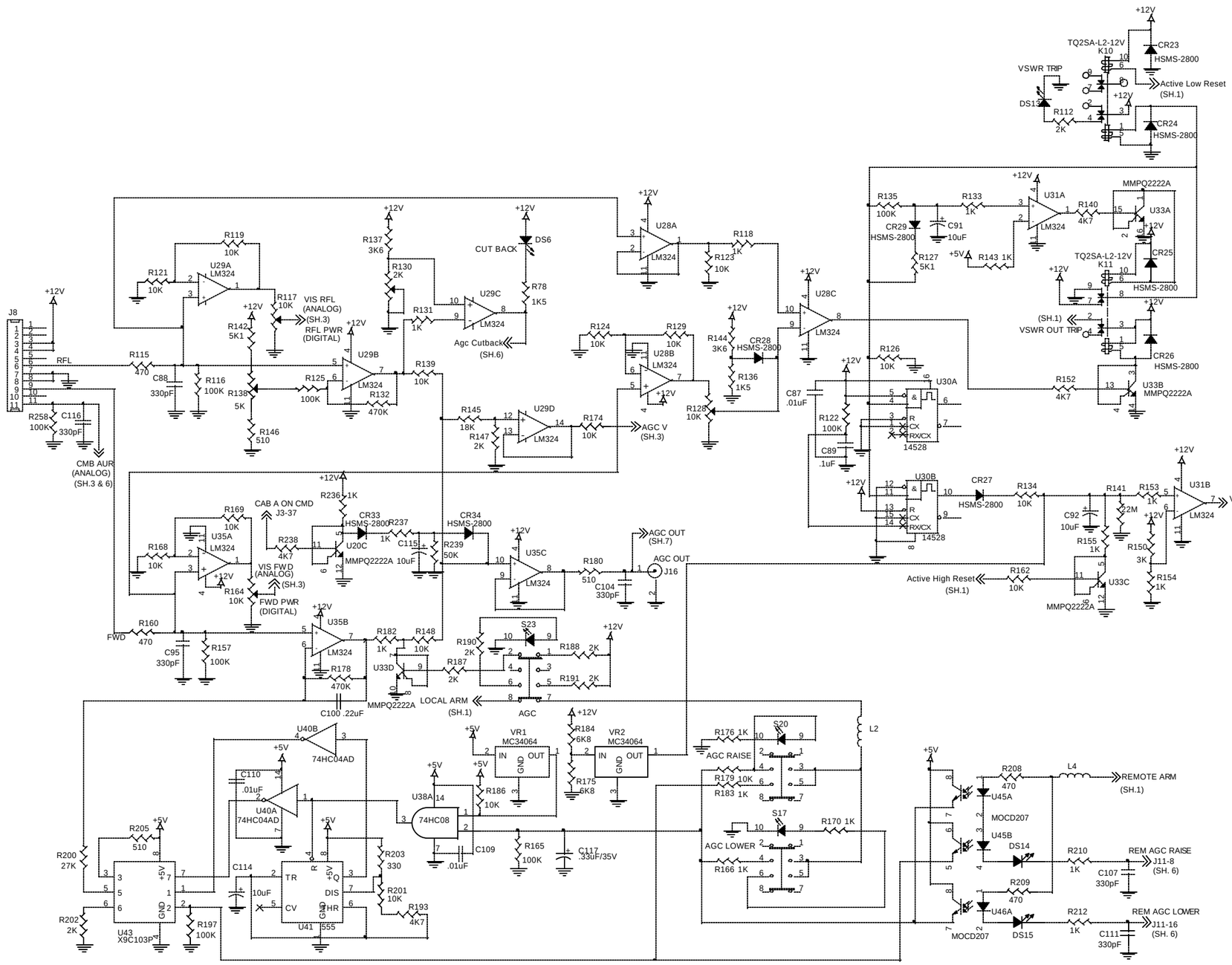
J8
RFL
R115 470
C88 330pF
R258 100K
C116 330pF
CMB AUR (ANALOG) (SH.3 & 6)
R119 10K
R121 10K
U29A LM324
R117 10K
VIS RFL (ANALOG) (SH.3)
RFL PWR (DIGITAL)
R142 5K1
R116 100K
R138 5K
R146 510
R125 100K
U29B LM324
R132 470K
R137 3K6
R130 2K
R131 1K
U29C LM324
Agc Cutback (SH.6)
CUT BACK
DS6
R78 1K5
R139 10K
R145 18K
R147 2K
U29D LM324
R174 10K
AGC V (SH.3)
U28A LM324
R118 1K
R123 10K
R124 10K
R129 10K
U28B LM324
R128 10K
R144 3K6
CR28 HSMS-2800
R136 1K5
U28C LM324
C87 .01uF
R122 100K
C89 .1uF
U30A 14528
R126 10K
R135 100K
CR29 HSMS-2800
C91 10uF
R127 5K1
R133 1K
U31A LM324
R140 4K7
MMPQ2222A U33A
R143 1K
TQ2SA-L2-12V K11
CR25 HSMS-2800
(SH.1) VSWR OUT TRIP
CR26 HSMS-2800
R152 4K7
U33B MMPQ2222A
TQ2SA-L2-12V K10
CR23 HSMS-2800
Active Low Reset (SH.1)
VSWR TRIP
DS13
R112 2K
CR24 HSMS-2800
U30B 14528
CR27 HSMS-2800
R134 10K
R141 22M
R153 1K
U31B LM324
V LOCK (SH.1)
C92 10uF
R155 1K
R150 3K
R154 1K
Active High Reset (SH.1)
R162 10K
U33C MMPQ2222A
R169 10K
U35A LM324
R168 10K
CAB A ON CMD J3-37
R238 4K7
VIS FWD (ANALOG) (SH.3)
R164 10K
FWD PWR (DIGITAL)
R236 1K
CR33 HSMS-2800
R237 1K
U20C MMPQ2222A
C115 10uF
CR34 HSMS-2800
R239 50K
U35C LM324
R180 510
C104 330pF
AGC OUT (SH.7)
AGC OUT
J16
FWD
R160 470
C95 330pF
R157 100K
U35B LM324
R178 470K
C100 .22uF
R182 1K
R148 10K
U33D MMPQ2222A
R187 2K
R190 2K
S23
R188 2K
R191 2K
LOCAL ARM (SH.1)
AGC
U40B 74HC04AD
C110 .01uF
U40A 74HC04AD
R205 510
R200 27K
R202 2K
U43 X9C103P
R197 100K
C114 10uF
U41 555
R203 330
R201 10K
R193 4K7
U38A 74HC08
R186 10K
C109 .01uF
VR1 MC34064
VR2 MC34064
R184 6K8
R175 6K8
R165 100K
C117 .330F/35V
R176 1K
S20
AGC RAISE
R179 10K
R183 1K
S17
R170 1K
AGC LOWER
R166 1K
L2
R208 470
L4
REMOTE ARM (SH.1)
U45A MOCD207
U45B
DS14
R210 1K
REM AGC RAISE
J11-8 (SH. 6)
C107 330pF
R209 470
U46A MOCD207
DS15
R212 1K
REM AGC LOWER
J11-16 (SH. 6)
C111 330pF

Figure 7

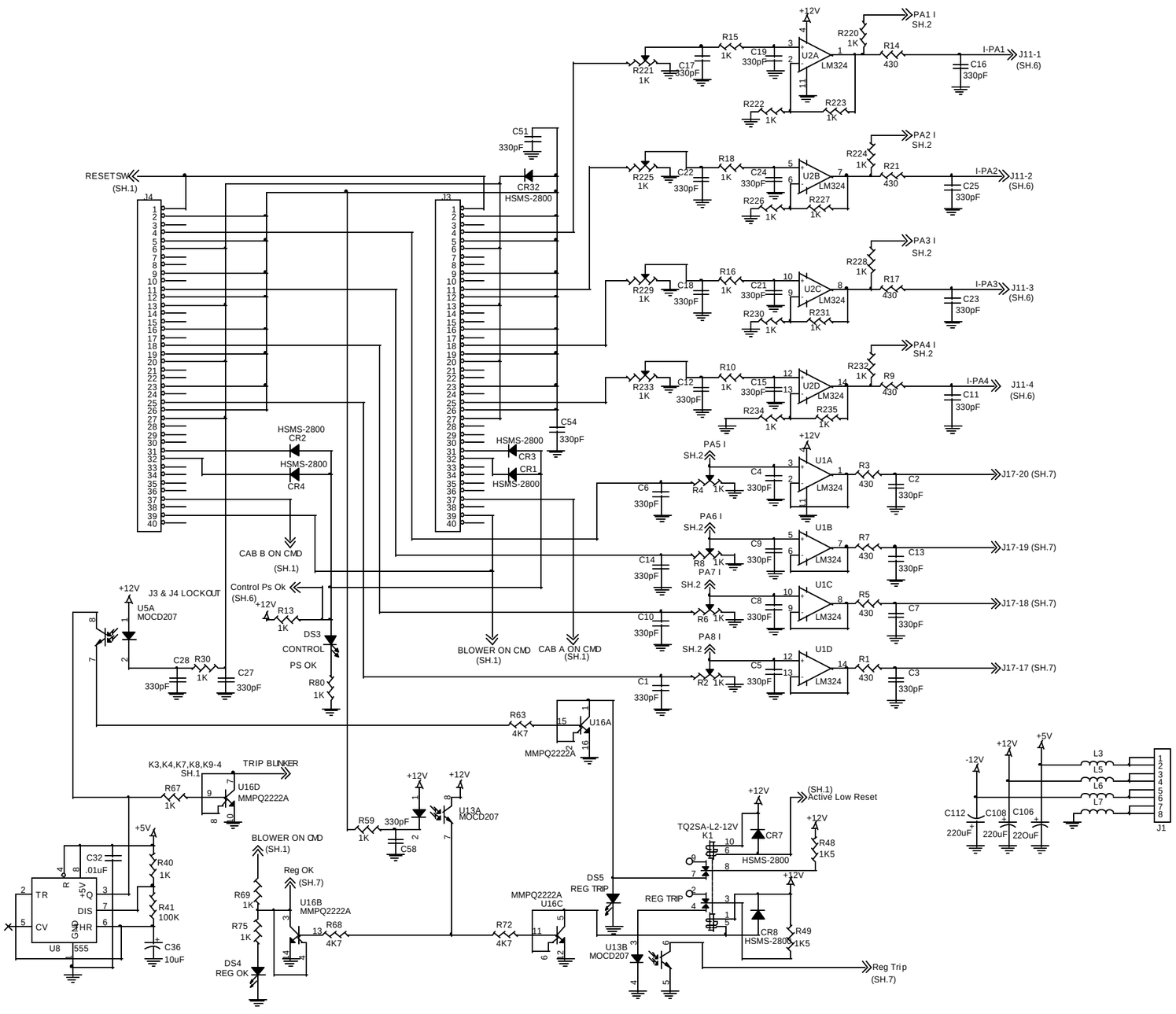
RESETSW
(SH.1)
J4
J3
C51
330pF
CR32
HSMS-2800
C54
330pF
HSMS-2800
CR2
HSMS-2800
CR4
HSMS-2800
CR3
CR1
HSMS-2800
CAB B ON CMD
(SH.1)
BLOWER ON CMD
(SH.1)
CAB A ON CMD
(SH.1)
+12V
J3 & J4 LOCKOUT
U5A
MOCD207
Control Ps Ok
(SH.6)
R13
1K
DS3
CONTROL
PS OK
R80
1K
C28
330pF
R30
1K
C27
330pF
R63
4K7
U16A
MMPQ2222A
K3,K4,K7,K8,K9-4
SH.1
TRIP BLINKER
R67
1K
U16D
MMPQ2222A
+5V
C32
.01uF
R40
1K
R41
100K
C36
10uF
TR
CV
DIS
HR
GND
U8
555
BLOWER ON CMD
(SH.1)
Reg OK
(SH.7)
R69
1K
R75
1K
U16B
MMPQ2222A
R68
4K7
DS4
REG OK
R59
1K
330pF
C58
U13A
MOCD207
R72
4K7
MMPQ2222A
U16C
DS5
REG TRIP
U13B
MOCD207
TQ2SA-L2-12V
K1
CR7
HSMS-2800
(SH.1)
Active Low Reset
R48
1K5
REG TRIP
CR8
HSMS-2800
R49
1K5
Reg Trip
(SH.7)
-12V
+12V
+5V
C112
220uF
C108
220uF
C106
220uF
L3
L5
L6
L7
J1
R221
1K
C17
330pF
R15
1K
C19
330pF
U2A
LM324
R220
1K
PA1 I
SH.2
R14
430
I-PA1
J11-1
(SH.6)
C16
330pF
R222
1K
R223
1K
R225
1K
C22
330pF
R18
1K
C24
330pF
U2B
LM324
R224
1K
PA2 I
SH.2
R21
430
I-PA2
J11-2
(SH.6)
C25
330pF
R226
1K
R227
1K
R229
1K
C18
330pF
R16
1K
C21
330pF
U2C
LM324
R228
1K
PA3 I
SH.2
R17
430
I-PA3
J11-3
(SH.6)
C23
330pF
R230
1K
R231
1K
R233
1K
C12
330pF
R10
1K
C15
330pF
U2D
LM324
R232
1K
PA4 I
SH.2
R9
430
I-PA4
J11-4
(SH.6)
C11
330pF
R234
1K
R235
1K
PA5 I
SH.2
C6
330pF
R4
1K
C4
330pF
U1A
LM324
R3
430
C2
330pF
J17-20 (SH.7)
PA6 I
SH.2
C14
330pF
R8
1K
C9
330pF
U1B
LM324
R7
430
C13
330pF
J17-19 (SH.7)
PA7 I
SH.2
C10
330pF
R6
1K
C8
330pF
U1C
LM324
R5
430
C7
330pF
J17-18 (SH.7)
PA8 I
SH.2
C1
330pF
R2
1K
C5
330pF
U1D
LM324
R1
430
C3
330pF
J17-17 (SH.7)

Figure 8

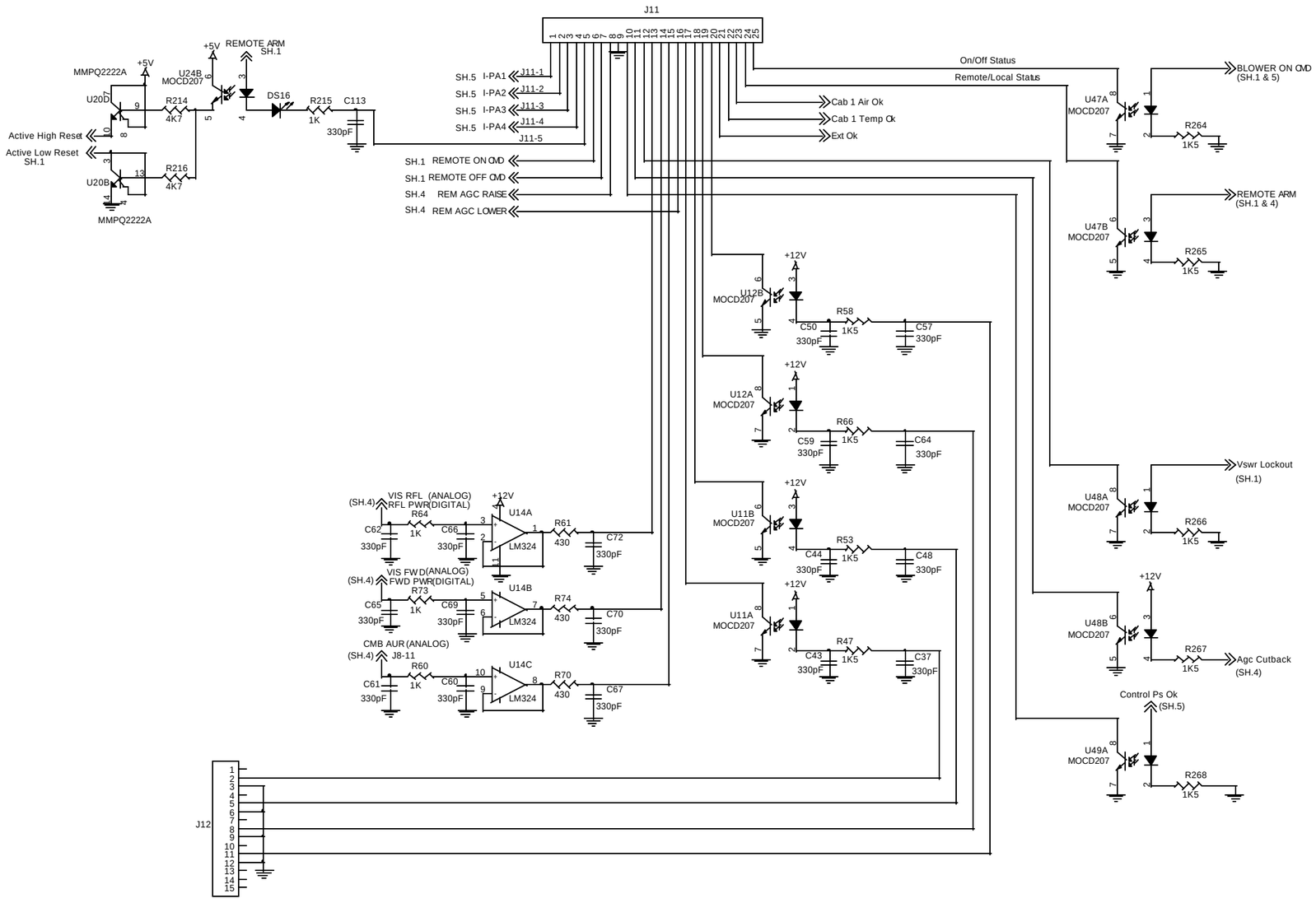
J11
MMPQ2222A
+5V
U20D
R214
4K7
U24B
MOCD207
REMOTE ARM
SH.1
DS16
R215
1K
C113
330pF
Active High Reset
Active Low Reset
SH.1
U20B
R216
4K7
MMPQ2222A
SH.5 I-PA1 J11-1
SH.5 I-PA2 J11-2
SH.5 I-PA3 J11-3
SH.5 I-PA4 J11-4
J11-5
SH.1 REMOTE ON CMD
SH.1 REMOTE OFF CMD
SH.4 REM AGC RAISE
SH.4 REM AGC LOWER
On/Off Status
Remote/Local Status
Cab 1 Air Ok
Cab 1 Temp Ok
Ext Ok
U47A
MOCD207
R264
1K5
BLOWER ON CMD
(SH.1 & 5)
U47B
MOCD207
R265
1K5
REMOTE ARM
(SH.1 & 4)
+12V
U12B
MOCD207
R58
1K5
C50
330pF
C57
330pF
U12A
MOCD207
R66
1K5
C59
330pF
C64
330pF
U11B
MOCD207
R53
1K5
C44
330pF
C48
330pF
U11A
MOCD207
R47
1K5
C43
330pF
C37
330pF
U48A
MOCD207
R266
1K5
Vswr Lockout
(SH.1)
U48B
MOCD207
R267
1K5
Agc Cutback
(SH.4)
Control Ps Ok
(SH.5)
U49A
MOCD207
R268
1K5
VIS RFL (ANALOG)
(SH.4) RFL PWR(DIGITAL)
R64
1K
C62
330pF
C66
330pF
U14A
LM324
R61
430
C72
330pF
VIS FWD(ANALOG)
(SH.4) FWD PWR(DIGITAL)
R73
1K
C65
330pF
C69
330pF
U14B
LM324
R74
430
C70
330pF
CMB AUR (ANALOG)
(SH.4) J8-11
R60
1K
C61
330pF
C60
330pF
U14C
LM324
R70
430
C67
330pF
J12

Figure 9

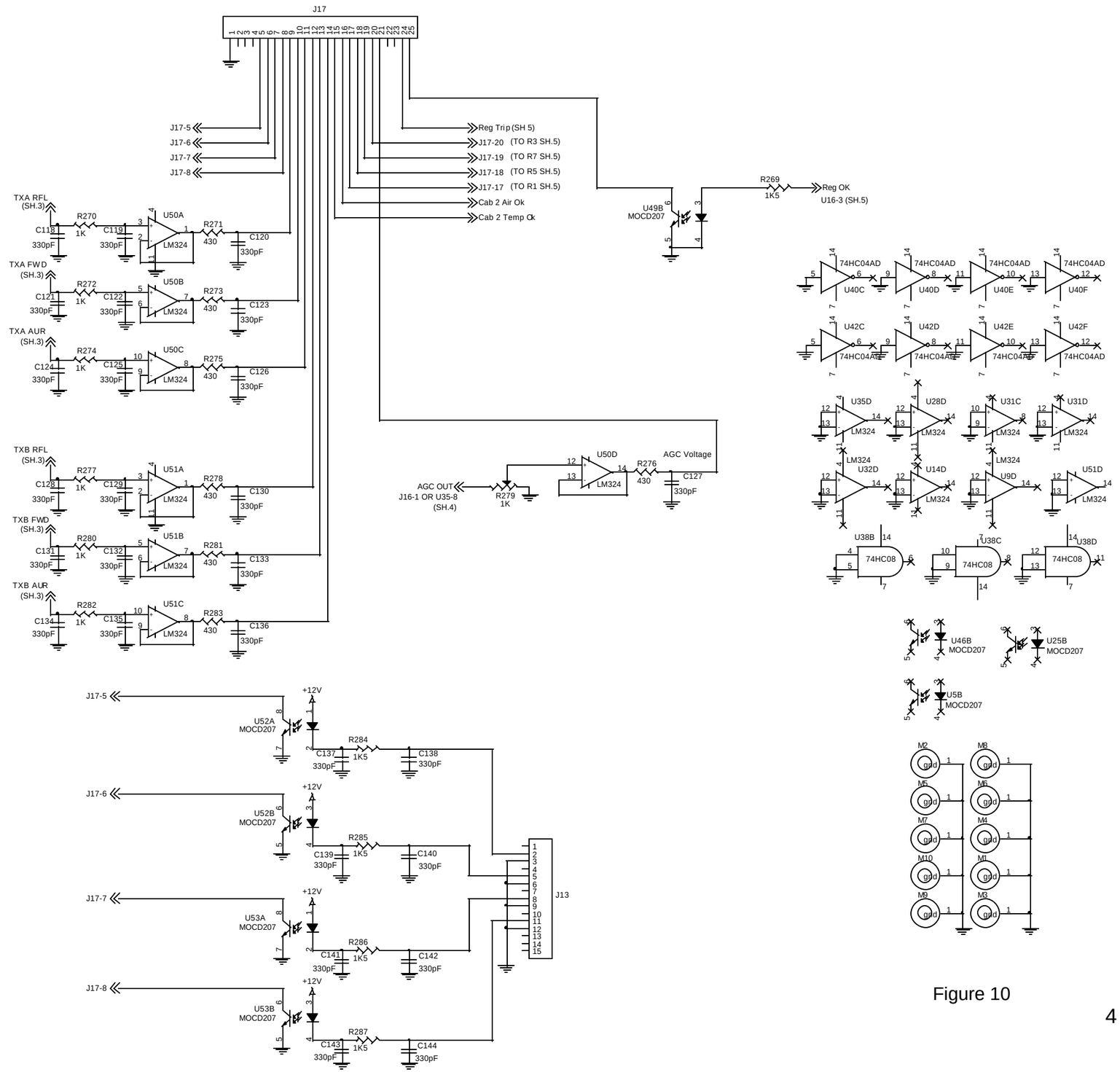
J17
J17-5
J17-6
J17-7
J17-8
Reg Trip (SH 5)
J17-20 (TO R3 SH.5)
J17-19 (TO R7 SH.5)
J17-18 (TO R5 SH.5)
J17-17 (TO R1 SH.5)
Cab 2 Air Ok
Cab 2 Temp Ok
R269
1K5
Reg OK
U16-3 (SH.5)
U49B
MOCD207
TXA RFL
(SH.3)
TXA FWD
(SH.3)
TXA AUR
(SH.3)
TXB RFL
(SH.3)
TXB FWD
(SH.3)
TXB AUR
(SH.3)
U50A
U50B
U50C
U51A
U51B
U51C
LM324
R270
R271
R272
R273
R274
R275
R277
R278
R280
R281
R282
R283
1K
430
C118
C119
C120
C121
C122
C123
C124
C125
C126
C128
C129
C130
C131
C132
C133
C134
C135
C136
330pF
AGC OUT
J16-1 OR U35-8
(SH.4)
R279
1K
U50D
R276
430
AGC Voltage
C127
74HC04AD
U40C
U40D
U40E
U40F
U42C
U42D
U42E
U42F
U35D
U28D
U31C
U31D
U32D
U14D
U9D
U51D
U38B
U38C
U38D
74HC08
U46B
MOCD207
U25B
MOCD207
U5B
MOCD207
M2
M8
M5
M6
M7
M4
M10
M1
M9
M3
gnd
J17-5
J17-6
J17-7
J17-8
+12V
U52A
MOCD207
U52B
MOCD207
U53A
MOCD207
U53B
MOCD207
R284
R285
R286
R287
1K5
C137
C138
C139
C140
C141
C142
C143
C144
J13

Figure 10

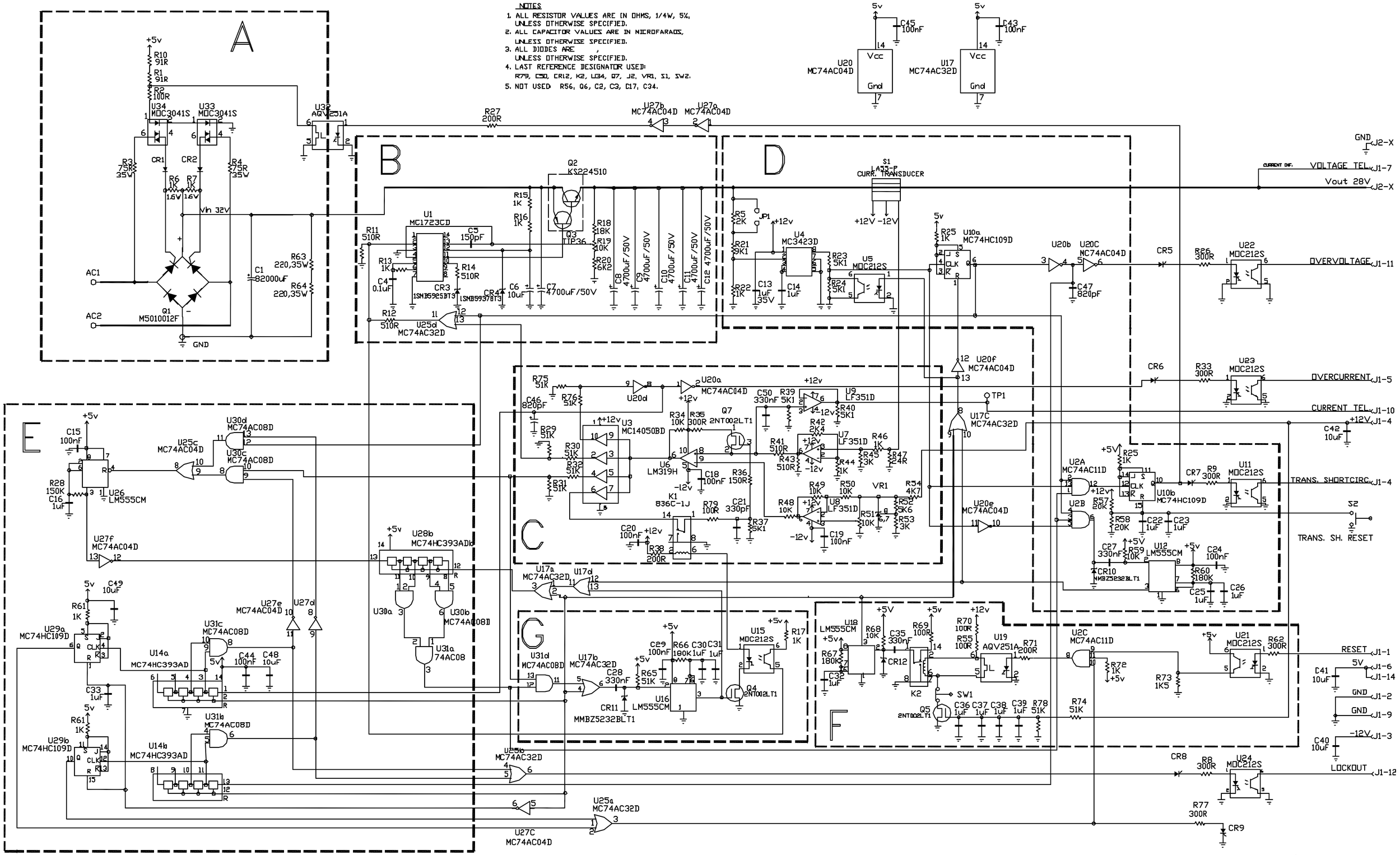

41D1680S Figure 4

SCH. – LIN. REGULATOR

Figure 3a

NOTES

1. ALL RESISTOR VALUES ARE IN OHMS, 1/4W, 5%, UNLESS OTHERWISE SPECIFIED.
2. LAST REFERENCE DESIGNATOR USED: R415, C405, CR402, HY400, J5, L401, VR1, U400.
4. L100 THRU L300– SM FERRITE BEAD.
5. HY1, HY2, HY3, HY100, HY200, HY300, HY400 – 3dB QUADRATURE HYBRID COUPLER.
6. R101 – INSERTION PHASE ADJUST
7. R109 – FINE LEVEL ADJUST
8. R110 – COARSE LEVEL ADJUST. (FACTORY SET)

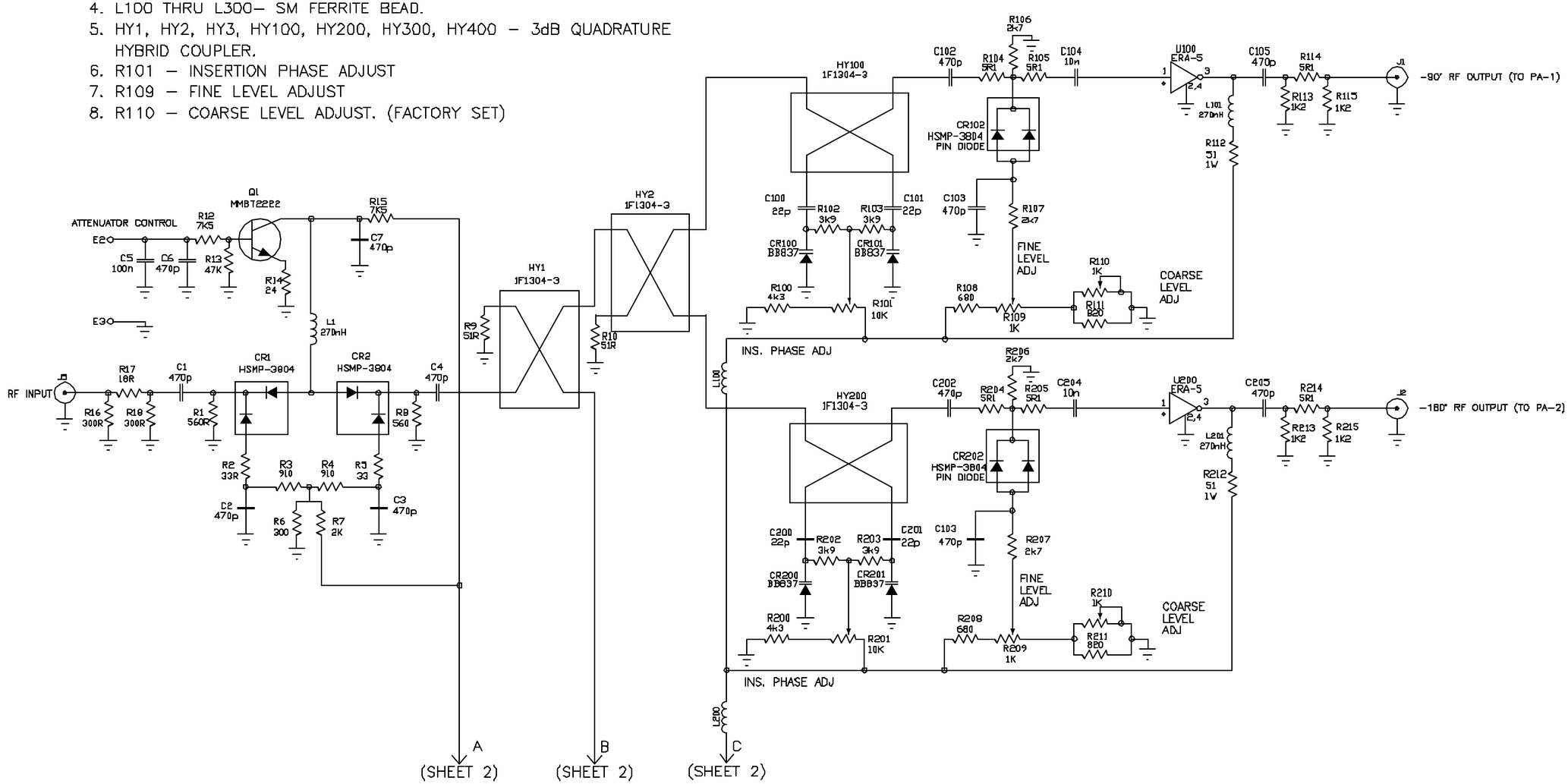

Figure 3b

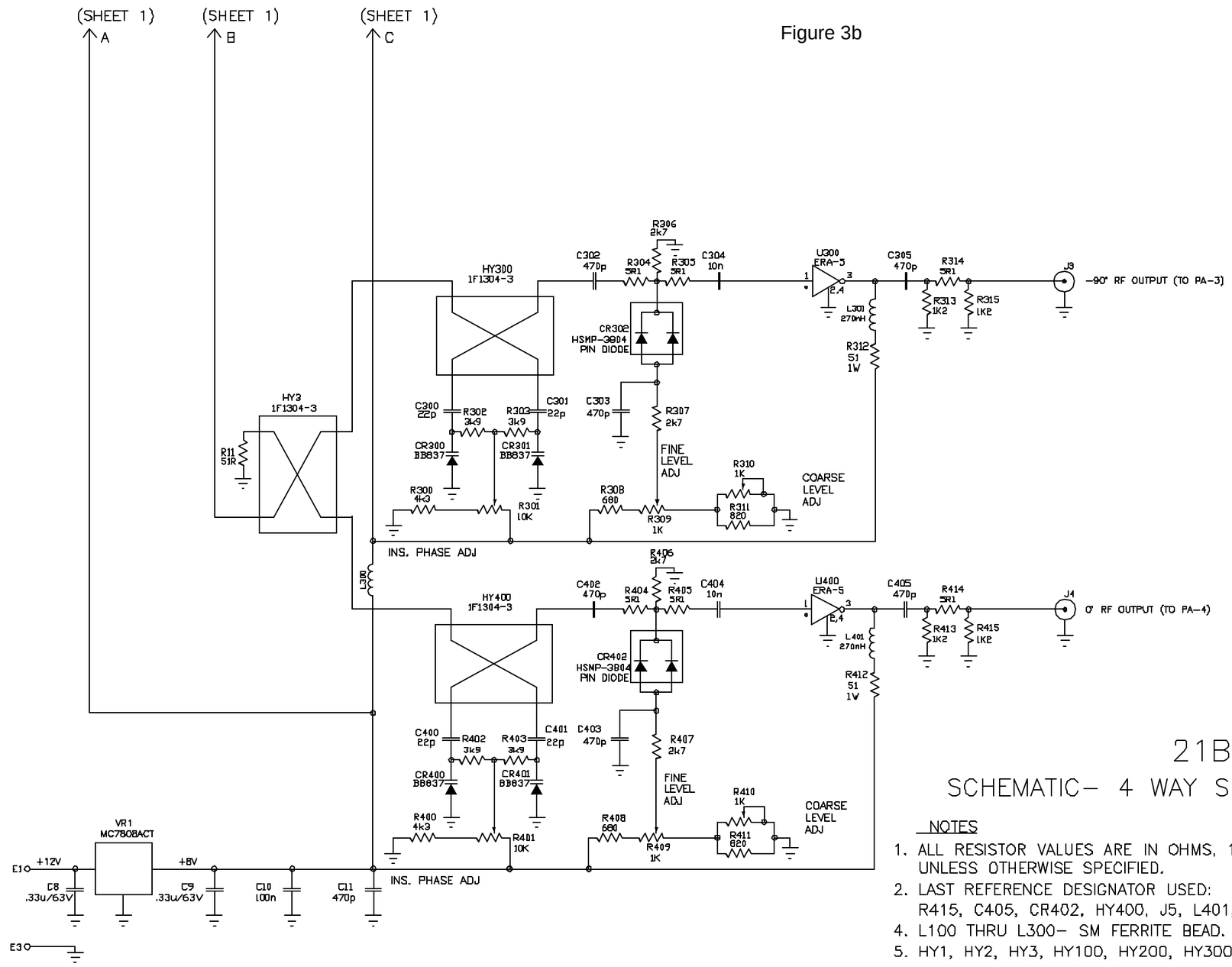

21B1779S2

SCHEMATIC– 4 WAY SPLITTER

NOTES

1. ALL RESISTOR VALUES ARE IN OHMS, 1/4W, 5%, UNLESS OTHERWISE SPECIFIED.
2. LAST REFERENCE DESIGNATOR USED: R415, C405, CR402, HY400, J5, L401, VR1
4. L100 THRU L300– SM FERRITE BEAD.
5. HY1, HY2, HY3, HY100, HY200, HY300, HY400 – – 3dB QUADRATURE HYBRID COUPLER.

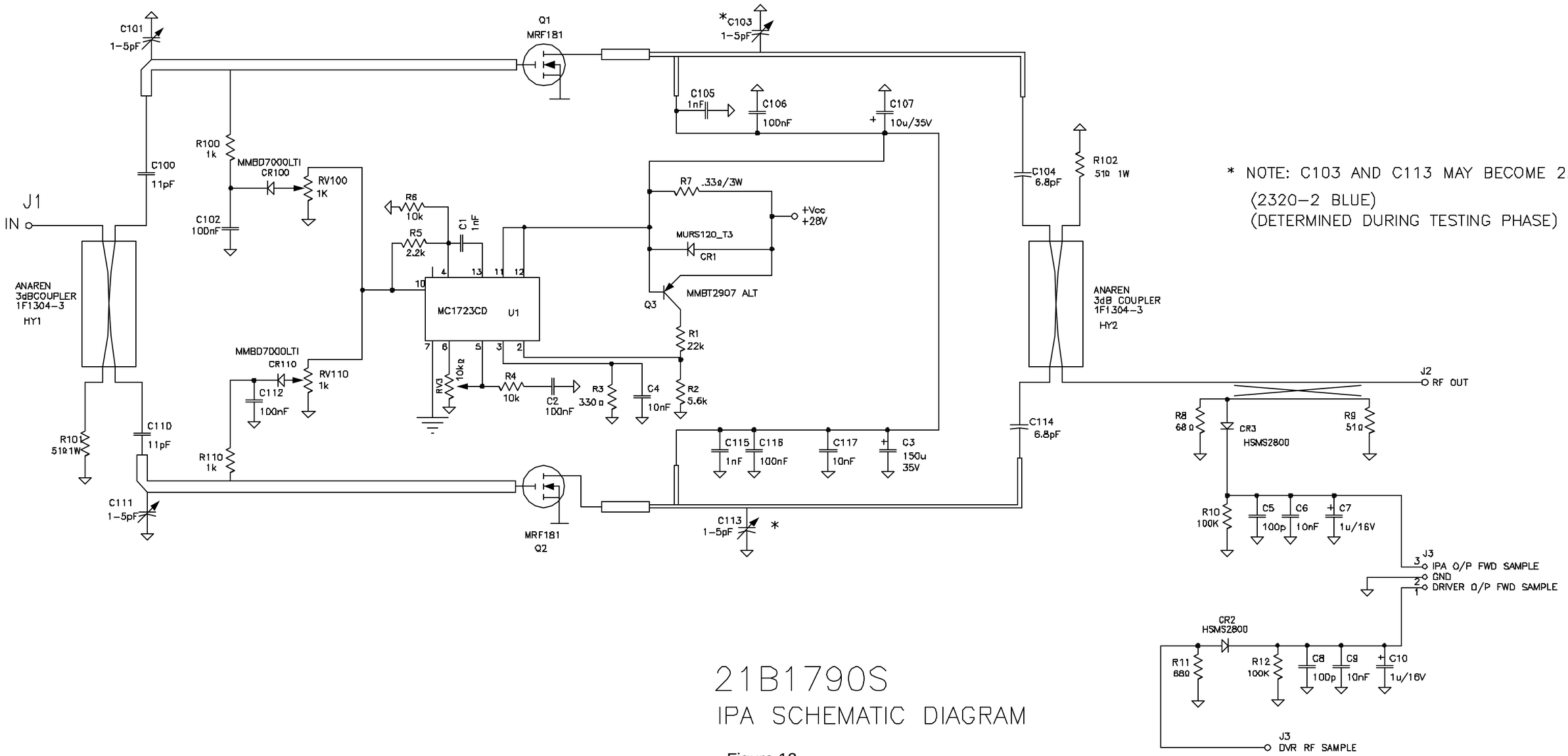

* NOTE: C103 AND C113 MAY BECOME 2.5–10pf
(2320–2 BLUE)
(DETERMINED DURING TESTING PHASE)

21B1790S

IPA SCHEMATIC DIAGRAM

Figure 12

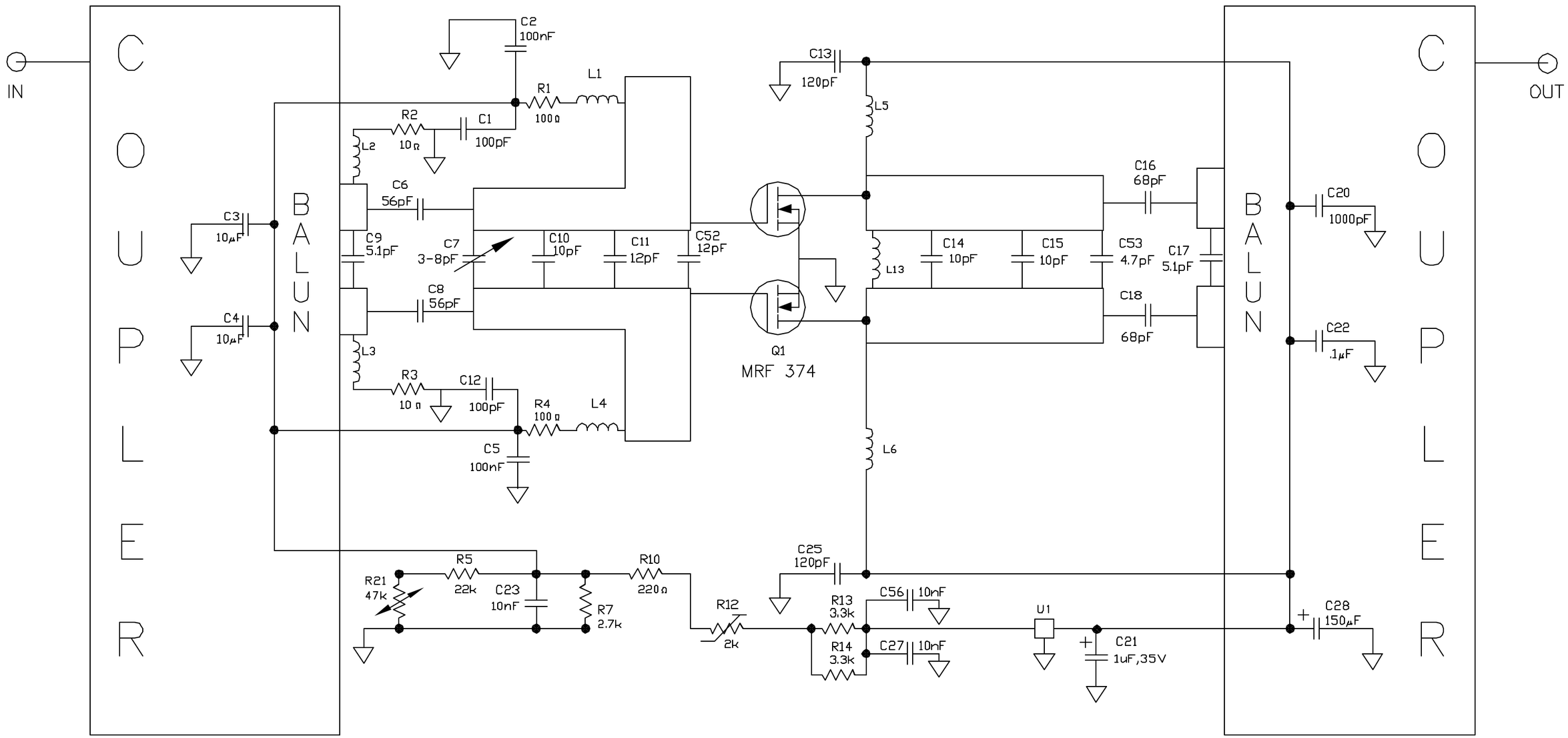

21B1751S

SCHEM—HALF PALLET

Figure 14

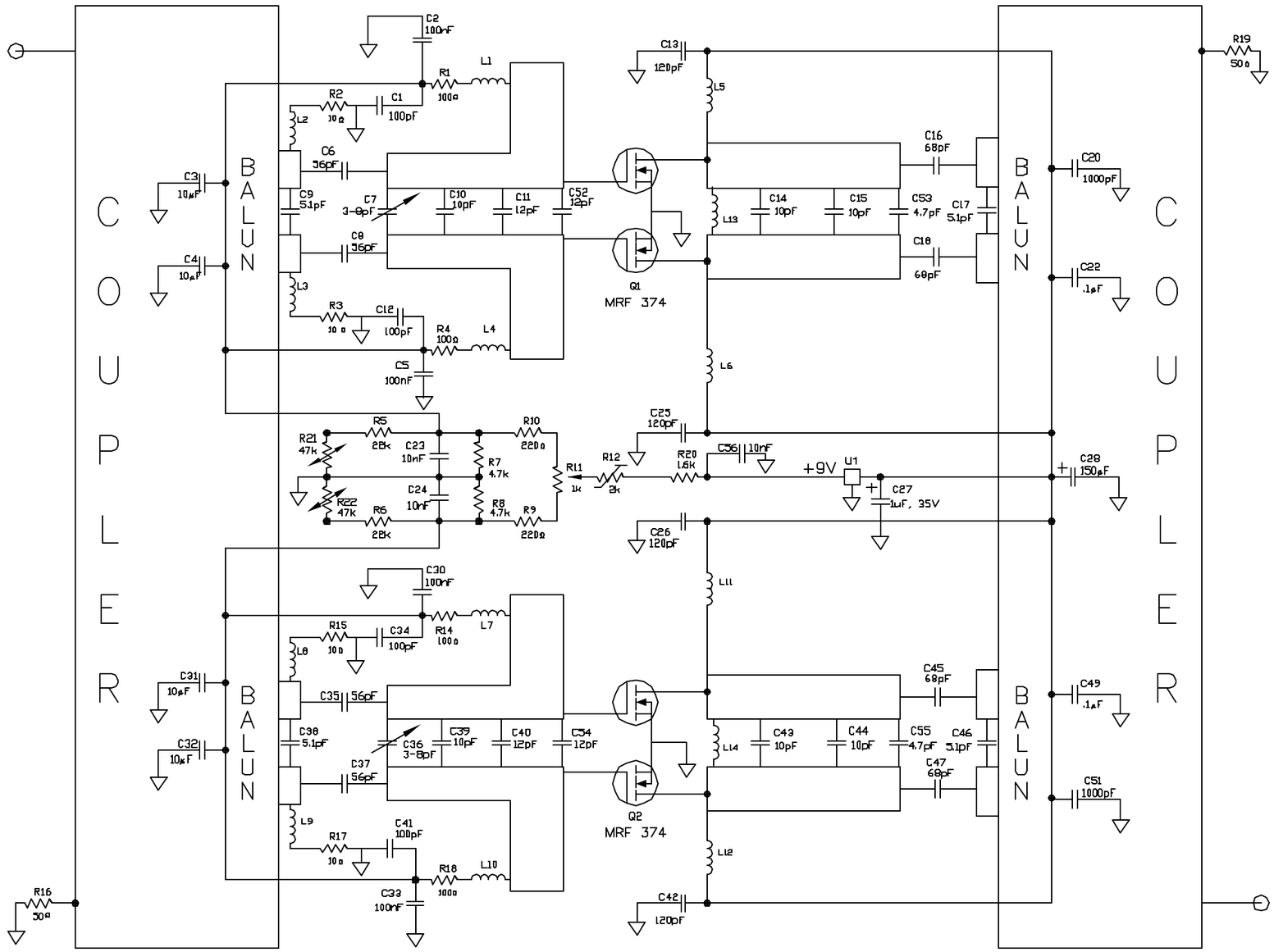

LAST
C 56
R 22
L 14
Q 2

MISSING
C 19
C 21
C 29
C 48
C 50
R 13

21B1639S
SCHEM– PALLET AMPLIFIER

Figure 16