APPLICATION FOR FCC CERTIFICIATION

BZ5MX100U
MODULATOR INPUT
100 WATT UHF TRANSLATOR

EXHIBIT NO.		TITLE	NO.OF PAGES
1		Supporting Statement, Application for FCC Certification of BZ5MX100U	5
2		Instruction Manuals	
	2a	100W UHF Amplifier Manual	
	2b	Cadco M369 Operating Manual	
3		Test Measurement Set-up	
4		Frequency Drift vs. Temperature	2
	4a	Modulated Tabulated Data	
	4b	Temperature Test Set-up	
5		Aural Test Set-up	
6		Active Devices and Function List	2
7		FCC Identification Label for BZ5MX100U	
8		Power Measurement Statement	
9		Attenuation/Swept Sidebands Tabulated Data	
10		Video Waveforms	3
	10a	Input Modulated Stair Step	
	10b	Output Unmodulated Stair Step	
	10c	Differential Gain	
	10d	Differential Phase	
11		Group Delay	2
	11a	Overall Group Delay Tabulated Data	
	11b	Overall Group Delay Graph	
12		Audio Frequency Response, 50% Modulation	
13		Audio Frequency Response, 100% Modulation	
14		BZ5MX100U Translator Photos	7
	14a	Photo, Front Overall View of BZ5MX100U	
	14b	Photo, Front View Amplifier	
	14c	Photo, Interior View, Amplifier	
	14d	Photo, Amplifier Rear View with FCC Label	
	14e	Photo, Front View, Power Supply	
	14f	Photo, Interior View, Power Supply	
	14g	Photo, Power Supply View with FCC Label	
15		Engineer’s Statement	

APPLICATION FOR FCC CERTIFICATION
BZ5MX100U
MODULATOR INPUT
100 WATT UHF TRANSLATOR

This application requests authorization for video/audio input to our 100 Watt UHF Translator, BZ5MX100U (Certification applied for). The amplifier will be driven directly by a color television modulator.

The intended use of the BZ5MX100U is to rebroadcast a television translator relay station or other legal source of video and audio.

A paragraph by paragraph reference is given herein, presenting the required additional data to that called for on FCC Form 731 for FCC Certification of BZ5MX100U 100 Watt UHF Translator. Exhibits are attached to authenticate this application. If further data is required, it will be furnished on request.

The unit tested specifically for this application was operated on Channel 21. This channel was chosen to provide protection to and from existing radio services, and to facilitate the measurement of possible spurious products conducted or radiated from the 100 Watt UHF Translator.

The results noted here are "worse case" unless otherwise noted. The input signals used in the tests were generated by a color bar generator driving a Cadco Modulator which is typically the modulator used. However, due to varying customer requirements, other modulators are available on customer request. The published specifications on any modulator used in this equipment will meet or exceed FCC specifications. The output of the 100 Watt UHF Translator was properly terminated with a resistive type RF load.

2.1033(b)(1):	Applicant is the manufacturer of the equipment. See FCC Form 731
2.1033(b)(2):	See FCC Form 731
2.1033(b)(3):	Exhibit 2 (100W UHF Amplifier Manual, Cadco M369 Operating Manual)
2.1033(b)(4):	Exhibit 6 (Active Devices and Function List)
2.1033(b)(5,6,7):	See also, the paragraph by paragraph summary of compliance with Part 74, Sub-part G of the FCC Commission Rules that follow.

PART 74.750(c)(1):
The frequency stability of this equipment as measured per Part 2.1055 of the rules is much better than required over the specified range of the input voltage and temperature.

PART 74.761(a):
The frequency stability of the visual carrier is totally dependent upon the modulator. Exhibits 4a and 4b document the measurements made, including method and equipment. Modulator output frequency can be, and is normally set to zero deviation at the output channel. As shown in Exhibit 4a, the typical characteristic variation due to temperature is less than ±.002%. This is true for all modulator channels.

PART 74.750(c)(2):
Observations were made on a properly operating translator video to Channel 21 using a Hewlett-Packard 8591E Spectrum Analyzer with a cut to frequency dipole antenna at 10 meters from the translator and rotated to detect maximum radiation. The following signals were present:

		SPECIFICATION	
FREQUENCY(MHz)	SOURCE	LIMIT uV	MEASURED uV
1374.50	2nd Harmonic	700	100
559.00	LO	238133	10

Radiation from the modulator was nil. No spurious products could be detected at 10 meters that were less than 90dB down.

Antenna terminal measurements with the 8591E Spectrum Analyzer showed no change due to the modulator since the power amplifier stages are not affected by this modulation.

The above tests were performed using the same equipment hook up and methods described in Exhibit 3. The translator test data compiled for this application was video to Channel 21. Translator operating with a standard video test signal input (modulated stair step and color burst) and a modulated audio carrier at –10dB of peak visual. Results are typical of performance on all channels.

PART 74.750(c)(3)(ii):
Variation of input voltage ±15% (reference +24VDC or 120VAC) during the temperature tests resulted in no discernible frequency variation traceable to the power supply. This is reasonable due to the modulator's internal regulation.

PART 74.750(c)(4):
The stability of the modulator's self-generated RF carrier must be considered to determine the overall 100 Watt UHF Translator's frequency stability. Exhibits 4a and 4b document the performance measurements made including methods and equipment.

PART 74.750(c)(5):
This equipment meets all the requirements for unattended operation. A description of the automatic control circuitry can be found in Exhibit 2a.

PART 74.750(c)(6):
Measurements can be taken while the equipment is in operation. Normal operating constants of the power output stage average +28 volts at 13 amps.

PART 74.750(c)(7) AND PART 74.783(a)(2):
Station identification requirements will be supplied by the originating station.

PART 74.750(c)(8):
Wiring, shielding and construction are in accordance with accepted principles of good engineering practice. Apparatus is constructed on an aluminum chassis suitably protected to resist corrosion. Power circuits are fused and overload protected by automatic shutdown.

PART 74.750(d)(1):
This equipment meets the requirements of Part 73.687(a)(1) and Part 73.687(b)(3) at the final RF output terminal.

It is anticipated that the translator will be driven directly by the demodulator output of an FM microwave repeater. No provision is made for tampering with or adjusting the composite video or audio signal, except depth of video modulation. Therefore, all aspects of the input video signal (Transmission Standard 73.682 and 73.687) are determined solely by the originating television station. This performance data has been obtained with an NTSC signal generator that produces standard video test signals. See Exhibit 10a, 10b, 10c and 10d.

The attenuation characteristics as required by Part 73.687(a)(3) and Part 73.687(a)(4) of the translator are tabulated in Exhibit 9. The field strength of the upper and lower sidebands are well within the prescribed limits. Measurements are made in accordance with Part 73.687(a)(4). This will be measured with each unit shipped.

Exhibit 10 shows photographs of various video test waveforms as seen on the translator, demonstrating that the transmitted waveform is substantially identical to the input. The typical envelope delay response of the modulator as required in Part 73.687(a)(5) will be made on each unit manufactured to ensure that readings meet the FCC specifications. The additional group delay in the translator in negligible. The test equipment and set-up used is described in Exhibit 3. Tabulated data is shown in Exhibit 11a and graphed in Exhibit 11b.

The graphs of Exhibit 10 show linearity of the translator between reference black and white levels.

The audio input of the modulator was measured in accordance with Part 73.687(b). All measurements were made with the equipment adjusted for normal program operation and included all circuits between the modulator input terminal and the antenna output. Test equipment and set-up are shown in Exhibit 5.

Tabulated below, are the frequency response measurements for various percentages of modulation in accordance with Part 73.1570(b)(3). This data is shown in graph form in Exhibits 12 and 13. Note that the measured curves have been drawn offset –1.5dB to show that the measured response is within the prescribed limits.

AUDIO FREQUENCY RESPONSE
REFERENCE 50Hz AT 0dB INTO 600 OHMS

	MODULATION	
FREQUENCY(Hz)	50%	100%
50	0	0
100	-1.45	-1.47
400	-1.41	-1.49
1000	+1.81	+2.29
5000	+7.25	+9.67
10000	+12.07	+14.84
15000	+14.84	+17.67

Tabulated below are the audio harmonic distortion measurements.

AUDIO HARMONIC DISTORTION LEVEL (%)

	MODULATION	
FREQUENCY(Hz)	50%	100%
50	3.44	1.53
100	3.39	1.49
400	3.32	1.48
1000	3.37	1.44
5000	3.27	1.41
10000	*	1.43
15000	*	1.29

* Distortion measurements above 7.5kHz at 50% modulation levels are impractical.

The output noise level (FM measured as prescribed in the band of 50 to 15000Hz) was 55dB below the level representing ±25kHz frequency swing.

The system noise output (AM) in the same band was 50dB below the level representing 100% amplitude modulation.

The output noise measurement had to be performed with the visual carrier operative because of the translator's common visual/aural amplifiers.

PART 74.750(d)(2):
The modulator of this translator will accept audio from the microwave television translator relay station in one of two possible ways. First, when the microwave signal carrier the audio at a separation of 4.5MHz, it will be passed through the translator's modulator multiplexed on the video. Frequency spacing, deviation, and other characteristics including distortion are therefore determined solely by the originating television station.

The sound carrier deviation was monitored while the frequency vs. temperature measurements were taken, see Exhibit 4a. The equipment meets the ±1kHz requirement.

APPLICATION FOR FCC CERTIFICATION
BZ5MX100U
MODULATOR INPUT
100 WATT UHF TRANSLATOR

EXHIBIT 3

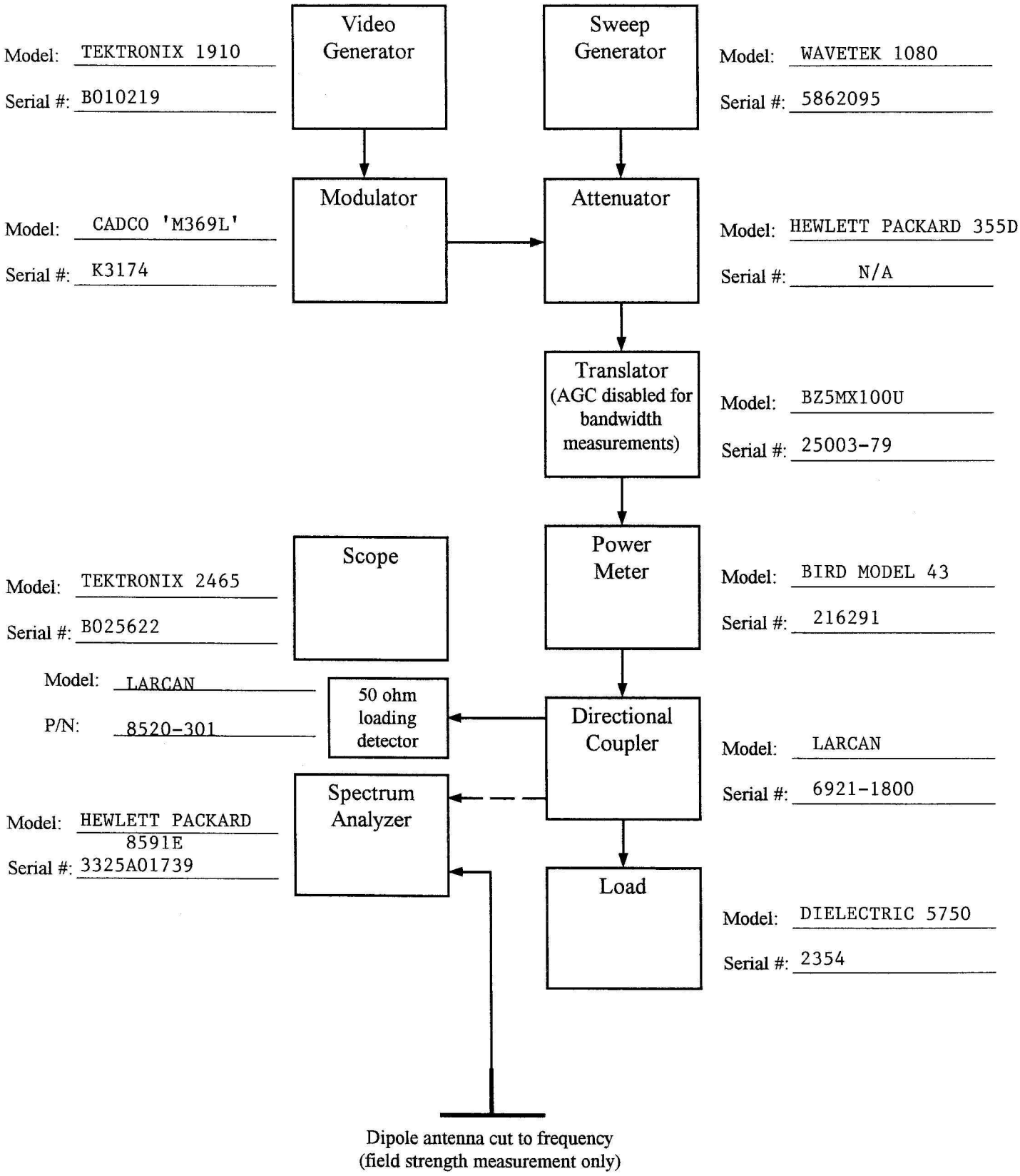

APPLICATION FOR FCC CERTIFICATION
BZ5MX100U
MODULATOR INPUT
100 WATT UHF TRANSLATOR

EXHIBIT 4a

FREQUENCY DRIFT VS. TEMPERATURE
M369 MODULATOR

DEGREES C	MEASURED LO FREQUENCY(Hz)		DEVIATION(Hz)	DEVIATION(%)
+50	**513,242,872**		**-8,408**	**-0.001638**
+40	**513,245,838**		**-5,442**	**-0.001060**
+30	**513,249,389**		**-1,891**	**-0.000368**
+25	**513,251,280**	**REF**	**0**	**+0.0000**
+20	**513,253,253**		**+1,973**	**+0.000384**
+10	**513,256,980**		**+5,700**	**+0.001111**
0	**513,260,002**		**+8,722**	**+0.001699**
-10	**513,262,250**		**+10,970**	**+0.002137**
-20	**513,263,765**		**+12,485**	**+0.002432**
-30	**513,264,088**		**+12,808**	**+0.002495**

APPLICATION FOR FCC CERTIFICATION
BZ5MX100U
MODULATOR INPUT
100 WATT UHF TRANSLATOR

EXHIBIT 4b

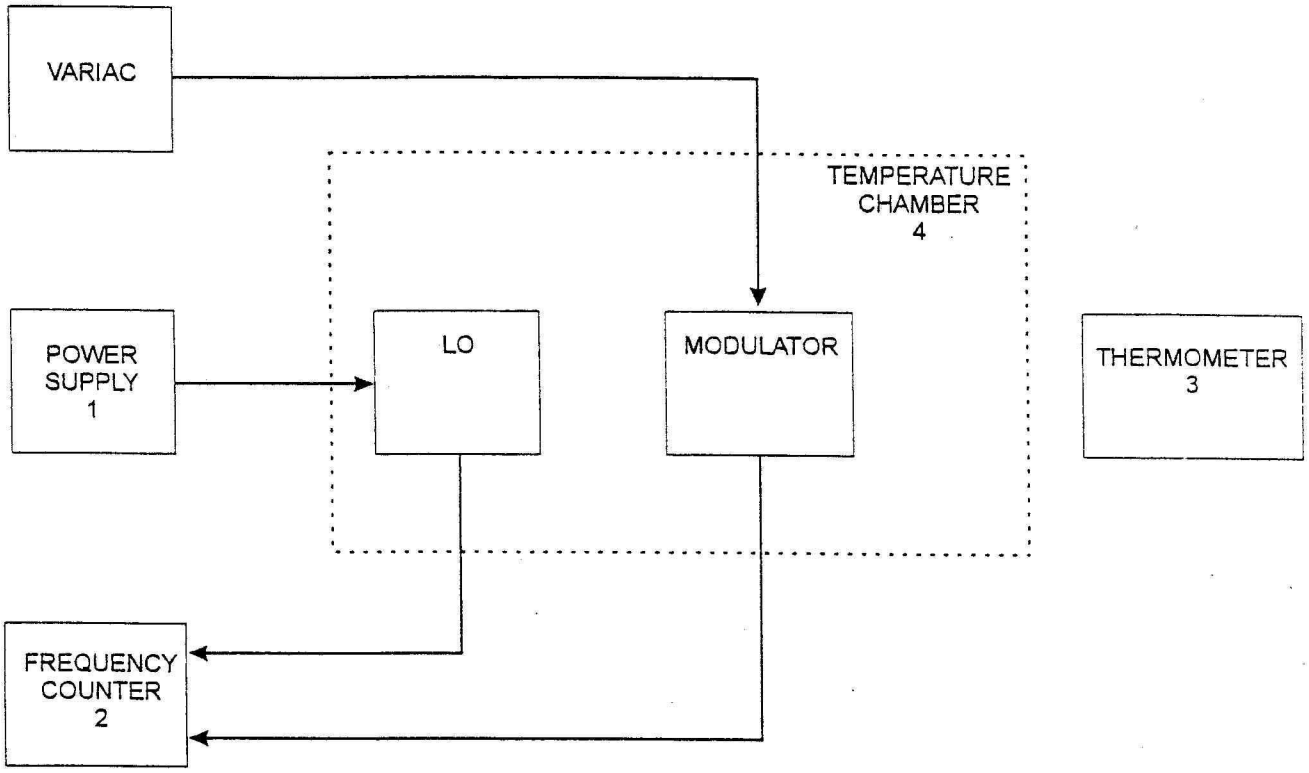

NOTES AND EQUIPMENT LIST

1. POWER SUPPLY - HP6012A - SERIAL NUMBER 2329A-02181
2. FREQUENCY COUNTER - HP5334B - SERIAL NUMBER 2937A05503
3. THERMOMETER - FLUKE 77/80T-150U
4. THERMOSTATICALLY CONTROLLED TEMPERATURE CHAMBER, ASSOCIATED

APPLICATION FOR FCC CERTIFICATION
BZ5MX100U
MODULATOR INPUT
100 WATT UHF TRANSLATOR

EXHIBIT 5
AURAL SET-UP

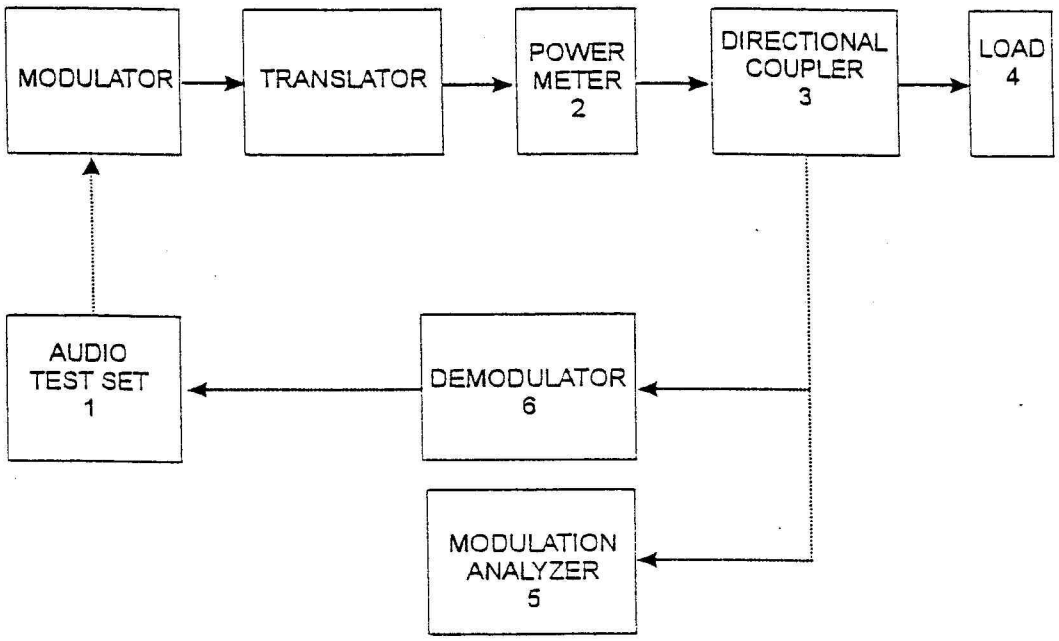

NOTES AND EQUIPMENT LIST

1. AUDIO TEST SET - HP339A - SERIAL NUMBER 1730A00691
2. POWER METER - BIRD MODEL 43 - SERIAL NUMBER 216291
3. DIRECTIONAL COUPLER - CONNECTICUT MICROWAVE - PART NUMBER 250006
4. LOAD - DIELECTRIC 5750 - SERIAL NUMBER 2354
5. MODULATION ANALYZER - HP8901A - SERIAL NUMBER 2911A05212
6. DEMODULATOR - TEKTRONIX 1450-1 - SERIAL NUMBER B020559

APPLICATION FOR FCC CERTIFICATION
BZ5MX100U
MODULATOR INPUT
100 WATT UHF TRANSLATOR

EXHIBIT 6

ACTIVE DEVICES AND FUNCTION LIST

MODULE: POWER AMPLIFIER #21B1389G2

DEVICE	TYPE	FUNCTION
HY1, HY2	1F1304-3	Hybrid Coupler
Q1, Q2	MRF184	Power Mosfet
U1	LM317T	Positive Voltage Regulator

MODULE: INTERMEDIATE POWER AMPLIFIER #2 #21B1389G1

DEVICE	TYPE	FUNCTION
HY1, HY2	1F1304-3	Hybrid Coupler
Q1, Q2	MRF184	Power Mosfet
U1	LM317T	Positive Voltage Regulator

MODULE: INTERMEDIATE POWER AMPLIFER #1 #21B1324G2

DEVICE	TYPE	FUNCTION
HY1, HY2	1F1304-3	Hybrid Coupler
Q1, Q2	MRF181S	Power Mosfet
Q3	MMBT2907	Small Signal Transistor
U1	MC1723	Positive Voltage Regulator

MODULE: FRONT END #21B1473G1

DEVICE	TYPE	FUNCTION
HY1, HY2	1F1304-3	Hybrid Coupler
Q1	MMBT2222	Small Signal Transistor
U1	MHL8118	Hybrid Amplifier
U2	LM358	Operational Amplifier
U3	78M12	Positive Voltage Regulator
U4	78L05	Positive Voltage Regulator

MODULE: +28VOLT VOLTAGE REGULATOR #20B1810G1

DEVICE	TYPE	FUNCTION
Q1, Q2	2N3501	Small Signal Transistor
Q3, Q5	TIP122	Bipolar Power Transistor
Q4, Q6	2N4402	Small Signal Transistor
U1, U2	MC1723	Positive Voltage Regulator
U2, U4	2SA1302	Positive Voltage Regulator

MODULE: POWER SUPPLY #40D2207G1

DEVICE	TYPE	FUNCTION
K1	S87R5D2B1D1-12	Start Relay

APPLICATION FOR FCC CERTIFICATION
BZ5MX100U
MODULATOR INPUT
100 WATT UHF TRANSLATOR

EXHIBIT 6

ACTIVE DEVICES AND FUNCTION LIST

MODULE: CONTROL BOARD #30C1829G3

DEVICE	TYPE	FUNCTION
K1	DS1E-SL2-DC12V	Latching Relay
Q1, Q2	MPS8098	Bipolar Transistor
U1, U4	MC14538	Dual Multivibrator
U3	ILQ1	Opto Isolator
U5	MC14081	Quad 2 Input Gate

MODULE: METERING BOARD #20B1235G8

DEVICE	TYPE	FUNCTION
Q1, Q2	MPS8598	Buffer Amplifier
U1, U2, U3	LM358	Operational Amplifier
VR1	78L12	Positive Voltage Regulator

APPLICATION FOR FCC CERTIFICATION
BZ5MX100U
MODULATOR INPUT
100 WATT UHF TRANSLATOR

EXHIBIT 7

FCC IDENTIFICATION LABEL

APPLICATION FOR FCC CERTIFICATION
BZ5MX100U
MODULATOR INPUT
100 WATT UHF TRANSLATOR

EXHIBIT 8

Power requirements for the 100 Watt UHF Translator were determined as follows:

1. The translator's visual power meter measures the peak visual power by reading the average levels of a detected sample of the output. The meter is calibrated by multiplying the above visual power reading by 168%. The visual metering circuitry has a negligible response to the aural power due to the large (>10MHz) detector bandwidth. When the detector bandwidth is this large, the detector does not peak detect the intercarrier beat product.

2. The aural power is measured by reading the peak level of the detected 4.5MHz intercarrier product. The level of this product has a direct correspondence to the aural power and is independent of the visual power as long as the peak visual power exceeds the aural power. This is always true for normal operation.

BZ5MX100U
POWER MEASUREMENTS

MEASURED VISUAL POWER NOTE 1	MEASURED AURAL POWER NOTE 2	SUPPLY CURRENT TO OUTPUT DEVICES VISUAL ONLY NOTE 3	SUPPLY CURRENT TO OUTPUT DEVICES VISUAL & AURAL NOTE 3
59.5 WATTS	5.95 WATTS	13 AMPS	13 AMPS

NOTE 1: Measured on the Model 43 Bird Wattmeter with the visual carrier modulated by the standard synchronizing signal at 75% of peak amplitude and the aural carrier disabled.

NOTE 2: Measured on the Model 43 Bird Wattmeter with the visual carrier disabled.

NOTE3: The voltage across the output devices on all models is +28 volts. The output devices are operated Class A.

APPLICATION FOR FCC CERTIFICATION
BZ5MX100U
MODULATOR INPUT
100 WATT UHF TRANSLATOR

EXHIBIT 9

ATTENUATION VS. FREQUENCY

MODULATING FREQUENCY REF = VISUAL CARRIER(MHz)	UPPER SIDEBAND	FCC LIMIT(dB)	LOWER SIDEBAND	FCC LIMIT(dB)
+0.2	0	Reference	-	-
-0.5	-0.5		-	-
+0.5	-0.1		-	-
+1.25	-0.3		-20	>-20
+2.0	-0.4		-36	>-20
+2.5	-0.4		-40	>-20
+3.0	-0.3		-42	>-20
+3.5	-0.3		-42	>-20
+3.58	-0.2		-44	>-42
+4.1	-0.3		-46	>-20
+4.18	-0.2		-46	>-20
+4.75	-20	>-20	-50	>-20
+5.0	-20	>-20	-50	>-20
+6.0	-50	>-20	-50	>-20
+7.0	-50	>-20	-50	>-20
+8.0	-50	>-20	-50	>-20
+9.0	-50	>-20	-50	>-20
+10.0	-50	>-20	-50	>-20

APPLICATION FOR FCC CERTIFICATION
BZ5MX100U
MODULATOR INPUT
100 WATT UHF TRANSLATOR

EXHIBIT 10a

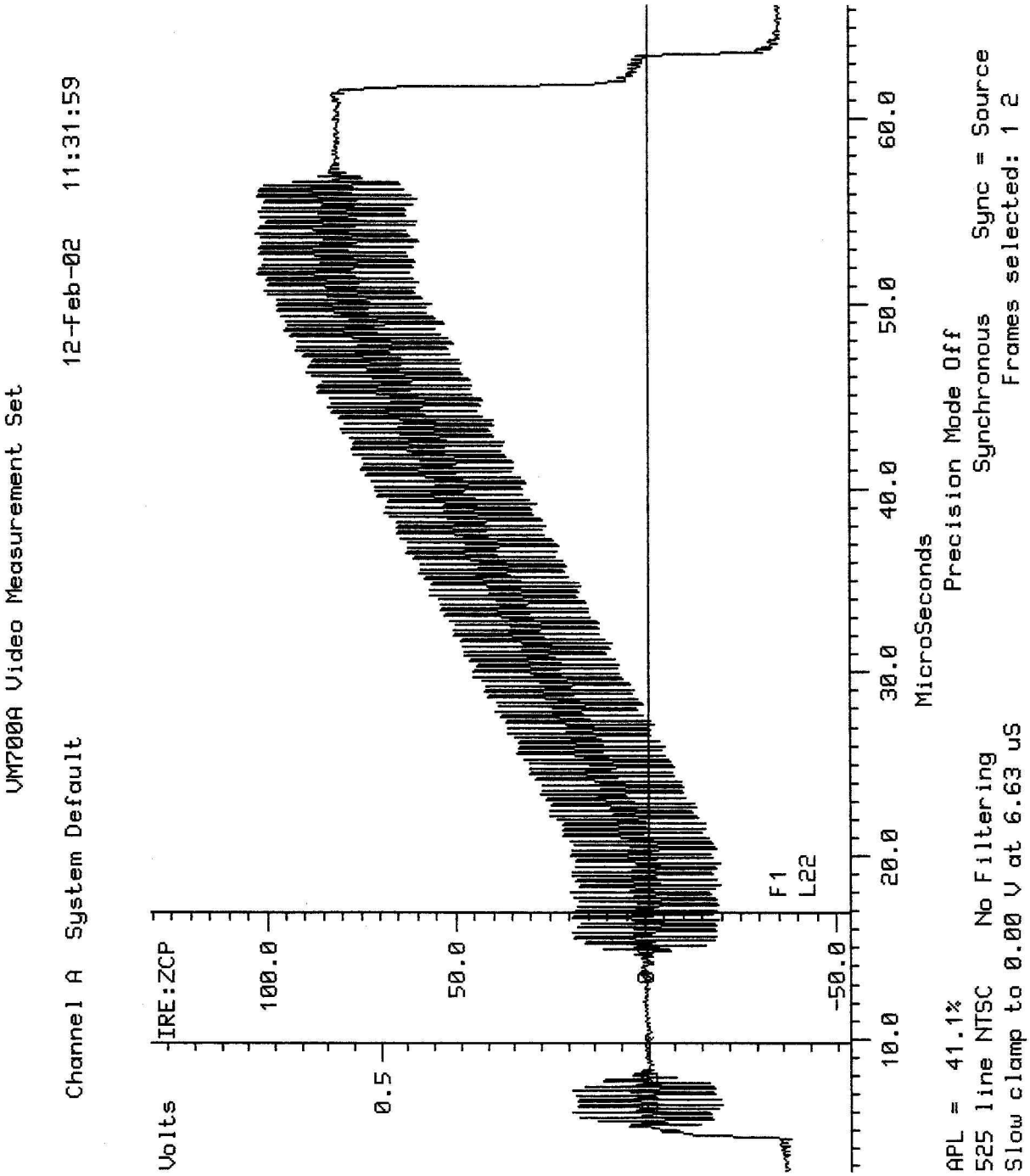

APPLICATION FOR FCC CERTIFICATION
BZ5MX100U
MODULATOR INPUT
100 WATT UHF TRANSLATOR

EXHIBIT 10b

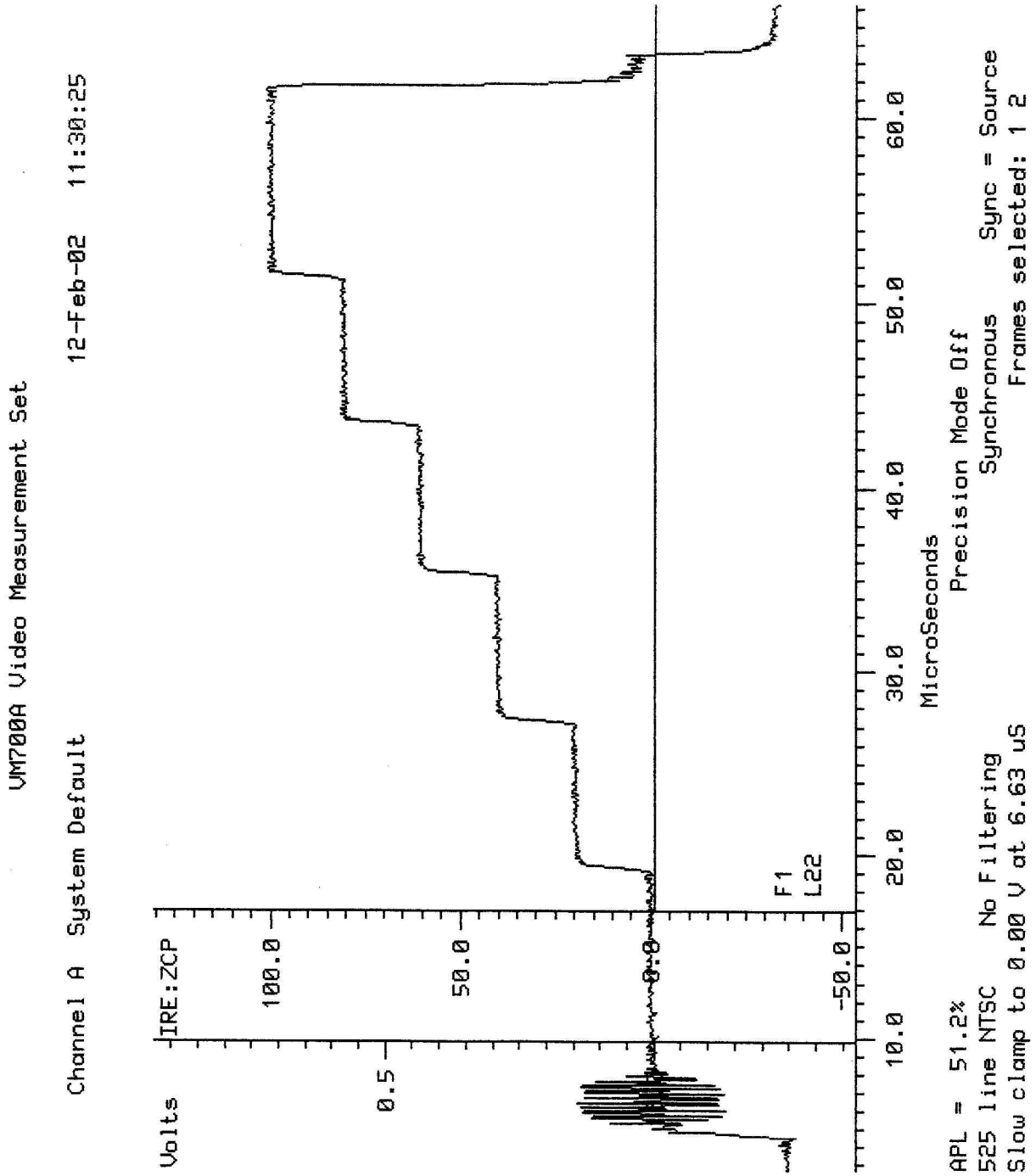

APPLICATION FOR FCC CERTIFICATION
BZ5MX100U
MODULATOR INPUT
100 WATT UHF TRANSLATOR

EXHIBIT 10c

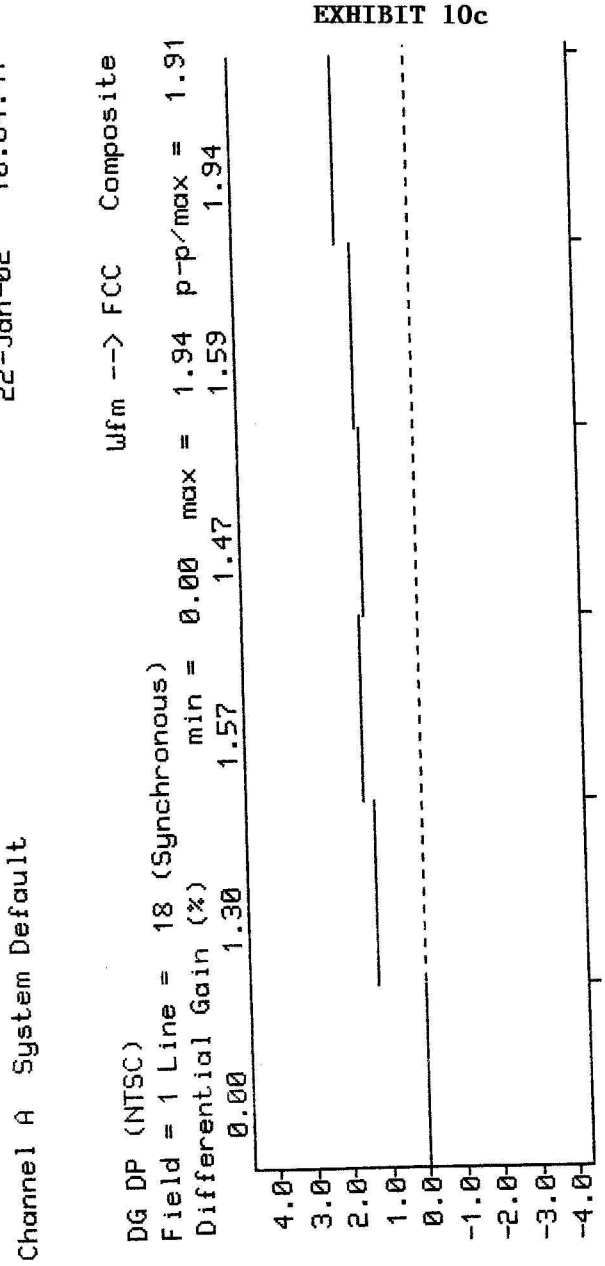

EXHIBIT 10d

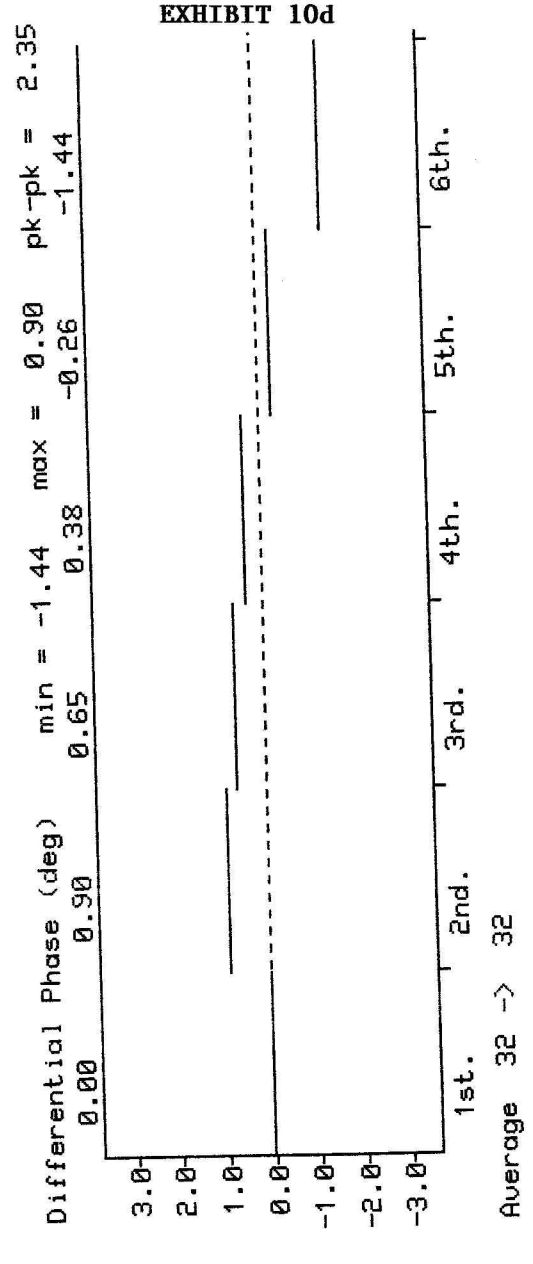

APPLICATION FOR FCC CERTIFICATION
BZ5MX100U
MODULATOR INPUT
100 WATT UHF TRANSLATOR

EXHIBIT 11a

OVERALL GROUP DELAY

FREQUENCY(MHz)	OVERALL DELAY(nS)
0.20	0 (Reference)
0.40	-30
0.60	-30
0.80	-50
1.0	-55
1.20	-55
1.40	-30
1.60	-45
1.80	-30
2.0	-45
2.20	-30
2.40	-20
2.60	-30
2.80	-10
3.0	-60
3.20	-55
3.40	-120
3.58	-160
3.80	-240
4.0	-300
4.18	-320

APPLICATION FOR FCC CERTIFICATION
BZ5MX100U
MODULATOR INPUT
100 WATT UHF TRANSLATOR

EXHIBIT 11b

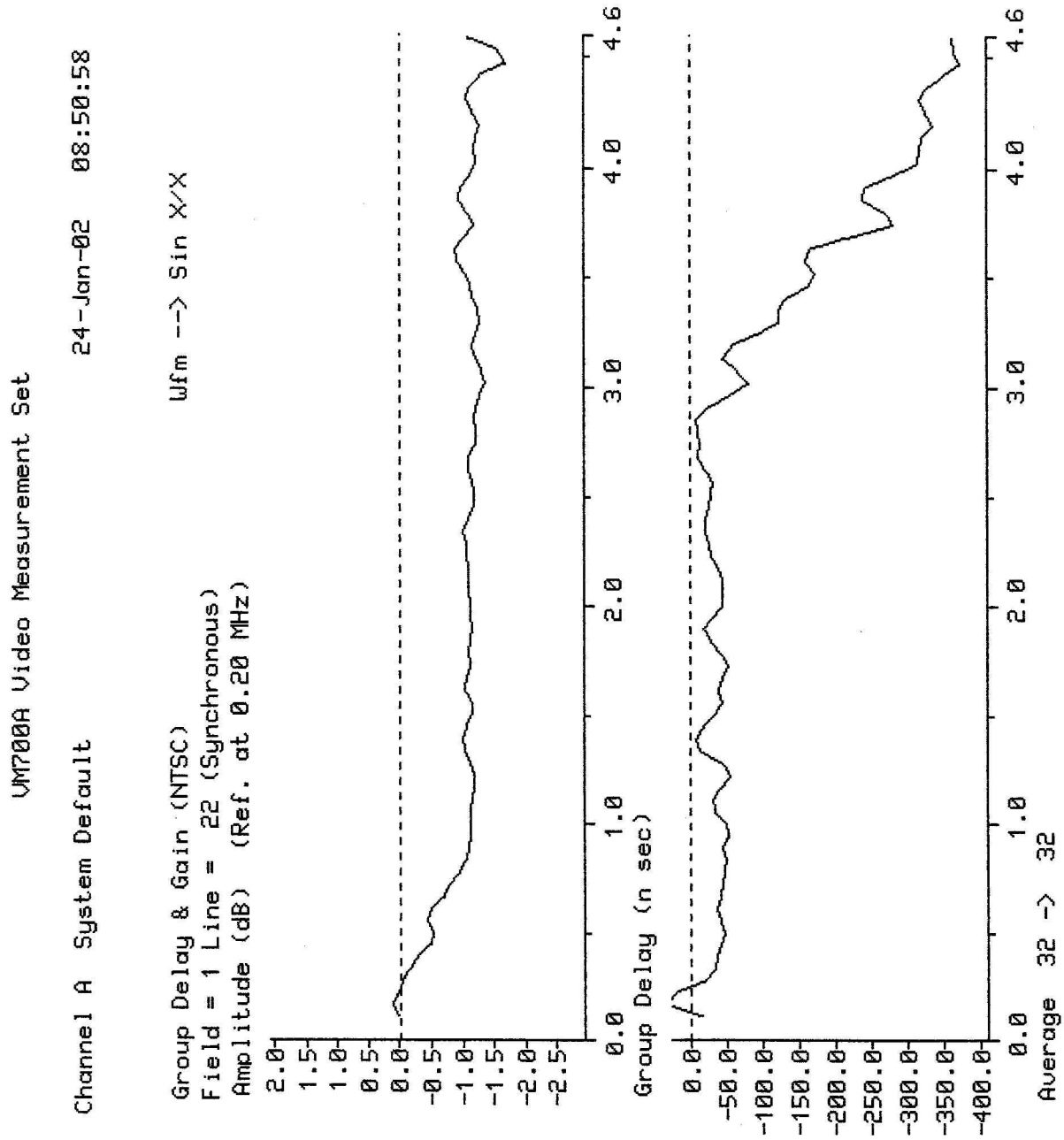

EXHIBIT 12 MODEL NUMBER: BZ5MX100U

AUDIO FREQUENCY RESPONSE 50 % MODULATION

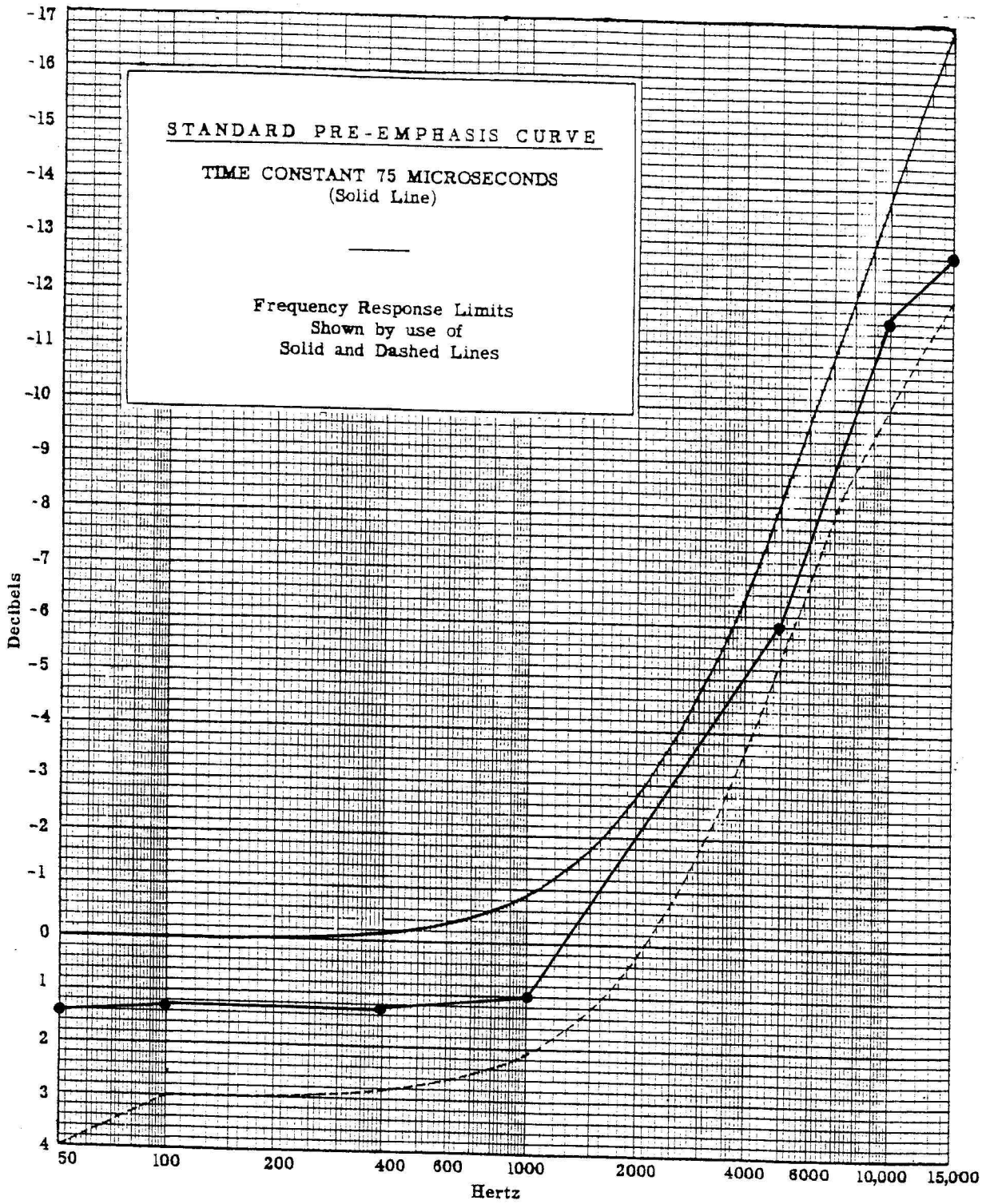

Reference 50 Hz; 0dB = 1.5 dB

EXHIBIT 13 MODEL NUMBER: BZ5MX100U

AUDIO FREQUENCY RESPONSE 100 % MODULATION

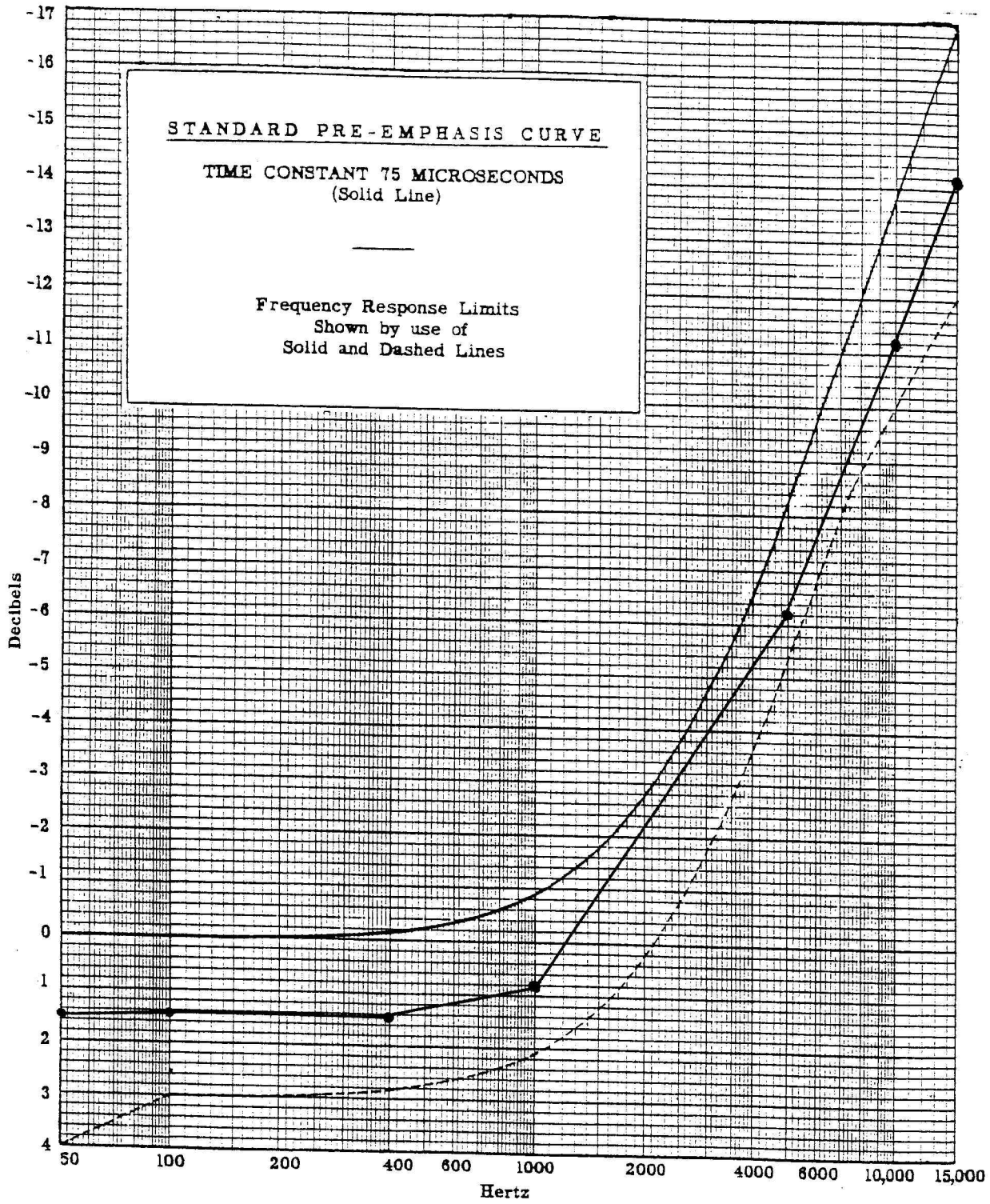

Reference 50 Hz; 0dB = 1.5 dB

APPLICATION FOR FCC CERTIFICATION
BZ5MX100U
MODULATOR INPUT
100 WATT UHF TRANSLATOR

EXHIBIT 14a

PHOTO, FRONT OVERALL VIEW OF BZ5MX100U

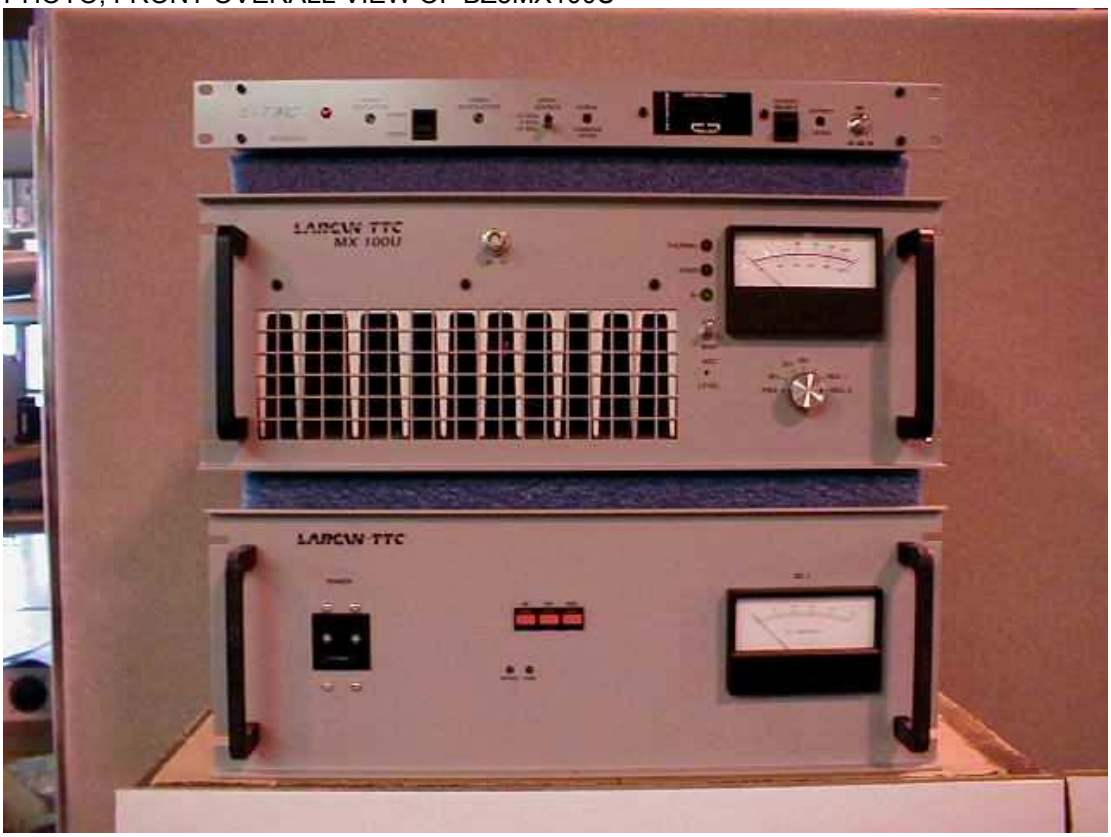

APPLICATON FOR FCC CERTIFICATION
BZ5MX100U
MODULATOR INPUT
100 WATT UHF TRANSLATOR

EXHIBIT 14b

PHOTO, FRONT VIEW AMPLIFIER

APPLICATION FOR FCC CERTIFICATION
BZ5MX100U
MODULATOR INPUT
100 WATT UHF TRANSLATOR

EXHIBIT 14c

PHOTO, INTERIOR VIEW, AMPLIFIER

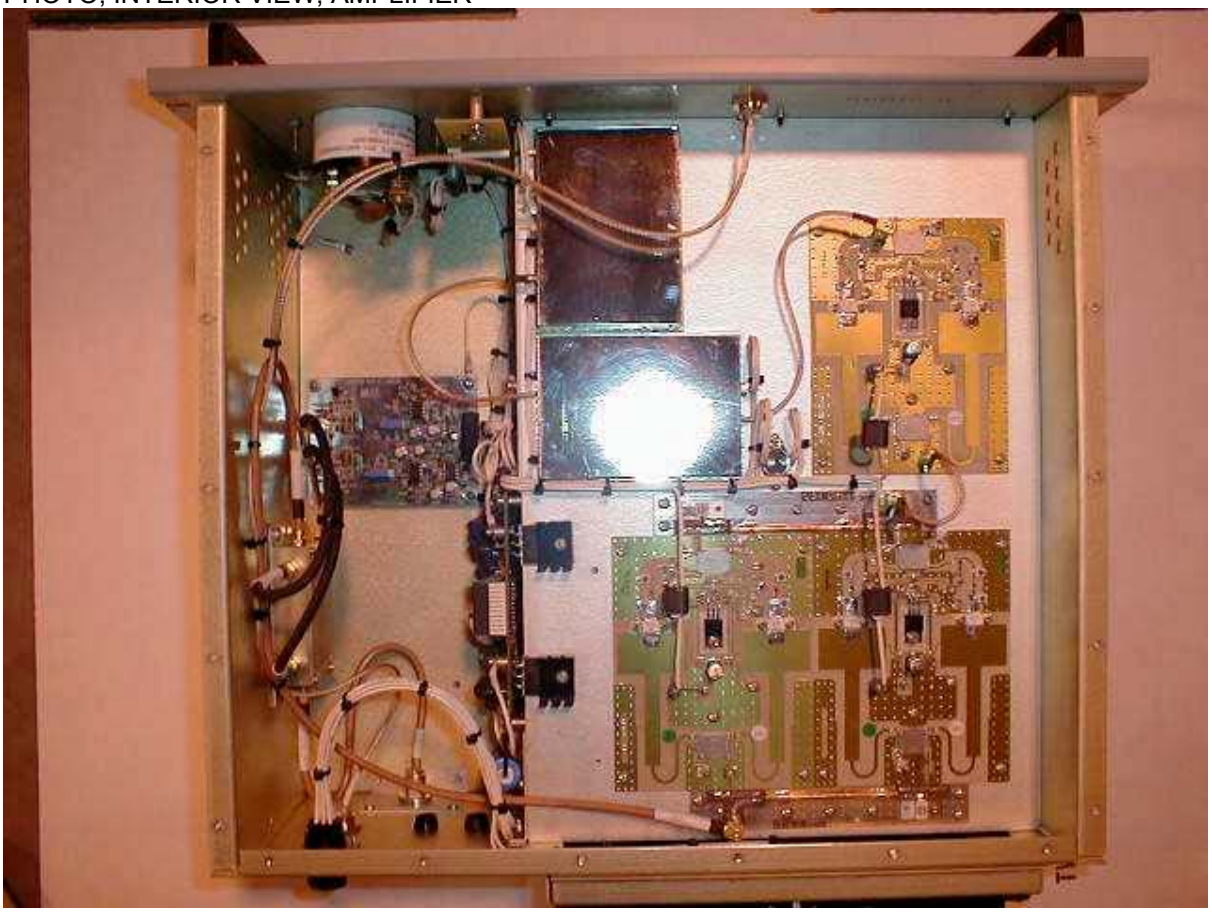

APPLICATION FOR FCC CERTIFICATION
BZ5MX100U
MODULATOR INPUT
100 WATT UHF TRANSLATOR

EXHIBIT 14d

PHOTO, AMPLIFIER REAR VIEW WITH FCC LABEL

APPLICATION FOR FCC CERTIFICATION
BZ5MX100U
MODULATOR INPUT
100 WATT UHF TRANSLATOR

EXHIBIT 14e

PHOTO, FRONT VIEW, POWER SUPPLY

APPLICATION FOR FCC CERTIFICATION
BZ5MX100U
MODULATOR INPUT
100 WATT UHF TRANSLATOR

EXHIBIT 14f

PHOTO, INTERIOR VIEW, POWER SUPPLY

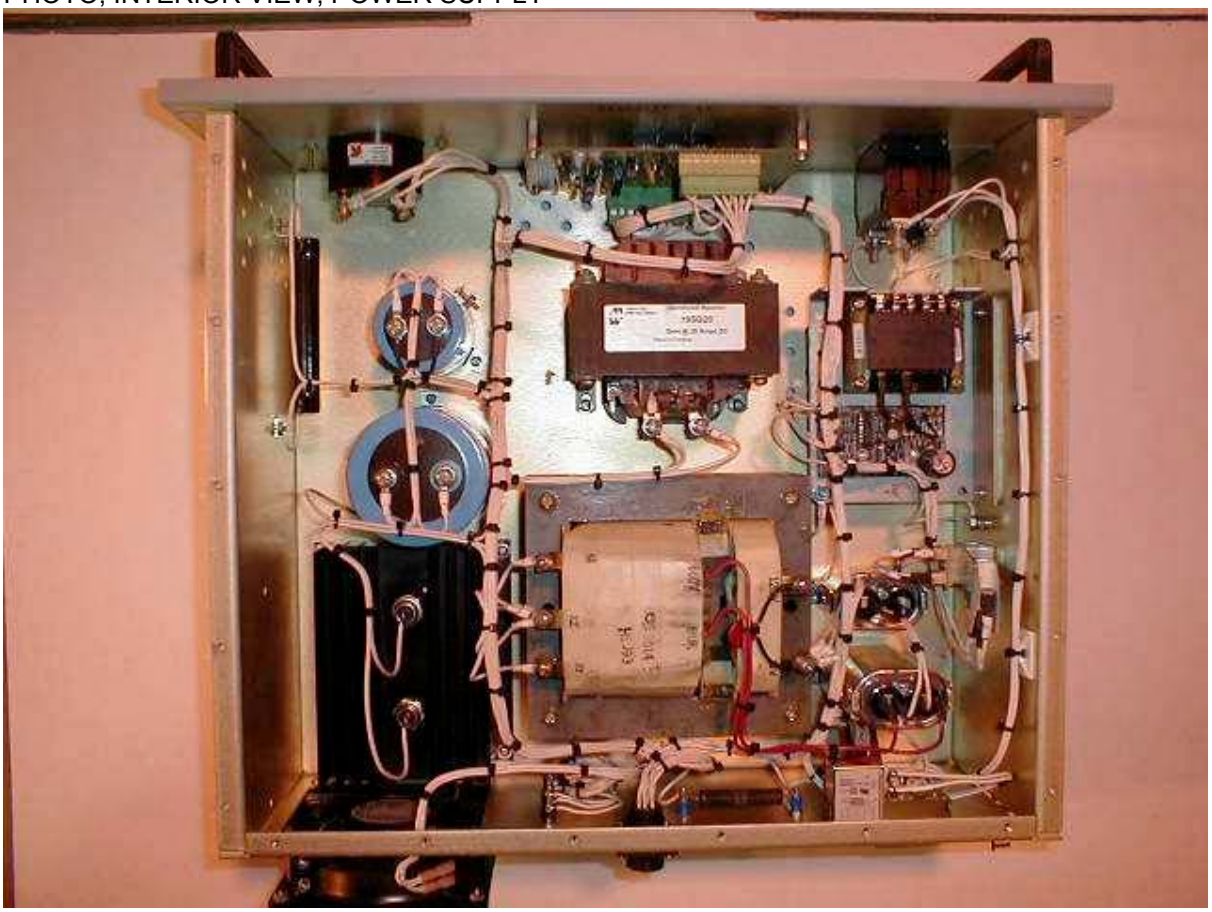

APPLICATION FOR FCC CERTIFICATION
BZ5MX100U
MODULATOR INPUT
100 WATT UHF TRANSLATOR

EXHIBIT 14g

PHOTO, POWER SUPPLY VIEW WITH FCC LABEL

APPLICATION FOR FCC CERTIFICATION
BZ5MX100U
MODULATOR INPUT
100 WATT UHF TRANSLATOR

EXHIBIT 15

ENGINEER'S STATEMENT

I, John Tremblay, do hereby certify that the attached information was prepared by me or under my direction.

_____
John E. Tremblay, P. Eng.
Vice-President Engineering

26 Feb. 2002

_____
Date