# Unit 3

# Video Processor

# 1. Frontal and Back Panel:

## 1.1. Frontal Panel:

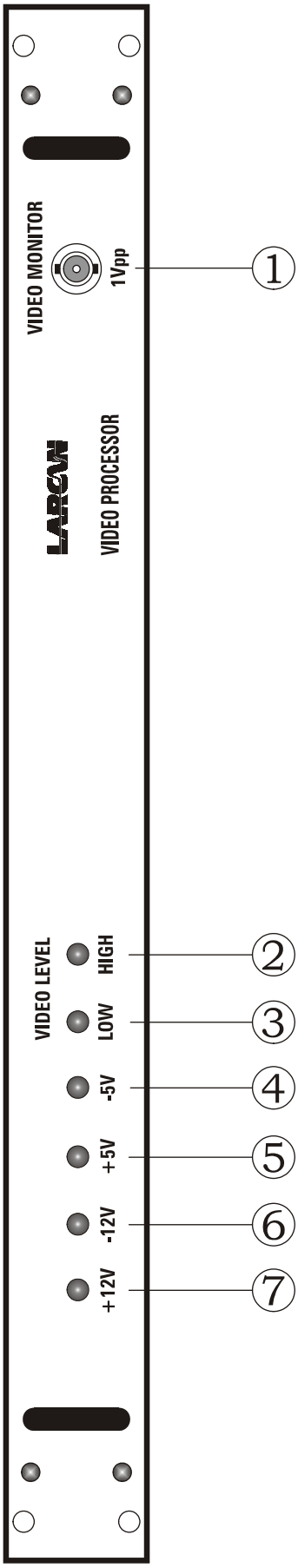


Each element in the panel has the following function:

1. Mon. Vídeo: Can be connected directly to an oscilloscope to monitor the video signal output. It already has a 75 ohm load.

2. High Level: Indicates that video signal input is too high.

3. Low Level: Indicates that video signal input is too low.

4. -5V: Indicates that -5V power supply is working.

5. +5V: Indicates that +5V power supply is working.

6. -12V: Indicates that -12V power supply is working.

7. +12V: Indicates that +12V power supply is working.

## 1.2. Back Panel:

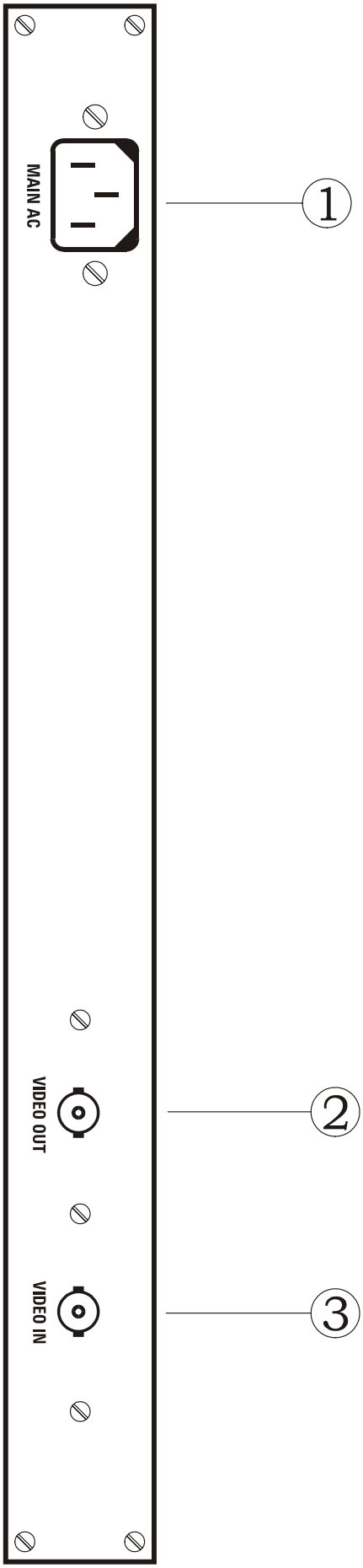


Each element in the panel has the following function:

1. MAIN AC: Power supply input 220V.
2. Output: Video signal output 75 ohm impedance and 1Vpp level. (conector BNC).
3. Input: Video signal input 75 ohm impedance and 0,5 to 1,5 Vpp level. (conector BNC).

# 2. Vídeo Processor:

## 2.1. Function:

The video processor has the following functions: Synchronism compression correction, Automatic gain control (AGC), Differential gain correction and Differential phase correction.

## 2.2. Block diagram:

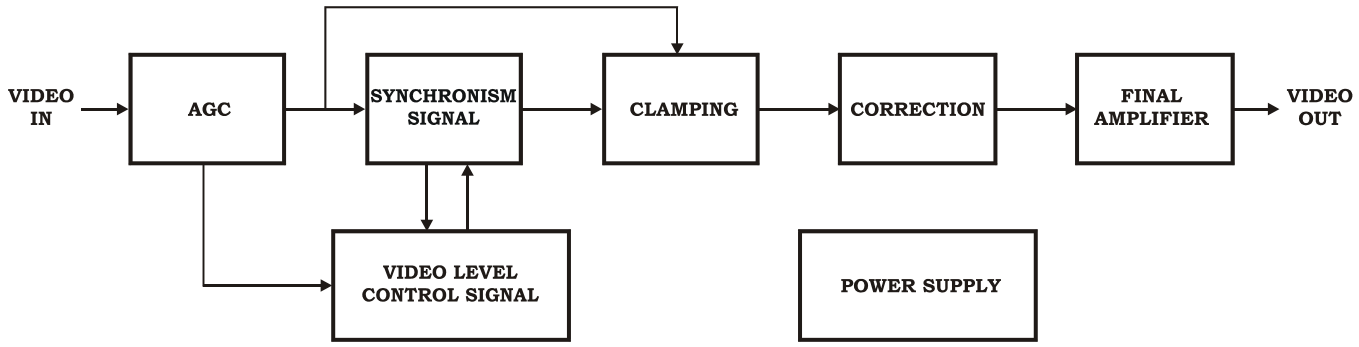


## 2.3. Technical features:

Video input level: _____ 0,5 to 1,5Vpp
Video ouput level: _____ 1Vpp ±0,05Vpp
Compression Correction: _____ 20%
Differential phase correction: _____ 10°
Differential gain correction: _____ 15%

## 2.4. Technical description:

The video signal input, pass through the emitter follower Q1, isolating the entrance impedance from the rest of the circuit.

Following, the video signal will be controlled by the AGC circuit. The input video signal can vary from 0,5 to 1,5 Vpp, but the output video will remain at 0,9~1,05 Vpp. IC2 has an output that is proportional to the synchronism pulse level which will be amplified by IC3:B and control IC1 gain. IC2 is also responsible for the sync-pulse generator. The sync-pulse signal will be inverted by Q2 and supply Q3 transistor's gate in order to clamp the video signal via L1.

IC6:A will amplify the video signal and at its output is the transistor Q4. At Q4 transistor's emitter is the circuit responsible for the differential gain control, differential phase control and the sync-pulse expanding.

The processed video will be amplified by IC6:B, and supply the main output (75 ohm impedance) and the video monitor output at the front panel.

## 2.5. Adjust procedure:

1. Place the AGC and DC RESTORE jumper's to the ON position;
2. Adjust R17 for a voltage level of 3,0~3,2 V at pin14 of the IC4;
3. Monitor TP1 and adjust R15 for a minimum variation of 0,9~1,05 Vpp with a input video signal varying from 0,5 to 1,5 Vpp;
4. Adjust R30 and R33 for a video signal of 650mVpp and pedestal of 0V at TP3;
5. Input a video signal of 0,5Vpp and adjust R66 until **Low** Video Level LED lights on. It will indicate if your input video signal is too low;
6. Input a video signal of 1,5Vpp and adjust R65 until **High** Video Level LED lights on. It will indicate if your input video signal is too high;
7. Adjust R39 and R43 to control the video output level and pedestal, respectively;
8. Place the ADJUST jumper to the ON position and monitor TP4. The following table describes what each component is responsible for:
   Synchronism Pulse Expander: R62.
   Differential Gain Control: R45, R46, R49, R51, R54, R56, R58, R60, R62.

Differential Phase Control: C34, C38, C40, C42, C44

## 2.6. Circuit Diagram PCV004:

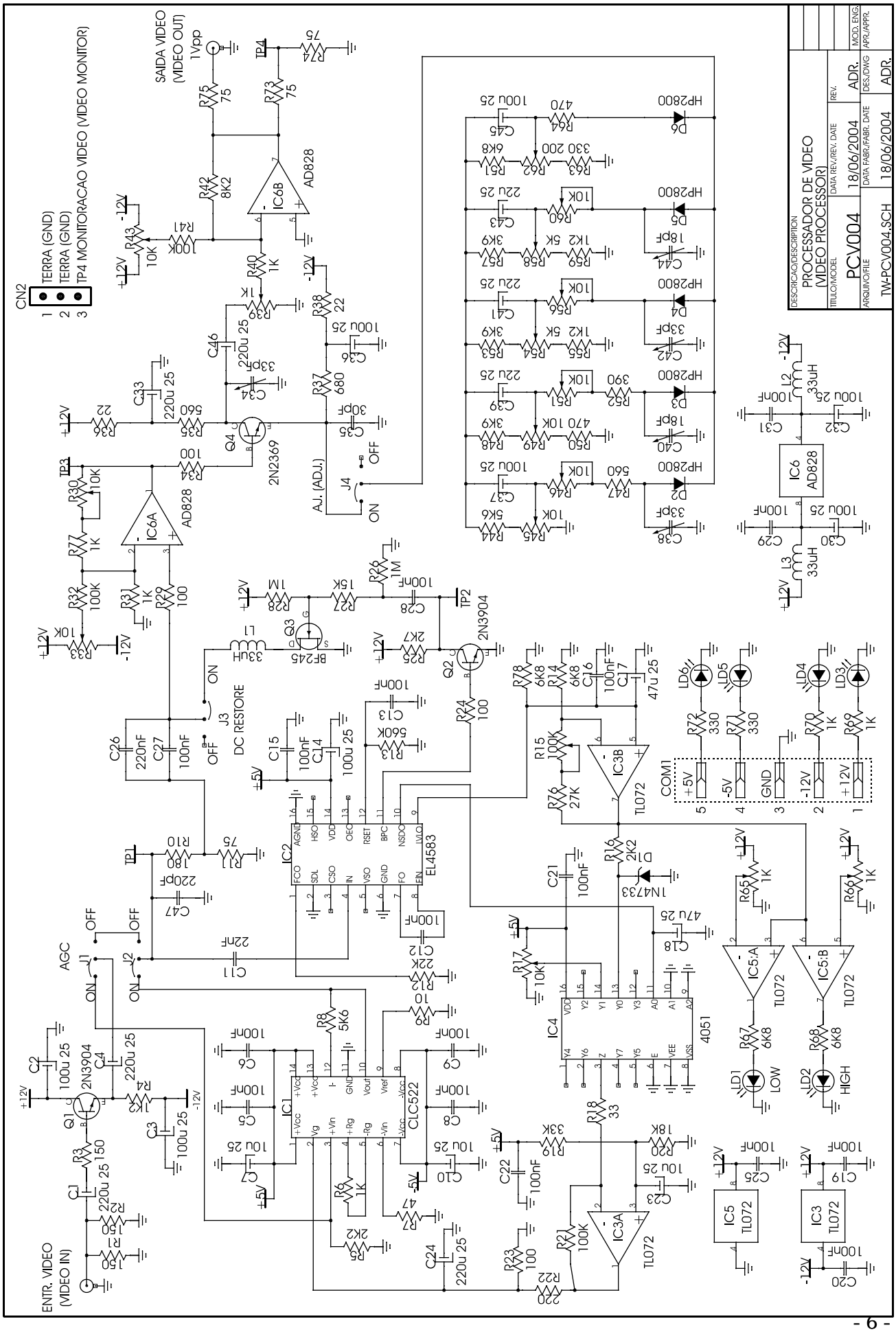

## 2.7. Layout PCV004:

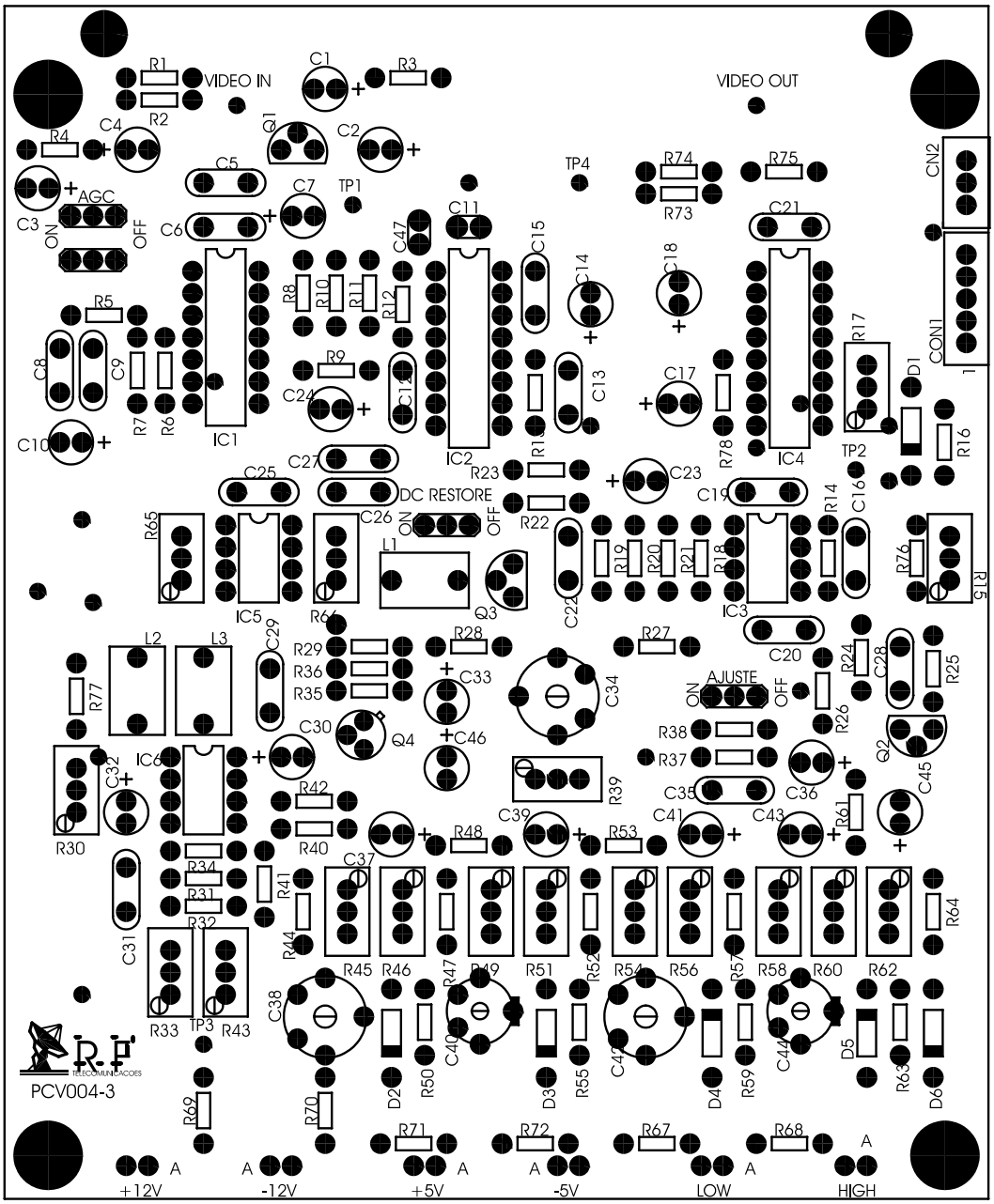

## 2.8. Parts List PCV004:

| Quant. | Description | Position | Code |
|---|---|---|---|
| 3 | INDUCTOR 30 µH | L1,L2,L3 | 50001 |
| 2 | INTEGRATED CIRCUIT TL072 CDP | IC3,IC5 | 60066 |
| 1 | INTEGRATED CIRCUIT CD 4051 | IC4 | 60079 |
| 1 | INTEGRATED CIRCUIT AD828 | IC6 | 60157 |
| 1 | INTEGRATED CIRCUIT CLC 522 | IC1 | 60158 |
| 1 | INTEGRATED CIRCUIT EL 4583 C | IC2 | 60159 |
| 8 | CAPACITOR ELCO. RADIAL 100µF 25V | C2,C3,C14,C30,C36,C37,C45 C30,C33 | 74010 |
| 5 | CAPACITOR ELCO. RADIAL 220µF 25V | C1,C4,C12,C24,C29,C33,C46 | 74013 |
| 3 | CAPACITOR ELCO. RADIAL 22µF 25V | C39,C41,C43 | 74014 |
| 3 | CAPACITOR ELCO. RADIAL 10µF 25V | C7,C10,C23 | 74028 |
| 2 | CAPACITOR ELCO. RADIAL 47µF 25V | C17,C18 | 74029 |
| 17 | CAPACITOR POL. METAL. 100ηF | C5,C6,C8,C9,C12,C13,C15,C16,C19,C20, C21,C22,C25,C27,C28,C29,C31 | 75019 |
| 1 | CAPACITOR CER.MULTI LAYER. 22ηF | C11 | 76045 |
| 1 | CAPACITOR MICA CMO 33ρF 100V | C35 | 79914 |
| 1 | CAPACITOR MICA CMO 120ρF | C47 | 79943 |
| 1 | DIODE 1N 4733 A 5,1V | D1 | 82018 |
| 2 | CAPACITOR TRIMMER 2/22ρF | C40,C44 | 85002 |
| 3 | CAPACITOR TRIMMER 5,5/65ρF | C34,C38,C42 | 85003 |
| 1 | TRIMPOT 3296W-1-104 100K | R15 | 90025 |
| 1 | TRIMPOT 3296W-1-201 200 Ohms | R62 | 90026 |
| 10 | TRIMPOT 3296W-1-103 10 K | R17,R30,R33,R43,R45,R46,R49,R51,R56, R60 | 90027 |
| 3 | TRIMPOT 3296W-1-102 1 K | R39,R65,R66 | 90028 |
| 2 | TRIMPOT 3296W-1-502 5 K | R54,R58 | 90029 |
| 1 | RESISTOR 1/8W 10 Ohms | R9 | 100008 |
| 2 | RESISTOR 1/8W 22 Ohms | R36,R38 | 100010 |
| 1 | RESISTOR 1/8W 47 Ohms | R7 | 100013 |
| 4 | RESISTOR 1/8W 75 Ohms | R11,R73,R74,R75 | 100016 |
| 4 | RESISTOR 1/8W 100 Ohms | R23,R24,R29,R34 | 100017 |
| 3 | RESISTOR 1/8W 150 Ohms | R1,R2,R3 | 100019 |
| 1 | RESISTOR 1/8W 180 Ohms | R10 | 100020 |
| 1 | RESISTOR 1/8W 220 Ohms | R22 | 100021 |
| 3 | RESISTOR 1/8W 330 Ohms | R63,R71,R72 | 100023 |
| 1 | RESISTOR 1/8W 390 Ohms | R52 | 100024 |

| | | | |
|---|---|---|---|
| 2 | RESISTOR 1/8W 470 Ohms | R50,R64 | 100025 |
| 2 | RESISTOR 1/8W 560 Ohms | R35,R47 | 100026 |
| 3 | RESISTOR 1/8W 680 Ohms | R37,R67,R69 | 100027 |
| 6 | RESISTOR 1/8W 1 K | R6,R31,R40,R69,R70,R77 | 100028 |
| 3 | RESISTOR 1/8W 1 K 2 | R4,R55,R59 | 100029 |
| 2 | RESISTOR 1/8W 2 K 2 | R5,R16 | 100032 |
| 1 | RESISTOR 1/8W 2 K 7 | R25 | 100033 |
| 3 | RESISTOR 1/8W 3 K 9 | R48,R53,R57 | 100036 |
| 1 | RESISTOR 1/8W 4 K 7 | R61,R62 | 100037 |
| 2 | RESISTOR 1/8W 5 K 6 | R8,R44 | 100038 |
| 2 | RESISTOR 1/8W 6 K 8 | R14,R61 | 100039 |
| 1 | RESISTOR 1/8W 8 K 2 | R42 | 100040 |
| 1 | RESISTOR 1/8W 15 K | R27 | 100043 |
| 1 | RESISTOR 1/8W 18 K | R20 | 100044 |
| 1 | RESISTOR 1/8W 22 K | R12 | 100045 |
| 1 | RESISTOR 1/8W 27 K | R76 | 100046 |
| 1 | RESISTOR 1/8W 33 K | R18 | 100047 |
| 3 | RESISTOR 1/8W 100 K | R21,R32,R41 | 100051 |
| 1 | RESISTOR 1/8W 560 K | R13 | 100054 |
| 2 | RESISTOR 1/8W 1 M | R26,R28 | 100059 |
| 1 | TRANSISTOR 2N 2369 A | Q4 | 120022 |
| 2 | TRANSISTOR 2N 3904 | Q1,Q2 | 127012 |
| 1 | TRANSISTOR BF 245 C | Q3 | 128012 |
| 1 | CONNECTOR BURDY MMP-5S1 | CON1 | 800818 |
| 1 | CONNECTOR IC 2 VIAS | CON2 | 801914 |
| 5 | DIODE HP 2800 | D1,D2,D4,D5,D6 | IMPD00001 |
| 1 | PCB VIDEO PROCESSOR | PCB1 | PCIPCV004 |

# 6. Power Supply:

## 6.1. Function:

The power supply function is to generate +12V, -12V, +5V and –5V voltage suitable to supply the modulator.

## 6.2. Technical description:

The transformer T1 reduces the input voltage for the rectifiers D1 to D4. The positive and negative voltage obtained after the rectification and filtering through are regulated through IC1, IC2, IC3 and IC4 to obtain +12V, -12V, +5V and -5V voltage to supply the vídeo processor.

## 6.3. Circuit Diagram FTE029:

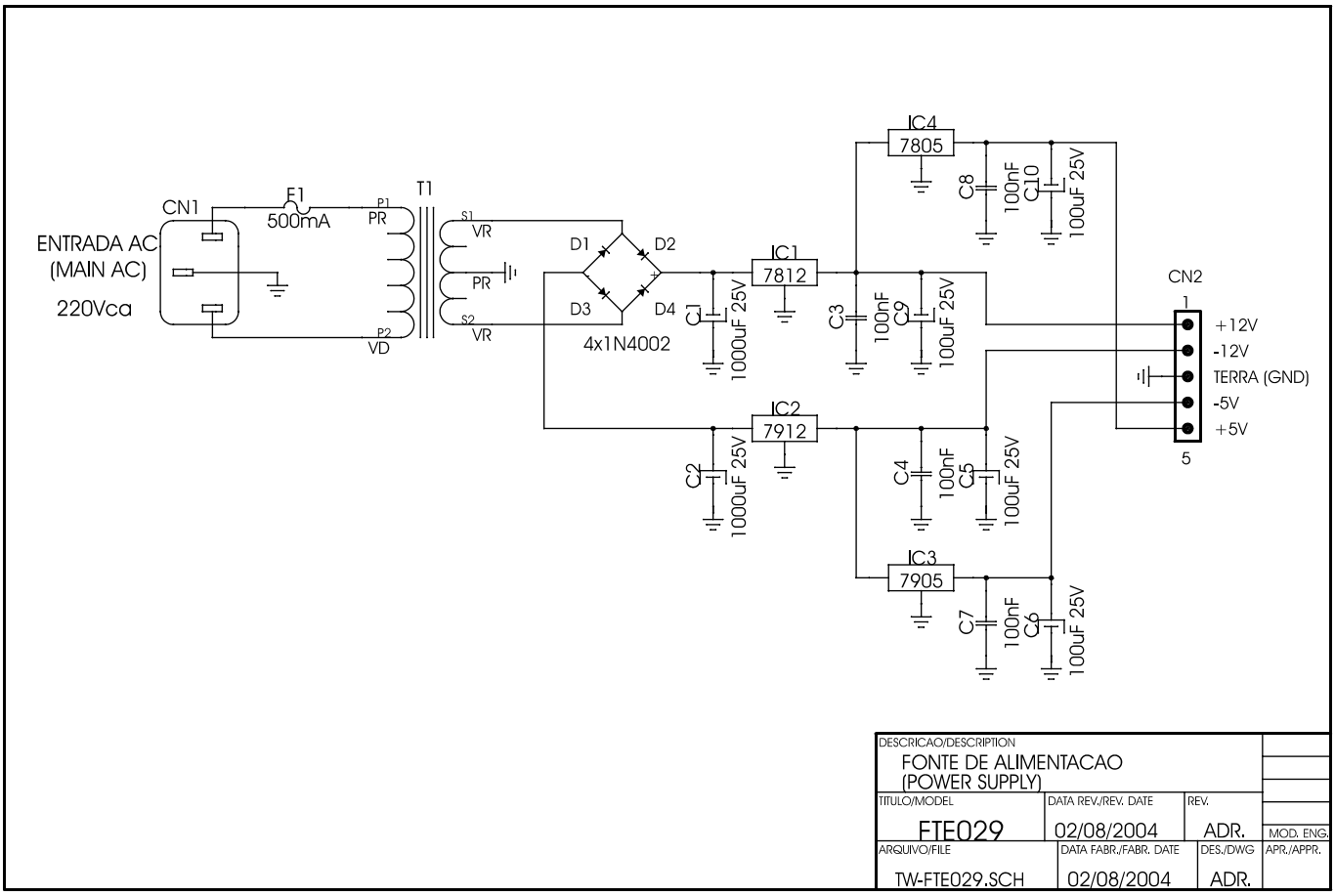

## 6.4. Layout FTE029:

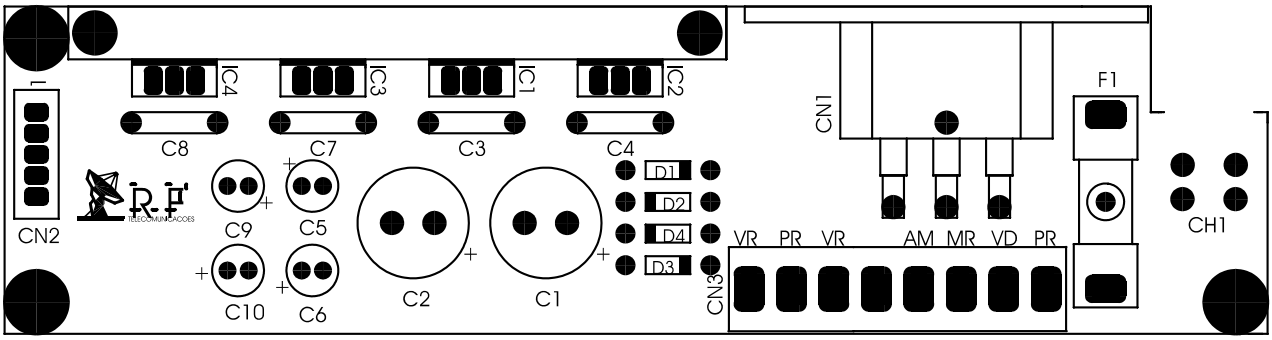


## 6.5. Parts List FTE029:

| Quant. | Description | Position | Code |
|---|---|---|---|
| 1 | VOLTAGE REGULATOR 7905 | IC3 | 60015 |
| 4 | CAPACITOR ELCO. RADIAL 100µF 25V | C5,C6,C6,C10 | 74010 |
| 2 | CAPACITOR ELCO. RADIAL 1000µF 25V | C1,C2 | 74021 |
| 4 | CAPACITOR POL. METAL. 100nF | C3,C4,C7,C8 | 75004 |
| 4 | DIODE 1N 4002 | D1,D2,D3,D4 | 82001 |
| 1 | FUSE PEQUENO 500mA | F1 | 86018 |
| 1 | VOLTAGE REGULATOR 7912 | IC2 | 126006 |
| 1 | VOLTAGE REGULATOR 7805 | IC4 | 126007 |
| 1 | VOLTAGE REGULATOR 7812 | IC1 | 126019 |
| 1 | CONNECTOR AC MALE R332 | CN1 | 800208 |
| 1 | CONNECTOR MUL. MALE 5P BURDY | CN2 | 800818 |
| 1 | CONNECTOR BORNE KRE-8 | CN3 | 800212 |
| 1 | PCB POWER SUPPLY | PCB1 | PCIFTE029 |
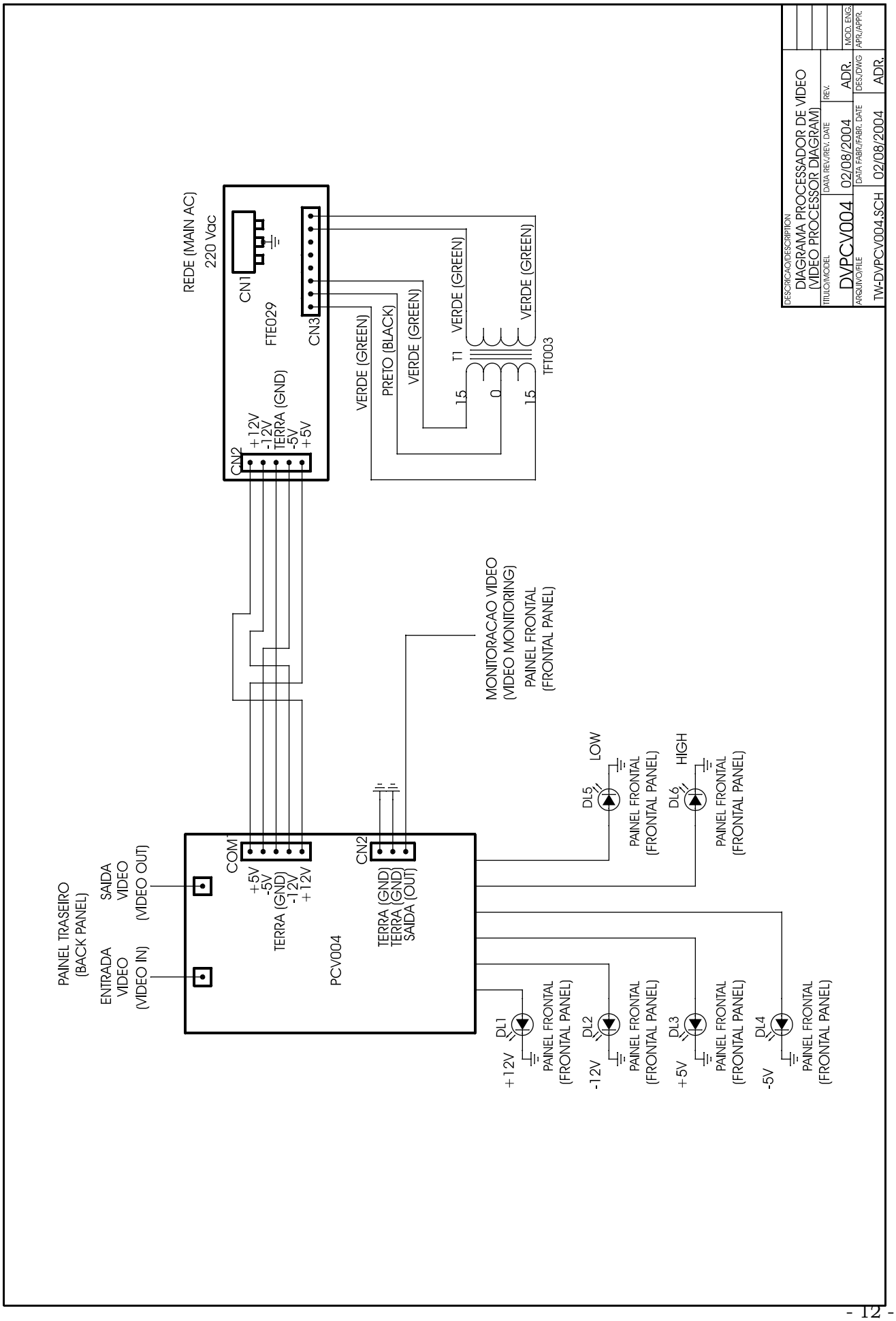
## 7. Video Processor Circuit Diagram: