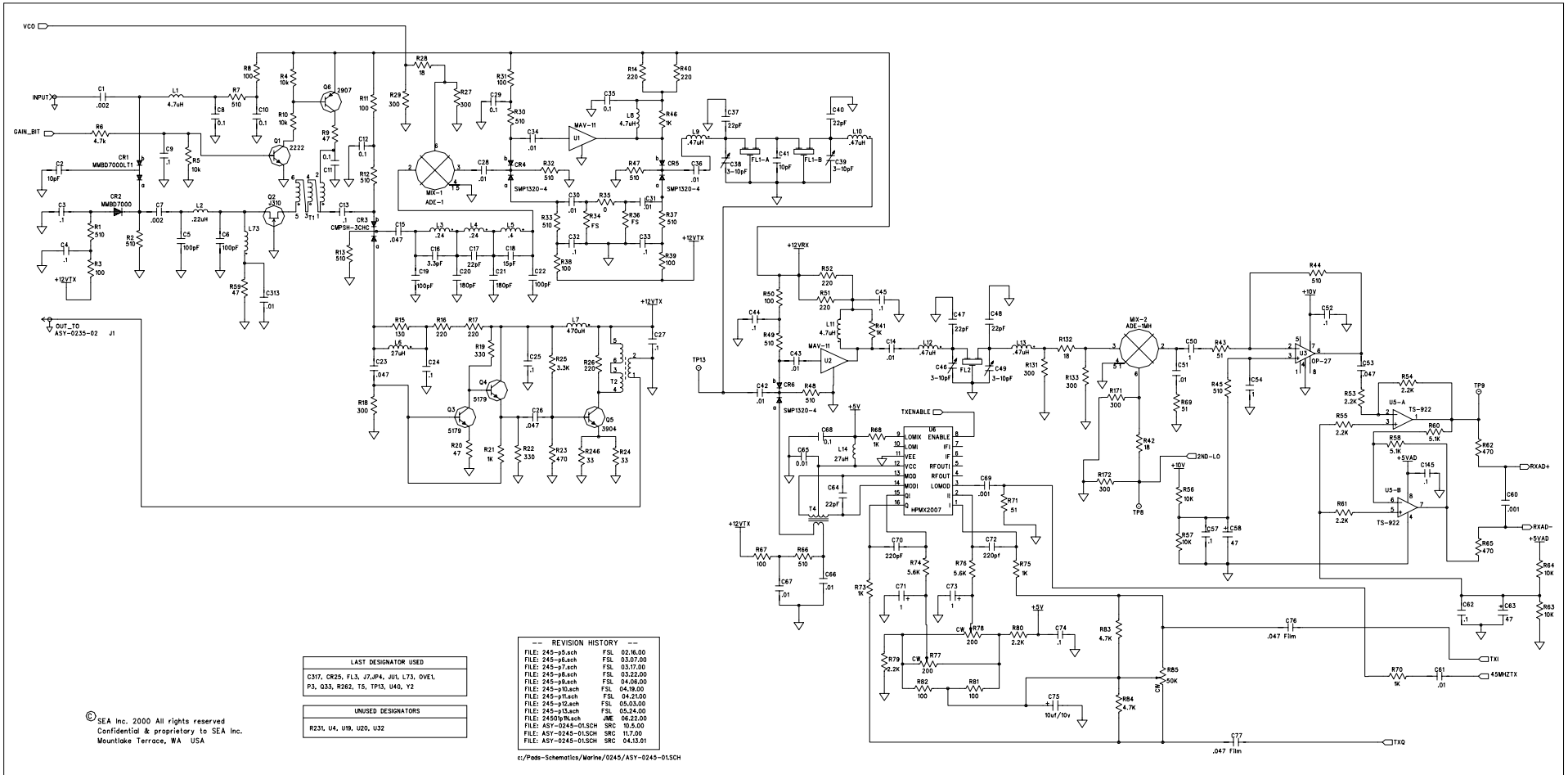

LAST DESIGNATOR USED
C317, CR25, FL3, J7,JP4, JU1, L73, OVE1, P3, Q33, R262, T5, TP13, U40, Y2

UNUSED DESIGNATORS
R231, U4, U19, U20, U32

©SEA Inc. 2000 All rights reserved
Confidential & proprietary to SEA Inc.
Mountlake Terrace, WA USA

-- REVISION HISTORY --

FILE: 245-p5.sch	FSL	02.16.00
FILE: 245-p6.sch	FSL	03.07.00
FILE: 245-p7.sch	FSL	03.17.00
FILE: 245-p8.sch	FSL	03.22.00
FILE: 245-p9.sch	FSL	04.06.00
FILE: 245-p10.sch	FSL	04.19.00
FILE: 245-p11.sch	FSL	04.21.00
FILE: 245-p12.sch	FSL	05.03.00
FILE: 245-p13.sch	FSL	05.24.00
FILE: 24501p1N.sch	JME	06.22.00
FILE: ASY-0245-01.SCH	SRC	10.5.00
FILE: ASY-0245-01.SCH	SRC	11.7.00
FILE: ASY-0245-01.SCH	SRC	04.13.01

c:/Pads-Schematics/Marine/0245/ASY-0245-01.SCH

NOTES: (UNLESS OTHERWISE SPECIFIED)
1. CAPACITORS ARE IN MICROFARADS (uf)
2. RESISTORS ARE IN OHMS, 1/8W, 5%

LEGEND
INDICATES CONNECTION ON ANOTHER SHEET

ASY-0245-01
MAINBOARD SCHEMATIC
MAIN RECEIVER / TRANSMITTER
SHEET 1 OF 4

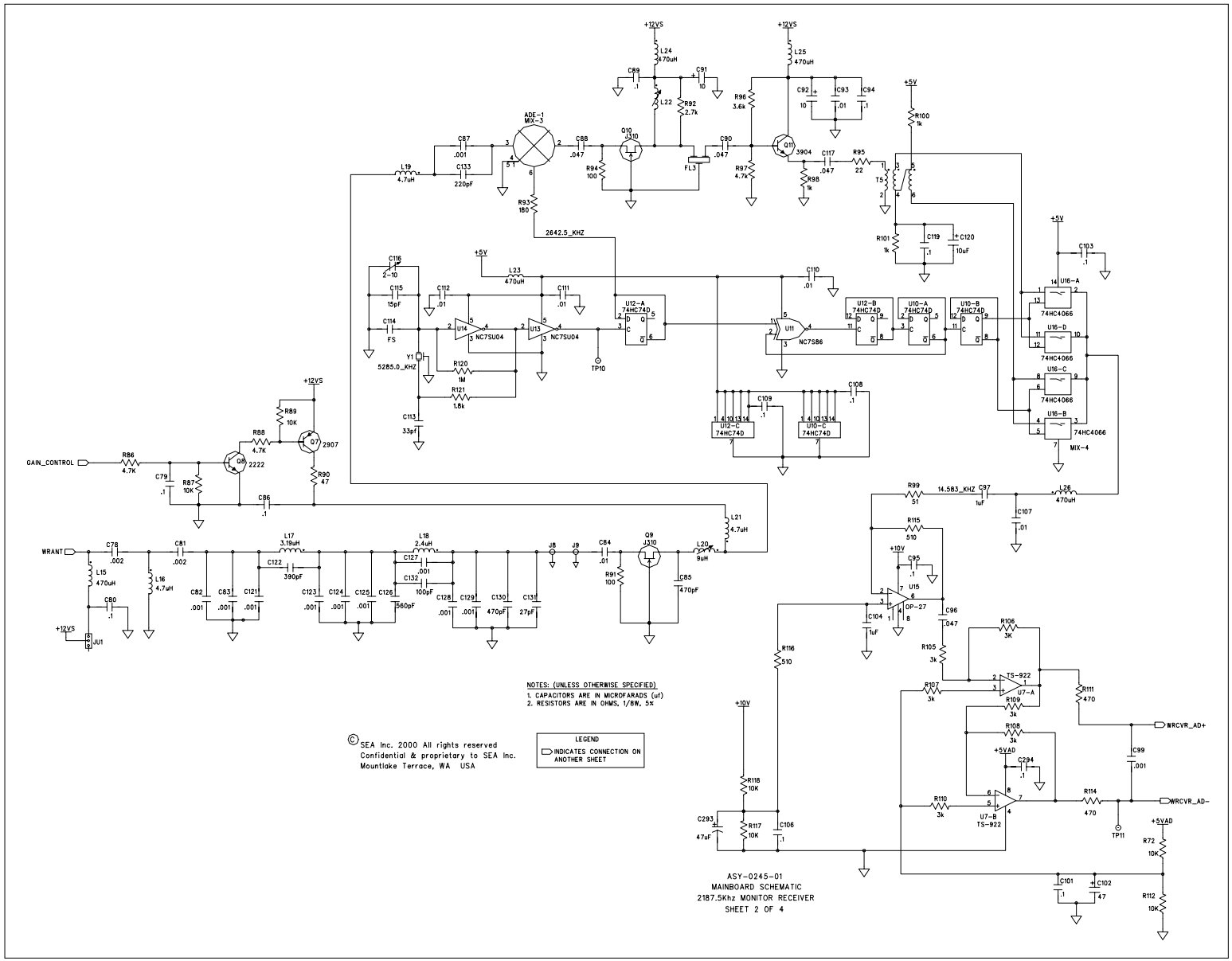

NOTES: (UNLESS OTHERWISE SPECIFIED)
1. CAPACITORS ARE IN MICROFARADS (uf)
2. RESISTORS ARE IN OHMS, 1/8W, 5%

© SEA Inc. 2000 All rights reserved
Confidential & proprietary to SEA Inc.
Mountlake Terrace, WA USA

LEGEND
INDICATES CONNECTION ON ANOTHER SHEET

ASY-0245-01
MAINBOARD SCHEMATIC
2187.5Khz MONITOR RECEIVER
SHEET 2 OF 4

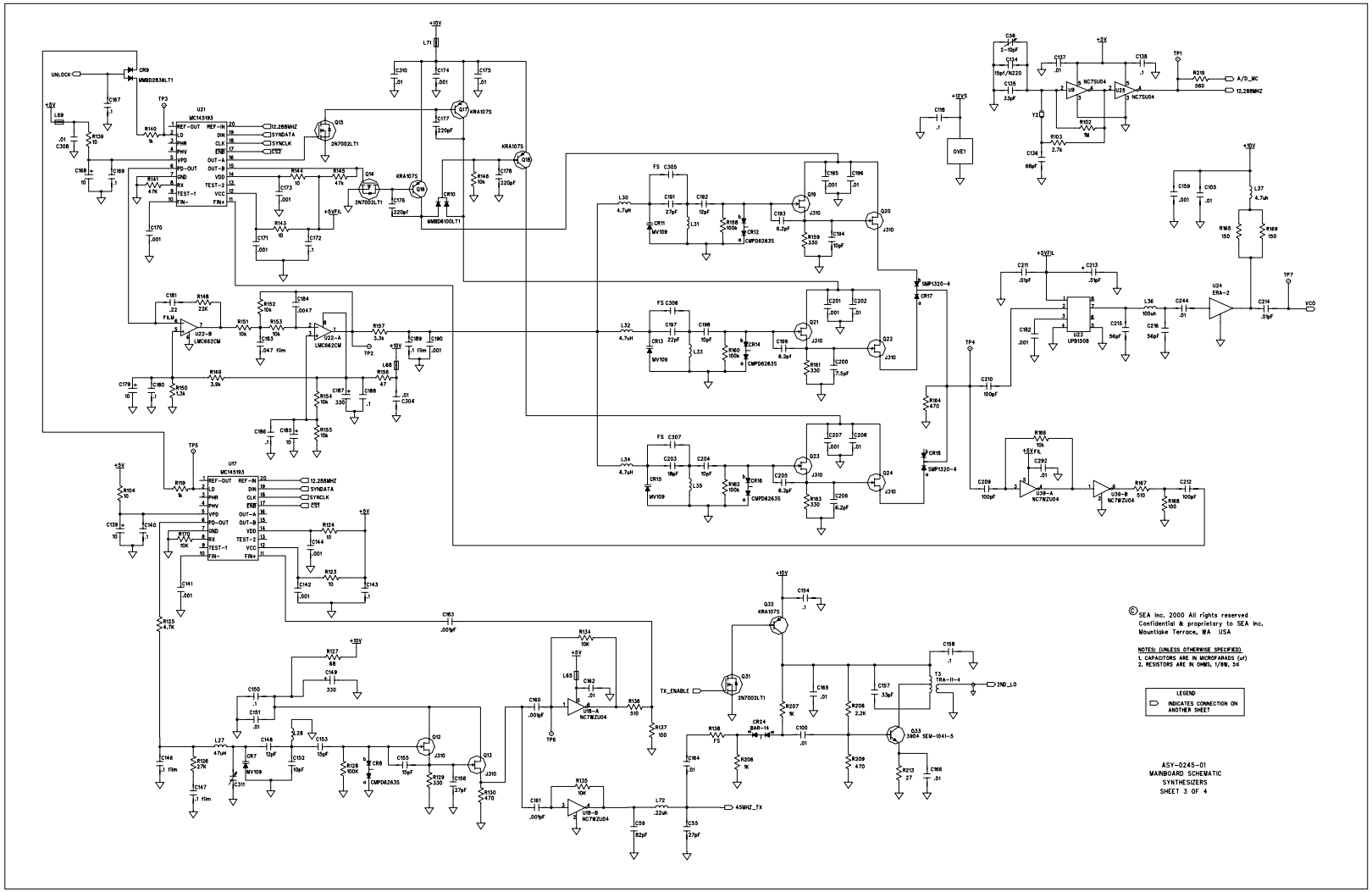

© SEA Inc. 2000 All rights reserved
Confidential & proprietary to SEA Inc.
Mountlake Terrace, WA USA

NOTES: (UNLESS OTHERWISE SPECIFIED)
1. CAPACITORS ARE IN MICROFARADS (uf)
2. RESISTORS ARE IN OHMS, 1/8W, 5%

LEGEND
INDICATES CONNECTION ON ANOTHER SHEET

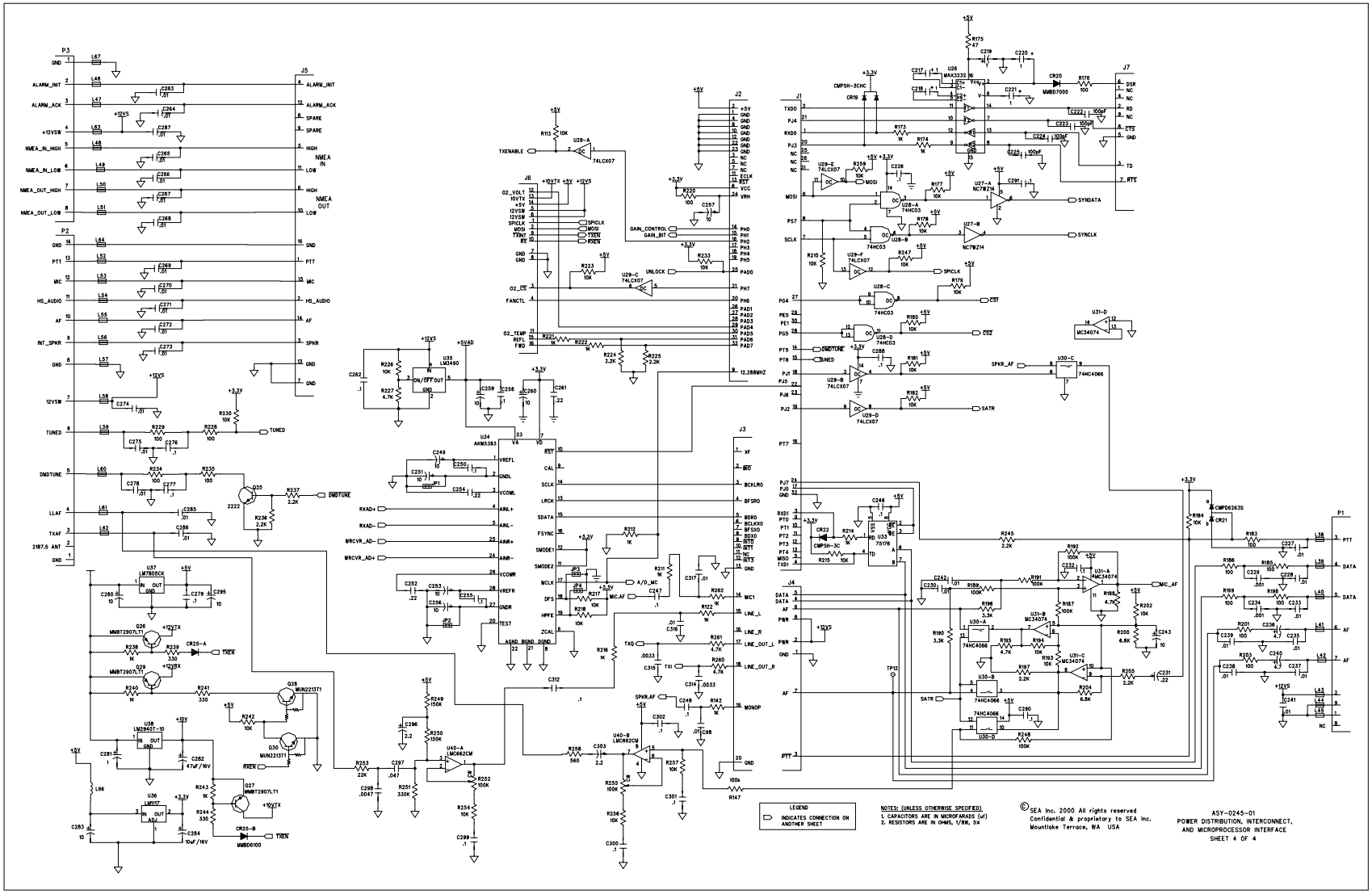
P3
P2
J5
J6
J2
J1
J7
J3
J4
P1
U34 AKM5383
U35 LM3490
U36 LM317
U37 LM78M05CK
U38 LM2940T-10
U40-A LMC662CM
U40-B LMC662CM
U26 MAX3232
U30-A 74HC4066
U30-B 74HC4066
U30-C 74HC4066
U30-D 74HC4066
U31-A MC34074
U31-B MC34074
U31-C MC34074
U31-D MC34074
U33 75176
U27-A NC7WZ34
U27-B NC7WZ14
U28-A 74HC03
U28-B 74HC03
U28-C 74HC03
U28-D 74HC03
U29-A 74LCX07
U29-B 74LCX07
U29-C 74LCX07
U29-D 74LCX07
U29-E 74LCX07
U29-F 74LCX07
U29-G 74LCX07
U31-D MC34074
Q25 2222
Q26 MMBT2907LT1
Q27 MMBT2907LT1
Q28 MUN2213T1
Q29 MMBT2907LT1
Q30 MUN2213T1
CR20 MMBD7000
CR21 CMPD6263S
CR22 CMPSH-3C
CR19 CMPSH-3CHC
CR25-A
CR25-B MMBD6100
LEGEND
INDICATES CONNECTION ON ANOTHER SHEET
NOTES: (UNLESS OTHERWISE SPECIFIED)
1. CAPACITORS ARE IN MICROFARADS (uf)
2. RESISTORS ARE IN OHMS, 1/8W, 5%
© SEA Inc. 2000 All rights reserved
Confidential & proprietary to SEA Inc.
Mountlake Terrace, WA USA
ASY-0245-01
POWER DISTRIBUTION, INTERCONNECT,
AND MICROPROCESSOR INTERFACE
SHEET 4 OF 4