FCC SAR Test Report

Report No.	:	**SA171110C21**
Applicant	:	**Microsoft Corporation**
Address	:	**One Microsoft Way, Redmond, WA 98052-6399 USA**
Product	:	**Portable Computing Device**
FCC ID	:	**C3K1824**
Brand	:	**Microsoft**
Model No.	:	**1824**
Standards	:	**FCC 47 CFR Part 2 (2.1093), IEEE C95.1:1992, IEEE Std 1528:2013** **KDB 865664 D01 v01r04, KDB 865664 D02 v01r02** **KDB 248227 D01 v02r02, KDB 447498 D01 v06, KDB 616217 D04 v01r02**
Sample Received Date	:	**Nov. 13, 2017**
Date of Testing	:	**Mar. 02, 2018 ~ Jun. 27, 2018**
Lab Address	:	**No. 47-2, 14th Ling, Chia Pau Vil., Lin Kou Dist., New Taipei City, Taiwan, R.O.C.**
Test Location	:	**No. 19, Hwa Ya 2nd Rd, Wen Hwa Vil, Kwei Shan Dist., Taoyuan City 33383, Taiwan (R.O.C)**

CERTIFICATION: The above equipment have been tested by **Bureau Veritas Consumer Products Services (H.K.) Ltd., Taoyuan Branch – Lin Kou Laboratories**, and found compliance with the requirement of the above standards. The test record, data evaluation & Equipment Under Test (EUT) configurations represented herein are true and accurate accounts of the measurements of the sample's SAR characteristics under the conditions specified in this report. It should not be reproduced except in full, without the written approval of our laboratory. The client should not use it to claim product certification, approval, or endorsement by TAF or any government agencies.

Prepared By : Vera Huang

Vera Huang / Specialist

Approved By : Eli Hsu

Eli Hsu / Senior Engineer

This report is for your exclusive use. Any copying or replication of this report to or for any other person or entity, or use of our name or trademark, is permitted only with our prior written permission. This report sets forth our findings solely with respect to the test samples identified herein. The results set forth in this report are not indicative or representative of the quality or characteristics of the lot from which a test sample was taken or any similar or identical product unless specifically and expressly noted. Our report includes all of the tests requested by you and the results thereof based upon the information that you provided to us. You have 60 days from date of issuance of this report to notify us of any material error or omission caused by our negligence, provided, however, that such notice shall be in writing and shall specifically address the issue you wish to raise. A failure to raise such issue within the prescribed time shall constitute your unqualified acceptance of the completeness of this report, the tests conducted and the correctness of the report contents. Unless specific mention, the uncertainty of measurement has been explicitly taken into account to declare the compliance or non-compliance to the specification.

Table of Contents

Release Control Record **3**
1. Summary of Maximum SAR Value **4**
2. Description of Equipment Under Test **5**
3. SAR Measurement System **6**
3.1 Definition of Specific Absorption Rate (SAR) 6
3.2 SPEAG DASY52 System 6
3.2.1 Robot 7
3.2.2 Probes 8
3.2.3 Data Acquisition Electronics (DAE) 9
3.2.4 Phantoms 9
3.2.5 Device Holder 10
3.2.6 System Validation Dipoles 10
3.2.7 Tissue Simulating Liquids 11
3.3 SAR System Verification 14
3.4 SAR Measurement Procedure 15
3.4.1 Area & Zoom Scan Procedure 15
3.4.2 Volume Scan Procedure 15
3.4.3 Power Drift Monitoring 16
3.4.4 Spatial Peak SAR Evaluation 16
3.4.5 SAR Averaged Methods 16
4. SAR Measurement Evaluation **17**
4.1 EUT Configuration and Setting 17
4.2 EUT Testing Position 19
4.2.1 SAR Test Exclusion Evaluations 19
4.3 Tissue Verification 20
4.4 System Validation 20
4.5 System Verification 21
4.6 Maximum Output Power 22
4.6.1 Maximum Target Conducted Power 22
4.6.2 Measured Conducted Power Result 24
4.7 SAR Testing Results 26
4.7.1 SAR Test Reduction Considerations 26
4.7.2 SAR Results for Body Exposure Condition (Test Separation Distance is 0 mm) 27
4.7.3 SAR Measurement Variability 29
4.7.4 Simultaneous Multi-band Transmission Evaluation 30
5. Calibration of Test Equipment **31**
6. Measurement Uncertainty **32**
7. Information on the Testing Laboratories **34**

Appendix A. SAR Plots of System Verification
Appendix B. SAR Plots of SAR Measurement
Appendix C. Calibration Certificate for Probe and Dipole
Appendix D. Photographs of EUT and Setup

Release Control Record

Report No.	Reason for Change	Date Issued
SA171110C21	Initial release	Jun. 28, 2018

1. Summary of Maximum SAR Value

Equipment Class	Mode	Highest SAR-1g Body Tested at 0 mm (W/kg)
DTS	2.4G WLAN	0.72
NII	5.3G WLAN	0.69
	5.6G WLAN	1.26
	5.8G WLAN	1.31
DSS	Bluetooth	0.17

Note:

1. The SAR criteria **(Head & Body: SAR-1g 1.6 W/kg, and Extremity: SAR-10g 4.0 W/kg)** for general population / uncontrolled exposure is specified in FCC 47 CFR part 2 (2.1093) and ANSI/IEEE C95.1-1992.

2. Description of Equipment Under Test

EUT Type	Portable Computing Device
FCC ID	C3K1824
Brand Name	Microsoft
Model Name	1824
Tx Frequency Bands (Unit: MHz)	WLAN : 2412 ~ 2472, 5180 ~ 5240, 5260 ~ 5320, 5500 ~ 5700, 5745 ~ 5825 Bluetooth : 2402 ~ 2480
Uplink Modulations	802.11b : DSSS 802.11a/g/n/ac : OFDM Bluetooth : GFSK, π/4-DQPSK, 8-DPSK
Maximum Tune-up Conducted Power (Unit: dBm)	Please refer to section 4.6.1 of this report
Antenna Type	Loop Antenna
EUT Stage	Engineering Sample

Note:

2. The above EUT information is declared by manufacturer and for more detailed features description please refers to the manufacturer's specifications or User's Manual.

3. SAR Measurement System

3.1 Definition of Specific Absorption Rate (SAR)

SAR is related to the rate at which energy is absorbed per unit mass in an object exposed to a radio field. The SAR distribution in a biological body is complicated and is usually carried out by experimental techniques or numerical modeling. The standard recommends limits for two tiers of groups, occupational/controlled and general population/uncontrolled, based on a person's awareness and ability to exercise control over his or her exposure. In general, occupational/controlled exposure limits are higher than the limits for general population/uncontrolled.

The SAR definition is the time derivative (rate) of the incremental energy (dW) absorbed by (dissipated in) an incremental mass (dm) contained in a volume element (dv) of a given density (ρ). The equation description is as below:

$$\mathbf{SAR} = \frac{\mathbf{d}}{\mathbf{dt}}\left(\frac{\mathbf{dW}}{\mathbf{dm}}\right) = \frac{\mathbf{d}}{\mathbf{dt}}\left(\frac{\mathbf{dW}}{\boldsymbol{\rho}\mathbf{dv}}\right)$$

SAR is expressed in units of Watts per kilogram (W/kg)

SAR measurement can be related to the electrical field in the tissue by

$$\mathbf{SAR} = \frac{\boldsymbol{\sigma}|\mathbf{E}|^2}{\boldsymbol{\rho}}$$

Where: σ is the conductivity of the tissue, ρ is the mass density of the tissue and E is the RMS electrical field strength.

3.2 SPEAG DASY52 System

DASY52 system consists of high precision robot, probe alignment sensor, phantom, robot controller, controlled measurement server and near-field probe. The robot includes six axes that can move to the precision position of the DASY52 software defined. The DASY52 software can define the area that is detected by the probe. The robot is connected to controlled box. Controlled measurement server is connected to the controlled robot box. The DAE includes amplifier, signal multiplexing, AD converter, offset measurement and surface detection. It is connected to the Electro-optical coupler (ECO). The ECO performs the conversion form the optical into digital electric signal of the DAE and transfers data to the PC.

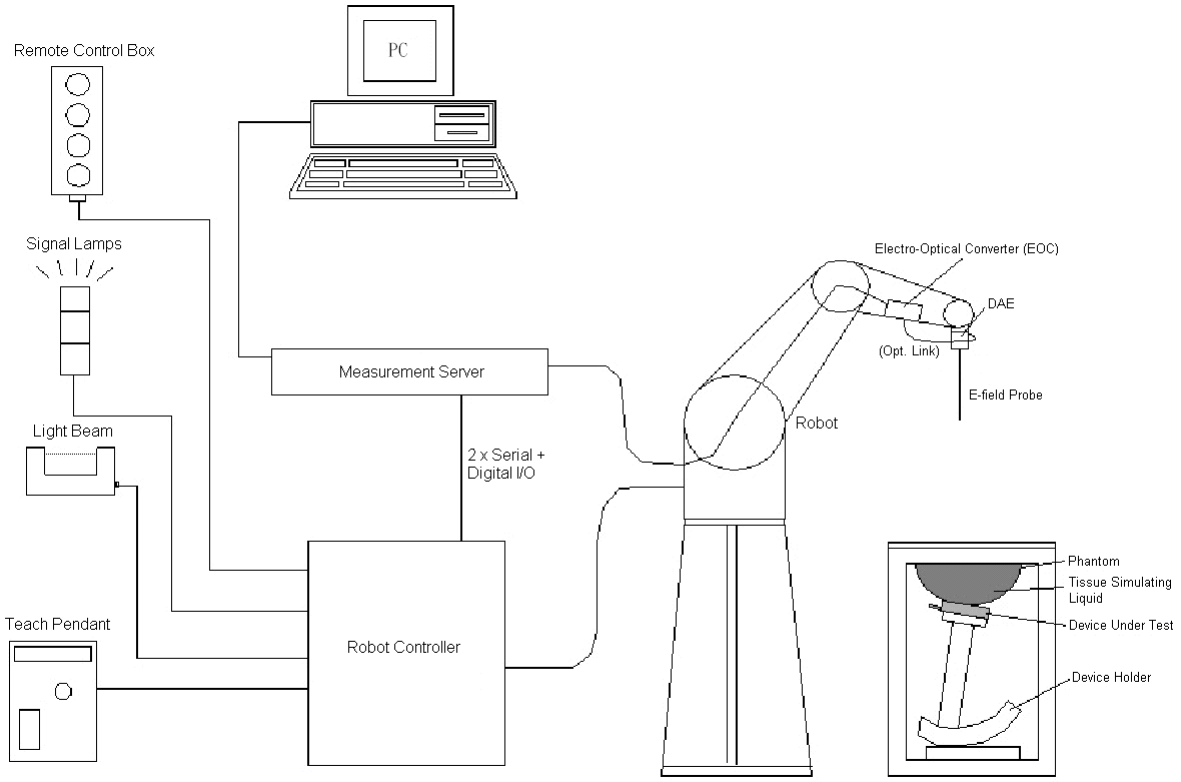

Fig-3.1 SPEAG DASY52 System Setup

3.2.1 Robot

The DASY52 system uses the high precision robots from Stäubli SA (France). For the 6-axis controller system, the robot controller version of CS8c from Stäubli is used. The Stäubli robot series have many features that are important for our application:

- High precision (repeatability ±0.035 mm)
- High reliability (industrial design)
- Jerk-free straight movements
- Low ELF interference (the closed metallic construction shields against motor control fields)

Fig-3.2 SPEAG DASY52 System

3.2.2 Probes

The SAR measurement is conducted with the dosimetric probe. The probe is specially designed and calibrated for use in liquid with high permittivity. The dosimetric probe has special calibration in liquid at different frequency.

Model	EX3DV4	
Construction	Symmetrical design with triangular core. Built-in shielding against static charges. PEEK enclosure material (resistant to organic solvents, e.g., DGBE).	
Frequency	10 MHz to 6 GHz Linearity: ± 0.2 dB	
Directivity	± 0.3 dB in HSL (rotation around probe axis) ± 0.5 dB in tissue material (rotation normal to probe axis)	
Dynamic Range	10 µW/g to 100 mW/g Linearity: ± 0.2 dB (noise: typically < 1 µW/g)	
Dimensions	Overall length: 337 mm (Tip: 20 mm) Tip diameter: 2.5 mm (Body: 12 mm) Typical distance from probe tip to dipole centers: 1 mm	

Model	ES3DV3	
Construction	Symmetrical design with triangular core. Interleaved sensors. Built-in shielding against static charges. PEEK enclosure material (resistant to organic solvents, e.g., DGBE).	
Frequency	10 MHz to 4 GHz Linearity: ± 0.2 dB	
Directivity	± 0.2 dB in HSL (rotation around probe axis) ± 0.3 dB in tissue material (rotation normal to probe axis)	
Dynamic Range	3. µW/g to 100 mW/g Linearity: ± 0.2 dB	
Dimensions	Overall length: 337 mm (Tip: 20 mm) Tip diameter: 3.9 mm (Body: 12 mm) Distance from probe tip to dipole centers: 2.0 mm	

Model	ET3DV6	
Construction	Symmetrical design with triangular core Built-in optical fiber for surface detection system. Built-in shielding against static charges. PEEK enclosure material (resistant to organic solvents, e.g., DGBE)	
Frequency	10 MHz to 2.3 GHz; Linearity: ± 0.2 dB	
Directivity	± 0.2 dB in TSL (rotation around probe axis) ± 0.4 dB in TSL (rotation normal to probe axis)	
Dynamic Range	5 µW/g to 100 mW/g; Linearity: ± 0.2 dB	
Dimensions	Overall length: 337 mm (Tip: 16 mm) Tip diameter: 6.8 mm (Body: 12 mm) Distance from probe tip to dipole centers: 2.7 mm	

3.2.3 Data Acquisition Electronics (DAE)

Model	DAE3, DAE4	
Construction	Signal amplifier, multiplexer, A/D converter and control logic. Serial optical link for communication with DASY embedded system (fully remote controlled). Two step probe touch detector for mechanical surface detection and emergency robot stop.	
Measurement Range	-100 to +300 mV (16 bit resolution and two range settings: 4mV, 400mV)	
Input Offset Voltage	< 5µV (with auto zero)	
Input Bias Current	< 50 fA	
Dimensions	60 x 60 x 68 mm	

3.2.4 Phantoms

Model	Twin SAM	
Construction	The shell corresponds to the specifications of the Specific Anthropomorphic Mannequin (SAM) phantom defined in IEEE 1528 and IEC 62209-1. It enables the dosimetric evaluation of left and right hand phone usage as well as body mounted usage at the flat phantom region. A cover prevents evaporation of the liquid. Reference markings on the phantom allow the complete setup of all predefined phantom positions and measurement grids by teaching three points with the robot.	
Material	Vinylester, glass fiber reinforced (VE-GF)	
Shell Thickness	2 ± 0.2 mm (6 ± 0.2 mm at ear point)	
Dimensions	Length: 1000 mm Width: 500 mm Height: adjustable feet	
Filling Volume	approx. 25 liters	

Model	ELI	
Construction	Phantom for compliance testing of handheld and body-mounted wireless devices in the frequency range of 30 MHz to 6 GHz. ELI is fully compatible with the IEC 62209-2 standard and all known tissue simulating liquids. ELI has been optimized regarding its performance and can be integrated into our standard phantom tables. A cover prevents evaporation of the liquid. Reference markings on the phantom allow installation of the complete setup, including all predefined phantom positions and measurement grids, by teaching three points. The phantom is compatible with all SPEAG dosimetric probes and dipoles.	
Material	Vinylester, glass fiber reinforced (VE-GF)	
Shell Thickness	2.0 ± 0.2 mm (bottom plate)	
Dimensions	Major axis: 600 mm Minor axis: 400 mm	
Filling Volume	approx. 30 liters	

3.2.5 Device Holder

Model	Mounting Device	
Construction	In combination with the Twin SAM Phantom or ELI4, the Mounting Device enables the rotation of the mounted transmitter device in spherical coordinates. Rotation point is the ear opening point. Transmitter devices can be easily and accurately positioned according to IEC, IEEE, FCC or other specifications. The device holder can be locked for positioning at different phantom sections (left head, right head, flat).	
Material	POM	

Model	Laptop Extensions Kit	
Construction	Simple but effective and easy-to-use extension for Mounting Device that facilitates the testing of larger devices according to IEC 62209-2 (e.g., laptops, cameras, etc.). It is lightweight and fits easily on the upper part of the Mounting Device in place of the phone 10ositioned.	
Material	POM, Acrylic glass, Foam	

3.2.6 System Validation Dipoles

Model	D-Serial	
Construction	Symmetrical dipole with l/4 balun. Enables measurement of feed point impedance with NWA. Matched for use near flat phantoms filled with tissue simulating solutions.	
Frequency	750 MHz to 5800 MHz	
Return Loss	> 20 dB	
Power Capability	> 100 W (f < 1GHz), > 40 W (f > 1GHz)	

3.2.7 Tissue Simulating Liquids

For SAR measurement of the field distribution inside the phantom, the phantom must be filled with homogeneous tissue simulating liquid to a depth of at least 15 cm. For head SAR testing, the liquid height from the ear reference point (ERP) of the phantom to the liquid top surface is larger than 15 cm. For body SAR testing, the liquid height from the center of the flat phantom to the liquid top surface is larger than 15 cm. The nominal dielectric values of the tissue simulating liquids in the phantom and the tolerance of 5% are listed in Table-3.1.

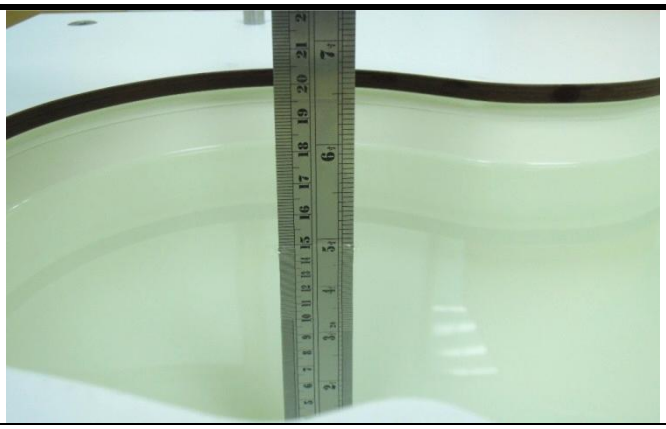	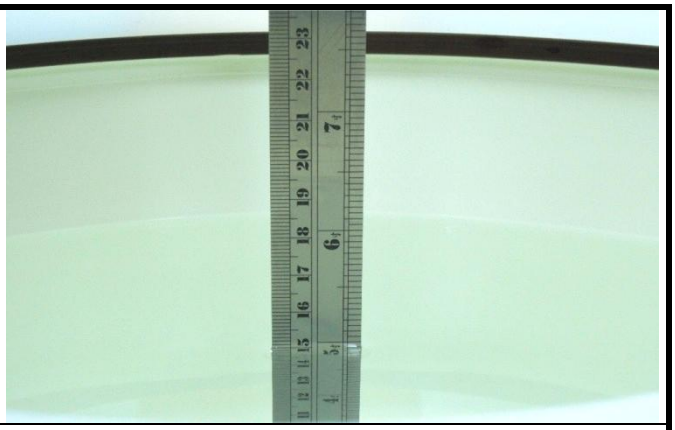
Photo of Liquid Height for Head Position	**Photo of Liquid Height for Body Position**

The dielectric properties of the head tissue simulating liquids are defined in IEEE 1528, and KDB 865664 D01 Appendix A. For the body tissue simulating liquids, the dielectric properties are defined in KDB 865664 D01 Appendix A. The dielectric properties of the tissue simulating liquids were verified prior to the SAR evaluation using a dielectric assessment kit and a network analyzer.

Table-3.1 Targets of Tissue Simulating Liquid

Frequency (MHz)	Target Permittivity	Range of ±5%	Target Conductivity	Range of ±5%
For Head				
750	41.9	39.8 ~ 44.0	0.89	0.85 ~ 0.93
835	41.5	39.4 ~ 43.6	0.90	0.86 ~ 0.95
900	41.5	39.4 ~ 43.6	0.97	0.92 ~ 1.02
1450	40.5	38.5 ~ 42.5	1.20	1.14 ~ 1.26
1640	40.3	38.3 ~ 42.3	1.29	1.23 ~ 1.35
1750	40.1	38.1 ~ 42.1	1.37	1.30 ~ 1.44
1800	40.0	38.0 ~ 42.0	1.40	1.33 ~ 1.47
1900	40.0	38.0 ~ 42.0	1.40	1.33 ~ 1.47
2000	40.0	38.0 ~ 42.0	1.40	1.33 ~ 1.47
2300	39.5	37.5 ~ 41.5	1.67	1.59 ~ 1.75
2450	39.2	37.2 ~ 41.2	1.80	1.71 ~ 1.89
2600	39.0	37.1 ~ 41.0	1.96	1.86 ~ 2.06
3500	37.9	36.0 ~ 39.8	2.91	2.76 ~ 3.06
5200	36.0	34.2 ~ 37.8	4.66	4.43 ~ 4.89
5300	35.9	34.1 ~ 37.7	4.76	4.52 ~ 5.00
5500	35.6	33.8 ~ 37.4	4.96	4.71 ~ 5.21
5600	35.5	33.7 ~ 37.3	5.07	4.82 ~ 5.32
5800	35.3	33.5 ~ 37.1	5.27	5.01 ~ 5.53
For Body				
750	55.5	52.7 ~ 58.3	0.96	0.91 ~ 1.01
835	55.2	52.4 ~ 58.0	0.97	0.92 ~ 1.02
900	55.0	52.3 ~ 57.8	1.05	1.00 ~ 1.10
1450	54.0	51.3 ~ 56.7	1.30	1.24 ~ 1.37
1640	53.8	51.1 ~ 56.5	1.40	1.33 ~ 1.47
1750	53.4	50.7 ~ 56.1	1.49	1.42 ~ 1.56
1800	53.3	50.6 ~ 56.0	1.52	1.44 ~ 1.60
1900	53.3	50.6 ~ 56.0	1.52	1.44 ~ 1.60
2000	53.3	50.6 ~ 56.0	1.52	1.44 ~ 1.60
2300	52.9	50.3 ~ 55.5	1.81	1.72 ~ 1.90
2450	52.7	50.1 ~ 55.3	1.95	1.85 ~ 2.05
2600	52.5	49.9 ~ 55.1	2.16	2.05 ~ 2.27
3500	51.3	48.7 ~ 53.9	3.31	3.14 ~ 3.48
5200	49.0	46.6 ~ 51.5	5.30	5.04 ~ 5.57
5300	48.9	46.5 ~ 51.3	5.42	5.15 ~ 5.69
5500	48.6	46.2 ~ 51.0	5.65	5.37 ~ 5.93
5600	48.5	46.1 ~ 50.9	5.77	5.48 ~ 6.06
5800	48.2	45.8 ~ 50.6	6.00	5.70 ~ 6.30

The following table gives the recipes for tissue simulating liquids.

Table-3.2 Recipes of Tissue Simulating Liquid

Tissue Type	Bactericide	DGBE	HEC	NaCl	Sucrose	Triton X-100	Water	Diethylene Glycol Mono-hexylether
H750	0.2	-	0.2	1.5	56.0	-	42.1	-
H835	0.2	-	0.2	1.5	57.0	-	41.1	-
H900	0.2	-	0.2	1.4	58.0	-	40.2	-
H1450	-	43.3	-	0.6	-	-	56.1	-
H1640	-	45.8	-	0.5	-	-	53.7	-
H1750	-	47.0	-	0.4	-	-	52.6	-
H1800	-	44.5	-	0.3	-	-	55.2	-
H1900	-	44.5	-	0.2	-	-	55.3	-
H2000	-	44.5	-	0.1	-	-	55.4	-
H2300	-	44.9	-	0.1	-	-	55.0	-
H2450	-	45.0	-	0.1	-	-	54.9	-
H2600	-	45.1	-	0.1	-	-	54.8	-
H3500	-	8.0	-	0.2	-	20.0	71.8	-
H5G	-	-	-	-	-	17.2	65.5	17.3
B750	0.2	-	0.2	0.8	48.8	-	50.0	-
B835	0.2	-	0.2	0.9	48.5	-	50.2	-
B900	0.2	-	0.2	0.9	48.2	-	50.5	-
B1450	-	34.0	-	0.3	-	-	65.7	-
B1640	-	32.5	-	0.3	-	-	67.2	-
B1750	-	31.0	-	0.2	-	-	68.8	-
B1800	-	29.5	-	0.4	-	-	70.1	-
B1900	-	29.5	-	0.3	-	-	70.2	-
B2000	-	30.0	-	0.2	-	-	69.8	-
B2300	-	31.0	-	0.1	-	-	68.9	-
B2450	-	31.4	-	0.1	-	-	68.5	-
B2600	-	31.8	-	0.1	-	-	68.1	-
B3500	-	28.8	-	0.1	-	-	71.1	-
B5G	-	-	-	-	-	10.7	78.6	10.7

3.3 SAR System Verification

The system check verifies that the system operates within its specifications. It is performed daily or before every SAR measurement. The system check uses normal SAR measurements in the flat section of the phantom with a matched dipole at a specified distance. The system verification setup is shown as below.

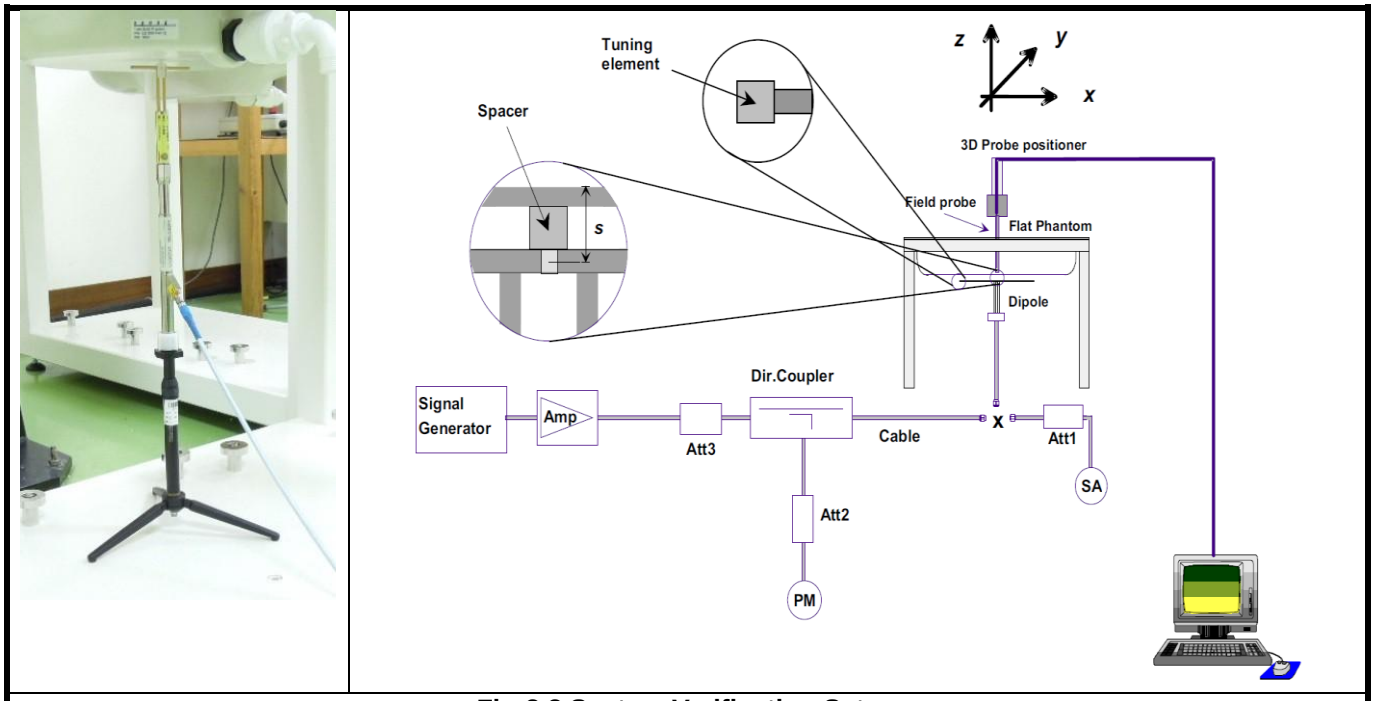

Fig-3.3 System Verification Setup

The validation dipole is placed beneath the flat phantom with the specific spacer in place. The distance spacer is touch the phantom surface with a light pressure at the reference marking and be oriented parallel to the long side of the phantom. The spectrum analyzer measures the forward power at the location of the system check dipole connector. The signal generator is adjusted for the desired forward power (250 mW is used for 700 MHz to 3 GHz, 100 mW is used for 3.5 GHz to 6 GHz) at the dipole connector and the power meter is read at that level. After connecting the cable to the dipole, the signal generator is readjusted for the same reading at power meter.

After system check testing, the SAR result will be normalized to 1W forward input power and compared with the reference SAR value derived from validation dipole certificate report. The deviation of system check should be within 10 %.

3.4 SAR Measurement Procedure

According to the SAR test standard, the recommended procedure for assessing the peak spatial-average SAR value consists of the following steps:

(a) Power reference measurement
(b) Area scan
(c) Zoom scan
(d) Power drift measurement

The SAR measurement procedures for each of test conditions are as follows:

(a) Make EUT to transmit maximum output power
(b) Measure conducted output power through RF cable
(c) Place the EUT in the specific position of phantom
(d) Perform SAR testing steps on the DASY system
(e) Record the SAR value

3.4.1 Area & Zoom Scan Procedure

First Area Scan is used to locate the approximate location(s) of the local peak SAR value(s). The measurement grid within an Area Scan is defined by the grid extent, grid step size and grid offset. Next, in order to determine the EM field distribution in a three-dimensional spatial extension, Zoom Scan is required. The Zoom Scan is performed around the highest E-field value to determine the averaged SAR-distribution over 10 g. According to KDB 865664 D01, the resolution for Area and Zoom scan is specified in the table below.

Items	<= 2 GHz	2-3 GHz	3-4 GHz	4-5 GHz	5-6 GHz
Area Scan (Δx, Δy)	<= 15 mm	<= 12 mm	<= 12 mm	<= 10 mm	<= 10 mm
Zoom Scan (Δx, Δy)	<= 8 mm	<= 5 mm	<= 5 mm	<= 4 mm	<= 4 mm
Zoom Scan (Δz)	<= 5 mm	<= 5 mm	<= 4 mm	<= 3 mm	<= 2 mm
Zoom Scan Volume	>= 30 mm	>= 30 mm	>= 28 mm	>= 25 mm	>= 22 mm

Note:

When zoom scan is required and report SAR is <= 1.4 W/kg, the zoom scan resolution of Δx / Δy (2-3GHz: <= 8 mm, 3-4GHz: <= 7 mm, 4-6GHz: <= 5 mm) may be applied.

3.4.2 Volume Scan Procedure

The volume scan is used for assess overlapping SAR distributions for antennas transmitting in different frequency bands. It is equivalent to an oversized zoom scan used in standalone measurements. The measurement volume will be used to enclose all the simultaneous transmitting antennas. For antennas transmitting simultaneously in different frequency bands, the volume scan is measured separately in each frequency band. In order to sum correctly to compute the 1g aggregate SAR, the EUT remain in the same test position for all measurements and all volume scan use the same spatial resolution and grid spacing. When all volume scan were completed, the software, SEMCAD postprocessor can combine and subsequently superpose these measurement data to calculating the multiband SAR.

3.4.3 Power Drift Monitoring

All SAR testing is under the EUT install full charged battery and transmit maximum output power. In DASY measurement software, the power reference measurement and power drift measurement procedures are used for monitoring the power drift of EUT during SAR test. Both these procedures measure the field at a specified reference position before and after the SAR testing. The software will calculate the field difference in dB. If the power drift more than 5%, the SAR will be retested.

3.4.4 Spatial Peak SAR Evaluation

The procedure for spatial peak SAR evaluation has been implemented according to the test standard. It can be conducted for 1g and 10g, as well as for user-specific masses. The DASY software includes all numerical procedures necessary to evaluate the spatial peak SAR value.

The base for the evaluation is a “cube” measurement. The measured volume must include the 1g and 10g cubes with the highest averaged SAR values. For that purpose, the center of the measured volume is aligned to the interpolated peak SAR value of a previously performed area scan.

The entire evaluation of the spatial peak values is performed within the post-processing engine (SEMCAD). The system always gives the maximum values for the 1g and 10g cubes. The algorithm to find the cube with highest averaged SAR is divided into the following stages:

(a) Extraction of the measured data (grid and values) from the Zoom Scan
(b) Calculation of the SAR value at every measurement point based on all stored data (A/D values and measurement parameters)
(c) Generation of a high-resolution mesh within the measured volume
(d) Interpolation of all measured values form the measurement grid to the high-resolution grid
(e) Extrapolation of the entire 3-D field distribution to the phantom surface over the distance from sensor to surface
(f) Calculation of the averaged SAR within masses of 1g and 10g

3.4.5 SAR Averaged Methods

In DASY, the interpolation and extrapolation are both based on the modified Quadratic Shepard’s method. The interpolation scheme combines a least-square fitted function method and a weighted average method which are the two basic types of computational interpolation and approximation.

Extrapolation routines are used to obtain SAR values between the lowest measurement points and the inner phantom surface. The extrapolation distance is determined by the surface detection distance and the probe sensor offset. The uncertainty increases with the extrapolation distance. To keep the uncertainty within 1% for the 1 g and 10 g cubes, the extrapolation distance should not be larger than 5 mm.

4. SAR Measurement Evaluation

4.1 EUT Configuration and Setting

<Considerations Related to WLAN for Setup and Testing>

In general, various vendor specific external test software and chipset based internal test modes are typically used for SAR measurement. These chipset based test mode utilities are generally hardware and manufacturer dependent, and often include substantial flexibility to reconfigure or reprogram a device. A Wi-Fi device must be configured to transmit continuously at the required data rate, channel bandwidth and signal modulation, using the highest transmission duty factor supported by the test mode tools for SAR measurement. The test frequencies established using test mode must correspond to the actual channel frequencies. When 802.11 frame gaps are accounted for in the transmission, a maximum transmission duty factor of 92 – 96% is typically achievable in most test mode configurations. A minimum transmission duty factor of 85% is required to avoid certain hardware and device implementation issues related to wide range SAR scaling. In addition, a periodic transmission duty factor is required for current generation SAR systems to measure SAR correctly. The reported SAR must be scaled to 100% transmission duty factor to determine compliance at the maximum tune-up tolerance limit.

According to KDB 248227 D01, this device has installed WLAN engineering testing software which can provide continuous transmitting RF signal. During WLAN SAR testing, this device was operated to transmit continuously at the maximum transmission duty with specified transmission mode, operating frequency, lowest data rate, and maximum output power.

Initial Test Configuration

An initial test configuration is determined for OFDM transmission modes in 2.4 GHz and 5 GHz bands according to the channel bandwidth, modulation and data rate combination(s) with the highest maximum output power specified for production units in each standalone and aggregated frequency band. When the same maximum power is specified for multiple transmission modes in a frequency band, the largest channel bandwidth, lowest order modulation, lowest data rate and lowest order 802.11a/g/n/ac mode is used for SAR measurement, on the highest measured output power channel in the initial test configuration, for each frequency band.

Subsequent Test Configuration

SAR measurement requirements for the remaining 802.11 transmission mode configurations that have not been tested in the initial test configuration are determined separately for each standalone and aggregated frequency band, in each exposure condition, according to the maximum output power specified for production units. Additional power measurements may be required to determine if SAR measurements are required for subsequent highest output power channels in a subsequent test configuration. When the highest reported SAR for the initial test configuration according to the initial test position or fixed exposure position requirements, is adjusted by the ratio of the subsequent test configuration to initial test configuration specified maximum output power and the adjusted SAR is ≤ 1.2 W/kg, SAR is not required for that subsequent test configuration.

SAR Test Configuration and Channel Selection

When multiple channel bandwidth configurations in a frequency band have the same specified maximum output power, the initial test configuration is using largest channel bandwidth, lowest order modulation, lowest data rate, and lowest order 802.11 mode (i.e., 802.11a is chosen over 802.11n then 802.11ac, or 802.11g is chosen over 802.11n). After an initial test configuration is determined, if multiple test channels have the same measured maximum output power, the channel chosen for SAR measurement is determined according to the following.

1) The channel closest to mid-band frequency is selected for SAR measurement.

2) For channels with equal separation from mid-band frequency; for example, high and low channels or two mid-band channels, the higher frequency (number) channel is selected for SAR measurement.

Test Reduction for U-NII-1 (5.2 GHz) and U-NII-2A (5.3 GHz) Bands

For devices that operate in both U-NII bands using the same transmitter and antenna(s), SAR test reduction is determined according to the following.

1) When the same maximum output power is specified for both bands, begin SAR measurement in U-NII-2A band by applying the OFDM SAR requirements. If the highest reported SAR for a test configuration is ≤ 1.2 W/kg, SAR is not required for U-NII-1 band for that configuration (802.11 mode and exposure condition).

2) When different maximum output power is specified for the bands, begin SAR measurement in the band with higher specified maximum output power. The highest reported SAR for the tested configuration is adjusted by the ratio of lower to higher specified maximum output power for the two bands. When the adjusted SAR is ≤ 1.2 W/kg, SAR is not required for the band with lower maximum output power in that test configuration.

<Considerations Related to Bluetooth for Setup and Testing>

This device has installed Bluetooth engineering testing software which can provide continuous transmitting RF signal. During Bluetooth SAR testing, this device was operated to transmit continuously at the maximum transmission duty with specified transmission mode, operating frequency, lowest data rate, and maximum output power.

4.2 EUT Testing Position

For full-size device, according to KDB 616217 D04, SAR evaluation is required for back surface and edges of the devices. The back surface and edges of the device are tested with the device touching the phantom. Exposures from antennas through the front surface of the display section of a device are generally limited to the user's hands. Exposures to hands for typical consumer transmitters used in devices are not expected to exceed the extremity SAR limit; therefore, SAR evaluation for the front surface of device display screens are generally not necessary. When voice mode is supported on a device and it is limited to speaker mode or headset operations only, additional SAR testing for this type of voice use is not required.

4.2.1 SAR Test Exclusion Evaluations

According to KDB 447498 D01, the SAR test exclusion condition is based on source-based time-averaged maximum conducted output power, adjusted for tune-up tolerance, and the minimum test separation distance required for the exposure conditions. The SAR exclusion threshold is determined by the following formula.

4. For the test separation distance <= 50 mm

$$\frac{\textbf{Max. Tune up Power}_{(mW)}}{\textbf{Min. Test Separation Distance}_{(mm)}} \times \sqrt{f_{(GHz)}} \leq 3.0 \text{ for SAR-1g, } \leq 7.5 \text{ for SAR-10g}$$

When the minimum test separation distance is < 5 mm, a distance of 5 mm is applied to determine SAR test exclusion.

5. For the test separation distance > 50 mm, and the frequency at 100 MHz to 1500 MHz

$$\left[(\text{Threshold at 50 mm in Step 1}) + (\text{Test Separation Distance} - 50\text{ mm}) \times \left(\frac{f_{(MHz)}}{150}\right)\right]_{(mW)}$$

6. For the test separation distance > 50 mm, and the frequency at > 1500 MHz to 6 GHz

$$[(\text{Threshold at 50 mm in Step 1}) + (\text{Test Separation Distance} - 50\text{ mm}) \times 10]_{(mW)}$$

<For BT Ant Main>

Mode	Max. Tune-up Power (dBm)	Max. Tune-up Power (mW)	Rear Face			Left Side			Right Side			Top Side			Bottom Side		
			Ant. to Surface (mm)	Calculated Result	Require SAR Testing?	Ant. to Surface (mm)	Calculated Result	Require SAR Testing?	Ant. to Surface (mm)	Calculated Result	Require SAR Testing?	Ant. to Surface (mm)	Calculated Result	Require SAR Testing?	Ant. to Surface (mm)	Calculated Result	Require SAR Testing?
BT	4.5	2.82	6.45	0.73 mW	No	152	1115 mW	No	38	0.12 mW	No	3	0.89 mW	No	162	1215 mW	No

<For WLAN MIMO>

Mode	Max. Tune-up Power (dBm)	Max. Tune-up Power (mW)	Rear Face			Left Side			Right Side			Top Side			Bottom Side		
			Ant. to Surface (mm)	Calculated Result	Require SAR Testing?	Ant. to Surface (mm)	Calculated Result	Require SAR Testing?	Ant. to Surface (mm)	Calculated Result	Require SAR Testing?	Ant. to Surface (mm)	Calculated Result	Require SAR Testing?	Ant. to Surface (mm)	Calculated Result	Require SAR Testing?
WLAN 2.4G	19.0	79.0	6.45	19.22 mW	**Yes**	54	136 mW	**Yes**	38	3.26 mW	No	3	24.79 mW	**Yes**	162	1216 mW	No
WLAN 5.2G	17.5	56.0	6.45	19.87 mW	**Yes**	54	106 mW	**Yes**	38	3.37 mW	No	3	25.64 mW	**Yes**	162	1186 mW	No
WLAN 5.3G	17.5	56.0	6.45	20.03 mW	**Yes**	54	105 mW	**Yes**	38	3.4 mW	No	3	25.83 mW	**Yes**	162	1185 mW	No
WLAN 5.6G	17.5	56.0	6.45	20.76 mW	**Yes**	54	103 mW	**Yes**	38	3.52 mW	No	3	26.79 mW	**Yes**	162	1183 mW	No
WLAN 5.8G	17.5	56.0	6.45	20.95 mW	**Yes**	54	102 mW	**Yes**	38	3.56 mW	No	3	27.03 mW	**Yes**	162	1182 mW	No

Note:

1. When separation distance <= 50 mm and the calculated result shown in above table is <= 3.0 for SAR-1g exposure condition, or <= 7.5 for SAR-10g exposure condition, the SAR testing exclusion is applied.
2. When separation distance > 50 mm and the device output power is less than the calculated result (power threshold, mW) shown in above table, the SAR testing exclusion is applied.

4.3 Tissue Verification

The measuring results for tissue simulating liquid are shown as below.

Test Date	Tissue Type	Frequency (MHz)	Liquid Temp. (℃)	Measured Conductivity (σ)	Measured Permittivity (ε_r)	Target Conductivity (σ)	Target Permittivity (ε_r)	Conductivity Deviation (%)	Permittivity Deviation (%)
Mar. 02, 2018	Body	2450	23.2	2.024	51.655	1.95	52.7	3.79	-1.98
Jun. 27, 2018	Body	2450	23.2	2.036	53.942	1.95	52.7	4.41	2.36
May. 23, 2018	Body	5250	23.2	5.388	47.505	5.36	48.9	0.52	-2.85
Jun. 07, 2018	Body	5250	23.5	5.462	47.21	5.36	48.9	1.90	-3.46
Jun. 25, 2018	Body	5250	23.3	5.118	51.052	5.36	48.9	-4.51	4.40
May. 23, 2018	Body	5600	23.2	5.806	47.016	5.77	48.5	0.62	-3.06
Jun. 25, 2018	Body	5600	23.3	5.94	47.006	5.77	48.5	2.95	-3.08
May. 23, 2018	Body	5800	23.2	6.117	46.575	6	48.2	1.95	-3.37
Jun. 25, 2018	Body	5800	23.3	6.231	46.62	6	48.2	3.85	-3.28

Note:

The dielectric properties of the tissue simulating liquid must be measured within 24 hours before the SAR testing and within ±5% of the target values. Liquid temperature during the SAR testing must be within ±2 ℃.

4.4 System Validation

The SAR measurement system was validated according to procedures in KDB 865664 D01. The validation status in tabulated summary is as below.

Test Date	Probe S/N	Calibration Point		Measured Conductivity (σ)	Measured Permittivity (ε_r)	Validation for CW			Validation for Modulation		
						Sensitivity Range	Probe Linearity	Probe Isotropy	Modulation Type	Duty Factor	PAR
Mar. 02, 2018	7375	Body	2450	2.024	51.655	Pass	Pass	Pass	N/A	N/A	N/A
Jun. 27, 2018	7346	Body	2450	2.036	53.942	Pass	Pass	Pass	OFDM	N/A	Pass
May. 23, 2018	3650	Body	5250	5.388	47.505	Pass	Pass	Pass	OFDM	N/A	Pass
Jun. 07, 2018	3650	Body	5250	5.462	47.210	Pass	Pass	Pass	OFDM	N/A	Pass
Jun. 25, 2018	3650	Body	5250	5.118	51.052	Pass	Pass	Pass	OFDM	N/A	Pass
May. 23, 2018	3650	Body	5600	5.806	47.016	Pass	Pass	Pass	OFDM	N/A	Pass
May. 23, 2018	3650	Body	5800	6.117	46.575	Pass	Pass	Pass	OFDM	N/A	Pass
Jun. 25, 2018	3650	Body	5800	6.231	46.62	Pass	Pass	Pass	OFDM	N/A	Pass

4.5 System Verification

The measuring result for system verification is tabulated as below.

Test Date	Mode	Frequency (MHz)	1W Target SAR-1g (W/kg)	Measured SAR-1g (W/kg)	Normalized to 1W SAR-1g (W/kg)	Deviation (%)	Dipole S/N	Probe S/N	DAE S/N
Mar. 02, 2018	Body	2450	49.70	12.4	49.60	-0.20	737	7375	917
Jun. 27, 2018	Body	2450	49.70	11.7	46.80	-5.84	737	7346	679
May. 23, 2018	Body	5250	76.50	7.29	72.90	-4.71	1019	3650	1277
Jun. 07, 2018	Body	5250	76.50	7.88	78.80	3.01	1019	3650	1277
Jun. 25, 2018	Body	5250	76.50	7.36	73.60	-3.79	1019	3650	1277
May. 23, 2018	Body	5600	79.70	8.00	80.00	0.38	1019	3650	1277
Jun. 25, 2018	Body	5600	79.70	7.86	78.60	-1.38	1019	3650	1277
May. 23, 2018	Body	5800	76.90	7.57	75.70	-1.56	1019	3650	1277
Jun. 25, 2018	Body	5800	76.90	8.07	80.70	4.94	1019	3650	1277

Note:

Comparing to the reference SAR value provided by SPEAG, the validation data should be within its specification of 10 %. The result indicates the system check can meet the variation criterion and the plots can be referred to Appendix A of this report.

4.6 Maximum Output Power

4.6.1 Maximum Target Conducted Power

The maximum conducted average power (Unit: dBm) including tune-up tolerance is shown as below.

Some channels have reduced power and were tested at the reduced power

802.11	Channel list	Power value (dBm)
g	Channel 12	15
	Channel 13	9
n_HT20	Channel 12	13.5
	Channel 13	4.5
n_HT40	Channel 10	14
	Channel 11	9

802.11	Channel list	Power value (dBm)
n_HT20	Channel 140	13
n_HT40	Channel 38	12
	Channel 62	12
	Channel 102	12
ac_VHT20	Channel 140	13
ac_VHT40	Channel 38	12
	Channel 62	12
	Channel 102	12
ac_VHT80	Channel 42	11.5
	Channel 58	11.5
	Channel 106	11.5

Mode	Ant.	802.11b	802.11g	802.11n HT20	802.11n HT40
2.4G WLAN	MIMO	Main: 9.0 Aux: 9.0 MIMO: 12.0	Main: Ch1,6,11:16.0 Ch12:15.0 Ch13:9 Aux: Ch1,6,11:16.0 Ch12:15.0 Ch13:9 MIMO: Ch1,6,11:19.0 Ch12:19.0 Ch13:12.0	Main: Ch1,6,11:16.0 Ch12:13.5 Ch13:4.5 Aux: Ch1,6,11:16.0 Ch12:13.5 Ch13:4.5 MIMO: Ch1,6,11:19.0 Ch12:16.5 Ch13:7.5	Main: Ch3,6,9:16.0 Ch10:14.0 Ch11:9.0 Aux: Ch3,6,9:16.0 Ch10:14.0 Ch11:9.0 MIMO: Ch3,6,9:19.0 Ch10:17.0 Ch11:12.0

Mode	Ant.	802.11a	802.11n HT20	802.11n HT40	802.11ac VHT20	802.11ac VHT40	802.11ac VHT80
5.2G WLAN	MIMO	Main: 14.5 Aux: 14.5 MIMO: 17.5	Main: 14.0 Aux: 14.0 MIMO: 17.0	Main: Ch38:12.0 Ch46:14.0 Aux: Ch38:12.0 Ch46:14.0 MIMO: Ch38:15.0 Ch46:17.0	Main: 14.0 Aux: 14.0 MIMO: 17.0	Main: Ch38:12.0 Ch46:14.0 Aux: Ch38:12.0 Ch46:14.0 MIMO: Ch38:15.0 Ch46:17.0	Main: 11.5 Aux: 11.5 MIMO: 14.5
5.3G WLAN	MIMO	Main: 14.5 Aux: 14.5 MIMO: 17.5	Main: 14.0 Aux: 14.0 MIMO: 17.0	Main: Ch54:14.0 Ch62:12.0 Aux: Ch54:14.0 Ch62:12.0 MIMO: Ch54:17.0 Ch62:15.0	Main: 14.0 Aux: 14.0 MIMO: 17.0	Main: Ch54:14.0 Ch62:12.0 Aux: Ch54:14.0 Ch62:12.0 MIMO: Ch54:17.0 Ch62:15.0	Main: 11.5 Aux: 11.5 MIMO: 14.5
5.6G WLAN	MIMO	Main: 14.5 Aux: 14.5 MIMO: 17.5	Main: Ch100,116,132, 144:14.0 Ch140:13.0 Aux: Ch100,116,132, 144:14.0 Ch140:13.0 MIMO: Ch100,116,132, 144:17.0 Ch140:16.0	Main: Ch102:12.0 Ch110,118,126, 134,142:14.0 Aux: Ch102:12.0 Ch110,118,126, 134,142:14.0 MIMO: Ch102:15.0 Ch110,118,126, 134,142:17.0	Main: Ch100,116,132, 144:14.0 Ch140:13.0 Aux: Ch100,116,132, 144:14.0 Ch140:13.0 MIMO: Ch100,116,132, 144:17.0 Ch140:16.0	Main: Ch102:12.0 Ch110,118,126, 134,142:14.0 Aux: Ch102:12.0 Ch110,118,126, 134,142:14.0 MIMO: Ch102:15.0 Ch110,118,126, 134,142:17.0	Main: Ch106:11.5 Ch122,138:14.0 Aux: Ch106:11.5 Ch122,138:14.0 MIMO: Ch106:14.5 Ch122,138:17.0
5.8G WLAN	MIMO	Main: 14.5 Aux: 14.5 MIMO: 17.5	Main: 14.0 Aux: 14.0 MIMO: 17.0	Main: 14.0 Aux: 14.0 MIMO: 17.0	Main: 14.0 Aux: 14.0 MIMO: 17.0	Main: 14.0 Aux: 14.0 MIMO: 17.0	Main: 14.0 Aux: 14.0 MIMO: 17.0

Mode	2.4G Bluetooth
Bluetooth DH	4.5
Bluetooth 2DH	4.5
Bluetooth 3DH	4.5
Bluetooth LE	4.5

Note: The 802.11b and 802.11a were chosen for main test.

4.6.2 Measured Conducted Power Result

The measuring conducted average power (Unit: dBm) is shown as below.

<WLAN 2.4G>

Mode	Channel	Frequency (MHz)	Ant		Average Power (MIMO Ant.)
802.11b	1	2412	2Tx Main	8.92	11.89
			2Tx Aux	8.76	
	6	2437	2Tx Main	8.83	11.81
			2Tx Aux	8.68	
	11	2462	2Tx Main	8.78	11.73
			2Tx Aux	8.57	
	12	2467	2Tx Main	8.71	11.67
			2Tx Aux	8.53	
	13	2472	2Tx Main	8.63	11.62
			2Tx Aux	8.50	
802.11g	1	2412	2Tx Main	15.56	18.64
			2Tx Aux	15.22	
	6	2437	2Tx Main	15.39	18.53
			2Tx Aux	15.18	
	11	2462	2Tx Main	15.71	18.83
			2Tx Aux	15.46	
	12	2467	2Tx Main	14.84	17.80
			2Tx Aux	14.74	
	13	2472	2Tx Main	9.00	12.00
			2Tx Aux	8.89	
802.11n (HT20)	1	2412	2Tx Main	15.59	18.99
			2Tx Aux	15.85	
	6	2437	2Tx Main	15.61	18.93
			2Tx Aux	15.71	
	11	2462	2Tx Main	15.53	18.89
			2Tx Aux	15.71	
	12	2467	2Tx Main	13.44	16.45
			2Tx Aux	12.91	
	13	2472	2Tx Main	4.33	7.48
			2Tx Aux	4.10	
802.11n (HT40)	3	2422	2Tx Main	15.81	18.95
			2Tx Aux	14.22	
	6	2437	2Tx Main	15.82	18.93
			2Tx Aux	14.14	
	9	2452	2Tx Main	15.78	18.93
			2Tx Aux	14.21	
	10	2457	2Tx Main	13.34	16.96
			2Tx Aux	12.83	
	11	2462	2Tx Main	8.23	11.87
			2Tx Aux	7.76	

<WLAN 5.3G>

Mode	Channel	Frequency (MHz)	Ant		Average Power (MIMO Ant.)
802.11a	52	5260	2Tx Main	14.32	17.36
			2Tx Aux	14.37	
	56	5280	2Tx Main	14.15	17.20
			2Tx Aux	14.23	
	60	5300	2Tx Main	14.17	17.35
			2Tx Aux	14.50	
	64	5320	2Tx Main	14.38	17.45
			2Tx Aux	14.50	

<WLAN 5.6G>

Mode	Channel	Frequency (MHz)	Ant		Average Power (MIMO Ant.)
802.11a	100	5500	2Tx Main	14.12	17.18
			2Tx Aux	14.22	
	116	5580	2Tx Main	14.31	17.31
			2Tx Aux	14.29	
	132	5660	2Tx Main	14.48	17.42
			2Tx Aux	14.34	
	140	5700	2Tx Main	14.47	17.38
			2Tx Aux	14.26	
	144	5720	2Tx Main	14.48	17.40
			2Tx Aux	14.29	

<WLAN 5.8G>

Mode	Channel	Frequency (MHz)	Ant		Average Power (MIMO Ant.)
802.11a	149	5745	2Tx Main	14.44	17.39
			2Tx Aux	14.31	
	153	5765	2Tx Main	14.42	17.47
			2Tx Aux	14.49	
	157	5785	2Tx Main	14.46	17.49
			2Tx Aux	14.49	
	161	5805	2Tx Main	14.05	17.20
			2Tx Aux	14.32	
	165	5825	2Tx Main	14.12	17.17
			2Tx Aux	14.19	

<Bluetooth>

Mode	Channel	Frequency (MHz)	Average Power
Bluetooth EDR	0	2402	4.29
	39	2441	**4.45**
	78	2480	4.16
LE	0	2402	4.11
	19	2440	**4.41**
	39	2480	4.08

4.7 SAR Testing Results

4.7.1 SAR Test Reduction Considerations

<KDB 447498 D01, General RF Exposure Guidance>

Testing of other required channels within the operating mode of a frequency band is not required when the reported SAR for the mid-band or highest output power channel is:

(1) ≤ 0.8 W/kg or 2.0 W/kg, for 1-g or 10-g respectively, when the transmission band is ≤ 100 MHz

(2) ≤ 0.6 W/kg or 1.5 W/kg, for 1-g or 10-g respectively, when the transmission band is between 100 MHz and 200 MHz

(3) ≤ 0.4 W/kg or 1.0 W/kg, for 1-g or 10-g respectively, when the transmission band is ≥ 200 MHz

<KDB 248227 D01, SAR Guidance for Wi-Fi Transmitters>

(1) For handsets operating next to ear, hotspot mode or mini-tablet configurations, the initial test position procedures were applied. The test position with the highest extrapolated peak SAR will be used as the initial test position. When the reported SAR of initial test position is <= 0.4 W/kg, SAR testing for remaining test positions is not required. Otherwise, SAR is evaluated at the subsequent highest peak SAR positions until the reported SAR result is <= 0.8 W/kg or all test positions are measured.

(2) For WLAN 2.4 GHz, the highest measured maximum output power channel for DSSS was selected for SAR measurement. When the reported SAR is <= 0.8 W/kg, no further SAR testing is required. Otherwise, SAR is evaluated at the next highest measured output power channel. When any reported SAR is > 1.2 W/kg, SAR is required for the third channel. For OFDM modes (802.11g/n), SAR is not required when the highest reported SAR for DSSS is adjusted by the ratio of OFDM to DSSS specified maximum output power and it is <= 1.2 W/kg.

(3) For WLAN 5 GHz, the initial test configuration was selected according to the transmission mode with the highest maximum output power. When the reported SAR of initial test configuration is > 0.8 W/kg, SAR is required for the subsequent highest measured output power channel until the reported SAR result is <= 1.2 W/kg or all required channels are measured. For other transmission modes, SAR is not required when the highest reported SAR for initial test configuration is adjusted by the ratio of subsequent test configuration to initial test configuration specified maximum output power and it is <= 1.2 W/kg.

(4) For WLAN MIMO mode, the power-based standalone SAR test exclusion or the sum of SAR provision in KDB 447498 to determine simultaneous transmission SAR test exclusion should be applied. Otherwise, SAR for MIMO mode will be measured with all applicable antennas transmitting simultaneously at the specified maximum output power of MIMO operation.

4.7.2 SAR Results for Body Exposure Condition (Test Separation Distance is 0 mm)

Plot No.	Band	Mode	Test Position	Ch.	Tx Antenna	Max. Tune-up Power (dBm)	Measured Conducted Power (dBm)	Scaling Factor	Power Drift (dB)	Measured SAR-1g (W/kg)	Scaled SAR-1g (W/kg)
	WLAN2.4G	802.11b	Rear Face	1	Main	9	8.92	1.02	0.00	0.156	0.16
					Aux	9	8.76	1.06		0.108	0.11
	WLAN2.4G	802.11b	Left Side	1	Main	9	8.92	1.02	-0.02	0.028	0.03
					Aux	9	8.76	1.06		0.02	0.02
	WLAN2.4G	802.11b	Top Side	1	Main	9	8.92	1.02	-0.08	0.078	0.08
					Aux	9	8.76	1.06		0.054	0.06
	WLAN2.4G	802.11g	Rear Face	1	Main	16	15.56	1.11	-0.01	0.645	0.71
					Aux	16	15.22	1.20		0.456	0.55
	WLAN2.4G	802.11n HT20	Rear Face	1	Main	16	15.59	1.10	0.06	0.653	0.72
					Aux	16	15.85	1.04		0.471	0.49
01	WLAN2.4G	802.11n HT40	Rear Face	3	Main	16	15.81	1.04	0.12	0.690	**0.72**
					Aux	16	14.22	1.51		0.476	**0.72**
	WLAN2.4G	802.11n HT40	Rear Face	6	Main	16.0	15.82	1.04	-0.06	0.662	0.69
					Aux	16.0	14.14	1.53		0.456	0.70
	WLAN2.4G	802.11n HT40	Rear Face	9	Main	16.0	15.78	1.05	-0.08	0.652	0.69
					Aux	16.0	14.21	1.51		0.447	0.68
	WLAN2.4G	802.11n HT40	Rear Face	10	Main	14.0	13.34	1.16	-0.13	0.412	0.48
					Aux	14.0	12.83	1.31		0.275	0.36
	WLAN2.4G	802.11n HT40	Rear Face	11	Main	9.0	8.23	1.19	0.08	0.126	0.15
					Aux	9.0	7.76	1.33		0.087	0.12
	WLAN5G	802.11a	Rear Face	64	Main	14.5	14.38	1.03	0.03	0.583	0.60
					Aux	14.5	14.50	1.00		0.413	0.41
	WLAN5G	802.11a	Left Side	64	Main	14.5	14.38	1.03	0.00	0.001	0.00
					Aux	14.5	14.50	1.00		0.001	0.00
02	WLAN5G	802.11a	Top Side	64	Main	14.5	14.38	1.03	-0.12	0.674	**0.69**
					Aux	14.5	14.50	1.00		0.584	**0.58**
	WLAN5G	802.11a	Rear Face	52	Main	14.5	14.32	1.04	-0.05	0.568	0.59
					Aux	14.5	14.37	1.03		0.396	0.41
	WLAN5G	802.11a	Rear Face	56	Main	14.5	14.15	1.08	0.02	0.476	0.52
					Aux	14.5	14.23	1.06		0.322	0.34
	WLAN5G	802.11a	Rear Face	60	Main	14.5	14.17	1.08	-0.09	0.567	0.61
					Aux	14.5	14.50	1.00		0.402	0.40
	WLAN5G	802.11a	Top Side	52	Main	14.5	14.32	1.04	0.13	0.561	0.58
					Aux	14.5	14.37	1.03		0.422	0.43
	WLAN5G	802.11a	Top Side	56	Main	14.5	14.15	1.08	0.05	0.602	0.65
					Aux	14.5	14.23	1.06		0.463	0.49
	WLAN5G	802.11a	Top Side	60	Main	14.5	14.17	1.08	0.14	0.634	0.68
					Aux	14.5	14.50	1.00		0.563	0.56
	WLAN5G	802.11a	Rear Face	132	Main	14.5	14.48	1.00	-0.05	0.719	0.72
					Aux	14.5	14.34	1.04		1.01	1.05
	WLAN5G	802.11a	Left Side	132	Main	14.5	14.48	1.00	0.00	0.001	0.00
					Aux	14.5	14.34	1.04		0.001	0.00
	WLAN5G	802.11a	Top Side	132	Main	14.5	14.48	1.00	0.02	0.689	0.69
					Aux	14.5	14.34	1.04		0.978	1.01
	WLAN5G	802.11a	Rear Face	100	Main	14.5	14.12	1.09	-0.09	0.576	0.63
					Aux	14.5	14.22	1.07		0.821	0.88
	WLAN5G	802.11a	Rear Face	116	Main	14.5	14.31	1.04	0.03	0.621	0.65
					Aux	14.5	14.29	1.05		0.930	0.98

Plot No.	Band	Mode	Test Position	Ch.	Tx Antenna	Max. Tune-up Power (dBm)	Measured Conducted Power (dBm)	Scaling Factor	Power Drift (dB)	Measured SAR-1g (W/kg)	Scaled SAR-1g (W/kg)
	WLAN5G	802.11a	Rear Face	140	Main	14.5	14.47	1.01	0.05	0.549	0.55
					Aux	14.5	14.26	1.06		0.795	0.84
	WLAN5G	802.11a	Rear Face	144	Main	14.5	14.48	1.00	0.12	0.582	0.58
					Aux	14.5	14.29	1.05		1.02	1.07
	WLAN5G	802.11a	Top Side	100	Main	14.5	14.12	1.09	0.07	0.742	0.81
					Aux	14.5	14.22	1.07		1.13	1.21
	WLAN5G	802.11a	Top Side	116	Main	14.5	14.31	1.04	-0.03	0.795	0.83
					Aux	14.5	14.29	1.05		1.12	1.18
	WLAN5G	802.11a	Top Side	140	Main	14.5	14.47	1.01	-0.07	0.752	0.76
					Aux	14.5	14.26	1.06		1.05	1.11
03	WLAN5G	802.11a	Top Side	144	Main	14.5	14.48	1.00	-0.15	0.915	**0.92**
					Aux	14.5	14.29	1.05		1.2	**1.26**
	WLAN5G	802.11a	Top Side	144	Main	14.5	14.48	1.00	0.02	0.908	0.91
					Aux	14.5	14.29	1.05		1.16	1.22
	WLAN5G	802.11a	Rear Face	157	Main	14.5	14.46	1.01	-0.08	0.662	0.67
					Aux	14.5	14.49	1.00		0.998	1.00
	WLAN5G	802.11a	Left Side	157	Main	14.5	14.46	1.01	0.02	0.001	0.00
					Aux	14.5	14.49	1.00		0.001	0.00
	WLAN5G	802.11a	Top Side	157	Main	14.5	14.46	1.01	-0.06	0.83	0.84
					Aux	14.5	14.49	1.00		1.25	1.25
	WLAN5G	802.11a	Rear Face	149	Main	14.5	14.44	1.01	0.01	0.656	0.67
					Aux	14.5	14.31	1.04		0.976	1.02
	WLAN5G	802.11a	Rear Face	153	Main	14.5	14.42	1.02	0.05	0.66	0.67
					Aux	14.5	14.49	1.00		1.02	1.02
	WLAN5G	802.11a	Rear Face	161	Main	14.5	14.05	1.11	0.03	0.72	0.79
					Aux	14.5	14.32	1.04		1.10	1.15
	WLAN5G	802.11a	Rear Face	165	Main	14.5	14.12	1.09	-0.14	0.71	0.77
					Aux	14.5	14.19	1.07		1.05	1.13
	WLAN5G	802.11a	Top Side	149	Main	14.5	14.44	1.01	0.05	0.80	0.81
					Aux	14.5	14.31	1.04		1.23	1.29
04	WLAN5G	802.11a	Top Side	153	Main	14.5	14.42	1.02	-0.08	0.927	**0.94**
					Aux	14.5	14.49	1.00		1.31	**1.31**
	WLAN5G	802.11a	Top Side	161	Main	14.5	14.05	1.11	0.02	0.765	0.85
					Aux	14.5	14.32	1.04		1.18	1.23
	WLAN5G	802.11a	Top Side	165	Main	14.5	14.12	1.09	0.09	0.725	0.79
					Aux	14.5	14.19	1.07		1.02	1.10
	WLAN5G	802.11a	Top Side	153	Main	14.5	14.42	1.02	-0.09	0.922	0.94
					Aux	14.5	14.49	1.00		1.27	1.27
05	BT	BR / EDR	Rear Face	39	Main	4.5	4.45	1.01	-0.10	0.168	**0.17**
	BT	BR / EDR	Top Side	39	Main	4.5	4.45	1.01	0.03	0.129	0.13
	BT	BR / EDR	Rear Face	0	Main	4.5	4.29	1.05	0.13	0.138	0.14
	BT	BR / EDR	Rear Face	78	Main	4.5	4.16	1.08	0.00	0.13	0.14

Note: The "< 0.001" means there is no SAR value or the SAR is too low to be measured.

4.7.3 SAR Measurement Variability

According to KDB 865664 D01, SAR measurement variability was assessed for each frequency band, which is determined by the SAR probe calibration point and tissue-equivalent medium used for the device measurements. When both head and body tissue-equivalent media are required for SAR measurements in a frequency band, the variability measurement procedures should be applied to the tissue medium with the highest measured SAR, using the highest measured SAR configuration for that tissue-equivalent medium. Alternatively, if the highest measured SAR for both head and body tissue-equivalent media are ≤ 1.45 W/kg and the ratio of these highest SAR values, i.e., largest divided by smallest value, is ≤ 1.10, the highest SAR configuration for either head or body tissue-equivalent medium may be used to perform the repeated measurement. These additional measurements are repeated after the completion of all measurements requiring the same head or body tissue-equivalent medium in a frequency band. The test device should be returned to ambient conditions (normal room temperature) with the battery fully charged before it is re-mounted on the device holder for the repeated measurement(s) to minimize any unexpected variations in the repeated results.

SAR repeated measurement procedure:

1. When the highest measured SAR is < 0.80 W/kg, repeated measurement is not required.
2. When the highest measured SAR is >= 0.80 W/kg, repeat that measurement once.
3. If the ratio of largest to smallest SAR for the original and first repeated measurements is > 1.20, or when the original or repeated measurement is >= 1.45 W/kg, perform a second repeated measurement.
4. If the ratio of largest to smallest SAR for the original, first and second repeated measurements is > 1.20, and the original, first or second repeated measurement is >= 1.5 W/kg, perform a third repeated measurement.

Band	Mode	Test Position	Ch.	Original Measured SAR-1g (W/kg)	1st Repeated SAR-1g (W/kg)	L/S Ratio	2nd Repeated SAR-1g (W/kg)	L/S Ratio	3rd Repeated SAR-1g (W/kg)	L/S Ratio
WLAN5G	802.11a	Top Side	144	1.2	1.16	1.03	N/A	N/A	N/A	N/A
WLAN5G	802.11a	Top Side	153	1.31	1.27	1.03	N/A	N/A	N/A	N/A

4.7.4 Simultaneous Multi-band Transmission Evaluation

1. Simultaneous Tx of the WLAN Main with the WLAN Aux antennas transmitting
   The Section 4.7.2 SAR result is measured with Main and Aux antenna transmitting simultaneously at the specified maximum output power of MIMO operation.
2. Simultaneous Tx of WLAN with BT
   (Case1) BT + WLAN 5GHz MIMO
   The simultaneous transmission SAR value is 1.48 W/kg, which is the sum of highest WLAN 5GHz(11a, 1.31W/kg) + Bluetooth(0.17W/kg) on Main Antenna.
   (Case2) BT + WLAN 2.4GHz MIMO (time sharing)
   Based on the time-sharing scheme described below, BT and 2.4GHz WLAN do not transmit simultaneously. Therefore, it is not required to evaluate the simultaneous transmission SAR of BT and WLAN in this case.
   [WLAN/BT co-existence with time sharing scheme]
   Since BT and WLAN 2.4GHz share the same antenna based on time sharing scheme, WiFi/BT co-existence in 2.4GHz works in this way:
   (1)Time slot_#1: BT transmits on Main Antenna, No WiFi transmit on Main Antenna & Aux Antenna
   (2)Time slot_#2: WLAN 2.4GHz transmits on both Main Antenna and Aux Antenna, No BT transmit
   (3)Repeat (1) Time slot_#1& (2) Time slot_#2 in turn…

Test Engineer：Chienlun Huang, and Hance Chang

5. Calibration of Test Equipment

Equipment	Manufacturer	Model	SN	Cal. Date	Cal. Interval
System Validation Dipole	SPEAG	D2450V2	737	Aug. 17, 2017	1 Year
System Validation Dipole	SPEAG	D5GHzV2	1019	Aug. 23, 2017	1 Year
Dosimetric E-Field Probe	SPEAG	EX3DV4	7375	Dec. 18, 2017	1 Year
Dosimetric E-Field Probe	SPEAG	EX3DV4	3650	Jul. 24, 2017	1 Year
Dosimetric E-Field Probe	SPEAG	EX3DV4	7346	Feb. 28, 2018	1 Year
Data Acquisition Electronics	SPEAG	DAE4	917	Dec. 14, 2017	1 Year
Data Acquisition Electronics	SPEAG	DAE4	1277	Jan. 18, 2018	1 Year
Data Acquisition Electronics	SPEAG	DAE4	679	Mar. 05, 2018	1 Year
Spectrum Analyzer	R&S	FSL6	102006	Mar. 27, 2017	1 Year
				Mar. 23, 2018	
ENA Series Network Analyzer	Agilent	E5071C	MY46214281	Jun. 09, 2017	1 Year
				Jun. 08, 2018	
MXG Analong Signal Generator	Agilent	N5181A	MY50143868	Jul. 10, 2017	1 Year
Vector Signal Generator	Anritsu	MG3710A	6201599977	Mar. 27, 2017	1 Year
				Mar. 16, 2018	
Power Meter	Anritsu	ML2495A	1218009	Jul. 12, 2017	1 Year
Power Sensor	Anritsu	MA2411B	1207252	Jul. 12, 2017	1 Year
Thermometer	YFE	YF-160A	130504591	Mar. 24, 2017	
				Mar. 23, 2018	1 Year
Thermometer	YFE	YF-160A	120702369	Aug. 15, 2017	1 Year
Dielectric Assessment Kit	SPEAG	DAK-3.5	1047	Aug. 15, 2017	1 Year

6. Measurement Uncertainty

Source of Uncertainty	Uncertainty (± %)	Probability Distribution	Divisor	Ci (1g)	Ci (10g)	Standard Uncertainty (± %, 1g)	Standard Uncertainty (± %, 10g)	Vi
Measurement System								
Probe Calibration	6.0	Normal	1	1	1	6.0	6.0	∞
Axial Isotropy	4.7	Rectangular	√3	√0.5	√0.5	1.9	1.9	∞
Hemispherical Isotropy	9.6	Rectangular	√3	√0.5	√0.5	3.9	3.9	∞
Boundary Effect	1.0	Rectangular	√3	1	1	0.6	0.6	∞
Linearity	4.7	Rectangular	√3	1	1	2.7	2.7	∞
Detection Limits	0.25	Rectangular	√3	1	1	0.14	0.14	∞
Probe Modulation Response	3.5	Rectangular	√3	1	1	2.0	2.0	∞
Readout Electronics	0.3	Normal	1	1	1	0.3	0.3	∞
Response Time	0.0	Rectangular	√3	1	1	0.0	0.0	∞
Integration Time	1.7	Rectangular	√3	1	1	1.0	1.0	∞
RF Ambient Conditions – Noise	3.0	Rectangular	√3	1	1	1.7	1.7	∞
RF Ambient Conditions – Reflections	3.0	Rectangular	√3	1	1	1.7	1.7	∞
Probe Positioner Mechanical Tolerance	0.4	Rectangular	√3	1	1	0.2	0.2	∞
Probe Positioning with Respect to Phantom	2.9	Rectangular	√3	1	1	1.7	1.7	∞
Post-processing	2.0	Rectangular	√3	1	1	1.2	1.2	∞
Test Sample Related								
Test Sample Positioning	4.38 / 1.35	Normal	1	1	1	4.4	1.4	29
Device Holder Uncertainty	2.9 / 4.1	Normal	1	1	1	2.9	4.1	11
Power Drift of Measurement	5.0	Rectangular	√3	1	1	2.9	2.9	∞
Power Scaling	0.0	Rectangular	√3	1	1	0.0	0.0	∞
Phantom and Setup								
Phantom Uncertainty (Shape and Thickness Tolerances)	7.2	Rectangular	√3	1	1	4.2	4.2	∞
Liquid Conductivity (Temperature Uncertainty)	3.24	Rectangular	√3	0.78	0.71	1.5	1.3	∞
Liquid Conductivity (Measured)	2.88	Normal	1	0.78	0.71	2.2	2.0	43
Liquid Permittivity (Temperature Uncertainty)	1.13	Rectangular	√3	0.23	0.26	0.2	0.2	∞
Liquid Permittivity (Measured)	2.50	Normal	1	0.23	0.26	0.6	0.7	54
Combined Standard Uncertainty						± 11.8 %	± 11.3 %	
Expanded Uncertainty (K=2)						**± 23.6 %**	**± 22.6 %**	

Body SAR Uncertainty Budget for Frequency Range of 300 MHz to 3 GHz

Source of Uncertainty	Uncertainty (± %)	Probability Distribution	Divisor	Ci (1g)	Ci (10g)	Standard Uncertainty (± %, 1g)	Standard Uncertainty (± %, 10g)	Vi
Measurement System								
Probe Calibration	6.55	Normal	1	1	1	6.55	6.55	∞
Axial Isotropy	4.7	Rectangular	√3	0.7	0.7	1.9	1.9	∞
Hemispherical Isotropy	9.6	Rectangular	√3	0.7	0.7	3.9	3.9	∞
Boundary Effect	2.0	Rectangular	√3	1	1	1.2	1.2	∞
Linearity	4.7	Rectangular	√3	1	1	2.7	2.7	∞
Detection Limits	0.25	Rectangular	√3	1	1	0.14	0.14	∞
Probe Modulation Response	3.5	Rectangular	√3	1	1	2.0	2.0	∞
Readout Electronics	0.3	Normal	1	1	1	0.3	0.3	∞
Response Time	0.0	Rectangular	√3	1	1	0.0	0.0	∞
Integration Time	1.7	Rectangular	√3	1	1	1.0	1.0	∞
RF Ambient Conditions – Noise	3.0	Rectangular	√3	1	1	1.7	1.7	∞
RF Ambient Conditions – Reflections	3.0	Rectangular	√3	1	1	1.7	1.7	∞
Probe Positioner Mechanical Tolerance	0.4	Rectangular	√3	1	1	0.2	0.2	∞
Probe Positioning with Respect to Phantom	6.7	Rectangular	√3	1	1	3.9	3.9	∞
Post-processing	4.0	Rectangular	√3	1	1	2.3	2.3	∞
Test Sample Related								
Test Sample Positioning	4.38 / 1.35	Normal	1	1	1	4.4	1.4	29
Device Holder Uncertainty	2.9 / 4.1	Normal	1	1	1	2.9	4.1	11
Power Drift of Measurement	5.0	Rectangular	√3	1	1	2.9	2.9	∞
Power Scaling	0.0	Rectangular	√3	1	1	0.0	0.0	∞
Phantom and Setup								
Phantom Uncertainty (Shape and Thickness Tolerances)	7.6	Rectangular	√3	1	1	4.4	4.4	∞
Liquid Conductivity (Temperature Uncertainty)	3.24	Rectangular	√3	0.78	0.71	1.5	1.3	∞
Liquid Conductivity (Measured)	2.88	Normal	1	0.78	0.71	2.2	2.0	43
Liquid Permittivity (Temperature Uncertainty)	1.13	Rectangular	√3	0.23	0.26	0.2	0.2	∞
Liquid Permittivity (Measured)	2.50	Normal	1	0.23	0.26	0.6	0.7	54
Combined Standard Uncertainty						± 12.8 %	± 12.4 %	
Expanded Uncertainty (K=2)						**± 25.6 %**	**± 24.8 %**	

Body SAR Uncertainty Budget for Frequency Range of 3 GHz to 6 GHz

7. Information on the Testing Laboratories

We, Bureau Veritas Consumer Products Services (H.K.) Ltd., Taoyuan Branch, were founded in 1988 to provide our best service in EMC, Radio, Telecom and Safety consultation. Our laboratories are accredited and approved according to ISO/IEC 17025.

If you have any comments, please feel free to contact us at the following:

Taiwan HwaYa EMC/RF/Safety/Telecom Lab:
Add: No. 19, Hwa Ya 2nd Rd, Wen Hwa Vil., Kwei Shan Hsiang, Taoyuan Hsien 333, Taiwan, R.O.C.
Tel: 886-3-318-3232
Fax: 886-3-327-0892

Taiwan LinKo EMC/RF Lab:
Add: No. 47-2, 14th Ling, Chia Pau Vil., Linkou Dist., New Taipei City 244, Taiwan, R.O.C.
Tel: 886-2-2605-2180
Fax: 886-2-2605-1924

Taiwan HsinChu EMC/RF Lab:
Add: E-2, No.1, Li Hsin 1st Road, Hsinchu Science Park, Hsinchu City 30078, Taiwan, R.O.C.
Tel: 886-3-593-5343
Fax: 886-3-593-5342

Email: service.adt@tw.bureauveritas.com
Web Site: www.bureauveritas-adt.com

The road map of all our labs can be found in our web site also.

---END---

Appendix A. SAR Plots of System Verification

The plots for system verification with largest deviation for each SAR system combination are shown as follows.

System Check_B2450_180627

DUT: Dipole 2450 MHz; Type: D2450V2; SN: 737

Communication System: CW; Frequency: 2450 MHz;Duty Cycle: 1:1
Medium: B19T27N1_0627 Medium parameters used: f = 2450 MHz; σ = 2.036 S/m; ε_r = 53.942; ρ = 1000 kg/m^3
Ambient Temperature：23.4 ℃ ; Liquid Temperature：23.2 ℃

DASY5 Configuration:
- Probe: EX3DV4 - SN7346; ConvF(7.78, 7.78, 7.78); Calibrated: 2018/02/28
- Sensor-Surface: 1.4mm (Mechanical Surface Detection)
- Electronics: DAE4 Sn679; Calibrated: 2018/03/05
- Phantom: ELI Phantom_1039; Type: QDOVA;
- Measurement SW: DASY52, Version 52.10 (1); SEMCAD X Version 14.6.11 (7439)

Pin=250mW/Area Scan (81x81x1): Interpolated grid: dx=1.200 mm, dy=1.200 mm
Maximum value of SAR (interpolated) = 17.8 W/kg

Pin=250mW/Zoom Scan (7x7x7)/Cube 0: Measurement grid: dx=5mm, dy=5mm, dz=5mm
Reference Value = 95.03 V/m; Power Drift = -0.18 dB
Peak SAR (extrapolated) = 24.1 W/kg
SAR(1 g) = 11.7 W/kg; SAR(10 g) = 5.38 W/kg
Maximum value of SAR (measured) = 17.9 W/kg

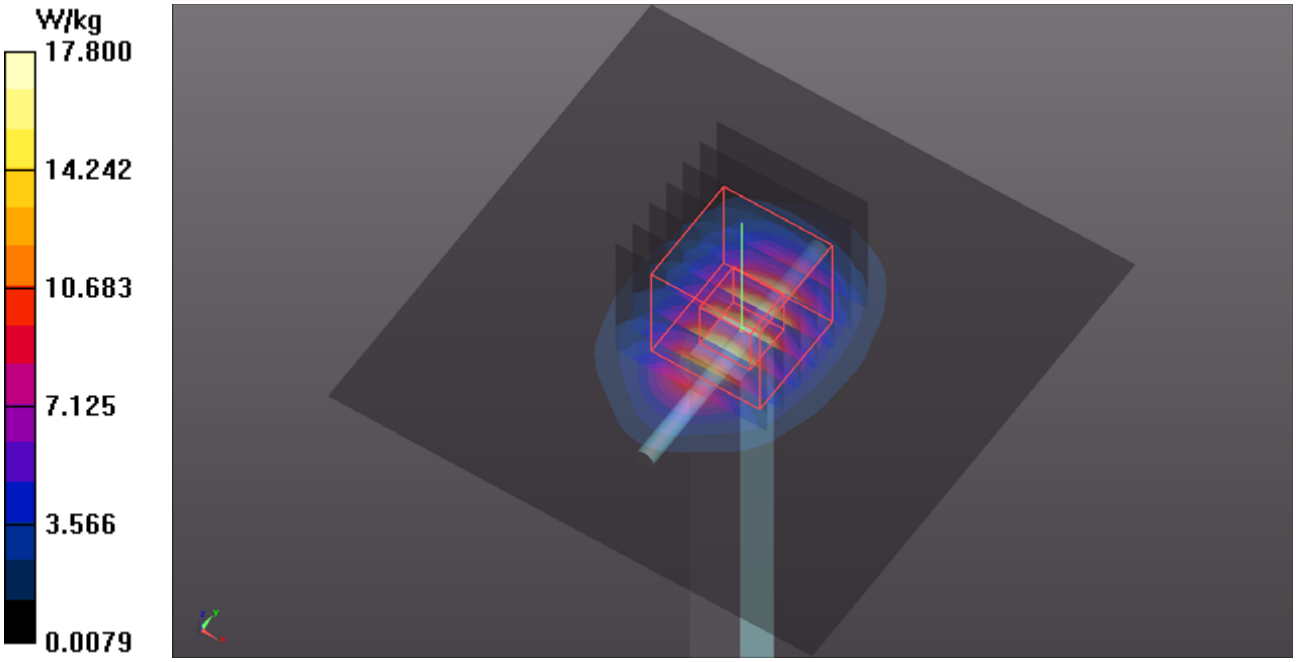

System Check_B5250_180625

DUT: Dipole 5 GHz; Type: D5GHzV2; SN: 1019

Communication System: CW; Frequency: 5250 MHz;Duty Cycle: 1:1
Medium: B34T60N1_0625 Medium parameters used: f = 5250 MHz; σ = 5.118 S/m; ε_r = 51.052; ρ = 1000 kg/m^3
Ambient Temperature：23.6 ℃ ; Liquid Temperature：23.3 ℃

DASY5 Configuration:
- Probe: EX3DV4 - SN3650; ConvF(5.28, 5.28, 5.28); Calibrated: 2017/07/24
- Sensor-Surface: 1.4mm (Mechanical Surface Detection)
- Electronics: DAE4 Sn1277; Calibrated: 2018/01/18
- Phantom: ELI Phantom_1206; Type: QDOVA;
- Measurement SW: DASY52, Version 52.10 (1); SEMCAD X Version 14.6.11 (7439)

Pin=100mW/Area Scan (91x91x1): Interpolated grid: dx=1.000 mm, dy=1.000 mm
Maximum value of SAR (interpolated) = 16.9 W/kg

Pin=100mW/Zoom Scan (7x7x12)/Cube 0: Measurement grid: dx=4mm, dy=4mm, dz=2mm
Reference Value = 57.34 V/m; Power Drift = 0.06 dB
Peak SAR (extrapolated) = 31.7 W/kg
SAR(1 g) = 7.36 W/kg; SAR(10 g) = 2.08 W/kg
Maximum value of SAR (measured) = 18.6 W/kg

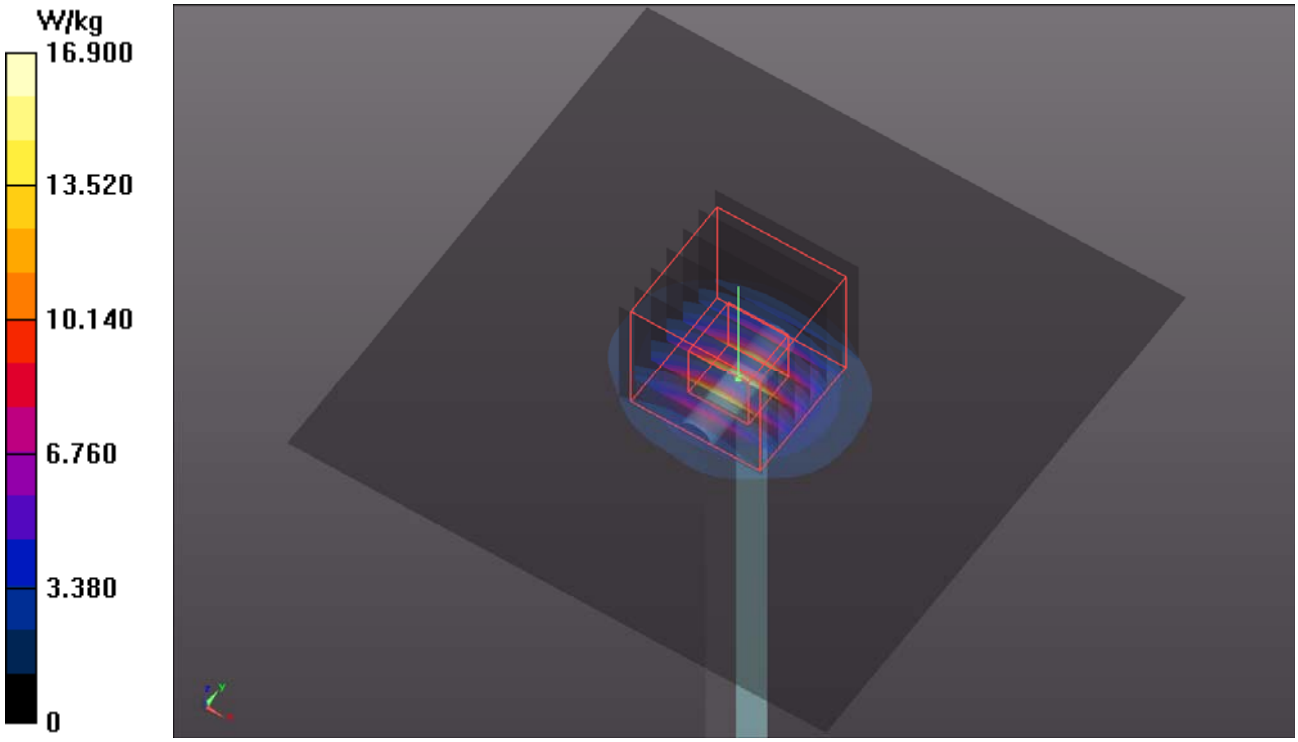

Test Laboratory: Bureau Veritas ADT SAR/HAC Testing Lab Date: 2018/06/25

System Check_B5600_180625

DUT: Dipole 5 GHz; Type: D5GHzV2; SN: 1019

Communication System: CW; Frequency: 5600 MHz;Duty Cycle: 1:1
Medium: B34T60N3_0625 Medium parameters used: f = 5600 MHz; σ = 5.94 S/m; ε_r = 47.006; ρ = 1000 kg/m^3
Ambient Temperature：23.6 ℃ ; Liquid Temperature：23.3 ℃

DASY5 Configuration:
- Probe: EX3DV4 - SN3650; ConvF(4.29, 4.29, 4.29); Calibrated: 2017/07/24
- Sensor-Surface: 1.4mm (Mechanical Surface Detection)
- Electronics: DAE4 Sn1277; Calibrated: 2018/01/18
- Phantom: ELI Phantom_1206; Type: QDOVA;
- Measurement SW: DASY52, Version 52.10 (1); SEMCAD X Version 14.6.11 (7439)

Pin=100mW/Area Scan (91x91x1): Interpolated grid: dx=1.000 mm, dy=1.000 mm
Maximum value of SAR (interpolated) = 18.5 W/kg

Pin=100mW/Zoom Scan (7x7x12)/Cube 0: Measurement grid: dx=4mm, dy=4mm, dz=2mm
Reference Value = 58.52 V/m; Power Drift = -0.08 dB
Peak SAR (extrapolated) = 33.8 W/kg
SAR(1 g) = 7.86 W/kg; SAR(10 g) = 2.22 W/kg
Maximum value of SAR (measured) = 20.4 W/kg

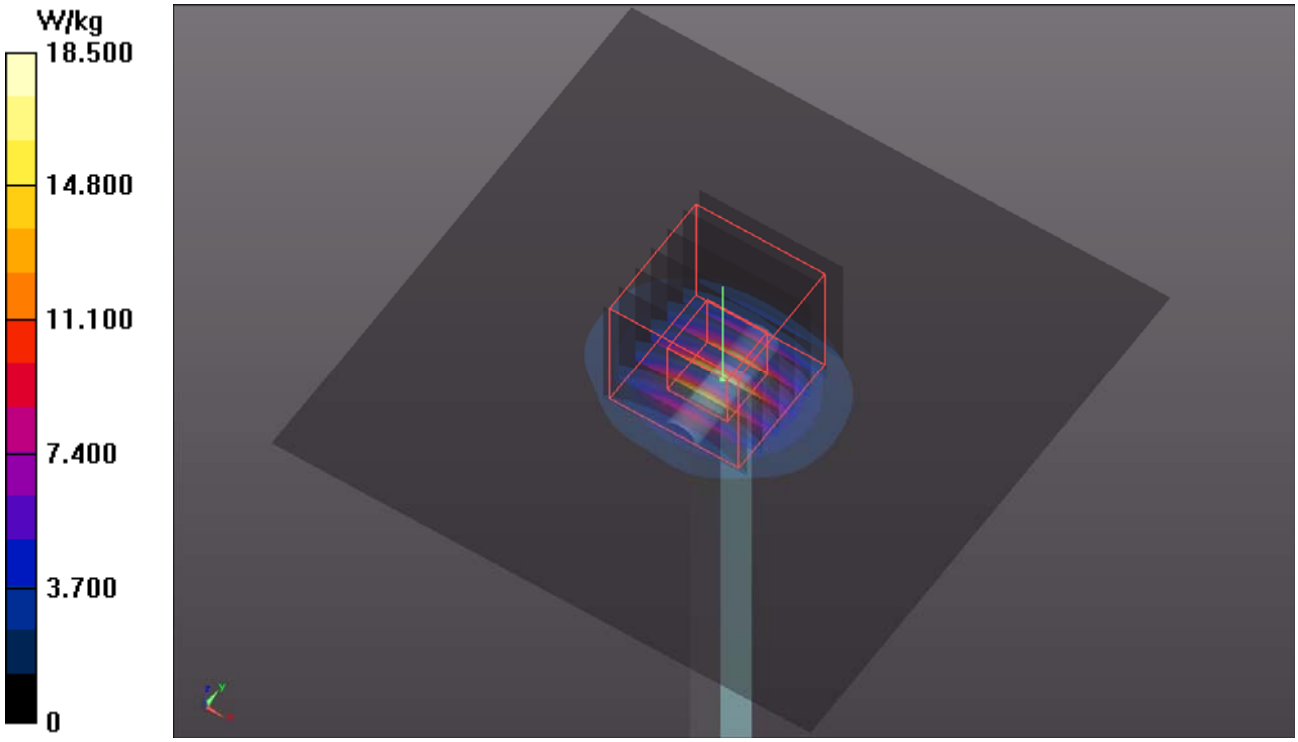

System Check_B5800_180523

DUT: Dipole 5 GHz; Type: D5GHzV2; SN: 1019

Communication System: CW; Frequency: 5800 MHz;Duty Cycle: 1:1
Medium: B34T60N1_0523 Medium parameters used: f = 5800 MHz; σ = 6.117 S/m; ε_r = 46.575; ρ = 1000 kg/m^3
Ambient Temperature：23.8 ℃ ; Liquid Temperature：23.2 ℃

DASY5 Configuration:
- Probe: EX3DV4 - SN3650; ConvF(4.61, 4.61, 4.61); Calibrated: 2017/07/24;
- Sensor-Surface: 1.4mm (Mechanical Surface Detection)
- Electronics: DAE4 Sn1277; Calibrated: 2018/01/18
- Phantom: ELI Phantom_1206; Type: QDOVA;
- Measurement SW: DASY52, Version 52.10 (1); SEMCAD X Version 14.6.11 (7439)

Pin=100mW/Area Scan (91x91x1): Interpolated grid: dx=1.000 mm, dy=1.000 mm
Maximum value of SAR (interpolated) = 15.3 W/kg

Pin=100mW/Zoom Scan (7x7x12)/Cube 0: Measurement grid: dx=4mm, dy=4mm, dz=2mm
Reference Value = 56.98 V/m; Power Drift = -0.02 dB
Peak SAR (extrapolated) = 32.5 W/kg
SAR(1 g) = 7.57 W/kg; SAR(10 g) = 2.13 W/kg
Maximum value of SAR (measured) = 16.3 W/kg

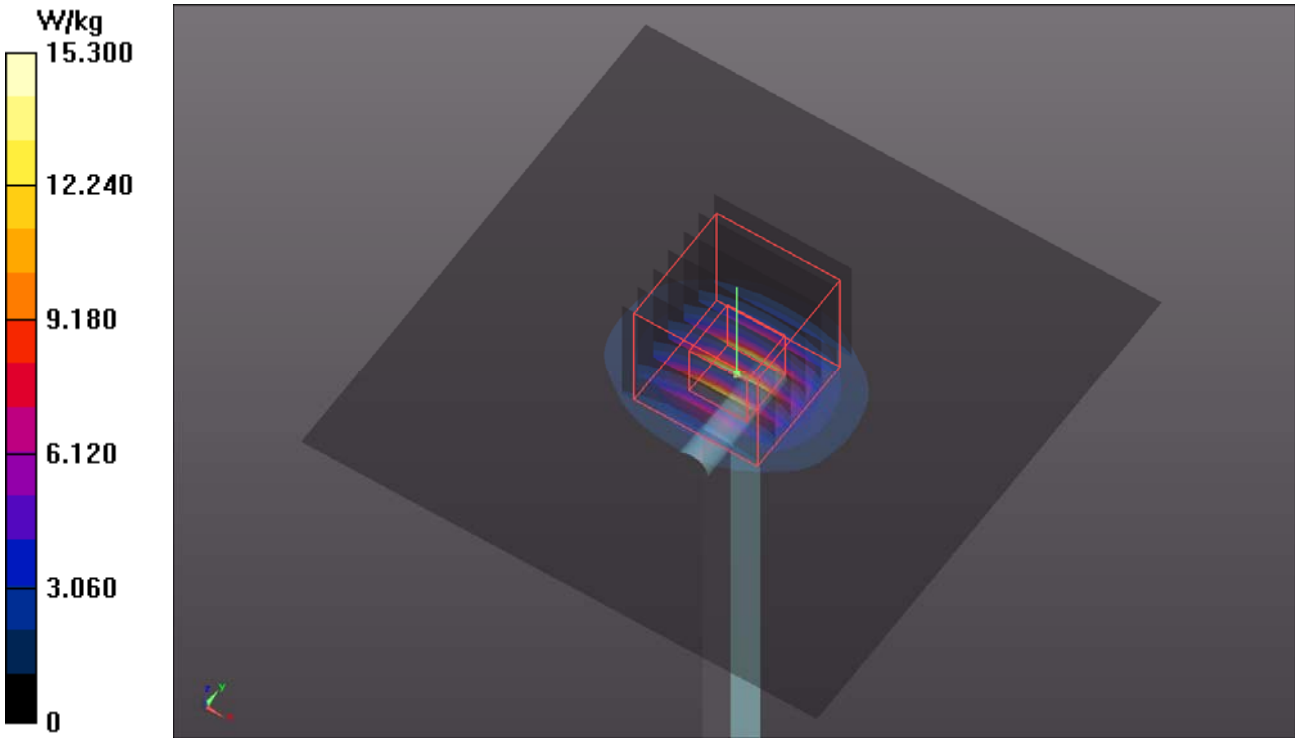

Appendix B. SAR Plots of SAR Measurement

The SAR plots for highest measured SAR in each exposure configuration, wireless mode and frequency band combination, and measured SAR > 1.5 W/kg are shown as follows.

P01 WLAN2.4G_802.11n HT40_Rear Face_0mm_Ch3_MIMO

DUT: 171110C21

Communication System: WLAN_2.4G; Frequency: 2412 MHz;Duty Cycle: 1:1
Medium: B19T27N1_0627 Medium parameters used: f = 2412 MHz; σ = 1.991 S/m; ε_r = 52.066; ρ = 1000 kg/m^3
Ambient Temperature：23.4 ℃ ; Liquid Temperature：23.2 ℃

DASY5 Configuration:
- Probe: EX3DV4 - SN7346; ConvF(7.78, 7.78, 7.78); Calibrated: 2018/02/28
- Sensor-Surface: 1.4mm (Mechanical Surface Detection)
- Electronics: DAE4 Sn679; Calibrated: 2018/03/05
- Phantom: ELI Phantom_1039; Type: QDOVA;
- Measurement SW: DASY52, Version 52.10 (1); SEMCAD X Version 14.6.11 (7439)

- Area Scan (111x251x1): Interpolated grid: dx=1.200 mm, dy=1.200 mm
Maximum value of SAR (interpolated) = 0.821 W/kg

- Zoom Scan (5x5x7)/Cube 0: Measurement grid: dx=8mm, dy=8mm, dz=5mm
Reference Value = 19.16 V/m; Power Drift = -0.01 dB
Peak SAR (extrapolated) = 1.58 W/kg
SAR(1 g) = 0.690 W/kg; SAR(10 g) = 0.340 W/kg
Maximum value of SAR (measured) = 1.15 W/kg

- Zoom Scan (5x5x7)/Cube 1: Measurement grid: dx=8mm, dy=8mm, dz=5mm
Reference Value = 19.16 V/m; Power Drift = -0.01 dB
Peak SAR (extrapolated) = 0.977 W/kg
SAR(1 g) = 0.476 W/kg; SAR(10 g) = 0.217 W/kg
Maximum value of SAR (measured) = 0.730 W/kg

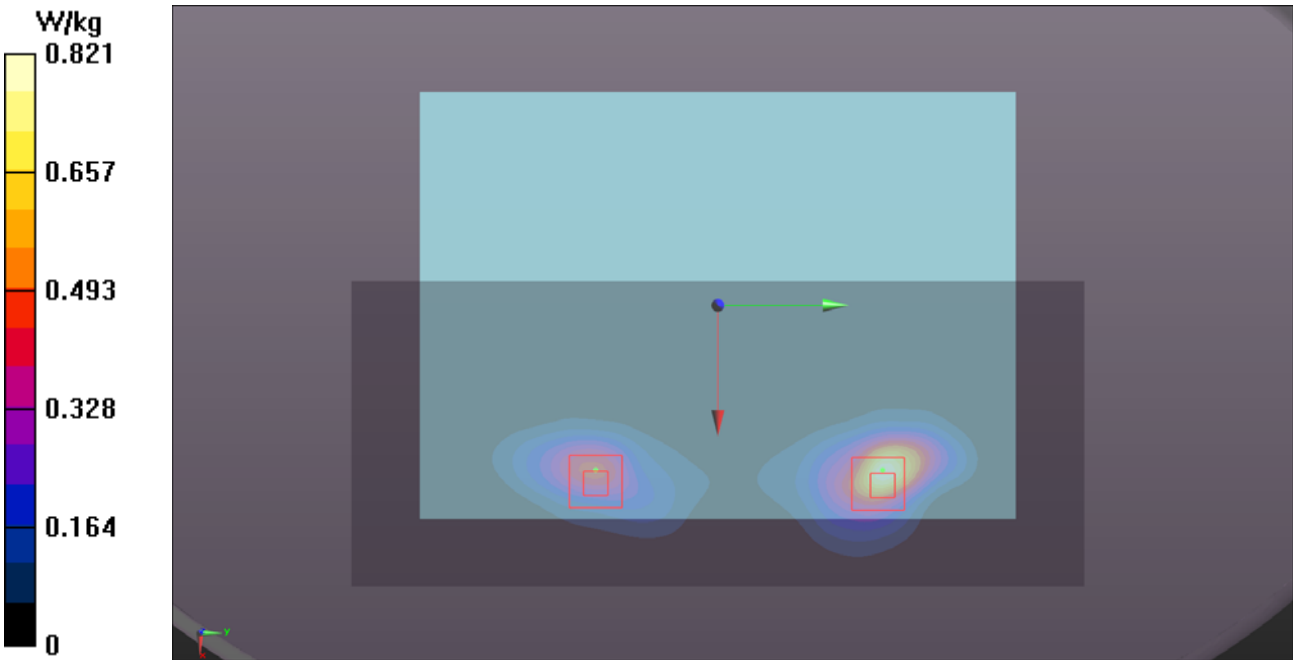

P02 WLAN5G_802.11a_Top Side_0cm_Ch64_MIMO

DUT: 171110C21

Communication System: WLAN_5G; Frequency: 5320 MHz;Duty Cycle: 1:1
Medium: B34T60N1_0625 Medium parameters used: f = 5320 MHz; σ = 5.207 S/m; ε_r = 50.921; ρ = 1000 kg/m^3
Ambient Temperature：23.6 ℃ ; Liquid Temperature：23.3 ℃

DASY5 Configuration:
- Probe: EX3DV4 - SN3650; ConvF(5.28, 5.28, 5.28); Calibrated: 2017/07/24
- Sensor-Surface: 1.4mm (Mechanical Surface Detection)
- Electronics: DAE4 Sn1277; Calibrated: 2018/01/18
- Phantom: ELI Phantom_1206; Type: QDOVA;
- Measurement SW: DASY52, Version 52.10 (1); SEMCAD X Version 14.6.11 (7439)

- Area Scan (81x281x1): Interpolated grid: dx=1.000 mm, dy=1.000 mm
Maximum value of SAR (interpolated) = 2.55 W/kg

- Zoom Scan (6x6x12)/Cube 1: Measurement grid: dx=5mm, dy=5mm, dz=2mm
Reference Value = 20.84 V/m; Power Drift = -0.12 dB
Peak SAR (extrapolated) = 4.43 W/kg
SAR(1 g) = 0.674 W/kg; SAR(10 g) = 0.266 W/kg
Maximum value of SAR (measured) = 2.37 W/kg

- Zoom Scan (6x6x12)/Cube 0: Measurement grid: dx=5mm, dy=5mm, dz=2mm
Reference Value = 20.84 V/m; Power Drift = -0.12 dB
Peak SAR (extrapolated) = 3.44 W/kg
SAR(1 g) = 0.584 W/kg; SAR(10 g) = 0.148 W/kg
Maximum value of SAR (measured) = 1.96 W/kg

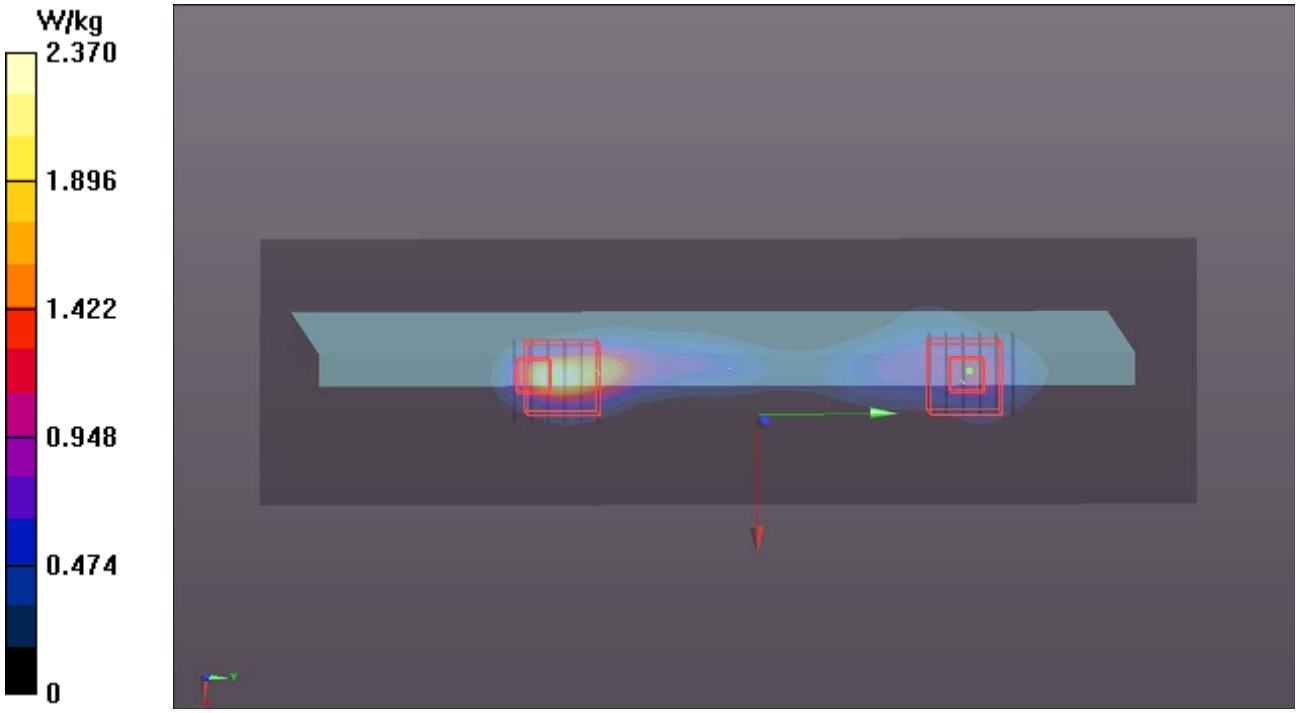

P03 WLAN5G_802.11a_Top Side_0cm_Ch144_MIMO

DUT: 171110C21

Communication System: WLAN_5G; Frequency: 5720 MHz;Duty Cycle: 1:1
Medium: B34T60N3_0625 Medium parameters used: f = 5720 MHz; σ = 6.101 S/m; ε_r = 46.778; ρ = 1000 kg/m^3
Ambient Temperature：23.6 ℃ ; Liquid Temperature：23.3 ℃

DASY5 Configuration:
- Probe: EX3DV4 - SN3650; ConvF(4.61, 4.61, 4.61); Calibrated: 2017/07/24
- Sensor-Surface: 1.4mm (Mechanical Surface Detection)
- Electronics: DAE4 Sn1277; Calibrated: 2018/01/18
- Phantom: ELI Phantom_1206; Type: QDOVA;
- Measurement SW: DASY52, Version 52.10 (1); SEMCAD X Version 14.6.11 (7439)

- Area Scan (81x281x1): Interpolated grid: dx=1.000 mm, dy=1.000 mm
Maximum value of SAR (interpolated) = 3.29 W/kg

- Zoom Scan (6x6x12)/Cube 0: Measurement grid: dx=5mm, dy=5mm, dz=2mm
Reference Value = 25.04 V/m; Power Drift = -0.15 dB
Peak SAR (extrapolated) = 5.65 W/kg
SAR(1 g) = 1.2 W/kg; SAR(10 g) = 0.295 W/kg
Maximum value of SAR (measured) = 3.29 W/kg

- Zoom Scan (6x6x12)/Cube 1: Measurement grid: dx=5mm, dy=5mm, dz=2mm
Reference Value = 25.04 V/m; Power Drift = -0.15 dB
Peak SAR (extrapolated) = 4.03 W/kg
SAR(1 g) = 0.915 W/kg; SAR(10 g) = 0.275 W/kg
Maximum value of SAR (measured) = 2.27 W/kg

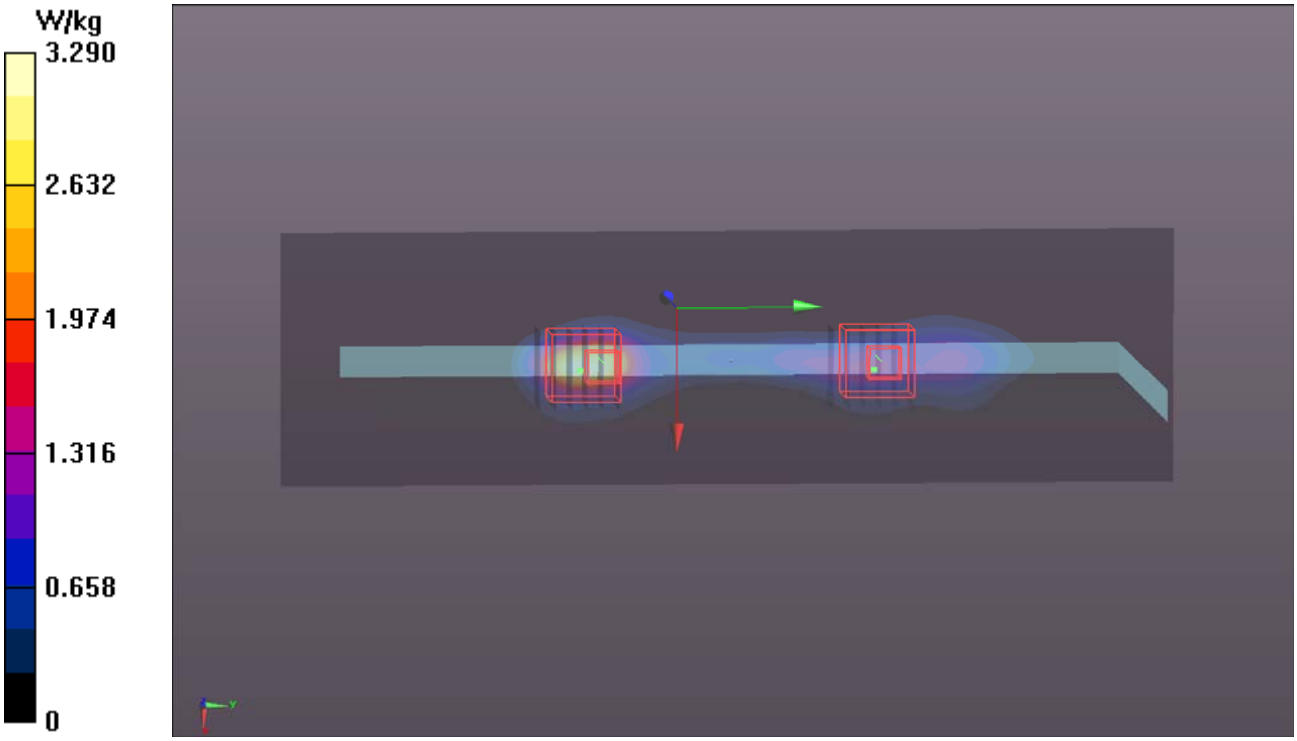

P04 WLAN5G_802.11a_Top Side_0cm_Ch153_MIMO

DUT: 171110C21

Communication System: WLAN_5G; Frequency: 5765 MHz;Duty Cycle: 1:1
Medium: B34T60N3_0625 Medium parameters used: f = 5765 MHz; σ = 6.175 S/m; ε_r = 46.639; ρ = 1000 kg/m^3
Ambient Temperature：23.6 ℃ ; Liquid Temperature：23.3 ℃

DASY5 Configuration:
- Probe: EX3DV4 - SN3650; ConvF(4.61, 4.61, 4.61); Calibrated: 2017/07/24
- Sensor-Surface: 1.4mm (Mechanical Surface Detection)
- Electronics: DAE4 Sn1277; Calibrated: 2018/01/18
- Phantom: ELI Phantom_1206; Type: QDOVA;
- Measurement SW: DASY52, Version 52.10 (1); SEMCAD X Version 14.6.11 (7439)

- Area Scan (81x281x1): Interpolated grid: dx=1.000 mm, dy=1.000 mm
Maximum value of SAR (interpolated) = 3.79 W/kg

- Zoom Scan (6x6x12)/Cube 0: Measurement grid: dx=5mm, dy=5mm, dz=2mm
Reference Value = 27.99 V/m; Power Drift = -0.08 dB
Peak SAR (extrapolated) = 6.35 W/kg
SAR(1 g) = 1.31 W/kg; SAR(10 g) = 0.345 W/kg
Maximum value of SAR (measured) = 3.34 W/kg

- Zoom Scan (6x6x12)/Cube 1: Measurement grid: dx=5mm, dy=5mm, dz=2mm
Reference Value = 27.99 V/m; Power Drift = -0.08 dB
Peak SAR (extrapolated) = 4.09 W/kg
SAR(1 g) = 0.927 W/kg; SAR(10 g) = 0.281 W/kg
Maximum value of SAR (measured) = 2.21 W/kg

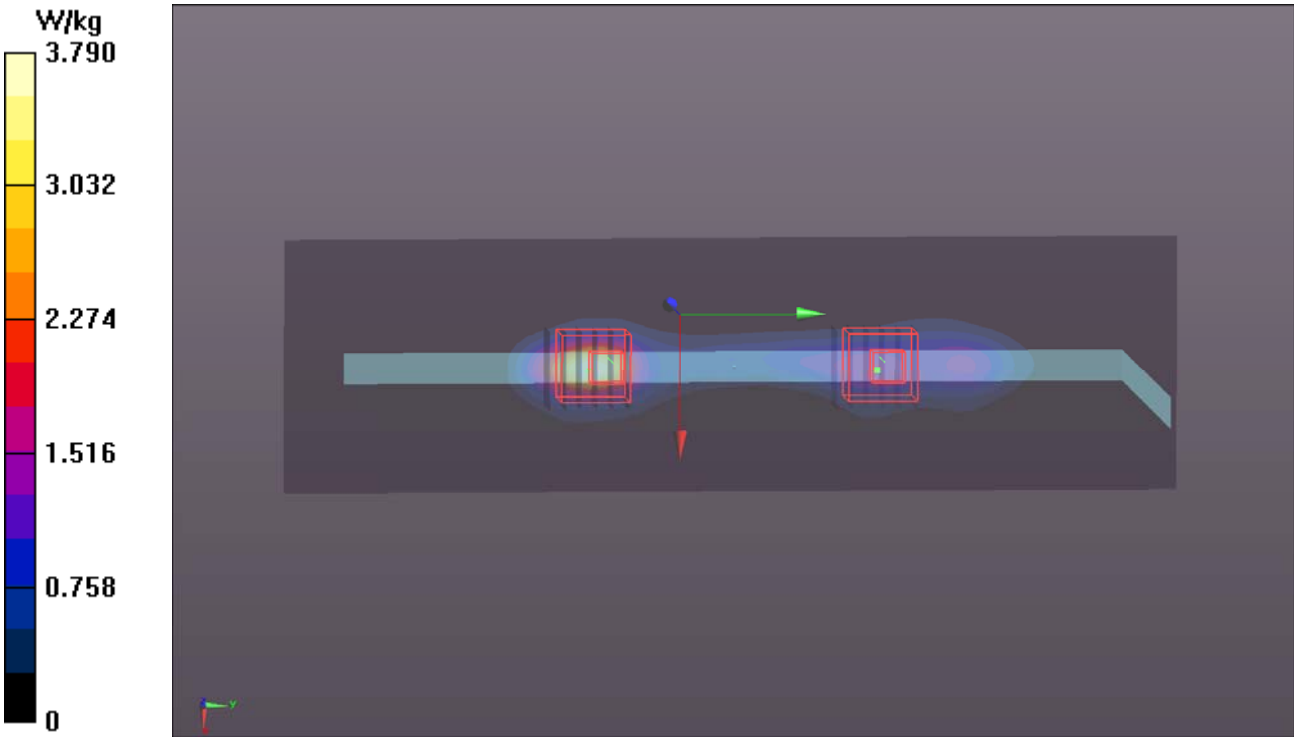

P05 BT_BR_EDR_Rear Face_0cm_Ch39_Main

DUT: 171110C21

Communication System: BT; Frequency: 2441 MHz;Duty Cycle: 1:1
Medium: B19T27N1_0302 Medium parameters used: f = 2441 MHz; σ = 2.013 S/m; ε_r = 51.665; ρ = 1000 kg/m^3
Ambient Temperature：23.5 ℃ ; Liquid Temperature：23.2 ℃

DASY5 Configuration:
- Probe: EX3DV4 - SN7375; ConvF(7.83, 7.83, 7.83); Calibrated: 2017/12/18;
- Sensor-Surface: 1.4mm (Mechanical Surface Detection)
- Electronics: DAE4 Sn917; Calibrated: 2017/12/14
- Phantom: ELI Phantom_1204; Type: QDOVA;
- Measurement SW: DASY52, Version 52.8 (8); SEMCAD X Version 14.6.10 (7373)

- Area Scan (191x241x1): Interpolated grid: dx=1.200 mm, dy=1.200 mm
Maximum value of SAR (interpolated) = 0.294 W/kg

- Zoom Scan (5x5x7)/Cube 0: Measurement grid: dx=8mm, dy=8mm, dz=5mm
Reference Value = 11.71 V/m; Power Drift = -0.10 dB
Peak SAR (extrapolated) = 0.356 W/kg
SAR(1 g) = 0.168 W/kg; SAR(10 g) = 0.082 W/kg
Maximum value of SAR (measured) = 0.245 W/kg

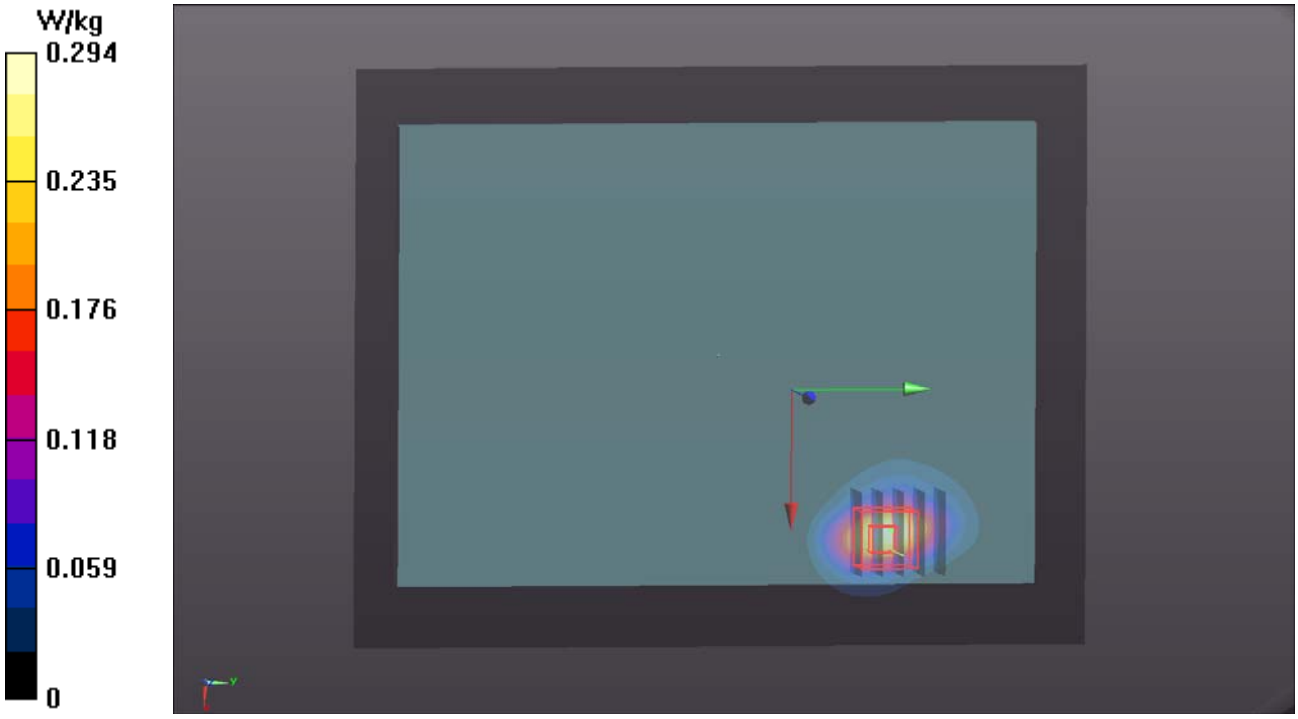

Appendix C. Calibration Certificate for Probe and Dipole

The SPEAG calibration certificates are shown as follows.

Appendix D. Photographs of EUT and Setup