SAR TEST REPORT

for

MODEL NO. 1832
FCC ID: C3K1832

Test Report No. S-TR118-FCCSAR-2
Issue Date: Sep 29, 2017

FCC CFR 47 PART 2.1093
IEEE 1528-2013

Prepared by
Microsoft EMC Laboratory
17760 NE 67th Ct,
Redmond WA, 98052, U.S.A.
425-421-9799
sajose@microsoft.com

ACCREDITED
TESTING CERT #3472.01

Report V4.1

1 Record of Revisions

Revision	Date	Section	Page(s)	Summary of Changes	Author/Revised By:
1.0	09/22/2017	All	All	First Version	Z. Gray
2.0	09/29/2017	4	8	Split max simultaneous reported SAR values by equipment class.	Z. Gray
		6	11	Corrected 2.4 GHz WLAN frequencies.	
		9.1	30-31	Harmonized antenna labeling.	
		9.2	32	Added explanation of power state vs. device configuration.	
		Setup Photos	3	Added illustration of antenna separation distance for laptop.	

Test Report Attestation

Microsoft Corporation
Model: 1832

Applicable Standards

Specification	Test Result
FCC CFR 47 PART 2.1093 IEEE 1528-2013	Pass

Microsoft EMC Laboratory attests that the product model identified in this report has been tested to and meets the requirements identified in the above standards. The test results in this report solely pertains to the specific sample tested, under the conditions and operating modes as provided by the customer.

This test report replaces the previously issued report #S-TR118-FCCSAR-1 issued by Microsoft EMC Labs.

This report shall not be used to claim product certification, approval, or endorsement by A2LA or any agency of any Government. Reproduction, duplication or publication of extracts from this test report is prohibited and requires prior written approval of Microsoft EMC Laboratory.

Written By: Zack Gray
SAR Test Lead

Reviewed/ Issued By: Sajay Jose
EMC/RF Compliance Lab Manager

Table of Contents

1 Record of Revisions 2
2 Deviations from Standard 7
3 Facilities and Accreditation 7
3.1 TEST FACILITY 7
3.2 ACCREDITATIONS 7
3.3 Test Equipment 7
4 Highest Reported SAR Values 8
4.1 SAR Limits 8
5 Test Equipment List 9
6 Product Description 11
6.1 TEST CONFIGURATIONS 12
6.2 ENVIRONMENTAL CONDITIONS 12
6.3 EQUIPMENT MODIFICATIONS 12
6.4 EQUIPMENT UNDER TEST 12
6.4.1 Accessory Test Equipment 12
6.5 Supported Air Interfaces and Transmission Configurations 13
6.5.1 Supported Air Interfaces 13
6.5.2 Transmission Configurations 13
7 Test Methodology 14
8 Conducted RF Average Output Power Measurements 15
8.1 Bluetooth Conducted Output Power Measurements 15
8.2 Bluetooth LE Conducted Output Power Measurements 15
8.3 WLAN Power Measurement Requirements 16
8.4 Initial Test Configuration for OFDM Configurations 16
8.5 WLAN 2.4 GHz Conducted Output Power Measurements – High Power 17
8.6 WLAN 2.4 GHz Conducted Output Power Measurements – Reduced Power 18
8.7 WLAN 5 GHz Conducted Output Power Measurements 19
8.7.1 5.2 GHz Conducted Measurements (U-NII-1) – High Power 19
8.7.2 5.2 GHz Conducted Measurements (U-NII-1) – Reduced Power 20
8.7.3 5.3 GHz Conducted Measurements (U-NII-2A) – High Power 21
8.7.4 5.3 GHz Conducted Measurements (U-NII-2A) – Reduced Power 22
8.7.5 5.6 GHz Conducted Measurements (U-NII-2C) – High Power 23

8.7.6 5.6 GHz Conducted Measurements (U-NII-2C) – High Power Continued.....24
8.7.7 5.6 GHz Conducted Measurements (U-NII-2C) – Reduced Power.....25
8.7.8 5.6 GHz Conducted Measurements (U-NII-2C) – Reduced Power Continued.....26
8.7.9 5.8 GHz Conducted Measurements (U-NII-3) – High Power 27
8.7.10 5.8 GHz Conducted Measurements (U-NII-3) – Reduced Power 28
9 Test Configurations.....29
9.1 Evaluation of Required Test Configurations 30
9.1.1 SAR Test Exclusion Evaluation for antenna-user separation distances less than 50mm 30
9.1.2 SAR Test Exclusion Evaluation for antenna-user separation distances greater than 50mm 31
9.2 Test Positions 32
9.2.1 Test Positions without Keyboard.....32
9.2.2 Additional Test Positions with Keyboard Attached 32
9.2.3 Laptop Configuration.....32
10 SAR Test Procedures.....33
11 SAR Test Results 35
11.1 General SAR Testing Notes.....35
11.2 WLAN 2.4 GHz SAR Testing Notes 35
11.2.1 WLAN 2.4 GHz Main Antenna (Chain B) SAR Test Results.....36
11.2.2 WLAN 2.4 GHz MIMO Antenna (Chain A) SAR Test Results.....36
11.3 WLAN 5 GHz SAR Testing Notes 37
11.3.1 WLAN 5.2 GHz Main Antenna (Chain B) SAR Test Results.....38
11.3.2 WLAN 5.2 GHz MIMO Antenna (Chain A) SAR Test Results.....38
11.3.3 WLAN 5.3 GHz SAR Test Results 38
11.3.4 WLAN 5.6 GHz Main Antenna (Chain B) SAR Test Results.....39
11.3.5 WLAN 5.6 GHz MIMO Antenna (Chain A) SAR Test Results.....39
11.3.6 WLAN 5.8 GHz Main Antenna (Chain B) SAR Test Results.....40
11.3.7 WLAN 5.8 GHz MIMO Antenna (Chain A) SAR Test Results.....40
11.4 Bluetooth SAR Test Results.....40
12 Repeated SAR Measurements 41
12.1 SAR Variability Repeat Measurements 41
13 Simultaneous Transmission Evaluation 42
13.1 Important Standalone SAR values for Simultaneous Transmission Evaluation 43

13.2 Illustration of Peak Locations Required for SPLSR Analysis 44
13.2.1 Top 0mm / Ant B 802.11b Ch. 11 / Ant A 802.11b Ch. 11 44
13.2.2 Top 0mm with Keyboard / Ant B 802.11b Ch. 11 / Ant A 802.11b Ch. 11.....44
13.2.3 Top 0mm / Ant B 802.11n HT40 Ch. 46 / Ant A 802.11n HT40 Ch. 46.....44
13.2.1 Top 0mm w/ Keyboard / Ant B 802.11n HT40 Ch. 46 / Ant A 802.11n HT40 Ch. 46 45
13.3 Estimated Standalone SAR for Simultaneous Transmission Evaluation.....46
13.4 Simultaneous Transmission Evaluation Results.....47
13.4.1 WLAN (Antenna B) + WLAN (Antenna A) Simultaneous Transmission Analysis..47
13.4.2 Bluetooth (Antenna B) + WLAN (Antenna A) Simultaneous Transmission Analysis 48
14 SAR System Verification 49
14.1 SAR System Verification Results 50
15 Tissue-Simulating Liquid Verification 51
15.1 Tissue-Simulating Liquid Ingredients and Maintenance 52
15.2 Tissue-Simulating Liquid Measurements.....53
16 System Specification 54
16.1 SPEAG DASY5 SYSTEM 54
17 Measurement Uncertainty 55
18 Appendices 56

2 Deviations from Standard

None.

3 Facilities and Accreditation

3.1 TEST FACILITY

All test facilities used to collect the test data are located at Microsoft EMC Laboratory: 17760 NE 67th Ct, Redmond, WA, 98052, USA.

3.2 ACCREDITATIONS

The lab is established and follows procedures as outlined in IEC/ISO 17025 and A2LA accreditation requirements.

A2LA Accredited Testing Certificate Number: 3472.01
Expiration Date: Aug 31, 2019

3.3 Test Equipment

The site and related equipment are constructed in conformance with the requirements of IEEE 1528-2013 and other equivalent applicable standards.
The calibrations of the measuring instruments, including any accessories that may affect such calibration, are checked frequently to assure their accuracy. Adjustments are made and correction factors are applied in accordance with instructions contained in the user manual for the measuring equipment.

4 Highest Reported SAR Values

Exposure Condition	Equipment Class	Mode of Operation	Test Position	1-g Reported SAR (W/kg)
Body Exposure	DTS	802.11b	Top Edge 0mm	1.19
	NII	802.11a	Top Edge 0mm	1.38
	DSS	Bluetooth 1-DH5	Top Edge 0mm	0.40
	DTS	Simultaneous	Top Edge 0mm	1.56
	NII	Simultaneous	Top Edge 0mm	1.55
	DSS	Simultaneous	Top Edge 0mm	1.56

Reported SAR Values are obtained by scaling the measured SAR values up to the maximum allowable output power for each configuration using the following equation:

$$SAR = MEASURED * 10^{\frac{(PMAX-\ )}{10}}$$

where

SAR = Reported SAR (W/kg)
MEASURED = Measured SAR (W/kg)
PMAX = Maximum Conducted Average Output Power (dBm)
P = Measured Conducted Average Output Power (dBm)

4.1 SAR Limits

The following are the relevant SAR limits for FCC and IC based on the recommendations of ANSI C95.1-1992:

Exposure Condition	Limit (W/kg)
Localized Body SAR	1.6 (1-g cube)

5 Test Equipment List

Manufacturer	Description	Model	SN	Identifier	Cal. Due	Cal. Cycle
Agilent	Signal Generator	N5181A	MY50144778	SAR-040	4/27/2018	1 yr
Agilent	Signal Generator	N5181A	MY50144791	SAR-051	12/21/2017	1 yr
PRANA	Power Amplifier + Directional Coupler	TU16	1305-1353	SAR-045	N/A	N/A
PRANA	Power Amplifier + Directional Coupler	TU16	1305-1352	SAR-054	N/A	N/A
PRANA	Power Amplifier + Directional Coupler	UX15	1305-1354	SAR-046	N/A	N/A
PRANA	Power Amplifier + Directional Coupler	UX15	1305-1355	SAR-055	N/A	N/A
Agilent	Power Meter	1914A	MY50801712	SAR-041	5/1/2018	1 yr
Agilent	Power Meter	1914A	MY50901710	SAR-052	12/20/2017	1 yr
Agilent	Power Sensor	9304A	MY53040017	SAR-043	5/4/2018	1 yr
Agilent	Power Sensor	9304A	MY53040025	SAR-044	5/4/2018	1 yr
Agilent	Power Sensor	9304A	MY53040024	SAR-064	12/20/2017	1 yr
Agilent	Power Sensor	9304A	MY53040018	SAR-063	12/20/2017	1 yr
Agilent	Network Analyzer	E5071C	MY46316847	SAR-002	12/26/2017	1 yr
Agilent	Dielectric Probe Kit	85070E	MY44300736	SAR-003	2/15/2018	1 yr
SPEAG	DASY Data Acquisition Electronics	DAE4	1383	SAR-034	4/19/2018	1 yr
SPEAG	DASY Data Acquisition Electronics	DAE4	1384	SAR-073	7/17/2018	1 yr
SPEAG	Dosimetric E-Field Probe	EX3DV4	3939	SAR-037	4/27/2018	1 yr
SPEAG	Dosimetric E-Field Probe	EX3DV4	3940	SAR-072	7/20/2018	1 yr

SPEAG	SAR Validation Dipole, 2450 MHz	D2450V2	917	SAR-025	04/21/2018	1 yr
SPEAG	SAR Validation Dipole, 5 GHz	D5GHzV2	1159	SAR-020	04/25/2018	1 yr
SPEAG	Elliptical Phantom	ELI V5.0	1217	N/A	N/A	N/A
SPEAG	Elliptical Phantom	ELI V5.0	1218	N/A	N/A	N/A
Thomas Scientific	Thermometer	1230N27	150530613	SAR-113	8/4/2018	1 yr
Thomas Scientific	Thermometer	1230N27	170259888	SAR-159	4/11/2018	1 yr
Thomas Scientific	Thermometer	1230N27	170260196	SAR-160	4/11/2018	1 yr
MadgeTech	THP Monitor	PRHTemp2000	N84195	EMC-170	8/31/2017	1 yr
MadgeTech	THP Monitor	PRHTemp2000	P24730	RF-168	8/24/2017	1 yr

6 Product Description

Company Name:	Microsoft Corporation
Address:	One Microsoft Way
City, State, Zip:	Redmond, WA 98052
Customer Contact:	Sahithi Kandula
Functional Description of the EUT:	Portable Computing Device with IEEE 802.11a/b/g/n/ac MIMO radio supporting 20/40/80 MHz bandwidths, Bluetooth 4.0 radio.
RF Exposure Conditions:	Body Exposure
Model:	1832
FCC ID:	C3K1832
IC ID:	3048A-1832
Radio Descriptions:	WLAN Main 2.4 GHz: 802.11b, 802.11g, 802.11n 20 MHz BW's WLAN Main 5 GHz: 802.11a, 802.11n, 802.11ac 20, 40, 80 MHz Bluetooth™ (Basic and Enhanced Data Rates) / Bluetooth LE
Frequency Range of Operation:	WLAN Radio: (MIMO 2TX) 2412 – 2467 MHz, 5180 – 5825 MHz BT / BTLE: 2402 – 2480 MHz
Modulations:	WLAN: CCK, BPSK, QPSK, 16-QAM, 64-QAM, 256-QAM Bluetooth: GFSK, $\frac{\pi}{4}$DQPSK, and 8 DPSK
Antenna Peak Gains (dBi):	

Radio	Band	Main	MIMO
WLAN Main	2400 – 2483.5 MHz	3.26	2.58
	5150 – 5350 MHz	3.63	5.38
	5470 – 5725 MHz	3.77	4.89
	5725 – 5850 MHz	2.38	2.51

Equipment Design State:	Prototype/Production Equivalent
Equipment Condition:	Good
Dates of Testing:	08/07/2017 – 08/19/2017

6.1 TEST CONFIGURATIONS

Radiated and Conducted measurements were performed with customer-provided test software “WiFi Tool” (V2.7.5), which utilizes “DUT Labtool” (V2.0.0.77) provided by the module manufacturer, to program the EUT in continuous transmit mode.

6.2 ENVIRONMENTAL CONDITIONS

Ambient air temperature of the test site was within the range of 18 ºC to 25 ºC. Testing conditions were within tolerance and any deviations required from the EUT are reported.

6.3 EQUIPMENT MODIFICATIONS

No modifications were made during testing.

6.4 EQUIPMENT UNDER TEST

Model Number	Serial Number	SW Version	FW Version
1832	012795472657	Windows 10	2.1704.0

6.4.1 Accessory Test Equipment

Description	Model Number	Serial Number
Detachable Keyboard	1834	019831672654

6.5 Supported Air Interfaces and Transmission Configurations

The EUT has two antennas which support the following air interfaces and transmission configurations. The antennas are labeled as Main Antenna (Chain B) and MIMO Antenna (Chain A).

6.5.1 Supported Air Interfaces

Band	Air Interface	BW (MHz)		
		20	40	80
WLAN 2.4 GHz	802.11b	X		
	802.11g	X		
	802.11n	X		
WLAN 5 GHz	802.11a	X		
	802.11n	X	X	
	802.11ac	X	X	X
2.4 GHz	Bluetooth	NA		
	BTLE	NA		

6.5.2 Transmission Configurations

Main Antenna (Chain B)	MIMO Antenna (Chain A)
WLAN 2.4 GHz	
	WLAN 2.4 GHz
WLAN 5 GHz	
	WLAN 5 GHz
WLAN 2.4 GHz	WLAN 2.4 GHz
WLAN 5 GHz	WLAN 5 GHz
Bluetooth	
Bluetooth	WLAN 2.4 GHz
Bluetooth	WLAN 5 GHz

7 Test Methodology

Test setup and procedure are performed according to **IEEE 1528-2013 Recommended Practice for Determining the Peak Spatial-Average Specific Absorption Rate (SAR) in the Human Head from Wireless Communication Devices: Measurement Techniques.**

In addition, the following publications were used as guidance-

For FCC SAR testing and reporting according to FCC standards the following KDBs were adhered to:

- 447498 D01 General RF Exposure Guidance v06
- 865664 D01 SAR Measurement 100 MHz to 6 GHz v01r04
- 865664 D02 RF Exposure Reporting v01r02
- 248227 D01 802.11Wi-Fi SAR v02r02
- 616217 D04 SAR for laptops and tablets v01r02

8 Conducted RF Average Output Power Measurements

Bluetooth and WLAN output power measurements are made with the DUT connected to the power sensor of a broadband power meter.

8.1 Bluetooth Conducted Output Power Measurements

Channel	Frequency (MHz)	Conducted Average Output Power (dBm)			
		Modulation			Maximum Target Power (GFSK)
		GFSK	π/4-DPSK	8DPSK	
0	2402	4.5	1.6	1.6	5.5
39	2440	4.49	1.45	1.45	
78	2480	4.33	1.27	1.26	

8.2 Bluetooth LE Conducted Output Power Measurements

Channel	Frequency (MHz)	Conducted Average Output Power (dBm)	
		Measured	Maximum Target Power
0	2402	0.63	5.5
19	2440	0.65	
39	2480	0.65	

8.3 WLAN Power Measurement Requirements

According to **KDB 248227 v02r02 Section 4,** maximum output power must be measured according to the default power measurement procedures below. When SAR measurement is required, power measurement is also required to confirm output power settings and to determine reported SAR. Additional power measurements may be necessary to determine SAR test reduction for test channels in a transmission mode. If the required power measurement is not included in the default configuration, it is typically measured immediately before and/or after the SAR measurement. Otherwise, when power measurement is not required for a transmission mode, the maximum output power and tune-up tolerance specified for production units can generally be used to determine SAR test exclusion and reduction.

The default power measurement procedures are:

1) Power must be measured at each transmit antenna port according to the DSSS and OFDM transmission configuration in each standalone and aggregated frequency band.
2) Power measurement is required for the transmission mode configuration with the highest maximum output power specified for production units.
   a) When the same higher maximum output power specification applies to multiple transmission modes, the largest channel bandwidth configuration with the lowest order modulation and lowest data rate is measured.
   b) When the same highest maximum output power is specified for multiple largest channel bandwidth configurations with the same lowest order modulation or lowest order modulation and lowest data rate, power measurement is required for all equivalent 802.11 configurations with the same maximum output power.
3) For each transmission mode configuration, power must be measured for the highest and lowest channels; and at the mid-band channel(s) when there are at least 3 channels. For configurations with multiple mid-band channels, due to an even number of channels, both channels should be measured.

8.4 Initial Test Configuration for OFDM Configurations

*The Initial Test Configuration was chosen according to KDB 248227 v02r02 Section 5.3 from the mode with the highest maximum output power including tune-up tolerances, the highest channel bandwidth among those modes, the lowest order modulation, and the lowest data rate. The channel with the highest output power in that mode is chosen as the initial test channel. If multiple test channels have the same measured maximum output power, the channel chosen for SAR measurement is chosen by the following (applicable to subsequent test configuration as well).

1) The channel closest to mid-band frequency is selected for SAR measurement.
2) For channels with equal separation from mid-band frequency, for example, high and low channels or two mid-band channels, the higher frequency (number) channel is selected for SAR measurement.

8.5 WLAN 2.4 GHz Conducted Output Power Measurements – High Power

Mode	Chann.	Freq. (MHz)	Maximum Conducted Average Output Power (dBm)							
			SISO (1 TX)				MIMO (2 TX)			
			Main Ant		MIMO Ant		Main Ant		MIMO Ant	
			Meas.	Max	Meas.	Max	Meas.	Max	Meas.	Max
802.11b 1Mbps	1	2412	-	14.5	-	14.5	-	14.5	-	14.5
	2	2417	-	14.5	-	14.5	-	14.5	-	14.5
	6	2437	-	14.5	-	14.5	-	14.5	-	14.5
	11	2462	-	14.5	-	14.5	-	14.5	-	14.5
	12	2467	-	9.5	-	9.5	-	9.5	-	9.5
	13	2472	-	9.5	-	9.5	-	9.5	-	9.5
802.11g 6Mbps	1	2412	-	11.5	-	11.5	-	11.5	-	11.5
	2	2417	-	14.5	-	14.5	-	14.5	-	14.5
	6	2437	-	14.5	-	14.5	-	14.5	-	14.5
	11	2462	-	13.5	-	13.5	-	13.5	-	13.5
	12	2467	-	9.5	-	9.5	-	9.5	-	9.5
	13	2472	-	9.5	-	9.5	-	9.5	-	9.5
802.11n HT20 MCS0	1	2412	-	11.5	-	11.5	-	11.5	-	11.5
	2	2417	-	14.5	-	14.5	-	14.5	-	14.5
	6	2437	-	14.5	-	14.5	-	14.5	-	14.5
	11	2462	-	13.5	-	13.5	-	13.5	-	13.5
	12	2467	-	9.5	-	9.5	-	9.5	-	9.5
	13	2472	-	9.5	-	9.5	-	9.5	-	9.5

The device only uses the high power table when configured as a laptop. Since the antennas are on the top of the display with a minimum 154.1 mm separation distance to the user, SAR testing is not required in the laptop configuration. See section 9.1 for SAR test exclusion details. Thus, conducted measurements were not performed for the high power table.

8.6 WLAN 2.4 GHz Conducted Output Power Measurements – Reduced Power

Mode	Chann.	Freq. (MHz)	Maximum Conducted Average Output Power (dBm)							
			SISO (1 TX)				MIMO (2 TX)			
			Main Ant		MIMO Ant		Main Ant		MIMO Ant	
			Meas.	Max	Meas.	Max	Meas.	Max	Meas.	Max
802.11b 1Mbps	1	2412	8.5	9.5	8.39	9.5	-	9.5	-	9.5
	6	2437	8.35	9.5	8.77	9.5	-	9.5	-	9.5
	11	2462	8.49	9.5	8.93	9.5	-	9.5	-	9.5
	12	2467	-	9.5	-	9.5	-	9.5	-	9.5
	13	2472	-	9.5	-	9.5	-	9.5	-	9.5
802.11g 6Mbps	1	2412	8.15	9.5	7.84	9.5	-	9.5	-	9.5
	6	2437	7.85	9.5	8.18	9.5	-	9.5	-	9.5
	11	2462	7.94	9.5	7.94	9.5	-	9.5	-	9.5
	12	2467	-	9.5	-	9.5	-	9.5	-	9.5
	13	2472	-	9.5	-	9.5	-	9.5	-	9.5
802.11n HT20 MCS0	1	2412	7.97	9.5	7.94	9.5	-	9.5	-	9.5
	6	2437	7.96	9.5	8.05	9.5	-	9.5	-	9.5
	11	2462	8.15	9.5	8.15	9.5	-	9.5	-	9.5
	12	2467	-	9.5	-	9.5	-	9.5	-	9.5
	13	2472	-	9.5	-	9.5	-	9.5	-	9.5

Power measurements not listed are not required under the rules of **KDB 248227 v02r02 Section 4.**

Since channels 12 and 13 do not have higher specified maximum output power than the other channels, SAR is evaluated on channels 1, 6, and 11. **KDB 248227 D01 Section 3.1**

8.7 WLAN 5 GHz Conducted Output Power Measurements

8.7.1 5.2 GHz Conducted Measurements (U-NII-1) – High Power

Mode	Chann.	Freq. (MHz)	Maximum Conducted Average Output Power (dBm)							
			SISO (1 TX)				MIMO (2 TX)			
			Main Ant		MIMO Ant		Main Ant		MIMO Ant	
			Meas.	Max	Meas.	Max	Meas.	Max	Meas.	Max
802.11a 6Mbps	36	5180	-	9.5	-	9.5	-	9.5	-	9.5
	40	5200	-	9.5	-	9.5	-	9.5	-	9.5
	44	5220	-	9.5	-	9.5	-	9.5	-	9.5
	48	5240	-	9.5	-	9.5	-	9.5	-	9.5
802.11n HT20 MCS0	36	5180	-	9.5	-	9.5	-	9.5	-	9.5
	40	5200	-	9.5	-	9.5	-	9.5	-	9.5
	44	5220	-	9.5	-	9.5	-	9.5	-	9.5
	48	5240	-	9.5	-	9.5	-	9.5	-	9.5
802.11n HT40 MCS0	38	5190	-	11.5	-	11.5	-	11.5	-	11.5
	46	5230	-	12.5	-	12.5	-	12.5	-	12.5
802.11ac VHT20 MCS0	36	5180	-	9.5	-	9.5	-	9.5	-	9.5
	40	5200	-	9.5	-	9.5	-	9.5	-	9.5
	44	5220	-	9.5	-	9.5	-	9.5	-	9.5
	48	5240	-	9.5	-	9.5	-	9.5	-	9.5
802.11ac VHT40 MCS0	38	5190	-	11.5	-	11.5	-	11.5	-	11.5
	46	5230	-	12.5	-	12.5	-	12.5	-	12.5
802.11ac VHT80 MCS0	42	5210	-	8.5	-	8.5	-	8.5	-	8.5

The device only uses the high power table when configured as a laptop. Since the antennas are on the top of the display with a minimum 154.1 mm separation distance to the user, SAR testing is not required in the laptop configuration. See section 9.1 for SAR test exclusion details. Thus, conducted measurements were not performed for the high power table.

.

8.7.2 5.2 GHz Conducted Measurements (U-NII-1) – Reduced Power

Mode	Chann.	Freq. (MHz)	Maximum Conducted Average Output Power (dBm)							
			SISO (1 TX)				MIMO (2 TX)			
			Main Ant		MIMO Ant		Main Ant		MIMO Ant	
			Meas.	Max	Meas.	Max	Meas.	Max	Meas.	Max
802.11a 6Mbps	36	5180	-	9.5	-	9.5	-	9.5	-	9.5
	40	5200	-	9.5	-	9.5	-	9.5	-	9.5
	44	5220	-	9.5	-	9.5	-	9.5	-	9.5
	48	5240	-	9.5	-	9.5	-	9.5	-	9.5
802.11n HT20 MCS0	36	5180	-	9.5	-	9.5	-	9.5	-	9.5
	40	5200	-	9.5	-	9.5	-	9.5	-	9.5
	44	5220	-	9.5	-	9.5	-	9.5	-	9.5
	48	5240	-	9.5	-	9.5	-	9.5	-	9.5
802.11n HT40 MCS0	38	5190	8.0	9.5	7.95	9.5	-	9.5	-	9.5
	46	5230	7.9	9.5	8.1	9.5	-	9.5	-	9.5
802.11ac VHT20 MCS0	36	5180	-	9.5	-	9.5	-	9.5	-	9.5
	40	5200	-	9.5	-	9.5	-	9.5	-	9.5
	44	5220	-	9.5	-	9.5	-	9.5	-	9.5
	48	5240	-	9.5	-	9.5	-	9.5	-	9.5
802.11ac VHT40 MCS0	38	5190	8.0	9.5	7.95	9.5	-	9.5	-	9.5
	46	5230	7.9	9.5	8.05	9.5	-	9.5	-	9.5
802.11ac VHT80 MCS0	42	5210	-	8.5	-	8.5	-	8.5	-	8.5

Power measurements not listed are not required under the rules of **KDB 248227 v02r02 Section 4.**

8.7.3 5.3 GHz Conducted Measurements (U-NII-2A) – High Power

Mode	Chann.	Freq. (MHz)	Maximum Conducted Average Output Power (dBm)							
			SISO (1 TX)				MIMO (2 TX)			
			Main Ant		MIMO Ant		Main Ant		MIMO Ant	
			Meas.	Max	Meas.	Max	Meas.	Max	Meas.	Max
802.11a 6Mbps	52	5260	-	14.5	-	14.5	-	14.5	-	14.5
	56	5280	-	14.5	-	14.5	-	14.5	-	14.5
	60	5300	-	14.5	-	14.5	-	14.5	-	14.5
	64	5320	-	14.5	-	14.5	-	14.5	-	14.5
802.11n HT20 MCS0	52	5260	-	14.5	-	14.5	-	14.5	-	14.5
	56	5280	-	14.5	-	14.5	-	14.5	-	14.5
	60	5300	-	14.5	-	14.5	-	14.5	-	14.5
	64	5320	-	14.5	-	14.5	-	14.5	-	14.5
802.11n HT40 MCS0	54	5270	-	13.5	-	13.5	-	13.5	-	13.5
	62	5310	-	11.5	-	11.5	-	11.5	-	11.5
802.11ac VHT20 MCS0	52	5260	-	14.5	-	14.5	-	14.5	-	14.5
	56	5280	-	14.5	-	14.5	-	14.5	-	14.5
	60	5300	-	14.5	-	14.5	-	14.5	-	14.5
	64	5320	-	14.5	-	14.5	-	14.5	-	14.5
802.11ac VHT40 MCS0	54	5270	-	13.5	-	13.5	-	13.5	-	13.5
	62	5310	-	11.5	-	11.5	-	11.5	-	11.5
802.11ac VHT80 MCS0	56	5290	-	7.5	-	7.5	-	7.5	-	7.5

The device only uses the high power table when configured as a laptop. Since the antennas are on the top of the display with a minimum 154.1 mm separation distance to the user, SAR testing is not required in the laptop configuration. See section 9.1 for SAR test exclusion details. Thus, conducted measurements were not performed for the high power table.

8.7.4 5.3 GHz Conducted Measurements (U-NII-2A) – Reduced Power

Mode	Chann.	Freq. (MHz)	Maximum Conducted Average Output Power (dBm)							
			SISO (1 TX)				MIMO (2 TX)			
			Main Ant		MIMO Ant		Main Ant		MIMO Ant	
			Meas.	Max	Meas.	Max	Meas.	Max	Meas.	Max
802.11a 6Mbps	52	5260	-	8.5	-	8.5	-	8.5	-	8.5
	56	5280	-	8.5	-	8.5	-	8.5	-	8.5
	60	5300	-	8.5	-	8.5	-	8.5	-	8.5
	64	5320	-	8.5	-	8.5	-	8.5	-	8.5
802.11n HT20 MCS0	52	5260	-	8.5	-	8.5	-	8.5	-	8.5
	56	5280	-	8.5	-	8.5	-	8.5	-	8.5
	60	5300	-	8.5	-	8.5	-	8.5	-	8.5
	64	5320	-	8.5	-	8.5	-	8.5	-	8.5
802.11n HT40 MCS0	54	5270	-	8.5	-	8.5	-	8.5	-	8.5
	62	5310	-	8.5	-	8.5	-	8.5	-	8.5
802.11ac VHT20 MCS0	52	5260	-	8.5	-	8.5	-	8.5	-	8.5
	56	5280	-	8.5	-	8.5	-	8.5	-	8.5
	60	5300	-	8.5	-	8.5	-	8.5	-	8.5
	64	5320	-	8.5	-	8.5	-	8.5	-	8.5
802.11ac VHT40 MCS0	54	5270	-	8.5	-	8.5	-	8.5	-	8.5
	62	5310	-	8.5	-	8.5	-	8.5	-	8.5
802.11ac VHT80 MCS0	56	5290	-	7.5	-	7.5	-	7.5	-	7.5

Conducted Power Measurements were not performed in the U-NII-2A band since SAR testing is excluded for it in this case by **KDB 248227 v02r02 Section 5.3.1.** See the section on WLAN 5.3 GHz SAR results in this report for further details.

8.7.5 5.6 GHz Conducted Measurements (U-NII-2C) – High Power

Mode	Chann.	Freq. (MHz)	Maximum Conducted Average Output Power (dBm)							
			SISO (1 TX)				MIMO (2 TX)			
			Main Ant		MIMO Ant		Main Ant		MIMO Ant	
			Meas.	Max	Meas.	Max	Meas.	Max	Meas.	Max
802.11a 6Mbps	100	5500	-	14.5	-	14.5	-	14.5	-	14.5
	104	5520	-	14.5	-	14.5	-	14.5	-	14.5
	108	5540	-	14.5	-	14.5	-	14.5	-	14.5
	112	5560	-	14.5	-	14.5	-	14.5	-	14.5
	116	5580	-	14.5	-	14.5	-	14.5	-	14.5
	120	5600	-	14.5	-	14.5	-	14.5	-	14.5
	124	5620	-	14.5	-	14.5	-	14.5	-	14.5
	128	5640	-	14.5	-	14.5	-	14.5	-	14.5
	132	5660	-	14.5	-	14.5	-	14.5	-	14.5
	136	5680	-	14.5	-	14.5	-	14.5	-	14.5
	140	5700	-	14.5	-	14.5	-	14.5	-	14.5
	144	5720	-	14.5	-	14.5	-	14.5	-	14.5
802.11n HT20 MCS0	100	5500	-	14.5	-	14.5	-	14.5	-	14.5
	104	5520	-	14.5	-	14.5	-	14.5	-	14.5
	108	5540	-	14.5	-	14.5	-	14.5	-	14.5
	112	5560	-	14.5	-	14.5	-	14.5	-	14.5
	116	5580	-	14.5	-	14.5	-	14.5	-	14.5
	120	5600	-	14.5	-	14.5	-	14.5	-	14.5
	124	5620	-	14.5	-	14.5	-	14.5	-	14.5
	128	5640	-	14.5	-	14.5	-	14.5	-	14.5
	132	5660	-	14.5	-	14.5	-	14.5	-	14.5
	136	5680	-	14.5	-	14.5	-	14.5	-	14.5
	140	5700	-	14.5	-	14.5	-	14.5	-	14.5
	144	5720	-	14.5	-	14.5	-	14.5	-	14.5
802.11n HT40 MCS0	102	5510	-	11.5	-	11.5	-	11.5	-	11.5
	110	5550	-	13.5	-	13.5	-	13.5	-	13.5
	118	5590	-	13.5	-	13.5	-	13.5	-	13.5
	126	5630	-	13.5	-	13.5	-	13.5	-	13.5
	134	5670	-	13.5	-	13.5	-	13.5	-	13.5
	142	5710	-	13.5	-	13.5	-	13.5	-	13.5

The device only uses the high power table when configured as a laptop. Since the antennas are on the top of the display with a minimum 154.1 mm separation distance to the user, SAR testing is not required in the laptop configuration. See section 9.1 for SAR test exclusion details. Thus, conducted measurements were not performed for the high power table.

8.7.6 5.6 GHz Conducted Measurements (U-NII-2C) – High Power Continued

Mode	Chann.	Freq. (MHz)	Maximum Conducted Average Output Power (dBm)							
			SISO (1 TX)				MIMO (2 TX)			
			Main Ant		MIMO Ant		Main Ant		MIMO Ant	
			Meas.	Max	Meas.	Max	Meas.	Max	Meas.	Max
802.11ac VHT20 MCS0	100	5500	-	14.5	-	14.5	-	14.5	-	14.5
	104	5520	-	14.5	-	14.5	-	14.5	-	14.5
	108	5540	-	14.5	-	14.5	-	14.5	-	14.5
	112	5560	-	14.5	-	14.5	-	14.5	-	14.5
	116	5580	-	14.5	-	14.5	-	14.5	-	14.5
	120	5600	-	14.5	-	14.5	-	14.5	-	14.5
	124	5620	-	14.5	-	14.5	-	14.5	-	14.5
	128	5640	-	14.5	-	14.5	-	14.5	-	14.5
	132	5660	-	14.5	-	14.5	-	14.5	-	14.5
	136	5680	-	14.5	-	14.5	-	14.5	-	14.5
	140	5700	-	14.5	-	14.5	-	14.5	-	14.5
	144	5720		14.5		14.5		14.5		14.5
802.11ac VHT40 MCS0	102	5510	-	11.5	-	11.5	-	11.5	-	11.5
	110	5550	-	13.5	-	13.5	-	13.5	-	13.5
	118	5590	-	13.5	-	13.5	-	13.5	-	13.5
	126	5630	-	13.5	-	13.5	-	13.5	-	13.5
	134	5670	-	13.5	-	13.5	-	13.5	-	13.5
	142	5710		13.5		13.5		13.5		13.5
802.11ac VHT80 MCS0	106	5530	-	6.5	-	6.5	-	6.5	-	6.5
	122	5610	-	12.5	-	12.5	-	12.5	-	12.5
	138	5690		12.5		12.5		12.5		12.5

The device only uses the high power table when configured as a laptop. Since the antennas are on the top of the display with a minimum 154.1 mm separation distance to the user, SAR testing is not required in the laptop configuration. See section 9.1 for SAR test exclusion details. Thus, conducted measurements were not performed for the high power table.

8.7.7 5.6 GHz Conducted Measurements (U-NII-2C) – Reduced Power

Mode	Chann.	Freq. (MHz)	Maximum Conducted Average Output Power (dBm)							
			SISO (1 TX)				MIMO (2 TX)			
			Main Ant		MIMO Ant		Main Ant		MIMO Ant	
			Meas.	Max	Meas.	Max	Meas.	Max	Meas.	Max
802.11a 6Mbps	100	5500	-	8.5	-	8.5	-	8.5	-	8.5
	104	5520	-	8.5	-	8.5	-	8.5	-	8.5
	108	5540	-	8.5	-	8.5	-	8.5	-	8.5
	112	5560	-	8.5	-	8.5	-	8.5	-	8.5
	116	5580	-	8.5	-	8.5	-	8.5	-	8.5
	120	5600	-	8.5	-	8.5	-	8.5	-	8.5
	124	5620	7.13	8.5	-	8.5	-	8.5	-	8.5
	128	5640	7.20	8.5	-	8.5	-	8.5	-	8.5
	132	5660	7.21	8.5	-	8.5	-	8.5	-	8.5
	136	5680	7.29	8.5	-	8.5	-	8.5	-	8.5
	140	5700	-	8.5	-	8.5	-	8.5	-	8.5
	144	5720	-	8.5	-	8.5	-	8.5	-	8.5
802.11n HT20 MCS0	100	5500	-	8.5	-	8.5	-	8.5	-	8.5
	104	5520	-	8.5	-	8.5	-	8.5	-	8.5
	108	5540	-	8.5	-	8.5	-	8.5	-	8.5
	112	5560	-	8.5	-	8.5	-	8.5	-	8.5
	116	5580	-	8.5	-	8.5	-	8.5	-	8.5
	120	5600	-	8.5	-	8.5	-	8.5	-	8.5
	124	5620	-	8.5	-	8.5	-	8.5	-	8.5
	128	5640	-	8.5	-	8.5	-	8.5	-	8.5
	132	5660	-	8.5	-	8.5	-	8.5	-	8.5
	136	5680	-	8.5	-	8.5	-	8.5	-	8.5
	140	5700	-	8.5	-	8.5	-	8.5	-	8.5
	144	5720	-	8.5	-	8.5	-	8.5	-	8.5
802.11n HT40 MCS0	102	5510	7.19	8.5	-	8.5	-	8.5	-	8.5
	110	5550	7.08	8.5	-	8.5	-	8.5	-	8.5
	118	5590	7.21	8.5	-	8.5	-	8.5	-	8.5
	126	5630	7.04	8.5	-	8.5	-	8.5	-	8.5
	134	5670	7.18	8.5	-	8.5	-	8.5	-	8.5
	142	5710	6.88	8.5	-	8.5	-	8.5	-	8.5

Power measurements not listed are not required under the rules of **KDB 248227 v02r02 Section 4.**

8.7.8 5.6 GHz Conducted Measurements (U-NII-2C) – Reduced Power Continued

Mode	Chann.	Freq. (MHz)	Maximum Conducted Average Output Power (dBm)							
			SISO (1 TX)				MIMO (2 TX)			
			Main Ant		MIMO Ant		Main Ant		MIMO Ant	
			Meas.	Max	Meas.	Max	Meas.	Max	Meas.	Max
802.11ac VHT20 MCS0	100	5500	-	8.5	-	8.5	-	8.5	-	8.5
	104	5520	-	8.5	-	8.5	-	8.5	-	8.5
	108	5540	-	8.5	-	8.5	-	8.5	-	8.5
	112	5560	-	8.5	-	8.5	-	8.5	-	8.5
	116	5580	-	8.5	-	8.5	-	8.5	-	8.5
	120	5600	-	8.5	-	8.5	-	8.5	-	8.5
	124	5620	-	8.5	-	8.5	-	8.5	-	8.5
	128	5640	-	8.5	-	8.5	-	8.5	-	8.5
	132	5660	-	8.5	-	8.5	-	8.5	-	8.5
	136	5680	-	8.5	-	8.5	-	8.5	-	8.5
	140	5700	-	8.5	-	8.5	-	8.5	-	8.5
	144	5720	-	8.5	-	8.5	-	8.5	-	8.5
802.11ac VHT40 MCS0	102	5510	-	8.5	-	8.5	-	8.5	-	8.5
	110	5550	-	8.5	-	8.5	-	8.5	-	8.5
	118	5590	-	8.5	-	8.5	-	8.5	-	8.5
	126	5630	-	8.5	-	8.5	-	8.5	-	8.5
	134	5670	-	8.5	-	8.5	-	8.5	-	8.5
	142	5710	-	8.5	-	8.5	-	8.5	-	8.5
802.11ac VHT80 MCS0	106	5530	5.34	6.5	5.63	6.5	-	6.5	-	6.5
	122	5610	7.19	8.5	7.18	8.5	-	8.5	-	8.5
	138	5690	7.15	8.5	7.11	8.5	-	8.5	-	8.5

Power measurements not listed are not required under the rules of **KDB 248227 v02r02 Section 4.**

8.7.9 5.8 GHz Conducted Measurements (U-NII-3) – High Power

Mode	Chann.	Freq. (MHz)	Maximum Conducted Average Output Power (dBm)							
			SISO (1 TX)				MIMO (2 TX)			
			Main Ant		MIMO Ant		Main Ant		MIMO Ant	
			Meas.	Max	Meas.	Max	Meas.	Max	Meas.	Max
802.11a 6Mbps	149	5745	-	13.5	-	13.5	-	13.5	-	13.5
	153	5765	-	13.5	-	13.5	-	13.5	-	13.5
	157	5785	-	13.5	-	13.5	-	13.5	-	13.5
	161	5805	-	13.5	-	13.5	-	13.5	-	13.5
	165	5825	-	13.5	-	13.5	-	13.5	-	13.5
802.11n HT20 MCS0	149	5745	-	13.5	-	13.5	-	13.5	-	13.5
	153	5765	-	13.5	-	13.5	-	13.5	-	13.5
	157	5785	-	13.5	-	13.5	-	13.5	-	13.5
	161	5805	-	13.5	-	13.5	-	13.5	-	13.5
	165	5825	-	13.5	-	13.5	-	13.5	-	13.5
802.11n HT40 MCS0	151	5755	-	11.5	-	11.5	-	11.5	-	11.5
	159	5795	-	13.5	-	13.5	-	13.5	-	13.5
802.11ac VHT20 MCS0	149	5745	-	13.5	-	13.5	-	13.5	-	13.5
	153	5765	-	13.5	-	13.5	-	13.5	-	13.5
	157	5785	-	13.5	-	13.5	-	13.5	-	13.5
	161	5805	-	13.5	-	13.5	-	13.5	-	13.5
	165	5825	-	13.5	-	13.5	-	13.5	-	13.5
802.11ac VHT40 MCS0	151	5755	-	11.5	-	11.5	-	11.5	-	11.5
	159	5795	-	13.5	-	13.5	-	13.5	-	13.5
802.11ac VHT80 MCS0	155	5775	-	7.5	-	7.5	-	7.5	-	7.5

The device only uses the high power table when configured as a laptop. Since the antennas are on the top of the display with a minimum 154.1 mm separation distance to the user, SAR testing is not required in the laptop configuration. See section 9.1 for SAR test exclusion details. Thus, conducted measurements were not performed for the high power table.

8.7.10 5.8 GHz Conducted Measurements (U-NII-3) – Reduced Power

Mode	Chann.	Freq. (MHz)	Maximum Conducted Average Output Power (dBm)							
			SISO (1 TX)				MIMO (2 TX)			
			Main Ant		MIMO Ant		Main Ant		MIMO Ant	
			Meas.	Max	Meas.	Max	Meas.	Max	Meas.	Max
802.11a 6Mbps	149	5745	8.56	9.5	-	9.5	-	9.5	-	9.5
	153	5765	8.51	9.5	-	9.5	-	9.5	-	9.5
	157	5785	8.48	9.5	-	9.5	-	9.5	-	9.5
	161	5805	8.48	9.5	-	9.5	-	9.5	-	9.5
	165	5825	8.45	9.5	-	9.5	-	9.5	-	9.5
802.11n HT20 MCS0	149	5745	-	9.5	-	9.5	-	9.5	-	9.5
	153	5765	-	9.5	-	9.5	-	9.5	-	9.5
	157	5785	-	9.5	-	9.5	-	9.5	-	9.5
	161	5805	-	9.5	-	9.5	-	9.5	-	9.5
	165	5825	-	9.5	-	9.5	-	9.5	-	9.5
802.11n HT40 MCS0	151	5755	8.45	9.5	8.87	9.5	-	9.5	-	9.5
	159	5795	8.44	9.5	8.86	9.5	-	9.5	-	9.5
802.11ac VHT20 MCS0	149	5745	-	9.5	-	9.5	-	9.5	-	9.5
	153	5765	-	9.5	-	9.5	-	9.5	-	9.5
	157	5785	-	9.5	-	9.5	-	9.5	-	9.5
	161	5805	-	9.5	-	9.5	-	9.5	-	9.5
	165	5825	-	9.5	-	9.5	-	9.5	-	9.5
802.11ac VHT40 MCS0	151	5755	-	9.5	-	9.5	-	9.5	-	9.5
	159	5795	-	9.5	-	9.5	-	9.5	-	9.5
802.11ac VHT80 MCS0	155	5775	-	7.5	-	7.5	-	7.5	-	7.5

Power measurements not listed are not required under the rules of **KDB 248227 v02r02 Section 4.**

9 Test Configurations

The standalone SAR test exclusion equations (KDB 447498 D01 4.3.1) are used to determine which device edges and faces require testing for a given antenna and air interface technology. From **KDB 616217 D04 v01r02** (SAR for laptop and tablets) section 4.3, the SAR test exclusion threshold from KDB 447498 can be applied to determine SAR test exclusion for adjacent edge configurations. The closest distance from the antenna to an adjacent edge is used to determine if SAR testing is required for the adjacent edges. SAR evaluation for the front surface of touch display screens is not necessary since it is not expected to exceed the extremity SAR limit.

1) For antenna to edge separation distances ≤ 50mm, the 1-g SAR test exclusion threshold can be determined by evaluating whether the following is true:

$$\frac{Pmax}{d} * \sqrt{f} \leq 3.0$$

- P_{max} = maximum possible average conducted power of transmitter, including tolerances, rounded to the nearest mW.
- d = closest intended separation distance between transmitting antenna and edge / face of device (mm) (5mm at the least)
- f = frequency of the transmitter for that power level in GHz

2) For antenna to edge separation distances > 50mm, the SAR test exclusion threshold is determined according to the following:

   a) [Power allowed at numeric threshold for 50 mm in step 1) + (test separation distance - 50 mm)·(f(MHz)/150)] mW, at 100 MHz to 1500 MHz
   b) [Power allowed at numeric threshold for 50 mm in step 1) + (test separation distance - 50 mm)·10] mW at > 1500 MHz and ≤ 6 GHz

9.1 Evaluation of Required Test Configurations

The following table shows the maximum frequency of each transmitter in GHz and the maximum output power levels including tolerances rounded to the nearest mW:

Parameters used to Evaluate SAR Test Exclusion	Air Interface		
	WLAN 2.4 GHz	WLAN 5 GHz	BT
Max Freq. (GHz)	2.472	5.825	2.48
Max Power (mW) (Reduced Power)	9.0	9.0	4.0
Max Power (mW) (High Power)	35.0	22.0	4.0

9.1.1 SAR Test Exclusion Evaluation for antenna-user separation distances less than 50mm

SAR evaluation is not required when the values below **≤ 3.0 (numeric threshold).** These values are calculated from each frequency (GHz), output power (mW), and antenna-user separation distance less than 50mm.

Standalone SAR Test Exclusion	MIMO Antenna (Chain A)			Main Antenna (Chain B)			
Device Side	Separation Distance (mm)	Exclusion Threshold (mW)		Separation Distance (mm)	Exclusion Threshold (mW)		
		WLAN 2.4 GHz	WLAN 5 GHz		WLAN 2.4 GHz	WLAN 5 GHz	BT
Keyboard not Attached (Reduced Power)							
Top Edge	**5**	**2.8**	**4.3**	**5**	**2.8**	**4.3**	**1.3**
Bottom Edge	**209.7**	**-**	**-**	**209.7**	**-**	**-**	**-**
Left Edge	**76.15**	**-**	**-**	**226.15**	**-**	**-**	**-**
Right Edge	**193.05**	**-**	**-**	**46.15**	**-**	**-**	**-**
Back	**5**	**2.8**	**4.3**	**5**	**2.8**	**4.3**	**1.3**
Keyboard Attached in Laptop Configuration (High Power)							
Bottom	**154.1**	**-**	**-**	**154.1**	**-**	**-**	**-**

See attachments for antenna locations diagram.

	SAR Testing Performed
	SAR Testing Not Required

9.1.2 SAR Test Exclusion Evaluation for antenna-user separation distances greater than 50mm

The **SAR exclusion thresholds** calculated from each frequency (GHz) and antenna-user separation distance greater than 50mm are shown below. SAR testing is not required for the given edge / face and frequency combination when the maximum output power is less than the exclusion threshold shown here.

Standalone SAR Test Exclusion	MIMO Antenna (Chain A)			Main Antenna (Chain B)			
Device Side	Separation Distance (mm)	Exclusion Threshold (mW)		Separation Distance (mm)	Exclusion Threshold (mW)		
		WLAN 2.4 GHz	WLAN 5 GHz		WLAN 2.4 GHz	WLAN 5 GHz	BT
Keyboard not Attached (Reduced Power)							
Top Edge	**5**	**-**	**-**	**5**	**-**	**-**	**-**
Bottom Edge	**209.7**	**1596**	**1562**	**209.7**	**1596**	**1562**	**1595**
Left Edge	**76.15**	**357**	**324**	**226.15**	**1857**	**1824**	**1857**
Right Edge	**193.05**	**1526**	**1493**	**46.15**	**88**	**57**	**88**
Back	**5**	**-**	**-**	**5**	**-**	**-**	**-**
Keyboard Attached in Laptop Configuration (High Power)							
Bottom	**154.1**	**1136**	**1103**	**154.1**	**1136**	**1103**	**1136**

See attachments for antenna locations diagram.

	SAR Testing Performed
	SAR Testing Not Required

9.2 Test Positions

Reduced power is enabled when the device is being used in a tablet mode. Tablet mode includes both the cases where either the keyboard is not physically connected or when the manufacturer's proprietary mechanism determines that the device is not being used in a laptop mode. The mechanism's suitability for determining that the device is in laptop mode was confirmed via KDB inquiry with the FCC. Full details are in the Operational Description.

9.2.1 Test Positions without Keyboard

See previous section for justification of test positions for this configuration.

Exposure Condition	Phantom Used	DUT Test Position	Test Setup Photo (See Appendix)
Body	Flat Section (SAM, ELI, or Triple-Flat)	Back 0mm	Photo 1
		Top Edge 0mm	Photo 2

9.2.2 Additional Test Positions with Keyboard Attached

This device can be used with or without the keyboard. The following test configurations were also performed with the device attached to the keyboard and folded back as it would be in typical use exposure conditions. These positions were only checked against the worst configuration and position for each band.

Exposure Condition	Phantom Used	DUT Test Position	Test Setup Photo (See Appendix)
Body	Flat Section (SAM, ELI, or Triple-Flat)	Top Edge 0mm with Keyboard	Photo 3

9.2.3 Laptop Configuration

This device was not tested for this configuration (see page 2 of test setup photos). This configuration is typically tested for exposure coming from the bottom of the keyboard when antennas are installed in or near the base of the keyboard. In this device with the antennas at the top of the display, the separation distance between the antennas and the base of the keyboard is large enough so SAR testing is not required for this position, as shown in the previous section.

The display can extend back to a maximum angle of 135° when in a laptop configuration. This is the closest the antennas can get to the lap of a user when configured as a laptop, so this distance of 154.1 mm is used for the Laptop SAR test exclusion of the previous section.

10 SAR Test Procedures

The SAR Evaluation was performed in the following steps:

- **Power Reference Measurement.**
  The Power Measurement and Power Drift Measurements are for monitoring the power drift of the device under test. The minimum distance of probe sensors to surface determines the closest measurement point to phantom surface. The minimum distance of probe sensors to surface is set to 2mm for the EX3DV4 probe as recommended by SPEAG. The Power Reference Measurement is taken at a point close to the antenna whose output is being measured in order to maximize SNR, thus minimizing drift error.

- **Area Scan**
  The Area Scan is used as a fast scan in two dimensions to find the areas of high field values (or hot spots), before doing a fine measurement around the hotspot. The sophisticated interpolation routines implemented in DASY5 software can find the maximum locations even in relatively coarse grids. When an Area Scan has measured all reachable points, it computes the field maxima found and lists all maxima found in the scan area within a certain range of the global maximum. A 2 dB range is required by IEEE STD 1528. Zoom scans need only be performed on all secondary maxima within this range when the absolute maximum found is under 2 dB less than the SAR limit in question (i.e., less than 1 W/kg for the 1.6 W/kg SAR limit). Otherwise, the zoom scan is only performed at the highest maxima found in the area scan. The exception to this is in MIMO configurations where at least one zoom scan should be measured per transmit antenna.

  The following x-y grid spacings for the given transmitter frequency ranges are used for area scans in accordance with FCC KDB 865664 D01 SAR Measurement 100 MHz to 6 GHz:

  700 MHz – 2 GHz: ≤ 15 mm
  2 GHz – 4 GHz: ≤ 12 mm
  4 GHz – 6 GHz: ≤ 10 mm

- **Zoom Scan**
  Zoom Scans are used to assess the peak spatial SAR values within a cubic averaging volume containing 1g or 10g of simulated tissue. When the measurement is done, the Zoom Scan evaluates the averaged SAR for 1g and 10g and displays these values next to the job's label. The sides of the zoom scan cube should be parallel to the edges of the EUT when possible. The dimensions of a Zoom Scan and spacing between measurement points vary by frequency according to FCC KDB 865664 D01 SAR Measurement 100 MHz to 6 GHz, shown in Table 2 below:

Table 2: Zoom Scan Dimensions

Transmitter Frequency Range	Cube Dimensions	x-y coordinate spatial resolution	z coordinate spatial resolution
700 MHz – 2 GHz	≥ 30 mm	≤ 8 mm	≤ 5 mm
2 GHz – 3 GHz	≥ 28 mm	≤ 5 mm, *≤ 8 mm	≤ 4 mm
3 – 4 GHz	≥ 25 mm	≤ 5 mm, *≤ 7 mm	≤ 3 mm
4 – 6 GHz	≥ 22 mm	≤ 4 mm, *≤ 5 mm	≤ 2 mm

*optional x-y coordinate spatial resolution when Area Scan SAR ≤ 87.5% of applicable SAR limit

- **Power Drift Measurement**
  The Power Drift Measurement measures the field at the same location as the most recent power reference measurement within the same procedure, and with the same settings. The Power Drift Measurement gives the field difference in dB from the reading conducted within the last Power Reference Measurement. The absolute value of this difference must be ≤ 0.21 dB; if it is not, the entire test is repeated or the difference accounted for.

11 SAR Test Results

11.1 General SAR Testing Notes

- From **KDB 447498 D01 General RF Exposure Guidance v06**, the following test channel reduction was applied to each test position of an exposure condition in each wireless mode and configuration. Initial testing for each test position for each band was performed on the middle required test channel (or required test channel with the highest measured power for WLAN modes). Testing of other required channels within the operating mode of a frequency band is not required when the *reported* 1-g or 10-g SAR for the mid-band or highest output power channel is:
  - ≤ 0.8 W/kg or 2.0 W/kg, for 1-g or 10-g respectively, when the transmission band is ≤ 100 MHz
  - ≤ 0.6 W/kg or 1.5 W/kg, for 1-g or 10-g respectively, when the transmission band is between 100 MHz and 200 MHz

- All WLAN measurements were made with the device transmitting at 100% duty cycle.
- Tissue-simulating liquid temperature was maintained within +/- 2°C of that which was measured during liquid verification.

11.2 WLAN 2.4 GHz SAR Testing Notes

(Guidance from KDB 248227 v02r02)

- 802.11b was tested according to the requirements of to **KDB 248227 v02r02 Section 5.2.1 802.11b DSSS SAR Requirements.**
- SAR testing was not performed on 2.4 GHz OFDM modes in accordance with **KDB 248227 v02r02 Section 5.2.2** since the highest reported SAR for DSSS adjusted by the ratio of OFDM to DSSS specified maximum output powers is ≤ 1.2 W/kg.

11.2.1 WLAN 2.4 GHz Main Antenna (Chain B) SAR Test Results

Mode	BW (MHz)	Ant.	Position	Ch.	Freq. (MHz)	Avg. Pwr. (dBm)	Max. Pwr. (dBm)	Meas. 1g SAR (W/kg)	Reported 1g SAR (W/kg)
802.11b 1 Mbps **1TX**	20	B	Back	1	2412	8.5	9.5	0.0787	**0.10**
	20	B	Top	1	2412	8.5	9.5	0.842	**1.06**
	20	B	Top	6	2437	8.35	9.5	0.864	**1.13**
	20	B	Top	11	2462	8.49	9.5	0.944	**1.19 (Plot 1)**
	20	B	Top w/ Keyboard	11	2462	8.49	9.5	0.92	**1.16**

11.2.2 WLAN 2.4 GHz MIMO Antenna (Chain A) SAR Test Results

Mode	BW (MHz)	Ant.	Position	Ch.	Freq. (MHz)	Avg. Pwr. (dBm)	Max. Pwr. (dBm)	Meas. 1g SAR (W/kg)	Reported 1g SAR (W/kg)
802.11b 1 Mbps **1TX**	20	A	Back	11	2462	8.93	9.5	0.113	**0.13**
	20	A	Top	1	2412	8.39	9.5	0.817	**1.05**
	20	A	Top	6	2437	8.77	9.5	0.869	**1.03**
	20	A	Top	11	2462	8.93	9.5	1.00	**1.14**
	20	A	Top	11	2462	8.93	9.5	1.02	**1.16 (Repeat)**
	20	A	Top w/ Keyboard	11	2462	8.93	9.5	1.01	**1.15**

11.3 WLAN 5 GHz SAR Testing Notes

In accordance with **KDB 248227 D01 v02r02 Section 5:**

- When the initial test channel had a reported SAR above 0.8 W/kg, the channel with next highest power was measured for SAR.
- Further channels in the initial test configuration were only measured when subsequent reported SAR values were above 1.2 W/kg.

- U-NII-1:
  - 802.11n HT40 was used as the initial test configuration since it has the highest bandwidth among the modes with the highest declared maximum output power.
  - No subsequent test configuration testing was required since the reported SAR of the initial test configuration was less than 1.2 W/kg.
- U-NII-2C:
  - 802.11ac VHT80 was used as the initial test configuration since it has the highest bandwidth among the modes with the highest declared maximum output power.
  - Testing was performed on subsequent test configuration of 802.11n HT40 when the reported SAR of the initial test configuration was greater than 1.2 W/kg.
  - Testing was performed on the next subsequent test configuration of 802.11a when 802.11n HT40 reported SAR was greater than 1.2 W/kg.
- U-NII-3:
  - 802.11n HT40 was used as the initial test configuration since it has the highest bandwidth among the modes with the highest declared maximum output power.
  - Testing was performed on subsequent test configuration of 802.11a when the reported SAR of the initial test configuration was greater than 1.2 W/kg.

11.3.1 WLAN 5.2 GHz Main Antenna (Chain B) SAR Test Results

Mode	BW (MHz)	Ant.	Position	Ch.	Freq. (MHz)	Avg. Pwr. (dBm)	Max. Pwr. (dBm)	Meas. 1g SAR (W/kg)	Reported 1g SAR (W/kg)
802.11n HT40 MCS0 **1TX**	40	B	Back	38	5190	8	9.5	0.0444	**0.06**
	40	B	Top	38	5190	8	9.5	0.654	**0.92**
	40	B	Top	46	5230	7.9	9.5	0.756	**1.09**
	40	B	Top w/ Keyboard	46	5230	7.9	9.5	0.641	**0.93**

11.3.2 WLAN 5.2 GHz MIMO Antenna (Chain A) SAR Test Results

Mode	BW (MHz)	Ant.	Position	Ch.	Freq. (MHz)	Avg. Pwr. (dBm)	Max. Pwr. (dBm)	Meas. 1g SAR (W/kg)	Reported 1g SAR (W/kg)
802.11n HT40 MCS0 **1TX**	40	A	Back	46	5230	8.1	9.5	0.0575	**0.08**
	40	A	Top	38	5190	7.95	9.5	0.688	**0.98**
	40	A	Top	46	5230	8.1	9.5	0.773	**1.07**
	40	A	Top w/ Keyboard	46	5230	8.1	9.5	0.833	**1.15 (Plot 2)**
	40	A	Top w/ Keyboard	46	5230	8.1	9.5	0.791	**1.09 (Repeat)**

11.3.3 WLAN 5.3 GHz SAR Test Results

According to **KDB 248227 v02r02 Section 5.3.1:**

When different maximum output power is specified for the U-NII-1 and U-NII-2A bands, begin SAR measurement in the band with the higher specified maximum output power. The highest reported SAR configuration is adjusted by the ratio of lower to higher specified maximum output power for the two bands. When the adjusted SAR is ≤ 1.2 W/kg, SAR is not required for the band with lower maximum output power in that test configuration.

Since the highest reported SAR in U-NII-1 is ≤ 1.2 W/kg, SAR testing was not performed in U-NII-2A.

11.3.4 WLAN 5.6 GHz Main Antenna (Chain B) SAR Test Results

Mode	BW (MHz)	Ant.	Position	Ch.	Freq. (MHz)	Avg. Pwr. (dBm)	Max. Pwr. (dBm)	Meas. 1g SAR (W/kg)	Reported 1g SAR (W/kg)
802.11ac HT80 MCS0 **1TX**	80	B	Back	122	5610	7.19	8.5	0.0931	**0.13**
	80	B	Top	106	5530	5.34	6.5	0.512	**0.67**
	80	B	Top	122	5610	7.19	8.5	0.975	**1.32**
	80	B	Top	138	5690	7.15	8.5	0.88	**1.20**
802.11n HT40 MSC0 **1TX**	40	B	Top	118	5590	7.21	8.5	0.851	**1.15**
	40	B	Top	126	5630	7.04	8.5	0.935	**1.31**
	40	B	Top	134	5670	7.18	8.5	0.995	**1.35**
	40	B	Top	134	5670	7.18	8.5	1.01	**1.37 (Plot 3) (Repeat)**
	40	B	Top w/ Keyboard	134	5670	7.18	8.5	0.972	**1.32**
	40	B	Top	142	5710	6.88	8.5	0.759	**1.10**
802.11a 6 Mbps **1TX**	20	B	Top	124	5620	7.13	8.5	0.969	**1.33**
	20	B	Top	128	5640	7.2	8.5	0.999	**1.35**
	20	B	Top	132	5660	7.21	8.5	0.995	**1.34**
	20	B	Top	136	5680	7.29	8.5	0.782	**1.03**

11.3.5 WLAN 5.6 GHz MIMO Antenna (Chain A) SAR Test Results

Mode	BW (MHz)	Ant.	Position	Ch.	Freq. (MHz)	Avg. Pwr. (dBm)	Max. Pwr. (dBm)	Meas. 1g SAR (W/kg)	Reported 1g SAR (W/kg)
802.11ac HT80 MCS0 **1TX**	80	A	Back	122	5610	7.18	8.5	0.0822	**0.11**
	80	A	Top	122	5610	7.18	8.5	0.485	**0.66**
	80	A	Top w/ Keyboard	122	5610	7.18	8.5	0.423	**0.57**

11.3.6 WLAN 5.8 GHz Main Antenna (Chain B) SAR Test Results

Mode	BW (MHz)	Ant.	Position	Ch.	Freq. (MHz)	Avg. Pwr. (dBm)	Max. Pwr. (dBm)	Meas. 1g SAR (W/kg)	Reported 1g SAR (W/kg)
802.11n HT40 MCS0 **1TX**	40	B	Back	151	5755	8.45	9.5	0.104	**0.13**
	40	B	Top	151	5755	8.45	9.5	1.01	**1.29**
	40	B	Top	159	5795	8.44	9.5	0.819	**1.05**
802.11a 6 Mbps **1TX**	20	B	Top	149	5745	8.56	9.5	1.09	**1.35**
	20	B	Top w/ Keyboard	149	5745	8.56	9.5	1.11	**1.38 (Plot 4)**
	20	B	Top w/ Keyboard	149	5745	8.56	9.5	1.10	**1.37 (Repeat)**
	20	B	Top	153	5765	8.51	9.5	1.03	**1.29**

11.3.7 WLAN 5.8 GHz MIMO Antenna (Chain A) SAR Test Results

Mode	BW (MHz)	Ant.	Position	Ch.	Freq. (MHz)	Avg. Pwr. (dBm)	Max. Pwr. (dBm)	Meas. 1g SAR (W/kg)	Reported 1g SAR (W/kg)
802.11n HT40 MCS0 **1TX**	40	A	Back	151	5755	8.87	9.5	0.111	**0.13**
	40	A	Top	151	5755	8.87	9.5	0.617	**0.71**
	40	A	Top	151	5755	8.87	9.5	0.538	**0.62**

11.4 Bluetooth SAR Test Results

Mode	Ant.	Position	Ch.	Freq. (MHz)	Avg. Pwr. (dBM)	Max. Pwr. (dBm)	Meas. 1g SAR (W/kg)	Reported 1g SAR (W/kg)
BT 1-DH5	B	Top	0	2402	4.5	5.5	0.314	**0.40**

12 Repeated SAR Measurements

SAR measurements are repeated according to the rules of **KDB 865664 D01 v01r04 Section 2.8.1 SAR measurement variability**. SAR measurement variability must be assessed for each frequency band. The repeated measurement results below and their reported SAR values are also shown in the previous section, but are again shown here to demonstrate compliance with the requirement.

1) Repeated measurement is not required when the original highest measured SAR is < 0.80 W/kg; steps 2) through 4) do not apply.

2) When the original highest measured SAR is ≥ 0.80 W/kg, repeat that measurement once.

3) Perform a second repeated measurement only if the ratio of largest to smallest SAR for the original and first repeated measurements is > 1.20 or when the original or repeated measurement is ≥ 1.45 W/kg (~ 10% from the 1-g SAR limit).

4) Perform a third repeated measurement only if the original, first or second repeated measurement is ≥ 1.5 W/kg and the ratio of largest to smallest SAR for the original, first and second repeated measurements is > 1.20.

12.1 SAR Variability Repeat Measurements

Band (GHz)	Mode	BW (MHz)	Ant.	Position	Ch.	Freq. (MHz)	Orig. 1-g SAR Meas. (W/kg	Repeat 1-g SAR Meas. (W/kg)	Largest / Smallest Ratio
2.4	802.11b 1TX	20	A	Top	11	2462	1.00	1.02	**1.02**
5.2	802.11n 1TX	40	A	Top w/ Keyboard	46	5230	0.833	0.791	**1.05**
5.6	802.11n 1TX	40	B	Top	134	5670	0.995	1.01	**1.02**
5.8	802.11a	20	B	Top w/ Keyboard	149	5745	1.11	1.10	**1.01**

13 Simultaneous Transmission Evaluation

(**KDB 447498 D01 v06**) Simultaneous transmission SAR must be considered for all operating configurations and exposure conditions in which separate antennas can transmit signals at the same time. All such simultaneous transmission configurations must be shown to be compliant, which can be done in any of the following three ways:

1. The sum of the highest standalone *Reported* SAR values from each antenna in the configuration is less than the SAR limit.
2. The SAR to peak location separation ratio is ≤ 0.04. This ratio is calculated as:

$$\frac{(Reported\ SAR^{Antenna1} + Reported\ SAR^{Antenna2})^{1.5}}{Distance\ Beetween\ Antenna\ 1\ and\ Antenna\ 2\ peak\ SAR\ locations\ in\ mm}$$

3. When neither 1 nor 2 suffice, simultaneous transmission must be measured either by volume scans or multiple zoom scans so that each applicable air interface is tested at all antenna locations in question. The separate scans from the simultaneously transmitting antennas are then summed together point by point to obtain the simultaneous transmission measured SAR value. The reported simultaneous transmission SAR value must be less than the limit.

According to **KDB 248227 D01 WiFi SAR v02r02 Section 6.5**:

The simultaneous transmission SAR test exclusion provisions in KDB publication 447498 can be applied to avoid simultaneous transmission SAR measurement or to reduce the number of tests…To correctly apply simultaneous transmission SAR test exclusion, the reported standalone SAR results must be examined according to all combinations of channel bandwidths, maximum output power, 802.11 transmission modes frequency bands, exposure configurations, and test positions to determine if certain combinations may be considered collectively to apply the SAR test exclusion procedures according to the highest reported SAR for the group.

13.1 Important Standalone SAR values for Simultaneous Transmission Evaluation

The highest standalone values for each antenna and test position combination are listed here. These combinations represent the most conservative simultaneous transmission cases within each band even though some combinations evaluated will not actually transmit at the same time (ie, when the highest case within a band occurs in a different mode or channel for each antenna).

Band	Test Position	Air Interface	Ch.	Freq. (MHz)	Ant.	Peak SAR Location Coordinates (mm from Phantom origin)			Reported SAR (W/kg)
						X	Y	Z	
WLAN 2.4 GHz	Back	802.11b	11	2462	A	NA			0.13
	Top	802.11b	11	2462	A	-7.0	57.0	-0.45	1.16
	Top with Keyboard	802.11b	11	2462	A	1.0	-54.0	-0.48	1.15
	Back	802.11b	1	2412	B	NA			0.10
	Top	802.11b	11	2462	B	-5.0	-86.0	-0.06	1.19
	Top w/ KB	802.11b	11	2462	B	1.0	85.0	-0.23	1.16
U-NII-1	Back	802.11n	46	5230	A	NA			0.08
	Top	802.11n	46	5230	A	0.40	43.2	-0.91	1.07
	Top w/ KB	802.11n	46	5230	A	4.5	-65.5	-0.45	1.15
	Back	802.11n	38	5190	B	NA			0.06
	Top	802.11n	46	5230	B	0.2	-96.2	-0.08	1.09
	Top w/ KB	802.11n	46	5230	B	7.5	98.5	0.17	0.93
U-NII-2A	No Measurements Required								
U-NII-2C	Back	802.11ac	122	5610	A	NA			0.11
	Top	802.11ac	122	5610	A	2.4	44.0	2.43	0.66
	Top w/ KB	802.11ac	122	5610	A	-13.6	46.4	2.59	0.57
	Back	802.11ac	122	5610	B	NA			0.13
	Top	802.11n	134	5670	B	-6.0	-96.8	2.6	1.37
	Top w/ KB	802.11n	134	5670	B	-14.0	-94.4	2.41	1.32
U-NII-3	Back	802.11n	151	5755	A	NA			0.13
	Top	802.11n	151	5755	A	-0.8	47.2	2.22	0.71
	Top w/ KB	802.11n	151	5755	A	-16.0	48.8	2.9	0.62
	Back	802.11n	151	5755	B	NA			0.13
	Top	802.11a	149	5745	B	-2.8	-92.8	2.57	1.35
	Top w/ KB	802.11a	149	5745	B	-6.8	-94.4	2.25	1.38
2.4 GHz	Top	Bluetooth	0	2402	B	0.00	-85.0	0.12	0.40

13.2 Illustration of Peak Locations Required for SPLSR Analysis

13.2.1 Top 0mm / Ant B 802.11b Ch. 11 / Ant A 802.11b Ch. 11

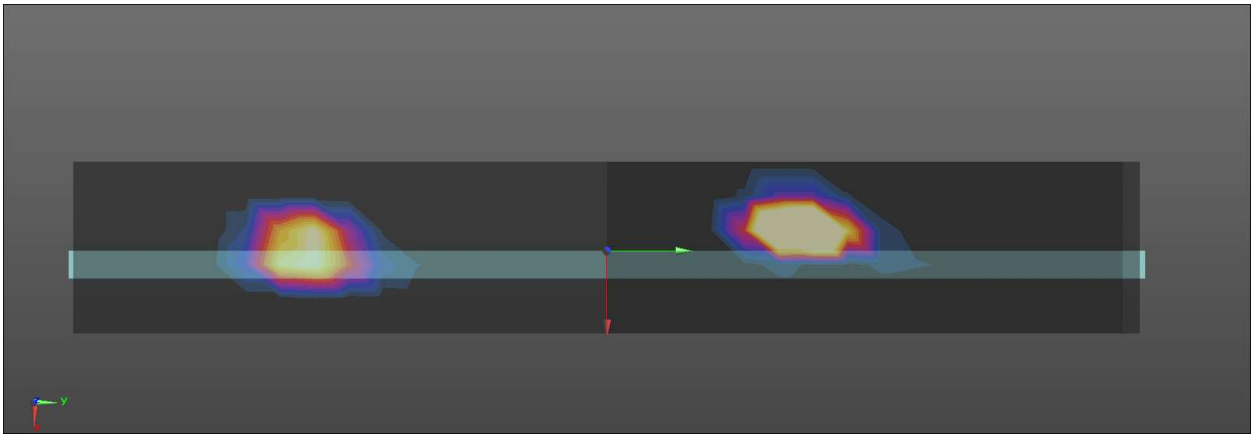

13.2.2 Top 0mm with Keyboard / Ant B 802.11b Ch. 11 / Ant A 802.11b Ch. 11

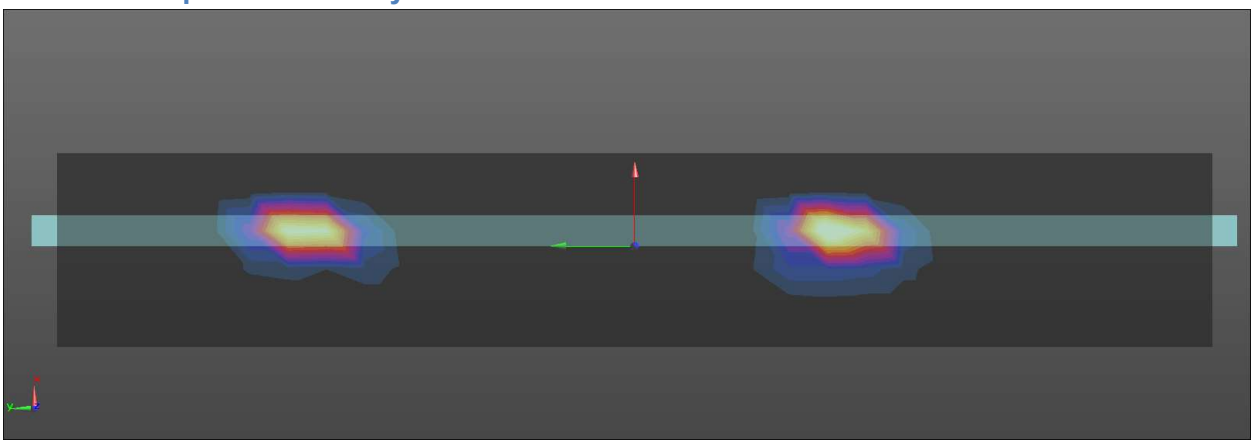

13.2.3 Top 0mm / Ant B 802.11n HT40 Ch. 46 / Ant A 802.11n HT40 Ch. 46

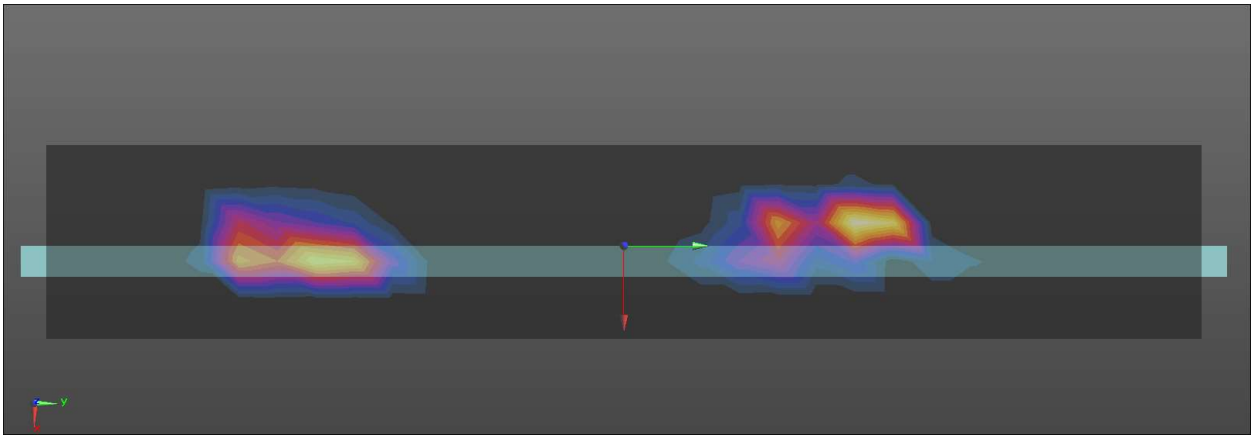

13.2.1 Top 0mm w/ Keyboard / Ant B 802.11n HT40 Ch. 46 / Ant A 802.11n HT40 Ch. 46

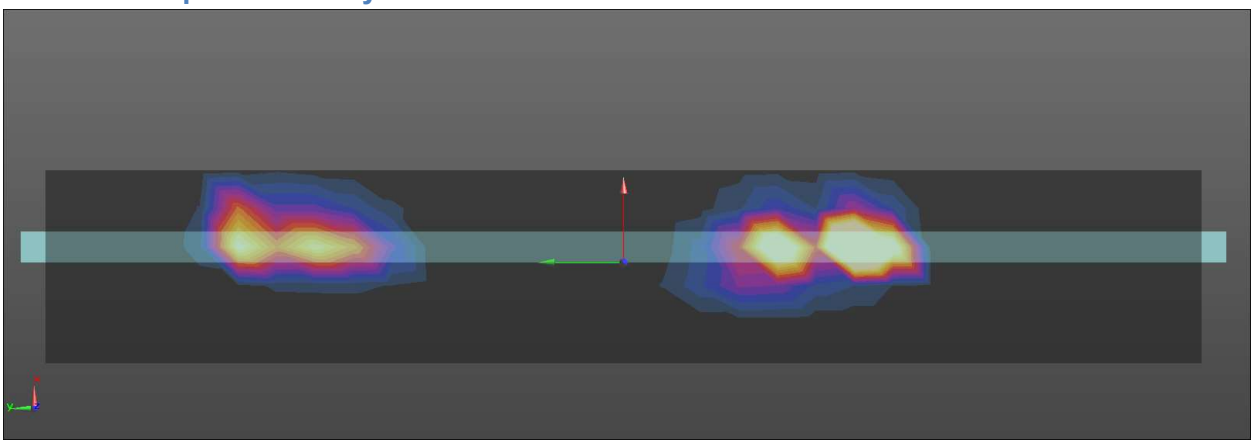

13.3 Estimated Standalone SAR for Simultaneous Transmission Evaluation

According to **KDB 447498 D01 Section 4.3.2.2)**

When the standalone SAR test exclusion of section 4.3.1 is applied to an antenna that transmits simultaneously with other antennas, the standalone SAR must be estimated according to the following to determine simultaneous transmission SAR test exclusion:

• (*max. power of channel, including tune-up tolerance, mW*)/(*min. test separation distance, mm*)]·[√f(GHz)/*x*] W/kg for *test separation distances* ≤ 50 mm;
where *x* = 7.5 for 1-g SAR, and *x* = 18.75 for 10-g SAR.

Using the above, the Bluetooth SAR from Antenna B is estimated as:

(3.55 mW) / (5mm) * (√2.48)/7.5 = 0.15 W/kg

Mode	Ant.	Position	Freq. (GHz)	Max Power (mW)	Min. Test Separation Distance (mm)	Estimated SAR (W/kg)
Bluetooth	B	Back	2.48	4	5	**0.15**

13.4 Simultaneous Transmission Evaluation Results

13.4.1 WLAN (Antenna B) + WLAN (Antenna A) Simultaneous Transmission Analysis

Exposure Condition	Test Position	SAR Value (W/kg)		Peak Location Sep. Distance (mm)	Simultaneous Transmission Evaluation Method Used	Result
		Main Antenna (Chain B)	MIMO Antenna (Chain A)			
2.4 GHz WLAN (Antenna B) + 2.4 GHz WLAN (Antenna A)						
Body	Back	0.10	0.13	NA	Sum	0.23 W/kg Pass
	Top	1.19	1.16	143.0	SPLSR	SPLSR=0.025 Pass
	Top w/ Keyboard	1.16	1.15	139.0	SPLSR	SPLSR=0.025 Pass
U-NII-1 (Antenna B) + U-NII-1 (Antenna A)						
Body	Back	0.06	0.08	NA	Sum	0.14 W/kg Pass
	Top	1.09	1.07	139.4	SPLSR	SPLSR=0.023 Pass
	Top w/ Keyboard	0.93	1.15	164.0	SPLSR	SPLSR=0.018 Pass
U-NII-2C (Antenna B) + U-NII-2C (Antenna A)						
Body	Back	0.13	0.11	NA	Sum	0.24 W/kg Pass
	Top	1.37	0.66	141.0	SPLSR	SPLSR=0.021 Pass
	Top w/ Keyboard	1.32	0.57	140.8	SPLSR	SPLSR=0.018 Pass
U-NII-3 (Antenna B) + U-NII-3 (Antenna A)						
Body	Back	0.13	0.13	N/A	SUM	0.26 W/kg Pass
	Top	1.35	0.71	140.0	SPLSR	SPLSR=0.021 Pass
	Top w/ Keyboard	1.38	0.62	143.5	SPLSR	SPLSR=0.020 Pass

13.4.2 Bluetooth (Antenna B) + WLAN (Antenna A) Simultaneous Transmission Analysis

Exposure Condition	Test Position	SAR Value (W/kg)		Peak Location Sep. Distance (mm)	Simultaneous Transmission Evaluation Method Used	Result
		Main Antenna (Chain B)	MIMO Antenna (Chain A)			
Bluetooth (Antenna B) + 2.4 GHz WLAN (Antenna A)						
Body	Back	0.15	0.13	NA	Sum	0.28 W/kg Pass
	Top	0.40	1.16	142.17	Sum	1.56 W/kg Pass
	Top w/ Keyboard	0.40*	1.15	NA	Sum	1.55 W/kg Pass
Bluetooth (Antenna B) + U-NII-2A (Antenna A)						
Body	Back	0.15	0.08	NA	Sum	0.23 W/kg Pass
	Top	0.40	1.07	NA	Sum	1.47 W/kg Pass
	Top w/ Keyboard	0.40*	1.15	NA	Sum	1.55 W/kg Pass
Bluetooth (Antenna B) + U-NII-2C (Antenna A)						
Body	Back	0.15	0.11	NA	Sum	0.26 W/kg Pass
	Top	0.40	0.66	NA	Sum	1.06 W/kg Pass
	Top w/ Keyboard	0.40*	0.57	NA	Sum	0.97 W/kg Pass
Bluetooth (Antenna B) + U-NII-3 (Antenna A)						
Body	Back	0.15	0.13	NA	Sum	0.28 W/kg Pass
	Top	0.40	0.71	NA	Sum	1.11 W/kg Pass
	Top w/ Keyboard	0.40*	0.62	NA	Sum	1.02 W/kg Pass

*Since the estimated SAR equation would give 0.15 W/kg for Bluetooth Top with Keyboard, the 0.40 W/kg value from the measured Bluetooth Top SAR without keyboard is instead used to be more conservative since Top and Top w/Keyboard show only small differences which can be attributed to measurement uncertainty.

14 SAR System Verification

System Verifications were performed in accordance with **IEEE 1528-2013** and **KDB 865664 D01 v01r04.** Verifications were performed for each frequency band and within the valid range of each probe calibration point required for testing the device. The same SAR probe(s) and tissue-equivalent liquid combinations used with each SAR system for system verification were used for device testing. Verifications were performed before each series of SAR measurements using the same calibration point and tissue-equivalent medium and every three days thereafter when necessary.

The test setup diagram is shown below. A CW signal is created by a signal generator and fed through a power amplifier with directional coupler outputs. The forward output power is adjusted to 20 dBm while the coupled output power is normalized to 0dB for easy monitoring. When the forward power is attached to the dipole, the power is then adjusted if necessary so that the coupled channel again reads 0 dB on the power meter. Tissue-simulating liquid depth in the phantom is maintained to be at least 15 cm for frequencies below 3 GHz and 10 cm for frequencies above 5 GHz.

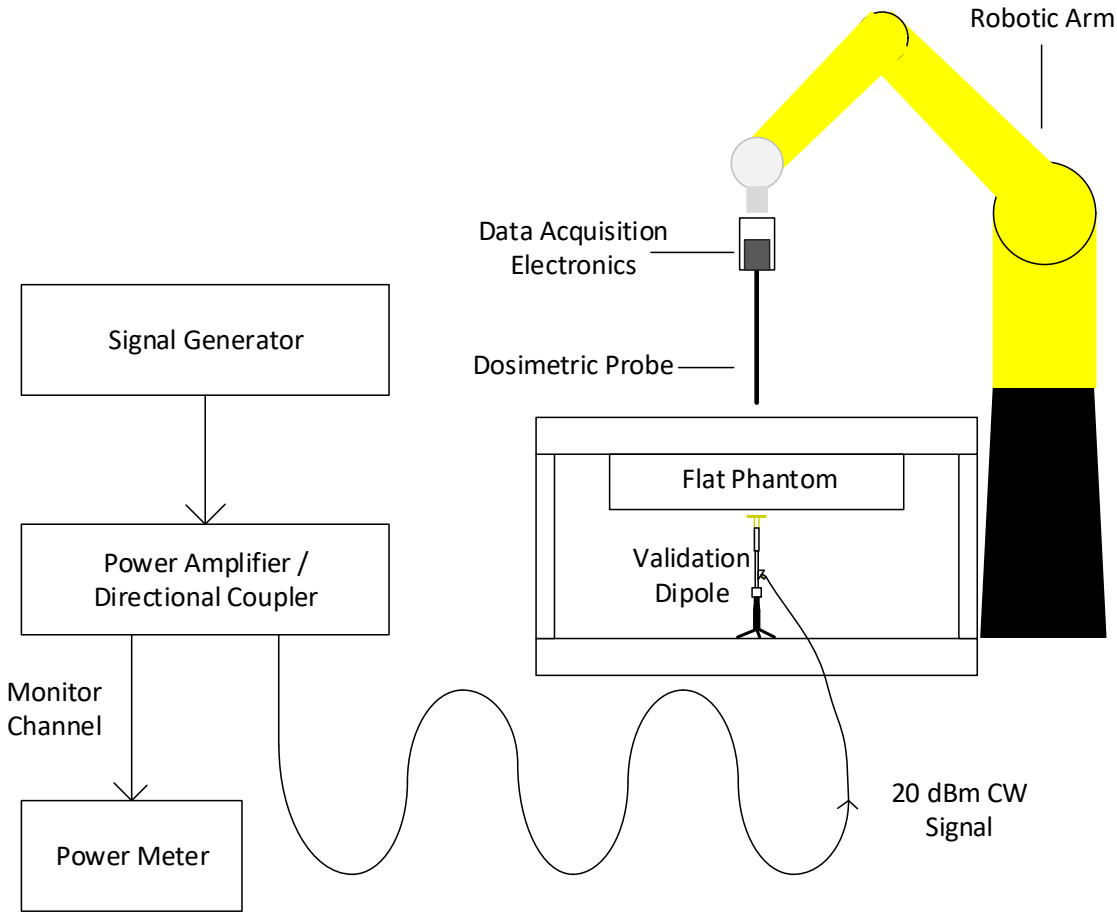

System Verification Setup

14.1 SAR System Verification Results

All verifications are performed with a 100 mW (20 dBm) input to the dipole. The resultant measured SAR is normalized to 1 W (30 dBm) for comparison to calibrated dipole targets. All normalized SAR system verification results were within 10% of the respective dipole target values.

Date	Tissue-Sim. Liquid	Probe SN	Dipole	Freq. (MHz)	Meas. 1-g SAR (W/kg)	Norm. 1-g SAR (W/kg)	Dipole Target 1-g SAR (W/kg)	Dev. from Target 1-g SAR (%)
8/7/2017	MSL	3940	D2450V2_917	2450	5.24	52.4	50.6	**3.56 (Plot 5)**
8/14/2017	MSL	3940	D5GHzV2_1159	5250	7.68	76.8	76.5	**0.39 (Plot 6)**
8/7/2017	MSL	3939	D5GHzV2_1159	5600	8.50	85.0	79.8	**6.52 (Plot 7)**
8/18/2017	MSL	3939	D5GHzV2_1159	5600	7.87	78.7	79.8	**-1.38**
8/14/2017	MSL	3939	D5GHzV2_1159	5750	7.54	75.4	76.9	**-1.95 (Plot 8)**
8/17/2017	MSL	3939	D5GHzV2_1159	5750	7.63	76.3	76.9	**-0.78**

15 Tissue-Simulating Liquid Verification

(KDB 854664 D01 v01r04 Section 2.4) The tissue dielectric parameters of tissue-equivalent media used for SAR measurements must be characterized within a temperature range of 18°C to 25°C, measured with calibrated instruments and apparatuses, such as network analyzers and temperature probes. The temperature of the tissue-equivalent medium during SAR measurement must also be within 18°C to 25°C and within ± 2°C of the temperature when the tissue parameters are characterized. The tissue dielectric measurement system must be calibrated before use. The dielectric parameters must be measured before the tissue-equivalent medium is used in a series of SAR measurements. The parameters should be re-measured after each 3 – 4 days of use; or earlier if the dielectric parameters can become out of tolerance; for example, when the parameters are marginal at the beginning of the measurement series.

The target parameters for the tissue-simulating liquids are obtained from the following table from KDB 865664 D01:

Target Frequency	Head		Body	
(MHz)	ε_r	σ (S/m)	ε_r	σ (S/m)
150	52.3	0.76	61.9	0.80
300	45.3	0.87	58.2	0.92
450	43.5	0.87	56.7	0.94
835	41.5	0.90	55.2	0.97
900	41.5	0.97	55.0	1.05
915	41.5	0.98	55.0	1.06
1450	40.5	1.20	54.0	1.30
1610	40.3	1.29	53.8	1.40
1800 – 2000	40.0	1.40	53.3	1.52
2450	39.2	1.80	52.7	1.95
3000	38.5	2.40	52.0	2.73
5800	35.3	5.27	48.2	6.00

(ε_r = relative permittivity, σ = conductivity and ρ = 1000 kg/m^3)

15.1 Tissue-Simulating Liquid Ingredients and Maintenance

The Tissue-simulating liquids were manufactured by SPEAG. The following information on the maintenance of

MSL 2450 Ingredients: Water, DGBE

MBBL 3500 – 5800 Ingredients: Water, Mineral Oil, Emulsifiers, Sodium Chloride

DGBE BASED LIQUIDS
DGBE is easily dissolved in water. Given a DGBE-water mixture, mainly water will evaporate, however DGBE will evaporate to a smaller percentage. For the frequency liquids around 2.5 GHz, no NaCl is contained and should therefore not be added for any corrections.
Evaporated water can be replaced and will mainly increase the permittivity, and to a small extent the conductivity, typically as follows:

HSLxxxxV2: permittivity 0.8 to 1.0 per % of water, conductivity 0 to 0.1 per % of water

MSLxxxxV2: permittivity 0.8 per % of water, conductivity 0 to 0.01 per % of water

OIL BASED LIQUIDS
Oil based liquids are an emulsion of a complex mixture of ingredients. Their appearance is yellow or brown transparent or slightly opaque / milky in most cases. Some older liquids may show a non-transparent upper zone with a creamy appearance after some time without stirring. Before using or handling the liquid, it must therefore be stirred to become entirely homogeneous. An opaque appearance is possible but will not influence the dielectric parameters if it is homogeneous during the measurement at the probe surface.
Evaporated water can be replaced and will increase the permittivity, and to a smaller extent the conductivity.

The **sensitivities to water addition** (% parameter increase per weight% water added) of oil based SPEAG broadband tissue simulating liquids at the frequencies of interest are typically in the following range:

HBBL3500-5800V5	at 3.5 GHz:	permittivity 0.79, conductivity 0.14
	at 5.5 GHz:	permittivity 0.83, conductivity 0.41
MBBL3500-5800V5	at 3.5 GHz:	permittivity 0.44, conductivity 0.00
	at 5.5 GHz:	permittivity 0.48, conductivity 0.18

The **temperature gradients** shall be observed especially during conductivity measurement:

HBBL3500-5800V5	at 3.5 GHz:	permittivity -0.07, conductivity -0.43 %/°C
	at 5.5 GHz:	permittivity -0.23, conductivity -0.96 %/°C
MBBL3500-5800V5	at 3.5 GHz:	permittivity -0.35, conductivity -1.14 %/°C
	at 5.5 GHz:	permittivity -0.08, conductivity -1.52 %/°C

15.2 Tissue-Simulating Liquid Measurements

Date	Tissue-Simulating Liquid	Freq. (MHz)	Rel. Perm. ε'_r	Target ε'_r	ε'_r Dev. %	Cond. σ (S/m)	Target σ (S/m)	σ Dev. %
8/7/2017	MBBL 600-6000 160204-2 22.1 °C	2400	53.79	52.70	2.07	1.963	1.92	2.24
		2412	53.75	52.75	1.90	1.972	1.91	3.25
		2437	53.72	52.72	1.90	1.995	1.94	2.84
		2450	53.70	52.70	1.90	2.007	1.95	2.92
		2462	53.70	52.68	1.90	2.017	1.97	2.39
		2480	53.67	52.66	1.92	2.032	1.99	2.11
8/14/2017	MBBL 600-6000 160204-2 22.5 °C	5180	47.56	49.0	-2.94	5.276	5.28	-0.08
		5200	47.52	49.0	-3.02	5.307	5.30	0.13
		5250	47.42	48.95	-3.13	5.383	5.36	0.43
		5260	47.41	48.90	-3.05	5.395	5.37	0.47
8/7/2017	MBBL 600-6000 160204-3 22.1 °C	5500	46.60	48.61	-4.13	5.828	5.65	3.15
		5600	46.39	48.47	-4.29	5.979	5.77	3.62
		5700	46.20	48.34	-4.43	6.132	5.88	4.29
8/14/2017	MBBL 600-6000 160204-3 21.6 °C	5700	47.70	48.34	-1.32	5.713	5.88	-2.84
		5800	47.51	48.20	-1.43	5.858	6.00	-2.37
		5825	47.50	48.17	-1.39	5.892	6.00	-1.80
8/17/2017	MBBL 600-6000 160204-3 21.4 °C	5700	48.20	48.34	-0.29	5.692	5.88	-3.20
		5800	47.95	48.20	-0.52	5.826	6.00	-2.90
		5825	47.87	48.17	-0.62	5.857	6.00	-2.38
8/18/2017	MBBL 600-6000 160204-3 21.6 °C	5500	47.87	48.61	-1.52	5.701	5.65	0.90
		5600	47.67	48.47	-1.65	5.852	5.77	1.42
		5700	47.46	48.34	-1.82	6.00	5.88	2.04

16 System Specification

16.1 SPEAG DASY5 SYSTEM

DASY 5 system performing SAR testing contains the following items, which are illustrated in the figure below.

- 6-axis robot (model: TX90XL) with controller and teach pendant.
- Dosimetric E-field probe.
- Light beam unit which allows automatic “tooling” of the probe.
- The electro-optical convertor (EOC) which is mounted on the robot arm.
- The data acquisition electronics (DAE).
- Elliptical Phantom
- Device holder.
- Remote control.
- PC.
- DASY5 software.
- Validation dipole.

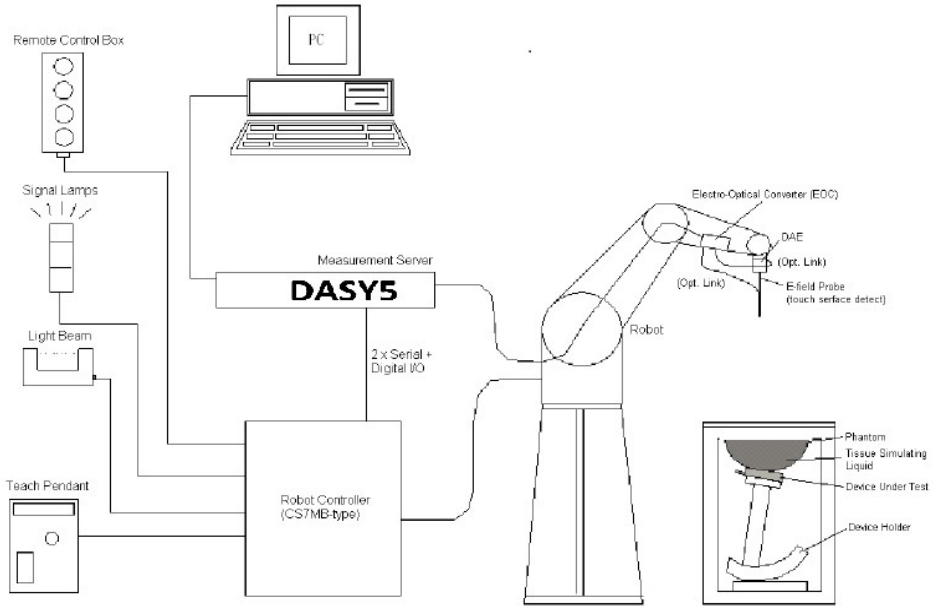

DASY5 System Setup

17 Measurement Uncertainty

KDB 865664 D01 v01r04 section 2.8.2 says:

Extensive SAR measurement uncertainty analysis is required in SAR reports only when the highest measured SAR in a frequency band is ≥ 1.5 W/kg for 1-g SAR.

The highest **measured** 1-g SAR in this report is 1.11. W/kg. Therefore, SAR measurement uncertainty analysis is not required for this report.

Overall SAR system measurement uncertainty is less than 30% with a confidence factor k=2 in order to meet standard requirements.

18 Appendices

The following are contained in the attached appendices:

- Highest SAR Test and SAR System Verification Plots
- SAR Test Setup Photos
- Calibration Report Documents for:
  - Validation Dipole D2450V2-917_Apr17
  - Validation Dipole D5GHzV2-1159_Apr17
  - Dosimetric Probe EX3-DV4-3939_Apr17
  - Dosimetric Probe EX3-DV4-3940_Jul17

End of Test Report