Appendix A. SAR Plots of System Verification

The plots for system verification are shown as follows.

S01 System Check_H2450_210510

DUT: Dipole 2450 MHz; Type: D2450V2; SN: 737

Communication System: UID 0, CW; Frequency: 2450 MHz;Duty Cycle: 1:1
Medium: H19T27N1_0510 Medium parameters used (interpolated): f = 2450 MHz; σ = 1.884 S/m; ε_r = 39.285; ρ = 1000 kg/m^3
Ambient Temperature：23.6 ℃ ; Liquid Temperature：23.1 ℃

DASY5 Configuration:
- Probe: EX3DV4 - SN3971; ConvF(7.87, 7.87, 7.87) @ 2450 MHz; Calibrated: 2021/01/27
- Sensor-Surface: 1.4mm (Mechanical Surface Detection)
- Electronics: DAE4 Sn1431; Calibrated: 2021/03/24
- Phantom: ELI Phantom_1245; Type: QDOVA002AA;
- Measurement SW: DASY52, Version 52.10 (4); SEMCAD X Version 14.6.14 (7483)

Pin=50mW/Area Scan (81x81x1): Interpolated grid: dx=1.200 mm, dy=1.200 mm
Maximum value of SAR (interpolated) = 3.86 W/kg

Pin=50mW/Zoom Scan (7x7x7)/Cube 0: Measurement grid: dx=5mm, dy=5mm, dz=5mm
Reference Value = 47.05 V/m; Power Drift = -0.08 dB
Peak SAR (extrapolated) = 4.78 W/kg
SAR(1 g) = 2.33 W/kg; SAR(10 g) = 1.2 W/kg (SAR corrected for target medium)
Maximum value of SAR (measured) = 3.89 W/kg

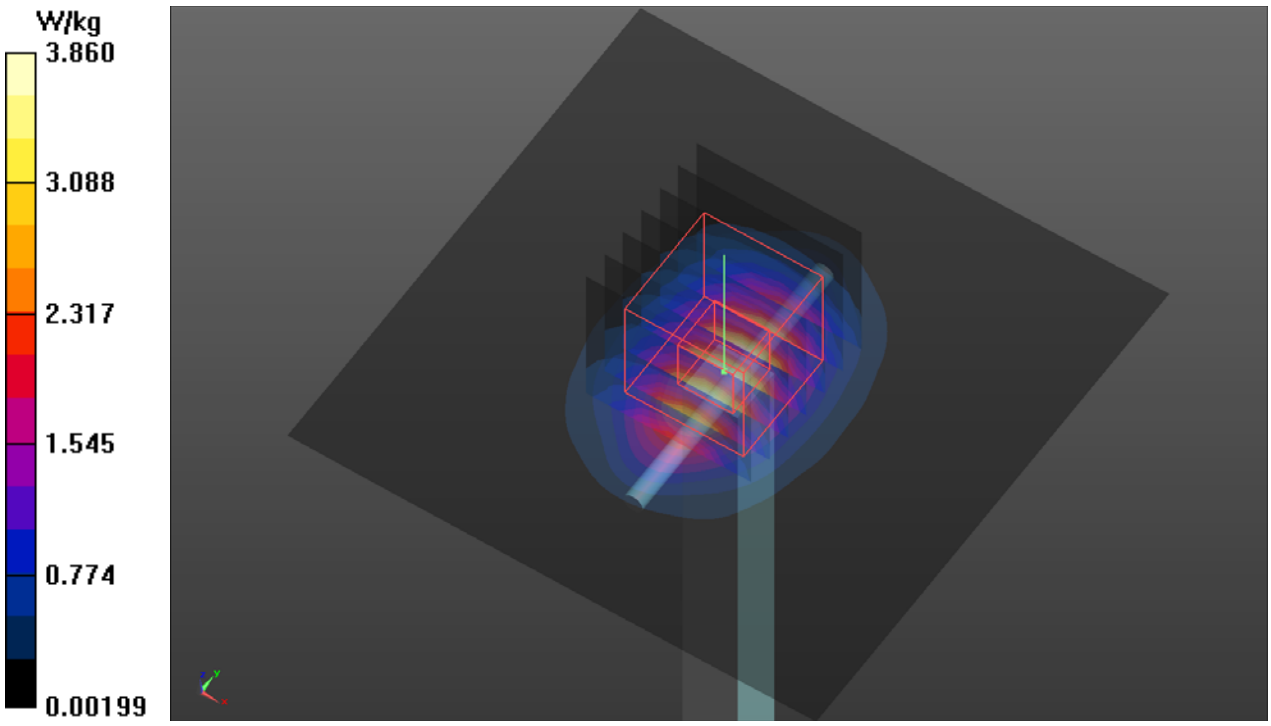

S02 System Check_H5250_210628

DUT: Dipole 5 GHz; Type: D5GHzV2; SN: 1019

Communication System: UID 0, CW; Frequency: 5250 MHz;Duty Cycle: 1:1
Medium: H34T60N1_0628 Medium parameters used (interpolated): f = 5250 MHz; σ = 4.519 S/m; ε_r = 37.125; ρ = 1000 kg/m^3
Ambient Temperature：23.7 ℃ ; Liquid Temperature：23.2 ℃

DASY5 Configuration:
- Probe: EX3DV4 - SN3887; ConvF(4.71, 4.71, 4.71) @ 5250 MHz; Calibrated: 2020/10/22
- Sensor-Surface: 1.4mm (Mechanical Surface Detection)
- Electronics: DAE4 Sn861; Calibrated: 2021/04/14
- Phantom: ELI Phantom_1043_P1aP2a; Type: QD OVA 002 Ax;
- Measurement SW: DASY52, Version 52.10 (4); SEMCAD X Version 14.6.14 (7483)

Pin=50mW/Area Scan (91x91x1): Interpolated grid: dx=1.000 mm, dy=1.000 mm
Maximum value of SAR (interpolated) = 8.44 W/kg

Pin=50mW/Zoom Scan (7x7x7)/Cube 0: Measurement grid: dx=4mm, dy=4mm, dz=1.4mm
Reference Value = 43.82 V/m; Power Drift = -0.02 dB
Peak SAR (extrapolated) = 14.3 W/kg
SAR(1 g) = 3.67 W/kg; SAR(10 g) = 1.06 W/kg (SAR corrected for target medium)
Maximum value of SAR (measured) = 9.02 W/kg

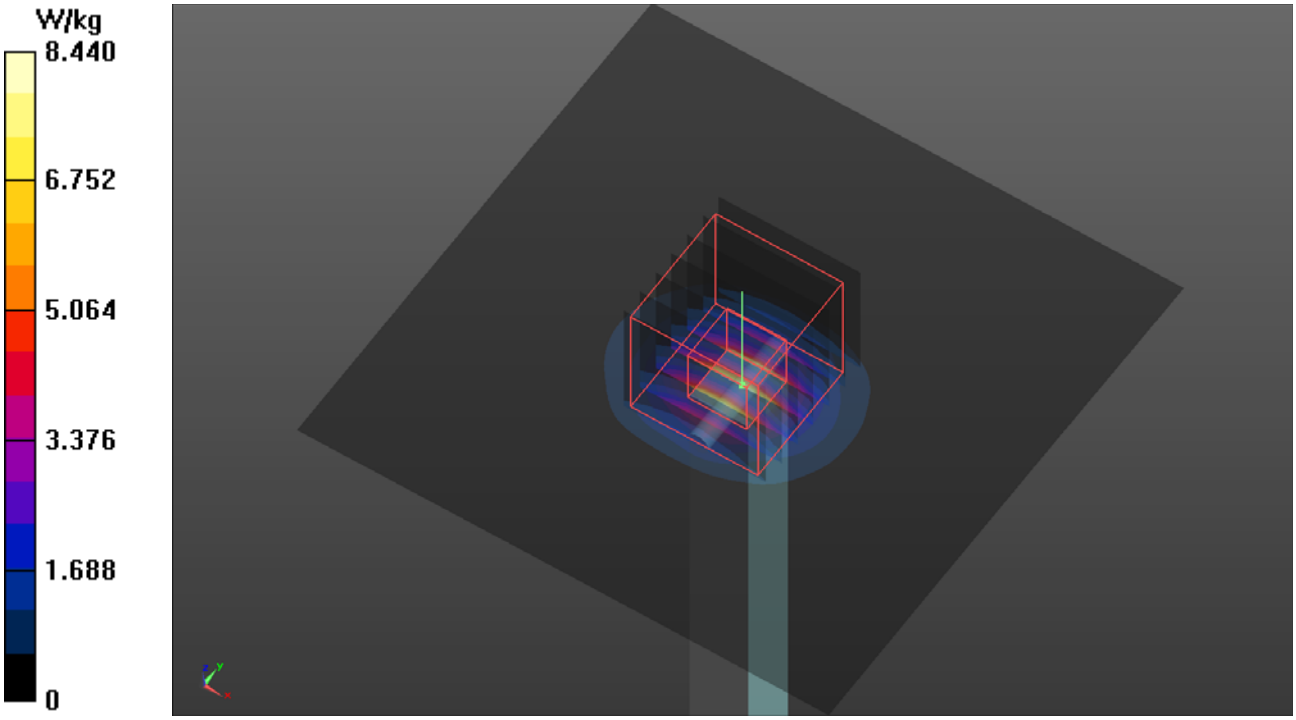

S03 System Check_H5250_210518

DUT: Dipole 5 GHz; Type: D5GHzV2; SN: 1019

Communication System: UID 0, CW; Frequency: 5250 MHz;Duty Cycle: 1:1
Medium: H34T60N1_0518 Medium parameters used: f = 5250 MHz; σ = 4.701 S/m; ε_r = 36.243; ρ = 1000 kg/m^3
Ambient Temperature：23.6 ℃ ; Liquid Temperature：23.3 ℃

DASY5 Configuration:
- Probe: EX3DV4 - SN3971; ConvF(5.2, 5.2, 5.2) @ 5250 MHz; Calibrated: 2021/01/27
- Sensor-Surface: 1.4mm (Mechanical Surface Detection)
- Electronics: DAE4 Sn1431; Calibrated: 2021/03/24
- Phantom: ELI Phantom_1245; Type: QDOVA002AA;
- Measurement SW: DASY52, Version 52.10 (4); SEMCAD X Version 14.6.14 (7483)

Pin=50mW/Area Scan (91x91x1): Interpolated grid: dx=1.000 mm, dy=1.000 mm
Maximum value of SAR (interpolated) = 8.73 W/kg

Pin=50mW/Zoom Scan (7x7x7)/Cube 0: Measurement grid: dx=4mm, dy=4mm, dz=1.4mm
Reference Value = 49.19 V/m; Power Drift = 0.13 dB
Peak SAR (extrapolated) = 14.3 W/kg
SAR(1 g) = 3.86 W/kg; SAR(10 g) = 1.12 W/kg (SAR corrected for target medium)
Maximum value of SAR (measured) = 9.40 W/kg

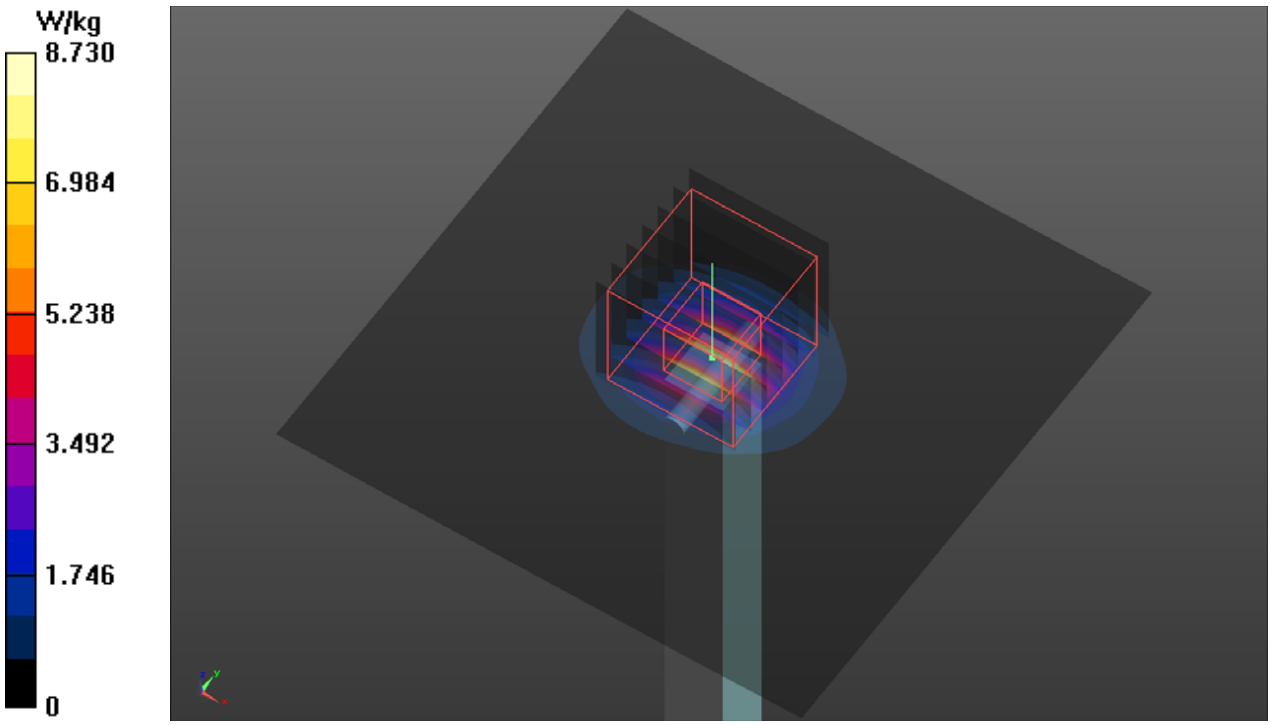

S04 System Check_H5600_210518

DUT: Dipole 5 GHz; Type: D5GHzV2; SN: 1019

Communication System: UID 0, CW; Frequency: 5600 MHz;Duty Cycle: 1:1
Medium: H34T60N1_0518 Medium parameters used: f = 5600 MHz; σ = 5.124 S/m; ε_r = 35.657; ρ = 1000 kg/m^3
Ambient Temperature：23.6 ℃ ; Liquid Temperature：23.3 ℃

DASY5 Configuration:
- Probe: EX3DV4 - SN3971; ConvF(4.9, 4.9, 4.9) @ 5600 MHz; Calibrated: 2021/01/27
- Sensor-Surface: 1.4mm (Mechanical Surface Detection)
- Electronics: DAE4 Sn1431; Calibrated: 2021/03/24
- Phantom: ELI Phantom_1245; Type: QDOVA002AA;
- Measurement SW: DASY52, Version 52.10 (4); SEMCAD X Version 14.6.14 (7483)

Pin=50mW/Area Scan (91x91x1): Interpolated grid: dx=1.000 mm, dy=1.000 mm
Maximum value of SAR (interpolated) = 9.10 W/kg

Pin=50mW/Zoom Scan (7x7x7)/Cube 0: Measurement grid: dx=4mm, dy=4mm, dz=1.4mm
Reference Value = 45.17 V/m; Power Drift = -0.11 dB
Peak SAR (extrapolated) = 15.7 W/kg
SAR(1 g) = 3.79 W/kg; SAR(10 g) = 1.12 W/kg (SAR corrected for target medium)
Maximum value of SAR (measured) = 9.60 W/kg

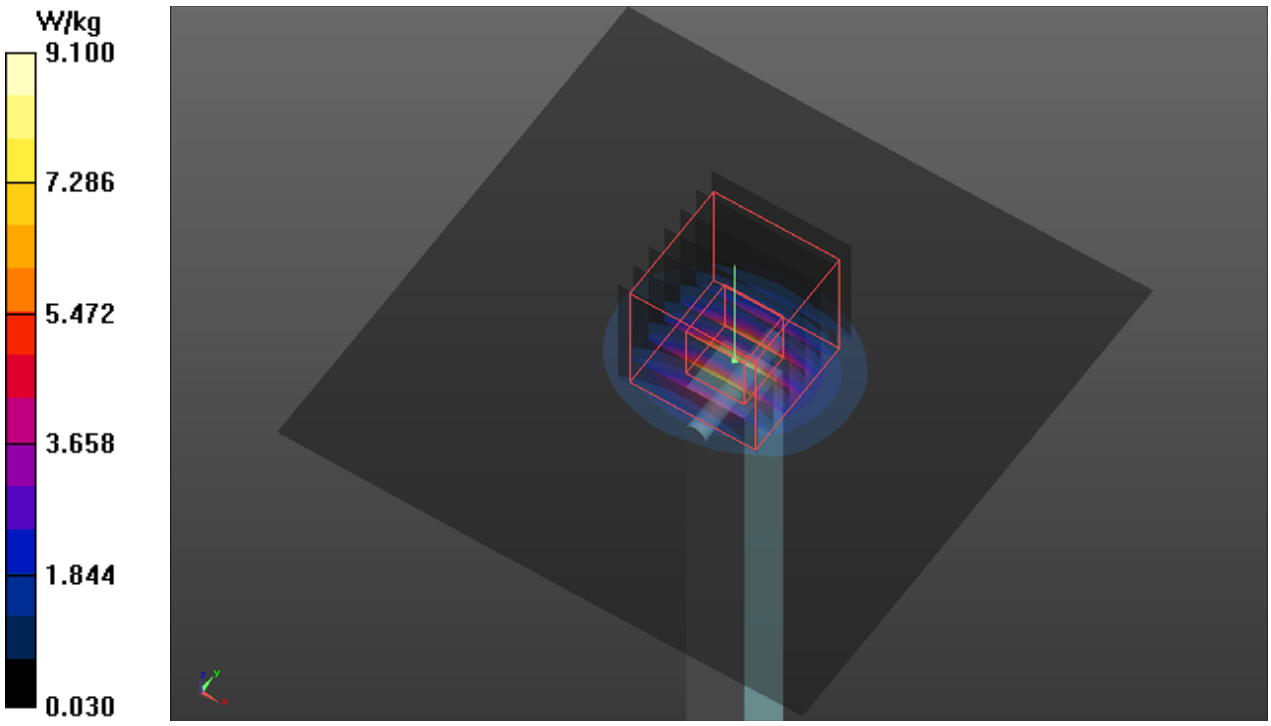

S05 System Check_H5750_210611

DUT: Dipole 5 GHz; Type: D5GHzV2; SN: 1019

Communication System: UID 0, CW; Frequency: 5750 MHz;Duty Cycle: 1:1
Medium: H34T60N1_0611 Medium parameters used: f = 5750 MHz; σ = 5.014 S/m; ε_r = 33.778; ρ = 1000 kg/m^3
Ambient Temperature：23.6 ℃ ; Liquid Temperature：23.4 ℃

DASY5 Configuration:
- Probe: EX3DV4 - SN3971; ConvF(4.95, 4.95, 4.95) @ 5750 MHz; Calibrated: 2021/01/27
- Sensor-Surface: 1.4mm (Mechanical Surface Detection)
- Electronics: DAE4 Sn1431; Calibrated: 2021/03/24
- Phantom: ELI Phantom_1245; Type: QDOVA002AA;
- Measurement SW: DASY52, Version 52.10 (4); SEMCAD X Version 14.6.14 (7483)

Pin=50mW/Area Scan (91x91x1): Interpolated grid: dx=1.000 mm, dy=1.000 mm
Maximum value of SAR (interpolated) = 10.9 W/kg

Pin=50mW/Zoom Scan (7x7x7)/Cube 0: Measurement grid: dx=4mm, dy=4mm, dz=1.4mm
Reference Value = 45.64 V/m; Power Drift = 0.16 dB
Peak SAR (extrapolated) = 19.8 W/kg
SAR(1 g) = 4.22 W/kg; SAR(10 g) = 1.19 W/kg (SAR corrected for target medium)
Maximum value of SAR (measured) = 11.4 W/kg

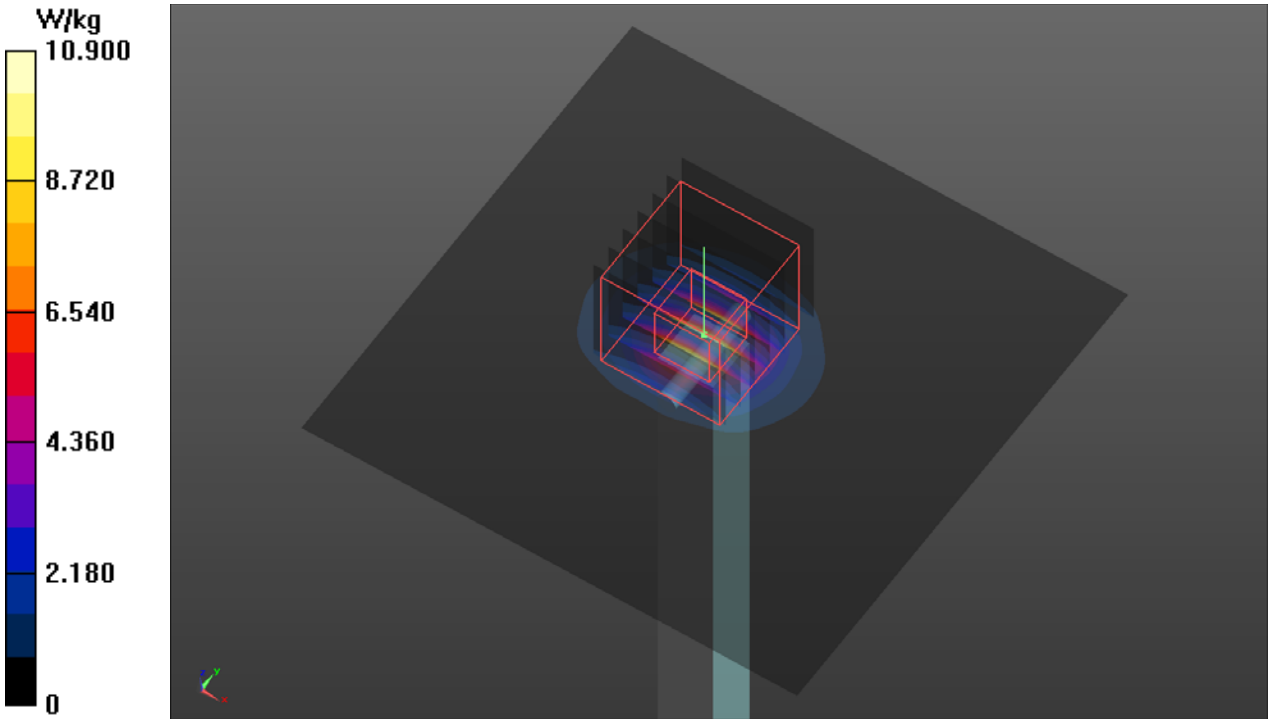

S06 System Check_H2450_210512

DUT: Dipole 2450 MHz; Type: D2450V2; SN: 737

Communication System: UID 0, CW; Frequency: 2450 MHz;Duty Cycle: 1:1
Medium: H19T27N1_0512 Medium parameters used (interpolated): f = 2450 MHz; σ = 1.875 S/m; ε_r = 38.898; ρ = 1000 kg/m^3
Ambient Temperature：23.5 ℃ ; Liquid Temperature：23.2 ℃

DASY5 Configuration:
- Probe: EX3DV4 - SN7472; ConvF(7.69, 7.69, 7.69) @ 2450 MHz; Calibrated: 2020/08/24
- Sensor-Surface: 1.4mm (Mechanical Surface Detection)
- Electronics: DAE3 Sn528; Calibrated: 2021/03/23
- Phantom: Twin-ELI Phantom_2118; Type: QD OVA 004 AA;
- Measurement SW: DASY52, Version 52.10 (4); SEMCAD X Version 14.6.14 (7483)

Pin=50mW/Area Scan (81x81x1): Interpolated grid: dx=1.200 mm, dy=1.200 mm
Maximum value of SAR (interpolated) = 4.27 W/kg
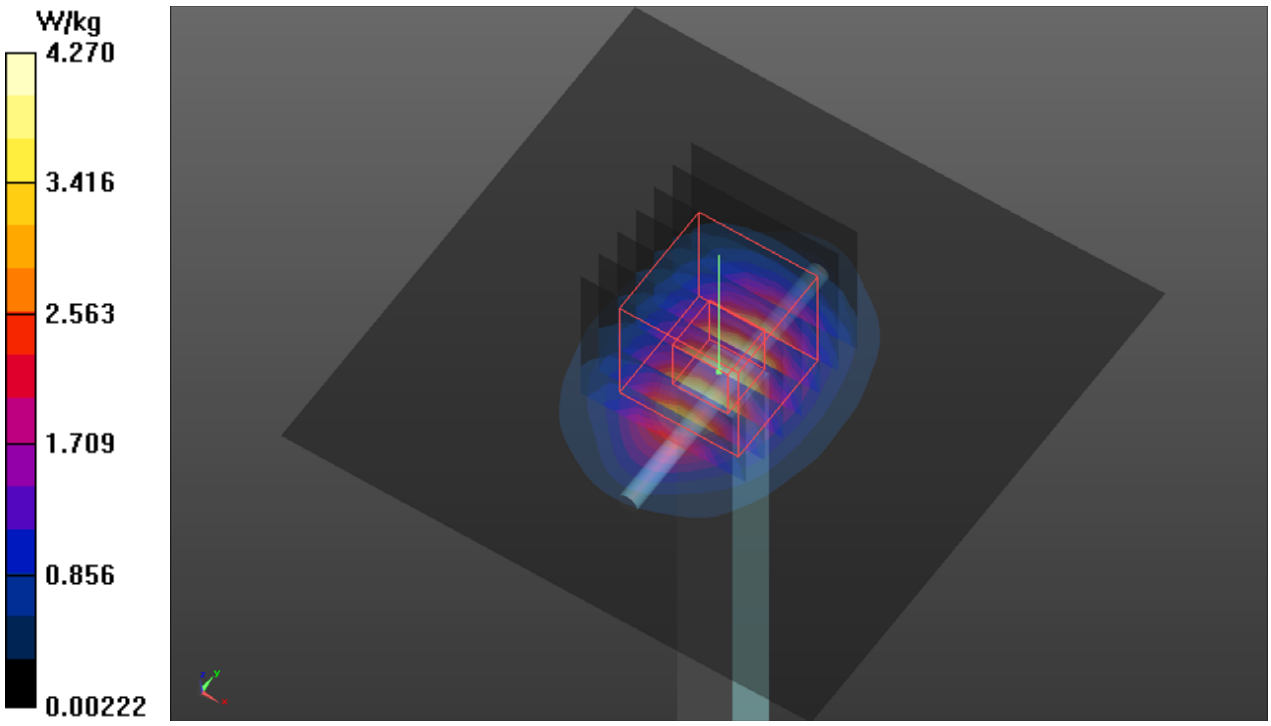
Pin=50mW/Zoom Scan (7x7x7)/Cube 0: Measurement grid: dx=5mm, dy=5mm, dz=5mm
Reference Value = 50.22 V/m; Power Drift = -0.08 dB
Peak SAR (extrapolated) = 5.22 W/kg
SAR(1 g) = 2.58 W/kg; SAR(10 g) = 1.24 W/kg (SAR corrected for target medium)
Maximum value of SAR (measured) = 4.31 W/kg