MS Color Bar v.5 030801 CYAN MAGENTA YELLOW BLACK

360 123 172 279 XBOX 100 75 50 25 100 75 50 25 100 75 50 25 100 75 50 25

XBOX 360

XBOX 360

Part Number X12-35437-01

XBOX 360 WIRELESS RACING WHEEL WITH FORCE FEEDBACK

voxgrafica™

Alliance ~ Redmond
8720 148th Ave NE
Redmond, WA 98052

Tel (425) 885-5851
Fax (425) 885-5856

PROJECT MANAGER: Don Fitzwater

CLIENT:	DESCRIPTION:				
Microsoft Xbox	Xbox Monaco (Race Wheel) 4c Cover				
PD:	DATE:	APPROVED BY:	MPN/JOB CODE:	PART NUMBER/VERSION:	MECHANICAL/PASS:
AKH	07/28/06		35259	X123543701cvr	m1p2

Mechanical

1

Xbox 360 Wireless Racing Wheel with Force Feedback

2 English

17 Fraçais

33 Español

English

Thanks for choosing the Xbox 360 Wireless Racing Wheel with Force Feedback. The racing wheel provides high performance through a combination of force feedback and authentic automotive details.

Your new racing wheel offers:

- 2.4-GHz wireless technology with 9-meter (30-foot) range.
- A 10-inch steering wheel.
- Integrated headset port.
- Assignable controls (including controls normally accessed through the Xbox 360 Controller).

The racing wheel is for use with the Xbox 360™ video game and entertainment system. To customize the racing wheel's performance in a specific game, see the documentation that came with your game.

To enhance your experience with the racing wheel, try the Xbox 360 Rechargeable Battery Pack and the Xbox 360 Quick Charge Kit.

⚠ WARNING

Before using this product, read this manual and the Xbox 360 console manuals for important safety and health information. Keep all manuals for future reference. For replacement manuals, go to www.xbox.com/support or call Xbox Customer Support (see "If You Need More Help").

The limited warranty covering this product is contained in the Xbox 360 Warranty manual (Volume 2) and is available online at www.xbox.com/support.

3 Photosensitive Seizures

3 Musculoskeletal Disorders

4 Select a Location for Your Racing Wheel

5 Set Up Your Racing Wheel

12 Using Your Racing Wheel

13 Cleaning Your Racing Wheel

13 Troubleshooting

14 If You Need More Help

14 Disposal of Waste Electrical and Electronic Equipment

14 For Customers in the United States

15 For Customers in Canada

Part Number X12-35437-01

Black only

MS Spot Color Bar v.1 032502

10 20 30 40 50 60 70 80 90 100

X123543701bdy_ENU_m1.indd 1-2

7/27/06 8:55:15 AM

voxgrafica™
Alliance ~ Redmond
8720 148th Ave NE
Redmond, WA 98052
Tel (425) 885-5851
Fax (425) 885-5856

PROJECT MANAGER: Don Fitzwater

CLIENT:			DESCRIPTION:		
Microsoft Xbox			Xbox Monaco (Racing Wheel) Manual		
PD: AKH	DATE: 07/27/06	APPROVED BY:	MPN/JOB CODE: 35259	PART NUMBER/VERSION: X123543701bdy_ENU	MECHANICAL/PASS: m1p1

Mechanical 1

PHOTOSENSITIVE SEIZURES

A very small percentage of people may experience a seizure when exposed to certain visual images, including flashing lights or patterns that may appear in video games. Even people who have no history of seizures or epilepsy may have an undiagnosed condition that can cause these "photosensitive epileptic seizures" while watching video games.

These seizures may have a variety of symptoms, including lightheadedness, altered vision, eye or face twitching, jerking or shaking of arms or legs, disorientation, confusion, or momentary loss of awareness. Seizures may also cause loss of consciousness or convulsions that can lead to injury from falling down or striking nearby objects.

Immediately stop playing and consult a doctor if you experience any of these symptoms. Parents should watch for or ask their children about the above symptoms—children and teenagers are more likely than adults to experience these seizures. The risk of photosensitive epileptic seizures may be reduced by taking the following precautions:

- Sit farther from the TV screen.
- Use a smaller TV screen.
- Play in a well-lit room.
- Do not play when you are drowsy or fatigued.

If you or any of your relatives have a history of seizures or epilepsy, consult a doctor before playing.

MUSCULOSKELETAL DISORDERS

Use of game controllers, keyboards, mice, or other electronic input devices may be linked to serious injuries or disorders.

When playing video games, as with many activities, you may experience occasional discomfort in your hands, arms, shoulders, neck, or other parts of your body. However, if you experience symptoms such as persistent or recurring discomfort, pain, throbbing, aching, tingling, numbness, burning sensation, or stiffness, DO NOT IGNORE THESE WARNING SIGNS. PROMPTLY SEE A QUALIFIED HEALTH PROFESSIONAL, even if symptoms occur when you are not playing a video game. Symptoms such as these can be associated with painful and sometimes permanently disabling injuries or disorders of the nerves, muscles, tendons, blood vessels, and other parts of the body. These musculoskeletal disorders (MSDs) include carpal tunnel syndrome, tendonitis, tenosynovitis, vibration syndromes, and other conditions.

While researchers are not yet able to answer many questions about MSDs, there is general agreement that many factors may be linked to their occurrence, including medical and physical conditions, stress and how one copes with it, overall health, and how a person positions and uses their body during work and other activities (including playing a video game). Some studies suggest that the amount of time a person performs an activity may also be a factor.

Some guidelines that may help you work and play more comfortably and possibly reduce your risk of experiencing an MSD can be found in the Healthy Gaming Guide at www.xbox.com. These guidelines address topics such as:

- Positioning yourself to use comfortable, not awkward, postures.
- Keeping your hands, fingers, and other body parts relaxed.
- Taking breaks.
- Developing a healthy lifestyle.

If you have questions about how your own lifestyle, activities, or medical or physical condition may be related to MSDs, see a qualified health professional.

SELECT A LOCATION FOR YOUR RACING WHEEL

The racing wheel can be lap or table mounted. If you mount the racing wheel to a table, make sure that it does not fall.

Arrange all cables and cords so that people and pets are not likely to trip over or accidentally pull on them as they move around or walk through the area. When the racing wheel is not in use, you may need to disconnect all cables and cords to keep them out of the reach of children and pets. Do not allow children to play with cables and cords.

english

X123543701bdy_ENU_m1.indd 3-4
7/27/06 8:55:15 AM

SET UP YOUR RACING WHEEL

Before you can use your racing wheel with your Xbox 360 console, you need to:

- Install the racing wheel software on your Xbox 360 console.
- Connect the pedal base to the racing wheel.
- If table mounting is desired, attach the table clamp to a table and attach the racing wheel to the clamp.
- Connect the racing wheel's AC power cord to a standard wall outlet or insert batteries. The racing wheel uses only the AA battery pack with AA disposable batteries (provided) or, alternately, the Xbox 360 Rechargeable Battery Pack (sold separately).
- Introduce the racing wheel to the console by wirelessly connecting the two.

Install the Racing Wheel Software on Your Console

Your console needs a system update before you can use it with the racing wheel.

To update your console:

1 Turn on your console and load the supplied software disc. The update will install automatically.

2 When the installation confirmation message appears, remove the disc and begin setting up your new hardware.

Connect the Pedal Base to the Racing Wheel

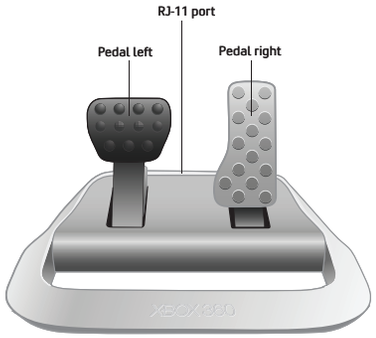

To connect the pedal base to the racing wheel, connect one end of the RJ-11 cable to the RJ-11 port on the pedal base and the other end to the port on the back of the racing wheel.

To streamline your system's appearance, thread both the RJ-11 cable and the power cord (if used) through the cable-management area on the underside of the pedal base.

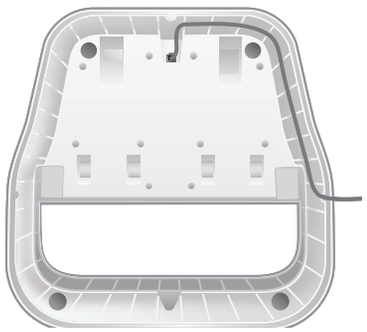

NOTE

The racing wheel requires a straight-through RJ-11 cable (included). Do not use a crossover RJ-11 cable with the racing wheel.

Attach the Table Clamp

The racing wheel can be used for either lap or table mounting. The table clamp stabilizes the wheel during gameplay—especially convenient when force feedback is engaged.

To attach the table clamp:

1 Loosen the clamp's screw and make sure the quick-release lever on the front of the clamp is open (not pressed flat), then slide the clamp onto the edge of your table. Take care not to pinch your fingers.

2 Hand-tighten the screw until the fit is snug. Do not overtighten the screw, as this may damage the table surface.

3 Push the quick-release lever flat.

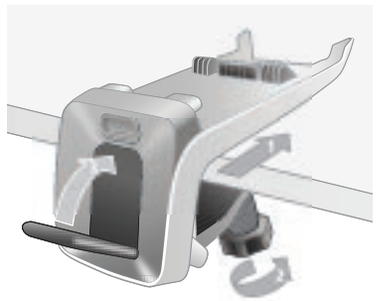

X123543701bdy_ENU_m1.indd 5-6
7/27/06 8:55:24 AM

To move the clamp to another location, pull the quick-release lever, loosen the screw, and slide the clamp off the table.

Attach the Racing Wheel to the Clamp

To attach the racing wheel to the table clamp, angle it toward you so that the guide pins on the clamp fit into the corresponding sockets on the base of the racing wheel. Take care not to pinch your fingers.

Once aligned, press down on the back of the racing wheel until it clicks into place.

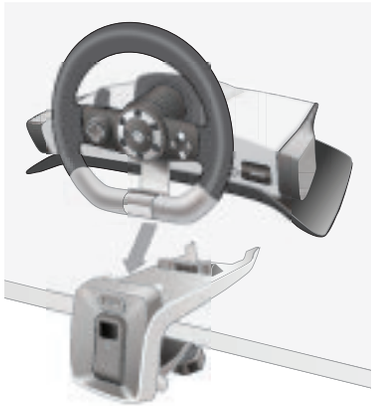

To release the racing wheel from the clamp, press the release button and lift the racing wheel from the clamp's guide pins, back-end first.

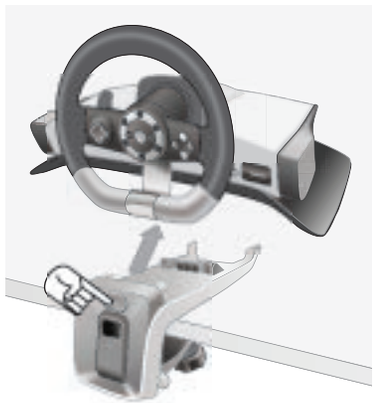

Connect to Power

To connect the racing wheel to power, either connect the AC power supply to a standard wall outlet, or insert batteries (provided). While connected to AC power, your racing wheel will continue to use wireless signals for gameplay.

Connect to power by completely inserting the power supply cord into the power input on the back of the racing wheel until it stops. Connect the AC power cord into the power supply until it stops, then connect the power cord to a standard wall outlet.

⚠ Electrical Safety

As with many other electrical devices, failure to take the following precautions can result in serious injury or death from electric shock or fire or damage to the racing wheel.

If you use AC power, select an appropriate power source:

- The racing wheel's power input is 24V DC @ 1A. Use only the power supply and AC power cord that came with your racing wheel or that you received from an authorized repair center.
- Do not use nonstandard power sources, such as generators or inverters, even if the voltage and frequency appear acceptable. Only use AC power provided by a standard wall outlet.

To avoid damaging the AC power cord:

- Protect the cord from being pinched or sharply bent, particularly where it connects to the power outlet and the racing wheel.
- Do not jerk, knot, sharply bend, or otherwise abuse the power cord.
- Do not expose the power cord to sources of heat.
- When disconnecting the power cord or power supply, pull on the plug—do not pull on the cord.

If the power cord becomes damaged in any way, stop using it immediately and contact Xbox Customer Support for a replacement.

Unplug your racing wheel's power cord during lightning storms or when unused for long periods of time.

Insert Batteries

⚠ Disposable Battery Safety

Improper use of batteries may result in battery fluid leakage, overheating, or explosion. Risk of fire if batteries are replaced by an incorrect type. Released battery fluid is corrosive and may be toxic. It can cause skin and eye burns, and is harmful if swallowed. To reduce the risk of injury:

- Keep batteries out of reach of children.
- Do not heat, open, puncture, mutilate, or dispose of batteries in fire.
- Use only alkaline batteries, type AA (LR6).
- Do not mix new and old batteries.
- Remove the batteries if they are worn out or before storing your racing wheel for an extended period of time. Do not leave batteries in the AA battery pack when it is not installed in the racing wheel.
- If a battery leaks, remove all batteries, taking care to keep the leaked fluid from touching your skin or clothes. If fluid from the battery comes into contact with skin or clothes, flush skin with water immediately. Before inserting new batteries, thoroughly clean the battery compartment with a damp paper towel, or follow the battery manufacturer's recommendations for cleanup.
- Dispose of batteries in accordance with local and national disposal regulations (if any).

X123543701bdy_ENU_m1.indd 7-8 7/27/06 8:55:30 AM