PHONIC

UM 30/31/40/41/50/51

Wireless Microphone

English User's Manual

IMPORTANT SAFETY INSTRUCTIONS

The apparatus shall not be exposed to dripping or splashing and that no objects filled with liquids, such as vases, shall be placed on the apparatus. The MAINS plug is used as the disconnect device, the disconnect device shall remain readily operable.

Warning: the user shall not place this apparatus in the confined area during the operation so that the mains switch can be easily accessible.

1. Read these instructions before operating this apparatus.
2. Keep these instructions for future reference.
3. Heed all warnings to ensure safe operation.
4. Follow all instructions provided in this document.
5. Do not use this apparatus near water or in locations where condensation may occur.
6. Clean only with dry cloth. Do not use aerosol or liquid cleaners. Unplug this apparatus before cleaning.
7. Do not block any of the ventilation openings. Install in accordance with the manufacturer's instructions.
8. Do not install near any heat sources such as radiators, heat registers, stoves, or other apparatus (including amplifiers) that produce heat.
9. Do not defeat the safety purpose of the polarized or grounding-type plug. A polarized plug has two blades with one wider than the other. A grounding type plug has two blades and a third grounding prong. The wide blade or the third prong is provided for your safety. If the provided plug does not fit into your outlet, consult an electrician for replacement of the obsolete outlet.
10. Protect the power cord from being walked on or pinched particularly at plug, convenience receptacles, and the point where they exit from the apparatus.
11. Only use attachments/accessories specified by the manufacturer.
12. Use only with a cart, stand, tripod, bracket, or table specified by the manufacturer, or sold with the apparatus. When a cart is used, use caution when moving the cart/apparatus combination to avoid injury from tip-over.

13. Unplug this apparatus during lighting storms or when unused for long periods of time.
14. Refer all servicing to qualified service personnel. Servicing is required when the apparatus has been damaged in any way, such as power-supply cord or plug is damaged, liquid has been spilled or objects have fallen into the apparatus, the apparatus has been exposed to rain or moisture, does not operate normally, or has been dropped.

CAUTION: TO REDUCE THE RISK OF ELECTRIC SHOCK,
DO NOT REMOVE COVER (OR BACK)
NO USER SERVICEABLE PARTS INSIDE
REFER SERVICING TO QUALIFIED PERSONNEL

The lightning flash with arrowhead symbol, within an equilateral triangle, is intended to alert the user to the presence of uninsulated "dangerous voltage" within the product's enclosure that may be of sufficient magnitude to constitute a risk of electric shock to persons.

The exclamation point within an equilateral triangle is intended to alert the user to the presence of important operating and maintenance (servicing) instructions in the literature accompanying the appliance.

WARNING: To reduce the risk of fire or electric shock, do not expose this apparatus to rain or moisture.

CAUTION: Use of controls or adjustments or performance of procedures other than those specified may result in hazardous radiation exposure.

UM 30/40/50

For the Sound Ambassador Mobile Sound System

UM 31/41/51

For the RoadGear, Performer, and Powerpod 865 and 885 Plus System

USER'S MANUAL

TABLE OF CONTENTS

Introduction.....4

Features.....4

System Components.....4

Operation.....5

UM30 / UM31 UHF Hand-Held System.....6

UM40 / UM41 / UM50 / UM51 Lavaliere and Headset Systems.....8

Battery Insertion.....10

Installing the Receiver Module.....11

Specifications.....12

Phonic reserves the right to improve or alter any information suppied within this document without prior notice.

V1.0 FEB 27, 2006

Introduction

Congratulations on your purchase of one of the many UM Wireless Microphone Systems. The UM Systems, in conjunction with any of Phonic's fine Wirelessly-enabled products, give people a hassle free solution to having to run pesky cables back and forth or having microphone wires get in the way during performances. This manual was designed to make the use of the UM systems very simplistic, and it is advised that user's store this manual in an easy to find place in case it is needed for future reference.

Features

- Space-saving integrated compact receiving module can be installed in Sound Ambassador mobile sound system, Performer speaker and Powerpod 865/885 plus powered mixers.
- Frequency Range: 600MHz ~ 870MHz
- 16 selectable UHF channels preset
- Oscillation mode: Microprocessor controlled PLL synthesized
- Receiving Mode: Diversity
- Internal squelch and mute circuit mode that can resist unusual noise
- SAW filters for rejection of non-RF content

System Components

For the Sound Ambassador:

UM30 Handheld System

- Handheld transmitter (HT-100)
- Wireless receiver module (UM-R10)

UM40 Lavaliere System

- Lavaliere microphone (ML-10)
- Bodypack transmitter (BT-200)
- Wireless receiver module (UM-R10)

UM50 Headset System

- Headset microphone (MH-20)
- Bodypack transmitter (BT-200)
- Wireless receiver module (UM-R10)

For the RoadGear, Performer and Powerpod Plus Series:

UM31 Handheld System

- Handheld transmitter (HT-100)
- Wireless receiver module with metal case (UM-R11)

UM41 Lavaliere System

- Lavaliere microphone (ML-10)
- Bodypack transmitter (BT-200)
- Wireless receiver module with metal case (UM-R11)

UM51 Headset System

- Headset microphone (MH-20)
- Bodypack transmitter (BT-200)
- Wireless receiver module with metal case (UM-R11)

Operation

If using the Lavaliere or Headset Microphones

The ML-10 Lavaliere microphone includes a clip that holds the lavaliere and can be attached to clothing, a tie or in a range of other places where necessary. Plug the lavaliere mini XLR female connector into the mini XLR male jack of the bodypack.

The MH-20 Headset microphone should have the microphone sitting near of your face, with the rear hooks placed over your ears. The microphone is adjustable so you can place it closer to your mouth. Plug the headset mini XLR female connector into the mini XLR male jack of the bodypack.

ML-10

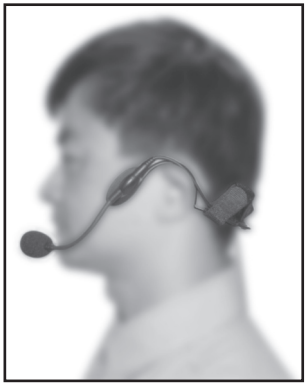

MH-20

Set up instructions

1. Lower the audio level before turning your bodypack or handheld on.
2. Select the channel frequency on the handheld or bodypack so you can start transmitting to the receiver.
3. Make sure that you have selected the same channel number on the receiver (as the handheld mic or bodypack). If not, your device will not receive the audio.
4. You can use the carry pouch along with your bodypack for a more comfort and convenience. Make sure that the antenna from the bodypack is not obstructed by any objects that could be in the path of the transmitter.
5. Check that the receiver's RF, AF and power LED's are illuminated. If one or more of these LEDs does not turn on, check your configuration and try again.
6. Configure your mixer's audio levels and you are ready to go.

NOTE:

- Always make connections before connecting any voltage to the equipment
- If you're using the bodypack transmitter, always connect the antenna before turning it on. Not doing so may cause irreversible damage to your transmitter.

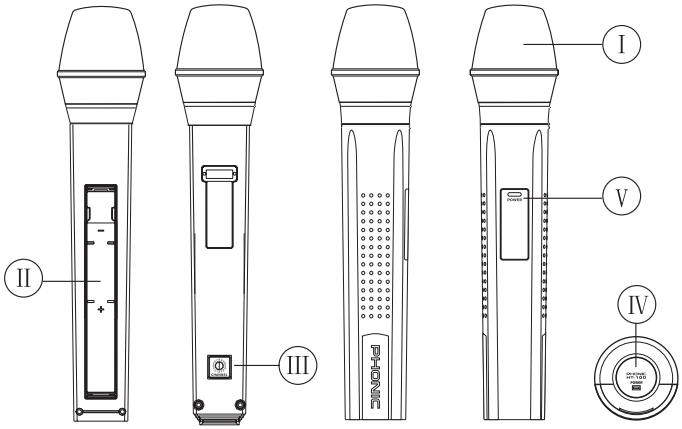

UM30 / UM31
UHF Hand-Held System

1. Handheld Transmitter (HT-100)
The very light Cardioid Wireless Microphone includes a battery tray, on/off switch, LED indicator and channel frequency selector. The transmission antenna is built-in so that users don't have to deal with complicated installations or configurations.

I. Grille
This grill contains the magnetic transducer (better known as pickup) and protects it from damage. It also works as a wind screen and pop stopper (on a lower level).

II. Battery Tray
This compartment holds two 1.5V AA batteries that power the transmitter. Please take extreme care when replacing batteries. Make sure that the battery terminals polarities are correctly positioned in the tray.

III. Channel Selector
Users can select from 16 different frequency channels with this selector. This comes handy if users find problems with the frequency allocations. If you find noise problems on your audio, or if your audio is too low or is interrupted with for apparent reason, change the frequency for a different one. If this doesn't fix the problem, try to get closer to the receiver, check the battery voltage level is correct, and check that no objects are in the path between the transmitter and receiver.

IV. Power On/Off switch
Located on the bottom of the microphone, hold this button down for 2 seconds to turn the microphone on and off. The power LED will light up green if the power is on. If the handheld mic doesn't turn on (or the power LED illuminates red), the batteries may need to be replaced.

V. ON LED Indicator
This bi-colored LED indicator lights up green when the microphone is on. If the LED doesn't light up at all (or illuminates red) the batteries may need to be replaced.

2. Receiver Module (UM-R10 and UM-R11)
This receives the RF signal sent from the hand-held transmitter. The UM-R10 has four LED indicators: two RF, one AF and a Power indicator. The UM-R11 simply has 1 for Power.

I. Power indicator
This LED will illuminate when the receiver module receives power.

II. RF LED Indicators
When one of these LEDs is illuminates, it indicates that the bodypack's signal is being received successfully. The RF LED that lights up is determined by whichever antenna is receiving a clearer signal from the transmitter. If for some reason this LED does not turn on, check your batteries in the transmitter and configuration and try again.

III. AF LED Indicator
When this LED is illuminated, it indicates that there is an audio signal present. If this LED is not activated, check the head of the microphone is correctly attached, and double check your set up.

IV. Channel Selector
This indicates the channel number that is actually in use by the receiver. This number should be identical to the channel selected on the transmitter.

V. Volume
This dial determines the audio level of the signal received by the UM-R10 receiver.

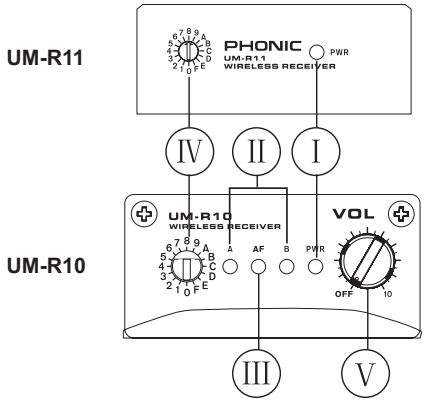

UM40 / UM41 / UM50 / UM51
Lavaliere and Headset Systems

1. Bodypack Transmitter (BT-200)
This single unit modulates and transmits the Audio Frequency to the receiver. It features a transmission antenna and gain knob control. You can connect a Lavaliere microphone, a Headset microphone or any other microphone that meets the bodypack specifications.

I. Microphone Input
This input allows the connection of a condenser microphone, either the MH-20 or the ML-10.

II. Power On/Off switch
The switch turns the bodypack on and off. When pressed down for two seconds. Make sure you lower your audio levels before turning on. Not doing so could cause damage to your speakers.

III. Antenna
Under no circumstances should the antenna be removed or twisted. For maximum performance and distance coverage, make sure that the antenna's line of sight to the transmitter is not obstructed at all.

IV. LED Indicator
When the power switch is in the ON position, this LED will be illuminated in green. If this LED doesn't turn on or light up in red, your batteries will need to be replaced. When ligh up in red means battery low.

V. Battery Tray
The battery tray is used to house the two 1.5V AA batteries. Make sure that the position of the batteries matches the polarity indicated on the holder. Be sure to turn the power off before changing batteries.

VI. Mic Gain adjust knob
This knob controls the sensitivity of the microphone. Turn it clockwise to increase the sensitivity, and counter-clockwise to decrease it. Ensure that you do not set the level too high, as this could cause easy overload.

VII. Channel Selector
This indicates the channel number that is actually in use by the transmitter. This number should be identical to the channel selected on the receiver.

VIII. Carry Pouch
This is a very handy bag that protects the bodypack transmitter, and attaches to your belt. This will no doubt be useful for conferences and other events.

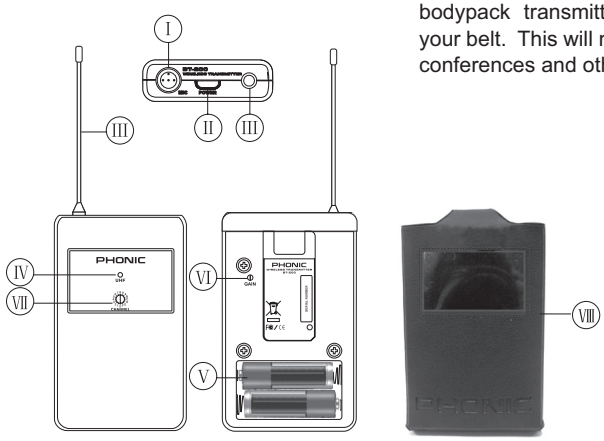

2. Receiver Module (UM-R10 and UM-R11)

This receives the RF signal sent from the bodypack transmitter. The UM-R10 has four LED indicators: two RF, one AF and a Power indicator. The UM-R11 simply has 1 for Power.

I. Power indicator

This LED will illuminate when the receiver module receives power.

II. RF LED Indicators

When one of these LEDs is illuminates, it indicates that the bodypack's signal is being received successfully. The RF LED that lights up is determined by whichever antenna is receiving a clearer signal from the transmitter. If for some reason this LED does not turn on, check your batteries in the transmitter and configuration and try again.

III. AF LED Indicator

When this LED is illuminated, it indicates that there is an audio signal present. If this LED is not activated, check the head of the microphone is correctly attached, and double check your set up.

IV. Channel Selector

This indicates the channel number that is actually in use by the receiver. This number should be identical to the channel selected on the transmitter.

V. Volume Control

This dial determines the audio level of the signal received by the UM-R10 receiver.

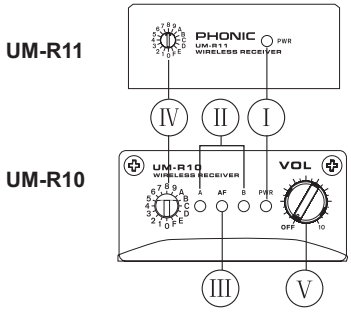

3.Condenser Lavaliere Microphone (ML-10)

Lavaliere microphones are widely used in broadcasting and also for personal presentations. Its small size make them perfect for any professional application, also you will save space and efforts. This is a condenser microphone, it means that needs voltage to proper function, this will be feed from the bodypack batteries, and this also gives you a great signal gain.

4.Condenser Headset Microphone (MH-20)

The headset microphone is a very comfortably fitting microphone that sits perfectly on your head. Brings you freedom of movement, this way you can do all your activities while you are speaking at the mic.

Battery Insertion

Handheld Microphone

1. Very carefully turn the base of the handheld microphone counter-clockwise to unfasten the battery tray.
2. Gently pull the inner part of the microphone (which encompasses the battery tray) out.
3. Insert two brand new 1.5V AA batteries, ensuring the polarity of the batteries corresponds to the polarity indicated on the battery tray. Make sure the batteries are firmly in place.
4. Reinsert the inner-part of the microphone and turn the base clockwise to refasten. Ensure the handheld mic is firmly together.

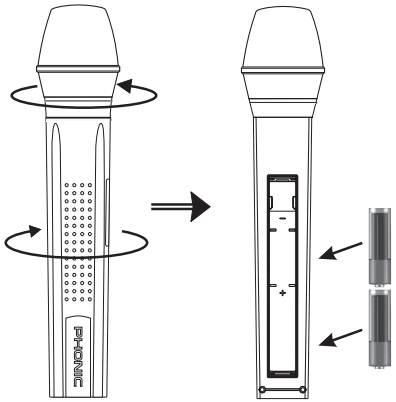

Bodypack Transmitter

1. On the back of the bodypack you will find the battery cover. Gently remove it by sliding it down.
2. Insert two brand new 1.5V AA batteries into the battery compartment, making sure that the polarity of the batteries is the same as indicated. Ensure that they are firmly in place.
3. Replace the cover.

Notes:

- Do not leave batteries in your microphone or bodypack if they will not be used for long periods of time.
- Do not mix new and old batteries.
- Do not mix alkaline with carbon batteries.
- Do not try to connect a DC converter or any other voltage supply other than the ones that are specified within this manual.

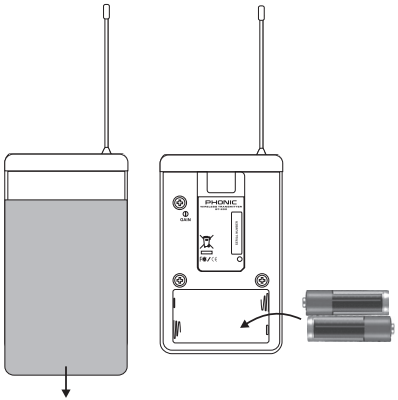

Installing the Receiver Module

For UM 31/41/51

Active Performer Speakers

Remove the compartment cover on the left side of Performer speaker (left when facing the rear). Remove the grounding PCB from the golden finger socket. Insert the UM-R11 receiver into the module compartment, and use a screw to secure it into place. Replace the compartment cover.

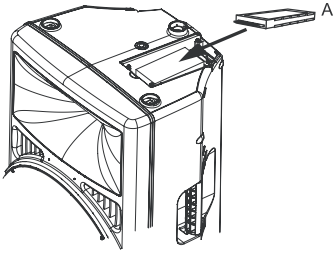

Powerpod 865 and 885 Plus

Open the wireless module compartment by removing the single screw. Slide the UM-R11 module along the wall of the compartment door and into the port connected to the door. Close the compartment door and replace the screw.

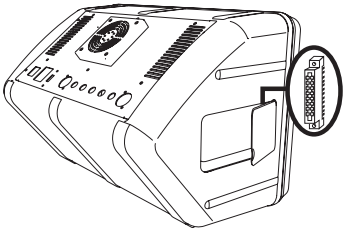

RoadGear 120, 160 and 260

Opening the storage compartment on the rear of the RoadGear's mixer, users will notice 2 module slots available. Insert the UM-R11 receiver module into one of these, use a screw to secure it into place and close the compartment again.

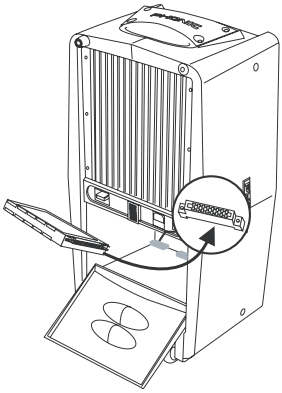

For UM 30/40/50

Sound Ambassador 75/120 Deluxe

Remove the 2 screws at the top of the protective cover, and remove the grounding PCB from the compartment. Place the UM-R10 receiver into the slot revealed after removing the cover, and screw the front panel of the receiver in place.

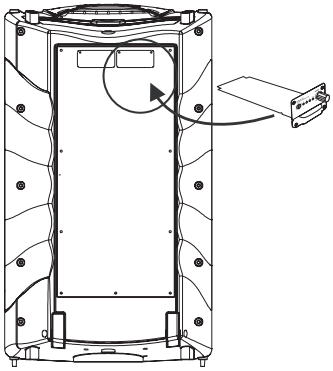

Specifications

System:

RF Frequency	**614-870MHz**
Oscillation Type	PLL Synthesized Control Oscillation
Channels	16 Channels
Audio Frequency Response	50 Hz~18 kHz +/-3dB
Bandwidth	24MHz
Operation Range	100 M

Receiver Module

Model No.	**UM-R10 & UM-R1**
Type	True Diversity
Frequency Stability	±0.005%
S/N Ratio	>100 dB
RF Sensitivity	-100 dBm
Image Rejection	75dB
T.H.D.	<0.5% @ 1KHz
LED Indicators	UM-R10: red LEDs for antenna A & B, and power, green LED for AF; UM-R11: red LED for power
Control	UM-R10: Output Volume, Channel Selector UM-R11: Channel Selector
AF Output Impedance	600 Ω Unbalanced
Squelch	Pilot Tone & Noise Mute
Operation Voltage	6-8 VDC, 500 mA
Output connector	Integrated Socket
Dimensions (WxHxD)	61x25x123 mm

Transmitter

Model No.	HT-100	BT-200
Type	Handheld	Body-pack
Grille Shape	Round/Square	N/A
Spurious Rejection	< -60 dBc	< -60 dBc
Stability	+/- 0.005%	+/- 0.005%
Frequency Deviation	± 40KHz	± 40KHz
S/N Ratio	> 100 dB (1 kHz-A)	> 100 dB (1 kHz-A)
Frequency Response	50 – 18 kHz ±3dB (depend on mic cartridge)	50 – 18 kHz ±3dB (depend on mic cartridge)
Current Consumption	100mA	100mA
LED Indicators	Power On/Off, Low Battery	Power On/Off, Low Battery
Battery	2 x AA	2 x AA
Output power	<50mW	<50mW

Lavaliere/Headset Condenser Microphone

Model No.	ML-10	MH-20
Type	Lavaliere	Headset
Frequency Response	100 Hz~ 13kHz	50Hz ~ 18 kHz
Polar Pattern	Cardioid	Cardioid
Sensitivity (at 1 kHz)	-70 dB +/-3dB	-70 dB +/-3dB
Impedance	2.2k ohms +/-30%	680 ohms +/-30%
Max SPL for 1% THD	130dB	130dB
Connector Type	Mini XLR	Mini XLR
Standard Accessories	Windscreen	Windscreen

TO PURCHASE ADDITIONAL PHONIC GEAR AND ACCESSORIES

To purchase Phonic gear and optional accessories, contact any authorized Phonic distributor. For a list of Phonic distributors please visit our website at www.phonic.com and click on Get Gear. You may also contact Phonic directly and we will assist you in locating a distributor near you.

SERVICE AND REPAIR

Phonic has over 100 service centers worldwide. For replacement parts, service and repairs please contact the Phonic distributor in your country. Phonic does not release service manuals to consumers, and advice users to not attempt any self repairs, as doing so voids all warranties. You can locate a dealer near you at www.phonic.com.

WARRANTY INFORMATION

Phonic stands behind every product we make with a no-hassles warranty. Warranty coverage may be extended, depending on your region. Phonic Corporation warrants this product for a minimum of one year from the original date of purchase against defects in material and workmanship under use as instructed by the user's manual. Phonic, at its option, shall repair or replace the defective unit covered by this warranty. Please retain the dated sales receipt as evidence of the date of purchase. You will need it for any warranty service. No returns or repairs will be accepted without a proper RMA number (return merchandise authorization). In order to keep this warranty in effect, the product must have been handled and used as prescribed in the instructions accompanying this warranty. Any tempering of the product or attempts of self repair voids all warranty. This warranty does not cover any damage due to accident, misuse, abuse, or negligence. This warranty is valid only if the product was purchased new from an authorized Phonic dealer/distributor. For complete warranty policy information, please visit http://www.phonic.com.

CUSTOMER SERVICE AND TECHNICAL SUPPORT

We encourage you to visit our online help at http://www.phonic.com/help/. There you can find answers to frequently asked questions, tech tips, driver downloads, returns instruction and other helpful information. We make every effort to answer your questions within one business day.

Phonic America Corporation
5411 Johns Road, #605
Tampa, FL 33634
(813) 890-8872
support@phonic.com
http://www.phonic.com

PHONIC