S P E C I F I C A T I O N

LG Precision Co., Ltd.

A P P D.	C H K D.	D S G D.	MODEL NO	TADC-H101F
			DOCUMENT NO	BC 40205

S P E C I F I C A T I O N

I n d e x

Item no	Item	Page
1	Common	3p
1- 1	Application	3p
1- 2	Structure	3p
1- 3	Circuit	3p
2	General specifications	3p
2- 1	Applicable broadcasting system	3p
2- 2	Receiving system	3p
2- 3	Intermediate frequency	3p
2- 4	Receiving channel	3p
2- 5	Output channel of modulator	3p - 4p
2- 6	Input / output condition	4p
2- 7	Operating temperature range	4p
2- 8	Storage temperature range	4p
2- 9	Guarantee voltage for operation	4p
2-10	Maximum ratings	5p
2-11	Current consumption	5p
2-12	PLL data format	5p - 7p
2-13	Test condition	7p
2-14	Measuring instruments	8p

					A P P D.	C H K D.	D S G D.	MODEL NO: TADC-H101F
								TITLE: SPECIFICATION
								DOCUMENT NO: BC 40205 (1/26)
SYMB	NO	APPD	CHKD	DSGD				

3	Electrical characteristics	9p
3- 1	RF-modulator section	9p - 12p
3- 2	ANT SW section	13p - 14p
3- 3	Tuner section	15p - 17p
3- 4	IF section	17p - 19p
4	Environmental tests	20p
4 -1	Heat load test	20p
4- 2	Humidity load test	20p
4- 3	Cold test	20p
4- 4	Operating life test	20p
4- 5	High voltage test	20p
4- 6	Vibration test	20p
4- 7	Impact test	20p
5	Mechanical characteristics	21p
5- 1	Outline view assembly appearance	21p
5- 2	Appearance structure	22p
6	Others	22p
6-1	Ant jack load test	22p
6-2	Label mark	22p
6-3	Manufacturing plant	22p
7	Test circuit	23p
8	Frequency table	24p - 26P

					A P P D.	C H K D.	D S G D.	MODEL NO: TADC-H101F
								TITLE: SPECIFICATION
								DOCUMENT NO: BC 40205 (2/26)
SYMB	NO	APPD	CHKD	DSGD				

1. Common

1- 1. Application

This specification applies to TMI type (RF Front-End system) for TV, VTR

1- 2. Structure

Refer to the attached assembly drawing.

1- 3. Circuit

Refer to the attached circuit diagram.

2. General specifications.

2- 1. Applicable broadcasting system

M NTSC / USA Ch

2- 2. Receiving system

Upper Heterodyne

2- 3. Intermediate frequency

Picture intermediate frequency : 45.75 MHz
Sound intermediate frequency : 41.25 MHz

2- 4. Receiving channel

VHF LOW : 2 ~ B Ch
VHF HIGH : C ~ W+11 Ch
UHF : W+12 ~ 69 Ch

2- 5. Output channel of modulator

US 3/4 Ch

Output Ch	Terminal NO. 2
3 Ch	OPEN
4 Ch	GND

2- 6. Input / Output condition

ANT nominal impedance
ANT IN : 75Ω unbalance
ANT OUT : 75Ω unbalance
Video in impedance : 0.7kΩ ~ 1.3kΩ (typ. 1kΩ)
Audio in impedance : 10kΩ min.
Control impedance : 30kΩ min. (typ. 100kΩ)
Video out load : 10kΩ
Audio out load : 100kΩ

2- 7. Operating temperature range

Temperature : -10℃ ~ +60℃
Humidity : less than 85%RH

2- 8. Storage temperature range

Temperature : -20℃ ~ +70℃
Humidity : less than 90%RH

2-9. Guarantee voltage for operation

Terminal	Supply voltage			
	min.	typ.	max.	unit
+B	4.8	5.0	5.2	Vdc
MB	4.8	5.0	5.2	
TU	29.0	32.0	34.0	
CONTROL(MD:ON)	4.8	5.0	5.2	

2-10. Maximum ratings

Terminal	Supply voltage	Unit
+B	6.0	Vdc
MB	6.0	
TU	35.0	
CONTROL(MD:ON)	6.0	

(note) Within "PB" supply voltage at SCL,SDA,terminal.

2-11. Current consumption

Terminal	Current consumption			
	min.	typ.	max.	unit
+B	_	150	180	mA
MB	_	25	32	
TU	_	1.5	5.0	
CONTROL(MD:ON)	_	47.0	173	μA

2-12. PLL characteristics of tuner section

2-12-1. I2C data format

	MSB							LSB	
Address byte	1	1	0	0	0	MA1	MA0	0	A
Divider byte 1	0	N14	N13	N12	N11	N10	N9	N8	A
Divider byte 2	N7	N6	N5	N4	N3	N2	N1	N0	A
Control byte	1	CP	0	CD	0	R1	R0	OS	A
BAND SW byte	0	0	0	0	BS3	BS2	BS1	BS0	A

Where:

- A : Acknowledge bit
- Address Selection

"ADSW" 단자전압	MA1	MA0
0~0.1 × PB	0	0
OPEN	0	1
0.4 × PB ~ 0.6 × PB	1	0
0.9 × PB ~PB	1	1

- CP : Charge pump current (CP = 0 = 50μA, CP = 1 = 200μA)
  - N14~ N0 : Programmable divider byte

    $N = N14 \times 2^{14} + N13 \times 2^{13} + --- + N1 \times 2^{1} + N0$
  - Band switching byte

	BS3	BS2	BS1	BS0
UHF	1	0	0	0
VHF HIGH	0	0	1	0
VHF LOW	0	0	0	1

2-12-2. Oscillator frequency calculation

$Fosc = Fref \times 8 \times N$

- Fosc : Locked oscillator frequency

2-12-3. Input Signal Level (SCL, SDA)

INPUT Signal level	MIN	MAX	Unit
High level	3.0	5.5	V
Low level	-	1.5	

2-12-4 I²C BUS Time

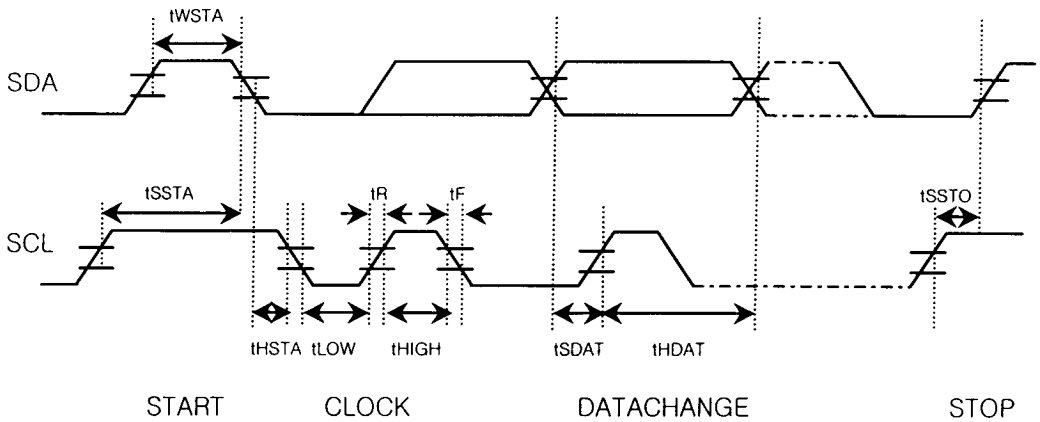

		MIN	TYP	MAX	단 위
fSCL	SCL clock frequency	0		400	㎑
tWSTA	Start waiting time	1300			nsec
tHSTA	Start hold time	600			〃
tLOW	Low clock pulse width	1300			〃
tHIGH	High clock pulse width	600			〃
tSSTA	Start set-up time	600			〃
tHDAT	Data hold time	1300			〃
tSDAT	Data set-up time	600			〃
tR	Rise time			300	〃
tF	Fall time			300	〃
tSSTO	Stop set-up time	600			〃

2-13. Test condition

Terminal	Supply voltage	Unit	Remarks
+B	5 ± 0.1	Vdc	Ripple:10mVp-p max.
MB	5 ± 0.1	Vdc	
TU	32 ± 2	Vdc	
CONTROL	5 ± 0.1	Vdc	
Ambient temperature	25 ± 5	℃	
Relative humidity	65 ± 10	%RH	

					A P P D.	C H K D.	D S G D.	MODEL NO: TADC-H101F
								TITLE: SPECIFICATION
SYMB	NO	APPD	CHKD	DSGD				DOCUMENT NO: BC 40205 (7/26)

2-14. Measuring instruments

2-14-1. RF-modulator section

Audio analyzer	: 8903B	HP
Television demodulator	: 1450-1	TEKTRONIX
Spectrum analyzer	: 8568B	HP
Network analyzer	: 8752A	HP
TV pattern generator	: TG-7/1	SHIBASOKU
	3900N	NIHON TSUSHINKI
Video noise meter	: 925D/1	SHIBASOKU

2-14-2. IF section

TV pattern generator	: TG-7/1	SHIBASOKU
	3900N	NIHON TSUSHINKI
IF modulator	: RM54A	SHIBASOKU
	146F	EIDEN
RF convertor	: RC51B	SHIBASOKU
	458C-X	EIDEN
Video noise meter	: 925D/1	SHIBASOKU
Audio distortion meter	: 885A	SHIBASOKU
Vectorscope	: 520A	TEKTRONIX
Envelope delay meter	: 201/1	SHIBASOKU

3. Electrical characteristics

The unit stated in dBμV is defined the value at 75Ω terminal in this specification. (0 dBm = 109 dBμV)

3- 1. RF-modulator section

Item	Specification				Note
	min.	typ.	max.	unit	
3-1- 1. Video modulation	75	80	85	%	Input signal : 1.0Vp-p white Measure at the output of the standard demodulator.
3-1- 2. Video limit modulation	87	93	99	%	Input signal : 1.5Vp-p stair-steps or ramp. Measure at the output of the standard demodulator.
3-1- 3. V/S ratio	10:3.8	10:4.0	10:4.1	-	Input signal :1.0Vp-p white V : S = 10 : 4 Measure at the output of the standard demodulator.
3-1- 4. Video amplitude frequency characteristics	-2.5	-0.5	+2.0	dB	Measure range : 0.1㎒ ~ 4.2㎒ Based on 1㎒
3-1- 5. Differential Gain (DG)	-	2	7	%	Input signal : 1.0Vp-p stair-steps Chrominance : 20 IRE Luminance : 0 ~ 90 %
3-1- 6. Differential Phase (DP)	-	2	7	deg	Input signal : 1.0Vp-p stair-steps Chrominance : 20 IRE Luminance : 0 ~ 90 %
3-1- 7. Video S/N	45	48	-	dB	Compensation of spectral luminance efficacy. RF output should be amped 12dB. (LGEC control method Measurement conditions. Measure at the out of the Standard demodulator. (TEKTRONIX 1450-1)

					APPD.	CHKD.	DSGD.	MODEL NO: TADC-H101F
								TITLE: SPECIFICATION
SYMB	NO	APPD	CHKD	DSGD				DOCUMENT NO: BC 40205 (9/26)

Item	Specification min.	typ.	max.	unit	Note
					S/N meter. (SHIBASOKU 925D-1 or 925C or equivalent) HPF : 100kHz, LPF : 4.2MHz SC TRAP : ON, WEIGHT : OFF Input signals : Video : 100% white signal Audio : none Video band : 0.1MHz ~ 4.2MHz
3-1- 8. Chroma beat (920kHz P.C.S. beat)	55	65	-	dB	Input signal : 0.4Vp-p 3.58MHz sine wave Use spectrum analyzer to measure the level of Fp + 0.92MHz The value is relative to the level of Fp without video modulation.
3-1- 9. Audio modulation (deviation)	34 (68)	40 (80)	46 (92)	kHz dev (%)	Input signal : -6.5dBs, (1.04Vp-p) 1kHz sine wave (100 % modulation = ± 25kHzp-p dev.)
3-1-10. Audio maximum modulation	150 (300)	220 (440)	-	kHz dev (%)	Input signal : 1kHz sine wave The input should be adjusted to the level just before the saturation of the modulation.
3-1-11. Audio amplitude frequency characteristics	-3	+0.2 -0.6	+3	dB	Input signal : -6.5dBs, (1.04Vp-p) Measure range : 50Hz ~ 10kHz Based on 1kHz
3-1-12. Audio distortion	-	0.3	2.0	%	Input signals : Audio : -6.5dBs (1.04Vp-p), 1kHz sine wave Video : 1Vp-p color bar De-emphasis is on.(75μsec)

SYMB	NO	APPD	CHKD	DSGD	A P P D.	C H K D.	D S G D.	MODEL NO: TADC-H101F
								TITLE: SPECIFICATION
								DOCUMENT NO: BC 40205 (10/26)

Item	Specification				Note
	min.	typ.	max.	unit	
3-1-13. Audio S/N	48	56	-	dB	Input signals : Audio : -6.5dBs (1.04Vp-p), 1㎑ sine wave Video : All black (sync. only) Use standard demodulator of inter-carrier system. De-emphasis is on. (75μsec)
3-1-14. Audio buzz	45	55	-	dB	Video input signal : 1Vp-p color bar Other conditions : same as item 3-1-13.
3-1-15. Video carrier output level	63.0	66.0	69.0	dBμV	Video input signal : 1Vp-p 100% white signal.
3-1-16. P/S ratio (sound carrier level)	12	14	17	dB	Audio input signal : none Other conditions : same as item 3-1-15.
3-1-17. Video carrier frequency	-100	-	+100	㎑	Video input signal : none
3-1-18. Sound carrier frequency	4493	4500	4507	㎑	Audio input signal : none The measurements are taken after 1 min. from the power on.
3-1-19. Outband spurious	- -	- -	39.5 39.5	dBμV dBμV	Video input signal : 1Vp-p color bar Measure range : 0 ~ 1㎓ Except the range from Fp-4.6㎒ to Fp+7.4㎒. Tuner local OSC leakage.
3-1-20. Inband spurious	60	-	-	dB	Input signals : Video : none Audio : none Measure range : Fp~Fp+4.5㎒.
3-1-21. Terminal Leakage	-	-	54	dBμV	Measure range :0-1 GHz except GND.

SYMB	NO	APPD	CHKD	DSGD	A P P D.	C H K D.	D S G D.	MODEL NO: TADC-H101F
								TITLE: SPECIFICATION
								DOCUMENT NO: BC 40205 (11/26)

3-1-22. Stability

3-1-22-1. Video carrier frequency rise up time.
The time to approach the set value ±100㎑ : within 3 seconds

3-1-22-2. Audio carrier frequency rise up time.
The time to approach the set value ±4㎑ : within 10 seconds

3-1-22-3. Video carrier frequency shift by supply voltage drift.
Within ±10㎑ by ±0.3V shift of the supply voltage.

3-1-22-4. Audio carrier frequency shift by supply voltage drift.
Within ±3㎑ by ±0.3V shift of the supply voltage.

3-1-23. Thermal Stability

3-1-23-1. Thermal stability of video modulation.
Within ±5% based on the temperature of 25℃.

※ Unless otherwise specified, thermal stability tests shell be performed under the following conditions.

Measurement temperature range : -10℃ ~ 60℃

Humidity range : 45%RH ~85%RH

Test measurement order and time :
25℃ → -10℃(2H) → 10℃(1H) → 25℃(1H) → 45℃(1H) → 60℃(2H)

3-1-23-2. Thermal stability of audio modulation.
Within ±10㎑ based on the temperature of 25℃.

3-1-23-3. Thermal stability of video modulation.
Within ±100㎑ based on the temperature of 25℃.

3-1-23-4. Thermal stability of audio modulation.
Within ±10㎑ based on the temperature of 25℃.

3-1-23-5. Thermal stability of video modulation.
Within ±2.0 dB on the temperature of 25℃.

3-1-23-6. Thermal stability of P/S ratio
Within ±2.5 dB based on the temperature of 25℃, but the P/S ratio itself should not be less than 11 dB.

3- 2. ANT SW section

Unless otherwise specified, measurement range shall be 54㎒ ~ 810㎒, and unused RF terminals shall be terminated by rated impedance Terminator.

Item	Specification				Note
	min.	typ.	max.	unit	
3-2-1. Insertion loss	-	5	6	dB	ANT IN to ANT OUT mode : TV (at MD OFF)
3-2-2. VSWR Ⅰ	-	3.5	4.5		ANT IN Terminal mode : TV (at MD OFF) 54㎒ ~ 810㎒
3-2-3. VSWR Ⅱ	- -	2 2	4 3		ANT OUT terminal mode : TV (at MD OFF) 54㎒ ~ 810㎒ mode : VTR (at MD ON) 61㎒ ~ 72㎒
3-2-4. Isolation	60	65	-	dB	Isolation from ANT OUT to ANT IN mode : VTR (at MD ON) 60㎒ ~ 72㎒
3-2-5. ANT IN leakage - MD - TU OSC	 - -	 - -	 9.5 52	 dBμV dBμV	mode : VTR (at MD ON) RF-modulator section : none input signal Tuner OSC leakage.
3-2-6. 2nd Harmonics inter modulation	55	64	-	dB	f1/(f1+f2) ratio mode : TV (at MD OFF) item / freq(㎒) / level(dB)μV f1 / 91.25 / 100 f2 / 103.25 / 100 Both f1 and f2 are not modulated.

					APPD.	CHKD.	DSGD.	MODEL NO: TADC-H101F
								TITLE: SPECIFICATION
SYMB	NO	APPD	CHKD	DSGD				DOCUMENT NO: BC 40205 (13/26)

Item	Specification				Note
	min.	typ.	max.	unit	
3-2-7. Cross modulation	55	62	-	dB	Then take the smallest ratio from the sideband to f2 as cross modulation value. f1 is 40% AM modulated by 15.75KHz sine wave. f2 is not modulated.

item	freq(㎒)	level(dB)㎶
f1	91.25	105
f2	193.25	80

					APPD.	CHKD.	DSGD.	MODEL NO: TADC-H101F
								TITLE: SPECIFICATION
SYMB	NO	APPD	CHKD	DSGD				DOCUMENT NO: BC 40205 (14/26)

3- 3. Tuner section

When the test characteristics, test point is pin no.16/if output terminal.

Item			Specification min.	typ.	max.	unit	Note	
3-3-1. IF rejection								
	UHF		60	90	-	dB	ANT INPUT level 65dBμV	75Ω terminated
	VHF	HIGH	60	90	-			
		LOW	55	80	-			
	UHF		45	60	-	dB	ANT INPUT level 95dBμV	
	VHF	HIGH	50	65	-			
		LOW	45	60	-			
3-3-2. Image rejection								
	UHF		45	60	-	dB	ANT INPUT level 65dBμV	75Ω terminated
	VHF	CATV	45	70	-			
		13 ~ 7	60	75	-			
		6 ~ 2	60	75	-			
	UHF		40	55	-	dB	ANT INPUT level 95dBμV	
	VHF	CATV	40	50	-			
		13 ~ 7	40	55	-			
		6 ~ 2	40	55	-			
3-3-3. 920㎑ color beat rejection							ANT INPUT level p:60dBμV (75Ω terminated) c:44dBμV (75Ω terminated) s:54dBμV (75Ω terminated)	
	UHF		50	70	-	dB		
	VHF		50	70	-			

SYMB	NO	APPD	CHKD	DSGD	A P P D.	C H K D.	D S G D.	MODEL NO: TADC-H101F
								TITLE: SPECIFICATION
								DOCUMENT NO: BC 40205 (15/26)

Item	Specification				Note
	min.	typ.	max.	unit	
3-3-4. CH 6 beat	45	60	-	dB	ANT INPUT level desire : 60dBμV (75Ω terminated) undesire : 54dBμV (75Ω terminated)
3-3-5. CH A-5 beat	45	60	-	dB	ANT INPUT level desire : 60dBμV (75Ω terminated)
3-3-6. CB rejection.	0.535 MHz ~ 30 MHz -7dBm min				desire : 55.25MHz ~ 83.25MHz (CH2 ~ CH6) -66dBm

3-3-7. 1% Cross modulation

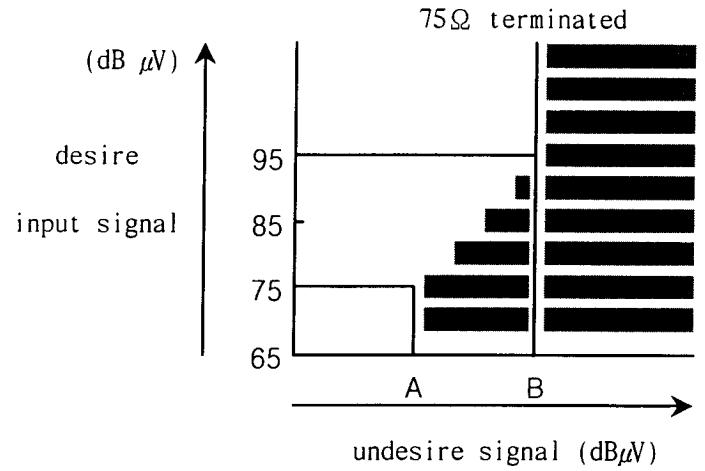

CH		A(dBμV)	B(dBμV)
UHF		67	84
VHF	W+11 ~ J	67	89
	13 ~ 2	67	89

Cross modulation value should be within hatched area.
※ Tuner should be measured for 1% cross modulation with ±2 channel undesired signal.

3-3-8. +B shift

CH	min.	typ.	max.	unit.	note
UHF	-	-	250	kHz	B±1%
VHF HIGH	-	-	250		

					APPD.	CHKD.	DSGD.	MODEL NO: TADC-H101F
								TITLE: SPECIFICATION
SYMB	NO	APPD	CHKD	DSGD				DOCUMENT NO: BC 40205 (16/26)

3-3-9. Over range	CH	Vtu	min.	typ.	max.	unit.
	UHF	28.0 V	2.0	-	-	MHz
		0.5 V	2.0	-	-	
	VHF	28.0 V	2.0	-	-	
		0.5 V	2.0	-	-	

3-3-10. Noise Figure	CH	min.	typ.	max.	unit.	note
	UHF	-	10.0	14.0	dB	
	VHF HIGH	-	9.0	14.0		
	VHF LOW	-	9.0	13.0		
3-3-11. Power gain	UHF	25	38	-	dB	
	VHF	25	38	-		
3-3-12. Power gain deviation	UHF	-	6	10	dB	
	VHF HIGH	-	6	12		
	VHF LOW	-	6	12		
3-3-13. Temperature shift	W+12 ~ 69	-	-	3000	kHz	25℃±25℃
	W+11 ~ J	-	-	3000		
	13 ~ 2	-	-	2000		

3-4. IF section

When the test electrical characteristics when there are no instruction.
fp input level is 70 dBμV and p/s ratio is -7 dB.

Item	Specification				Note
	min.	typ.	max.	unit	
3-4-1. Video S/N	45	47	-	dB	A figure in parentheses is spec by LGEC measurement system
	45	47	-		50% white signal. 87.5% modulation. Subcarrier trap : on HPF : 100 kHz, LPF : 4.2 MHz

					A P P D.	C H K D.	D S G D.	MODEL NO: TADC-H101F
								TITLE: SPECIFICATION
								DOCUMENT NO: BC 40205 (17/26)
SYMB	NO	APPD	CHKD	DSGD				

Item	Specification min.	typ.	max.	unit	Note
3-4-2. Noise limiting sensitivity					A figure in parentheses is spec by LGEC measurement system
AIR		45	48	dBμV	
CATV		45	50		50% white signal. 87.5% modulation. Subcarrier trap : on HPF : 100㎑, LPF : 4.2㎒ Video S/N=30dB
UHF		45	50		
3-4-3. Video output level	0.8	1.0	1.2	Vp-p	standard color bar:87.5% mod.
3-4-4. SYNC ratio	26	28.6	30	%	standard color bar:87.5% mod.
Burst ratio	17	25	37		
3-4-5. Video amplitude frequency characteristics					
1.0 ㎒	-2	0	+2		Full sweep : 87.5% mod. based on 0.5 ㎒
2.0 ㎒	-2	0	+2		
3.0 ㎒	-2	0	+2		
3.58㎒	-3	-1	+2		
3-4-6. $Sin^2$2T pulse response	70	90	110	%	$Sin^2$2T pulse & bar:87.5% mod.
3-4-7. Differential Gain [CH : 11]	-	5	8	%	5 stair-steps : 87.5% mod. Set modulation at the peak of 5'th chroma signal
3-4-8. Differential Phase [CH : 11]	-	5	8	deg	5 stair-steps : 87.5% mod. Set modulation at the peak of 5'th chroma signal
3-4-9. Y/C delay time	-100	0	+100	nsec	0.25 ㎒ standard Envelope delay meter.

SYMB	NO	APPD	CHKD	DSGD	APPD.	CHKD.	DSGD.	MODEL NO: TADC-H101F
								TITLE: SPECIFICATION
								DOCUMENT NO: BC 40205 (18/26)

Item	Specification				Note
	min.	typ.	max.	unit	
3-4-10. Audio output level	280	370	500	mVrms	1㎑ /±25㎑ dev. standard color bar:87.5% mod.
3-4-11. Audio distortion	-	1	2	%	1㎑ /±25㎑ dev. standard color bar:87.5% mod.
3-4-12. Audio frequency characteristics 20 Hz 12 ㎑	 -3 -3	 0 0	 +3 +3	dB	20Hz ~ 12㎑ Based on 1㎑ /±7.5㎑ dev. standard color bar:87.5% mod.
3-4-13. Audio S/N	45	50	-	dB	1㎑ /±25㎑ dev. standard color bar:87.5% mod. Use IHF filter.
3-4-14. SYNC buzz	-	50	100	mVp-p	standard color bar:87.5% mod. 400Hz/±25㎑ dev. P/S=-17dB
3-4-15. AFT alignment accuracy	-50	0	+50	㎑	Alignment center : 2.5V IF input level : 90dB μV P/S=-7dB standard color bar:87.5% mod.
3-4-16. SIF LEVEL	90	95	100	dBμV	FM Mod.:NON. P/S = 0 dB

					APPD.	CHKD.	DSGD.	MODEL NO: TADC-H101F
								TITLE: SPECIFICATION
SYMB	NO	APPD	CHKD	DSGD				DOCUMENT NO: BC 40205 (19/26)

4. ENVIRONMENTAL TESTS
(規格値는 初期値에 대하여 變化 範圍를 表示한다)

Item	Specification			Note
	TUNER	MODULATOR	IF	
4-1. Heat load teat	OSC frequency UHF : ±2.5㎒ VHF : ±2.5㎒	Video modulation ±8%max Video carrier frequency ±100㎑ max Video carrier output level ±4dB max Audio modulation ±8%max Audio carrier frequency ±20㎑ max P/S ratio ±3dB max	Video S/N ±6dB Video output ±0.2Vp-p max Noise limiting sensitivity ±6dB Audio output ±30% max	test condition 4-1-1
4-2. Humidity load teat	same as in item 4-1			test condition 4-2-1
4-3. Cold test	same as in item 4-1			test condition 4-3-1
4-4. Operating life test	same as in item 4-1			test condition 4-4-1
4-5. High voltage test	same as in item 4-1			test condition 4-5-1
4-6. Vibration test	same as in item 4-1			test condition 4-6-1
4-7. Impact test	same as in item 4-1			test condition 4-7-1

					APPD.	CHKD.	DSGD.	MODEL NO: TADC-H101F
								TITLE: SPECIFICATION
SYMB	NO	APPD	CHKD	DSGD				DOCUMENT NO: BC 40205 (20/26)

Environmental test condition

Item	Test condition
4-1-1 Heat load teat	1. Initial value measure at standard test condition. 2. Leave samples in 70℃±2℃ for 96±5 hours, and in standard test condition for 30 minutes, then take measurements within 1 hour. 3. Supply voltage : standard ±10% 4. Supply voltage cycle : 1.5h on, 0.5h off
4-2-1 Humidity load test	1. Leave samples in 40±5℃ for 24±2 hours, and in standard test condition for 30 minutes, then take measurements. 2. Leave samples in 40±5℃ 90 ~ 95% RH, for 96±5 hours, and in standard test condition for 30 minutes, then take measurements within 1 hour. 3. Supply voltage : standard +10% 4. Supply voltage cycle : 1.5h on, 0.5h off
4-3-1 Cold test	1. Initial value measure at standard test condition. 2. Leave samples in -20℃±2℃ for 96±5 hours, and in standard test condition for 2 hours, then take measurements within 1 hour.
4-4-1 Operating life test	1. Take measurements in standard test condition. 2. Leave samples for 1000 hours, then take measurements. 3. Supply voltage : standard
4-5-1 High voltage test	15kV, 10 times (150pF charged) series R=150Ω
4-6-1 Vibration test	Vibration test fixture in used to vibrate the tuner with a total amplitude of 1mm and frequency ranging from 10 to 55hz, once per minute consecutively, for 40 minutes in each of three directions, x,y and z.
4-7-1 Impact test	1. Impact acceleration : 50m/sec² 2. Impact time : 11msec 3. Impact time & direction : 3 times per each 6 sides
5. Mechanical characteristics	
5-1 Outline view assembly appearance	No defects of wiring, soldering and assembling. No dirt, rust, corrosion or foreign material.

					A P P D.	C H K D.	D S G D.	MODEL NO: TADC-H101F
								TITLE: SPECIFICATION
								DOCUMENT NO: BC 40205 (21/26)
SYMB	NO	APPD	CHKD	DSGD				

Item	Test condition
5-2 Appearance structure	
Dimension	As assembly drawing.
Mounting	As assembly drawing.
Weight	Approximately 80±5g.
6. Others 6-1. Ant jack Load Test	After Caulking the connectors there should not be cracks and defections and within specification below.

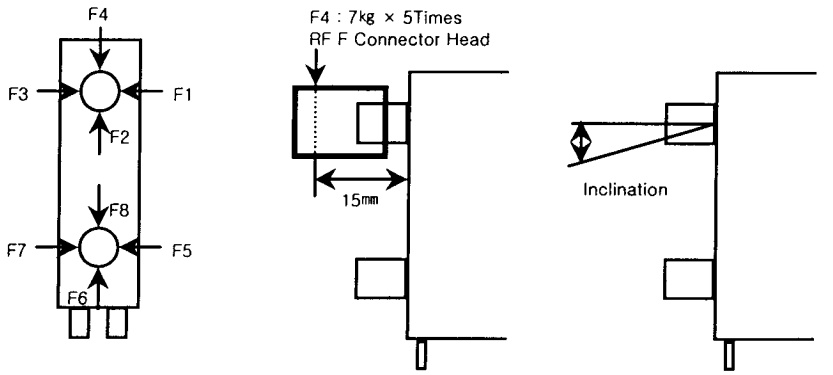

Item	Unit	SPEC			LG		
		MIN	TYP	MAX	MIN	TYP	MAX
Inclination	Degree			3			3

6-2. Label mark

Following as below

1) LGTMI-US1-S
2) DAEWOO PART NO.
3) TADC-H101F
4) LOT NO
5) THE COUNTRY OF ORIGIN

6-3. Manufacturing plant

Producing district of the products shall be followed under table.

Manufacturing plant	Country of origin
LGEC	㉺ E99935 LG-K
LGECX	㉺ E99935 LG-M'

					APPD.	CHKD.	DSGD.	MODEL NO: TADC-H101F
								TITLE: SPECIFICATION
SYMB	NO	APPD	CHKD	DSGD				DOCUMENT NO: BC 40205 (22/26)

7. TEST CIRCUIT

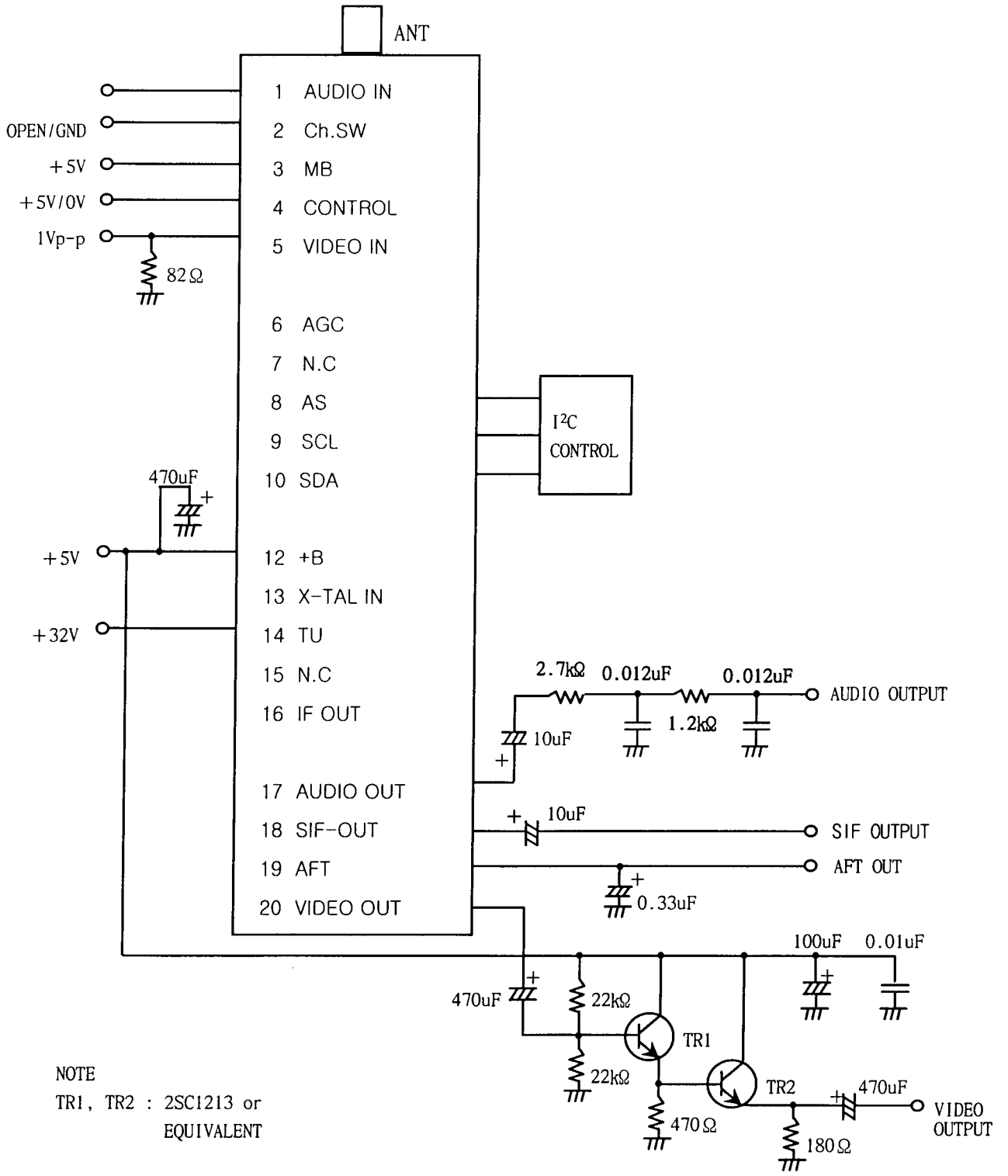

NOTE
TR1, TR2 : 2SC1213 or EQUIVALENT

					A P P D.	C H K D.	D S G D.	MODEL NO: TADC-H101F
								TITLE: SPECIFICATION
SYMB	NO	APPD	CHKD	DSGD				DOCUMENT NO: BC 40205 (23/26)

US 126/155/181 CH FREQUENCY LIST

CH	CENTER	P-Freq	S-Freq	OSC	BAND CODE
2	57.50	55.25	59.75	101	1 0 0 0
3	63.50	61.25	65.75	107	1 0 0 0
4	69.50	67.25	71.75	113	1 0 0 0
4A	75.50	73.25	77.75	119	1 0 0 0
5	79.50	77.25	81.75	123	1 0 0 0
6	85.50	83.25	87.75	129	1 0 0 0
A-5	93.50	91.25	95.75	137	1 0 0 0
A-4	99.50	97.25	101.75	143	1 0 0 0
A-3	105.50	103.25	107.75	149	1 0 0 0
A-2	111.50	109.25	113.75	155	1 0 0 0
A-1	117.50	115.25	119.75	161	1 0 0 0
A	123.50	121.25	125.75	167	1 0 0 0
B	129.50	127.25	131.75	173	1 0 0 0
C	135.50	133.25	137.75	179	0 1 0 0
D	141.50	139.25	143.75	185	0 1 0 0
E	147.50	145.25	149.75	191	0 1 0 0
F	153.50	151.25	155.75	197	0 1 0 0
G	159.50	157.25	161.75	203	0 1 0 0
H	165.50	163.25	167.75	209	0 1 0 0
I	171.50	169.25	173.75	215	0 1 0 0
7	177.50	175.25	179.75	221	0 1 0 0
8	183.50	181.25	185.75	227	0 1 0 0
9	189.50	187.25	191.75	233	0 1 0 0
10	195.50	193.25	197.75	239	0 1 0 0
11	201.50	199.25	203.75	245	0 1 0 0
12	207.50	205.25	209.75	251	0 1 0 0
13	213.50	211.25	215.75	257	0 1 0 0
J	219.50	217.25	221.75	263	0 1 0 0
K	225.50	223.25	227.75	269	0 1 0 0
L	231.50	229.25	233.75	275	0 1 0 0
M	237.50	235.25	239.75	281	0 1 0 0
N	243.50	241.25	245.75	287	0 1 0 0
O	249.50	247.25	251.75	293	0 1 0 0
P	255.50	253.25	257.75	299	0 1 0 0
Q	261.50	259.25	263.75	305	0 1 0 0

CH	CENTER	P-Freq	S-Freq	OSC	BAND CODE
R	267.50	265.25	269.75	311	0 1 0 0
S	273.50	271.25	275.75	317	0 1 0 0
T	279.50	277.25	281.75	323	0 1 0 0
U	285.50	283.25	287.75	329	0 1 0 0
V	291.50	289.25	293.75	335	0 1 0 0
W	297.50	295.25	299.75	341	0 1 0 0
W+1	303.50	301.25	305.75	347	0 1 0 0
W+2	309.50	307.25	311.75	353	0 1 0 0
W+3	315.50	313.25	317.75	359	0 1 0 0
W+4	321.50	319.25	323.75	365	0 1 0 0
W+5	327.50	325.25	329.75	371	0 1 0 0
W+6	333.50	331.25	335.75	377	0 1 0 0
W+7	339.50	337.25	341.75	383	0 1 0 0
W+8	345.50	343.25	347.75	389	0 1 0 0
W+9	351.50	349.25	353.75	395	0 1 0 0
W+10	357.50	355.25	359.75	401	0 1 0 0
W+11	363.50	361.25	365.75	407	0 1 0 0
W+12	369.50	367.25	371.75	413	0 0 0 1
W+13	375.50	373.25	377.75	419	0 0 0 1
W+14	381.50	379.25	383.75	425	0 0 0 1
W+15	387.50	385.25	389.75	431	0 0 0 1
W+16	393.50	391.25	395.75	437	0 0 0 1
W+17	399.50	397.25	401.75	443	0 0 0 1
W+18	405.50	403.25	407.75	449	0 0 0 1
W+19	411.50	409.25	413.75	455	0 0 0 1
W+20	417.50	415.25	419.75	461	0 0 0 1
W+21	423.50	421.25	425.75	467	0 0 0 1
W+22	429.50	427.25	431.75	473	0 0 0 1
W+23	435.50	433.25	437.75	479	0 0 0 1
W+24	441.50	439.25	443.75	485	0 0 0 1
W+25	447.50	445.25	449.75	491	0 0 0 1
W+26	453.50	451.25	455.75	497	0 0 0 1
W+27	459.50	457.25	461.75	503	0 0 0 1
W+28	465.50	463.25	467.75	509	0 0 0 1
W+29	471.50	469.25	473.75	515	0 0 0 1

---------- END OF US 126 CH ----------

SYMB	NO	APPD	CHKD	DSGD	A P P D.	C H K D.	D S G D.	MODEL NO: TADC-H101F
								TITLE: SPECIFICATION
								DOCUMENT NO: BC 40205 (24/26)

US 126/155/181 CH FREQUENCY LIST

CH	CENTER	P-Freq	S-Freq	OSC	BAND CODE
W+30	477.50	475.25	479.75	521	0 0 0 1
W+31	483.50	481.25	485.75	527	0 0 0 1
W+32	489.50	487.25	491.75	533	0 0 0 1
W+33	495.50	493.25	497.75	539	0 0 0 1
W+34	501.50	499.25	503.75	545	0 0 0 1
W+35	507.50	495.25	509.75	551	0 0 0 1
W+36	513.50	511.25	515.75	557	0 0 0 1
W+37	519.50	517.25	621.75	563	0 0 0 1
W+38	525.50	523.25	527.75	569	0 0 0 1
W+39	531.50	529.25	533.75	575	0 0 0 1
W+40	537.50	535.25	539.75	581	0 0 0 1
W+41	543.50	541.25	545.75	587	0 0 0 1
W+42	549.50	547.25	551.75	593	0 0 0 1
W+43	555.50	553.25	557.75	599	0 0 0 1
W+44	561.50	559.25	563.75	605	0 0 0 1
W+45	567.50	565.25	569.75	611	0 0 0 1
W+46	573.50	571.25	575.75	617	0 0 0 1
W+47	579.50	577.25	581.75	623	0 0 0 1
W+48	585.50	583.25	587.75	629	0 0 0 1
W+49	591.50	589.25	593.75	635	0 0 0 1
W+50	597.50	595.25	599.75	641	0 0 0 1
W+51	603.50	601.25	605.75	647	0 0 0 1
W+52	609.50	607.25	611.75	653	0 0 0 1
W+53	615.50	613.25	617.75	659	0 0 0 1
W+54	621.50	619.25	623.75	665	0 0 0 1
W+55	627.50	625.25	629.75	671	0 0 0 1
W+56	633.50	631.25	635.75	667	0 0 0 1
W+57	639.50	637.25	641.75	683	0 0 0 1
W+58	645.50	643.25	647.75	689	0 0 0 1

---------- END OF US 155 CH ----------

CH	CENTER	P-Freq	S-Freq	OSC	BAND CODE
W+59	651.50	649.25	653.75	695	0 0 0 1
W+60	657.50	655.25	659.75	701	0 0 0 1
W+61	663.50	661.25	665.75	707	0 0 0 1
W+62	669.50	667.25	671.75	713	0 0 0 1
W+63	675.50	673.25	677.75	719	0 0 0 1
W+64	681.50	679.25	683.75	725	0 0 0 1
W+65	687.50	685.25	689.75	731	0 0 0 1
W+66	693.50	691.25	695.75	737	0 0 0 1
W+67	699.50	697.25	701.75	743	0 0 0 1
W+68	705.50	703.25	707.75	749	0 0 0 1
W+69	711.50	709.25	713.75	755	0 0 0 1
W+70	717.50	715.25	719.75	761	0 0 0 1
W+71	723.50	721.25	725.75	767	0 0 0 1
W+72	729.50	727.25	731.75	773	0 0 0 1
W+73	735.50	733.25	737.75	779	0 0 0 1
W+74	741.50	739.25	743.75	785	0 0 0 1
W+75	747.50	745.25	749.75	791	0 0 0 1
W+76	753.50	751.25	755.75	797	0 0 0 1
W+77	759.50	757.25	761.75	803	0 0 0 1
W+78	765.50	763.25	767.75	809	0 0 0 1
W+79	771.50	769.25	773.75	815	0 0 0 1
W+80	777.50	775.25	779.75	821	0 0 0 1
W+81	783.50	781.25	785.75	827	0 0 0 1
W+82	789.50	787.25	791.75	833	0 0 0 1
W+83	795.50	793.25	797.75	839	0 0 0 1
W+84	801.50	799.25	803.75	845	0 0 0 1

---------- END OF US 181 CH ----------

SYMB	NO	APPD	CHKD	DSGD	A P P D.	C H K D.	D S G D.	MODEL NO: TADC-H101F
								TITLE: SPECIFICATION
								DOCUMENT NO: BC 40205 (25/26)

US 126/155/181 CH FREQUENCY LIST

CH	CENTER	P-Freq	S-Freq	OSC	BAND CODE
14	473.50	471.25	475.75	517	0 0 0 1
15	479.50	477.25	481.75	523	0 0 0 1
16	485.50	483.25	487.75	529	0 0 0 1
17	491.50	489.25	493.75	535	0 0 0 1
18	497.50	495.25	499.75	541	0 0 0 1
19	503.50	501.25	505.75	547	0 0 0 1
20	509.50	507.25	511.75	553	0 0 0 1
21	515.50	513.25	517.75	559	0 0 0 1
22	521.50	519.25	523.75	565	0 0 0 1
23	527.50	525.25	529.75	571	0 0 0 1
24	533.50	531.25	535.75	577	0 0 0 1
25	539.50	537.25	541.75	583	0 0 0 1
26	545.50	543.25	547.75	589	0 0 0 1
27	551.50	549.25	553.75	595	0 0 0 1
28	557.50	555.25	559.75	601	0 0 0 1
29	563.50	561.25	565.75	607	0 0 0 1
30	569.50	567.25	571.75	613	0 0 0 1
31	575.50	573.25	577.75	619	0 0 0 1
32	581.50	579.25	583.75	625	0 0 0 1
33	587.50	585.25	589.75	631	0 0 0 1
34	593.50	591.25	595.75	637	0 0 0 1
35	599.50	597.25	601.75	643	0 0 0 1
36	605.50	503.25	607.75	649	0 0 0 1
37	611.50	509.25	613.75	655	0 0 0 1
38	617.50	515.25	619.75	661	0 0 0 1
39	623.50	621.25	625.75	667	0 0 0 1
40	629.50	627.25	631.75	673	0 0 0 1
41	635.50	633.25	637.75	679	0 0 0 1
42	641.50	639.25	643.75	685	0 0 0 1
43	647.50	645.25	649.75	691	0 0 0 1
44	653.50	651.25	655.75	697	0 0 0 1
45	659.50	657.25	661.75	703	0 0 0 1
46	665.50	663.25	667.75	709	0 0 0 1
47	671.50	669.25	673.75	715	0 0 0 1
48	677.50	675.25	679.75	721	0 0 0 1

CH	CENTER	P-Freq	S-Freq	OSC	BAND CODE
49	683.50	681.25	685.75	727	0 0 0 1
50	689.50	687.25	691.75	733	0 0 0 1
51	695.50	693.25	697.75	739	0 0 0 1
52	701.50	699.25	703.75	745	0 0 0 1
53	707.50	705.25	709.75	751	0 0 0 1
54	713.50	711.25	715.75	757	0 0 0 1
55	719.50	717.25	721.75	763	0 0 0 1
56	725.50	723.25	727.75	769	0 0 0 1
57	731.50	729.25	733.75	775	0 0 0 1
58	737.50	735.25	739.75	781	0 0 0 1
59	743.50	741.25	745.75	787	0 0 0 1
60	749.50	747.25	751.75	793	0 0 0 1
62	755.50	753.25	757.75	799	0 0 0 1
62	761.50	759.25	763.75	805	0 0 0 1
63	767.50	765.25	769.75	811	0 0 0 1
64	773.50	771.25	775.75	817	0 0 0 1
65	779.50	777.25	781.75	823	0 0 0 1
66	785.50	783.25	787.75	829	0 0 0 1
67	791.50	789.25	793.75	835	0 0 0 1
68	797.50	795.25	799.75	841	0 0 0 1
69	803.50	801.25	805.75	847	0 0 0 1

SYMB	NO	APPD	CHKD	DSGD	A P P D.	C H K D.	D S G D.	MODEL NO: TADC-H101F
								TITLE: SPECIFICATION
								DOCUMENT NO: BC 40205 (26/26)