Use & Care Guide

1.8 cu.ft. OTR Microwave Hood Combination

1000 Watts

Models/Modelos:
KOT-1J0U9

Introduction

Congratulations on your purchase of an over-the range microwave oven. For best results, we suggest reading this guide carefully. You will find instructions on the proper operation and maintenance of your microwave.

Table of Contents

Introduction 1
Precautions to Avoid Possible Exposure to Excessive Microwave Energy 1
Important Safety Instructions ..... 2~4
Installation Recommendations / Automatic Fan Protection Feature 5
Microwaving Tips 6
Safe and Unsafe Materials 7
Touch Control Panel ..... 8~9
Oven Features at a Glance 10
Operating Basics ..... 11~21
Care and Cleaning ..... 22~25
Common Questions and Answers 26
Before You Call ..... 27~28

PRECAUTIONS TO AVOID POSSIBLE EXPOSURE TO EXCESSIVE MICROWAVE ENERGY

A. **Do not** attempt to operate this oven with the door open since open-door operation can result in harmful exposure to microwave energy. It is important not to defeat or tamper with the safety interlocks.

B. **Do not** place any object between the oven front face and the door or allow soil or cleaner residue to accumulate on sealing surfaces.

C. **Do not** operate the oven if it is damaged. It is particularly important that the oven door close properly and that there is no damage to the: (1) door (bent), (2) hinges and latches (broken or loosened), (3) door seals and sealing surfaces.

D. The oven should not be adjusted or repaired by anyone except properly qualified service personnel.

Important Safety Instructions

When using electrical appliances, basic safety precautions should be followed, including the following:

⚠ ***WARNING* - To reduce the risk of burns, electric shock, fire, injury to persons or exposure to excessive microwave energy:**

1. Read all instructions before using the appliance.
2. Read and follow the specific "PRECAUTIONS TO AVOID POSSIBLE EXPOSURE TO EXCESSIVE MICROWAVE ENERGY" found on page 1.
3. This appliance must be grounded. Connect only to properly grounded outlet. See "GROUNDING INSTRUCTIONS" on page 5.
4. Install or locate this appliance in accordance with the provided installation instructions. Do not mount over a sink
5. **This microwave oven is UL listed for installation over electric and gas ranges.** This over-the-range oven was designed for use over ranges no wider than 30 inches.
6. **For best operation, plug this appliance into its own electrical outlet, to prevent flickering of lights, blowing of fuse or tripping of circuit breaker.**
7. Some products such as whole eggs and sealed containers - for example, closed jars - are able to explode and should not be heated in this oven. In rare instances, poached eggs have been known to explode. Cover poached eggs and allow standing time of one minute before cutting into them.
8. Foods with unbroken outer "skin" such as potatoes, sausages, tomatoes, apples, chicken livers and other giblets, and egg yolks (see previous caution) should be pierced to allow steam to escape during cooking. "Boilable" cooking pouches and tightly closed plastic bags should be slit, pierced or vented.
9. Do not heat, store or use flammable materials in or near the oven. Fumes can create a fire hazard or explosion.
10. Use this appliance only for its intended use as described in this manual. Do not use corrosive chemicals or vapors in this appliance. This type of oven is specifically designed to heat, cook or defrost food. It is not designed for industrial, laboratory or commercial use. it is intended for home use only.
11. As with any appliance, close supervision is necessary when used by children.
12. Do not operate this appliance if it has a damaged cord or plug, if it is not working properly or if it has been damaged or dropped.
13. This appliance should be serviced only by qualified service personnel. Contact nearest authorized service facility for examination, repair or adjustment.
14. Do not cover or block any openings on the appliance.
15. Do not use or store this appliance outdoors. Do not use this product near water - for example, near a kitchen sink, in a wet basement or near a swimming pool, or similar locations.
16. Do not immerse cord or plug in water.
17. Keep cord away from heated surfaces.
18. Do not let cord hang over edge of table or counter.
19. When cleaning surfaces of door and oven that come together on closing the door, use only mild, non-abrasive soaps or detergents applied with a sponge or soft cloth.
20. To reduce the risk of fire in the oven cavity:
    a. Do not overcook food. Carefully attend appliance when paper, plastic or other combustible materials are placed inside the oven to facilitate cooking. Avoid using recycled paper products. Do not use newspaper or other printed paper in the oven. Such products

sometimes contain impurities which could ignite.

b. Remove wire twist-ties from paper or plastic bags before placing them in oven.

c. If materials inside the oven ignite, keep oven door closed, turn oven off and disconnect the power cord or shut off power at the fuse or circuit breaker panel.

d. Do not use the oven for storage. Do not leave paper products, cooking utensils or food in the oven when not in use.

e. Do not pop popcorn except in a microwave approved popcorn popper or in a commercial package recommended especially for microwave ovens.

f. Do not overcook potatoes. They may dehydrate and catch fire.

g. Do not use for drying clothes, linens, newspaper or similar non-food type items.

21. Do not operate the oven when empty or with an empty utensil to avoid damage to the oven and danger of fire.
22. Do not lean on the oven door. The door is designed to close tightly and seal properly for safe operation. Leaning on the door may warp or break the hinges.
23. To avoid exposure to dangerous high voltage, DO NOT REMOVE THE SPLATTER SHIELD inside the oven cavity.
24. Liquids, such as water, coffee, or tea are able to be overheated beyond the boiling point without appearing to be boiling due to surface tension of the liquid. Visible bubbling or boiling when the container is removed from the microwave oven is not always present. THIS COULD RESULT IN VERY HOT LIQUIDS SUDDENLY BOILING OVER WHEN A SPOON OR OTHER UTENSIL IS INSERTED INTO THE LIQUID. To reduce the risk of injury to persons:
    1 Do not overheat the liquid.
    2 Stir the liquid both before and halfway through heating it
    3 Do not use straight-sided containers with narrow necks.
    4 After heating, allow the container to stand in the microwave oven for a short time before removing the container.
    5 Use extreme care when inserting a spoon or other utensil into the container.
25. Read and follow specific microwave oven preparation instructions on food packages or containers (especially baby food). Above all, this is a cooking appliance designed to prepare food.
26. Use only cooking utensils and accessories made for use in the microwave and specifically described in this manual.
27. Microwave oven manufacturers do not recommend deep fat frying or frying in a microwave oven. Hot oil can damage oven parts and utensils and even result in skin burns.
28. Plastic wrap : Use only those types designed for microwave oven use and avoid forming an air-tight seal. Fold back a small corner or cut a small slit to allow steam to escape.
29. Stay near the appliance while it is in use and check cooking progress frequently. Leaving the appliance unattended may reslut in overcooked food and possibly a fire in your oven.
30. Foods cooked in liquids (such as pasta) may tend to boil over more rapidly than foods containing less moisture. Should this occur, refer to the Care and Cleaning section for insturctions on how to clean the inside of the oven.
31. Do not use a thermometer in food you are microwaving unless the thermometer is designed or recommended for use in the microwave oven.
32. Plastic cookware designed for microwave cooking is very useful, but should be used carefully. Even microwave-safe plastic may not be as tolerant of overcooking conditions as are glass or ceramic materials and may soften or char if subjected to short periods of overcooking. In longer exposures to overcooking, the food and cookware could ignite.
    For these reasons:1) Use microwave-safe plastics only and use them in strict compliance

with the cookware manufacturer's recommendations. 2) Do not subject empty cookware to microwaving. 3) Do not permit children to use plastic cookware without complete supervision.

33. Do not store anythig directly on top of the microwave oven surface when the oven is in operation.
34. TV dinners may be microwaved in foil trays less than 3/4" deep; remove top foil cover and return tray to box. When using metal in microwave oven, keep metal at least 1 inch away from the sides of the oven.
35. Do not defrost frozen beverages in narrow necked bottles.
36. Cookware may become hot because of heat transferred from the heated food. Potholders may be needed to handle the cookware.
37. Do not try to melt paraffin wax in the oven. Paraffin wax will not melt in a microwave oven because it allows microwaves to pass through it.
38. Never use sharp-edged utensils in or near the oven.
39. Hot foods and steam can cause burns. Be careful when opening containers of hot food, including popcorn bags, cooking pouches and boxes. To prevent possible injury, direct steam away from hands and face.
40. Clean the vent hood often. Do not allow grease to build up on the hood or the filter.
41. Use care when cleaning the vent hood filter. Corrosive cleaning agents, such as lye-based oven cleaners, may damage the filter.
42. When flaming foods are under the hood, turn the fan on.

SAVE THESE INSTRUCTIONS

Installation Recommendations

Remove all packing materials both outside and inside the oven before using the oven. The oven requires free movement of air for proper operation. Do NOT block air vents located by the top air grill and underneath the oven.

Grounding Instructions

This appliance must be grounded. In the event of an electrical short circuit, grounding reduces the risk of electric shock by providing an escape wire for the electric current. This appliance is equipped with a cord having a grounding wire with a grounding plug. The plug must be plugged into a 120v, 15amp. outlet that is properly installed and grounded.
Consult a qualified electrician or service technician if the grounding instructions are not completely understood or if doubt exists as to whether the appliance is properly grounded.

⚠ ***WARNING* - Improper use** of the grounding plug can result in a risk of electric shock.

Where standard two-prong wall receptacle is encountered, it is your personal reponsibility and obligation to have it replaced with a properly grounded three-prong wall receptacle.
Do not under any circumstance cut or remove the third (ground) prong from the power cord. Do not use an adapter plug with this appliance. See pages 1 and 2 of the Installation Manual for acceptable extension cord specifications.

Interference Note

Microwave ovens generate radio frequency energy during operation and if not installed properly may cause interference to radio and television reception. You can determine if this unit is causing interference by turning it on and off while the interference is occurring. If interference occurs, it may be corrected by one or more of the following measures:

- clean door and seal surfaces of the oven;
- reorient the television or radio receiving antenna;
- the oven with respect to the television or radio receiver, and/or
- Plug the oven into a different oulet so that it and the television or radio receiver are on different circuits.

If the interference persists, you may want to consult an experienced radio/television technician for additional information.

Automatic Fan Protection feature

The cooking range installed under the microwave oven may, under some heavy usage conditions, cause temperatures high enough to overheat some internal parts of the microwave oven.
To prevent overheating from taking place, the exhaust fan is designed to automatically turn on at a low speed if excessive temperatures occur. Should this happen, the fan cannot be manually turned off, but it will automatically turn off when the internal parts have cooled. The fan may stay on for up to an hour after the range and microwave oven controls have been turned off.

Microwaving Tips

- Make sure all cookware used in your microwave oven is suitable for microwaving. Most glass cooking dishes, measuring cups, custard cups, pottery or china dinnerware, which does not have metallic trim or glaze with metallic sheen, can be used.
- If you are not sure if a dish is microwave-safe, use this test: Place in the oven the dish you are testing and a glass measuring cup filled with one cup of water. Set the measuring cup either in or next to the dish.

  Microwave 1 minute at high. If the dish heats, it should not be used for microwaving. If the dish remains cool and only the water in the cup heats, then the dish is microwave-safe.
- Paper towels, waxed paper and plastic wrap can be used to cover dishes in order to retain moisture and prevent spattering. Be sure to vent plastic wrap so steam can escape.

Safe and Unsafe Materials

Materials you can use in microwave oven

Utensils	Remarks
Aluminum foil	Shielding only. Small smooth pieces can be used to cover thin parts of meat or poultry to prevent overcooking. Arcing can occur if foil is too close to oven walls. The foil should be at least 1 inch (2.5cm) away from oven walls.
Browning dish	Follow manufacturer's instructions. The bottom of browning dish must be at least 3/16 inch (5 mm) above the turntable. Incorrect usage may cause the turntable to break.
Dinnerware	Microwave-safe only. Follow manufacturer's instructions. Do not use cracked or chipped dishes.
Glass jars	Always remove lid. Use only to heat food until just warm. Most glass jars are not heat resistant and may break.
Glassware	Heat-resistant oven glassware only. Make sure there is no metallic trim. Do not use cracked or chipped dishes.
Oven cooking bags	Follow manufacturer's instructions. Do not close with metal tie. Make slits to allow steam to escape.
Paper plates and cups	Use for short–term cooking/warming only. Do not leave oven unattended while cooking.
Paper towels	Use to cover food for reheating and absorbing fat. Use with supervision for a short-term cooking only.
Parchment paper	Use as a cover to prevent splattering or a wrap for steaming.
Plastic	Microwave-safe only. Follow the manufacturer's instructions. Should be labeled "Microwave Safe". Some plastic containers soften as the food inside gets hot. "Boiling bags" and tightly closed plastic bags should be slit, pierced or vented as directed by instructions on package.
Plastic wrap	Microwave-safe only. Use to cover food during cooking to retain moisture. Do not allow plastic wrap to touch food.
Thermometers	Microwave-safe only (meat and candy thermometers).
Wax paper	Use as a cover to prevent splattering and retain moisture.

Materials to be avoided in microwave oven

Utensils	Remarks
Aluminum tray	May cause arcing. Transfer food into microwave-safe dish.
Food carton with metal handle	May cause arcing. Transfer food into microwave-safe dish.
Metal or metal-trimmed utensils	Metal shields the food from microwave energy. Metal trim may cause arcing.
Metal twist ties	May cause arcing and could cause a fire in the oven.
Paper	May cause a fire in the oven.
Plastic foam	Plastic foam may melt or contaminate the liquid inside when exposed to high temperature.
Wood	Wood will dry out when used in the microwave oven and may split or crack or begin to smoke.

Touch Control Panel

The Touch Control Panel allows you to set the oven controls with the press of a finger.
It's designed to be easy to use and understand.

1. **DISPLAY** - Displays time of day, time or power level being used, cooking mode and instructions.
2. **POWER LEVEL** - Press this pad if you want to change from automatic Power Level 10 (High) for cooking.
3. **TIME COOK** - Press this pad to set the Microwave cooking time.
   • Power Level 10 (High) is automatic but lower heat levels may be programmed.
4. **KEEP WARM** - Press this pad and safely keep food warm for up to 30 minutes.
5. **DEFROST** - Press this pad to set defrosting time or defrosting weight.
6. **BEVERAGE** - Press this pad to reheat a beverage.
7. **POPCORN** - Press this pad to cook prepackaged microwave popcorn weight 3.5/3.0/1.75 ounces.
8. **MELT/SOFTEN** - Press this pad to melt or soften Butter, Chocolate, Ice Cream and Cheese.
9. **POTATO** - Press this pad to cook Potato. The microwave oven sensor will automatically adjust the cooking time to the type and amount of food.
10. **FROZEN ENTREE** - Press this pad to cook Frozen Entree. The microwave oven sensor will automatically adjust the cooking time to the type and amount of food.
11. **REHEAT** - Press this pad to reheat food. The microwave oven sensor will automatically adjust the cooking time to the type and amount of food.
12. **FROZEN VEGETABLES** - Press this pad to cook Frozen vegetables. The microwave oven sensor will automatically adjust the cooking time to the type and amount of food.
13. **NUMBER PADS** - Press these pads to enter cooking time, defrosting time or weight, time of day, power level.
14. **EXPRESS COOK** - Press these pads to set 1-6 minutes preset cooking time at 100% power level.
15. **START/ADD 30 SEC** - After all selections are made, press this pad to start the oven or timer. Also press this pad for 30 seconds instant "ON" cooking time or to add 30 seconds of cooking time as the timer is counting down.
16. **STOP/CANCEL** - When pressed once, it pauses the oven operation. When pressed twice, it resets the oven and erases all settings (except time of day).
    Also press and hold this pad for 3 seconds to set child safety lock function.
17. **TURNTABLE On-Off** - Press this pad to turn turntable on or off.
18. **TIMER** - Press this pad to use as a minute timer, delay cooking, hold setting after cooking. Also press and hold this pad for 3 seconds to set sound on/off.
19. **CLOCK** - Press this pad to enter time of day. Also press and hold this pad for 3 seconds to set power save mode.
20. **FILTER RESET** - Press and hold this pad for 3 seconds to reset time after replacing the filter. Charcoal filters must be replaced every 6 months.
21. **VENT FAN** - Press this pad to turn the fan on high, low or off.
22. **LIGHT** - Press this pad to turn on or off the cooktop light.

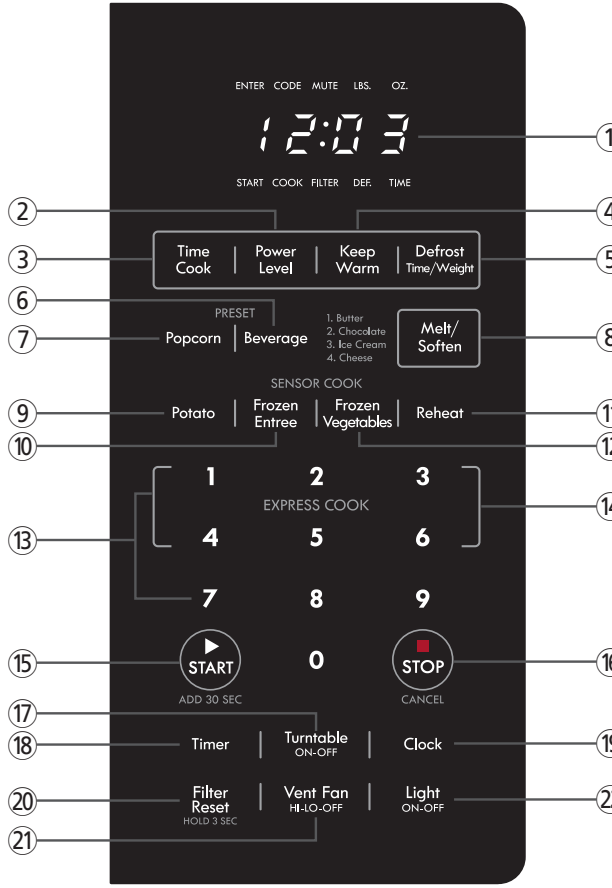

- Each time a pad is pressed, a BEEP will sound.
- When **STOP/CANCEL Pad** is pressed during oven operation, the oven will stop, however, all programmed information is retained. To clear all information, press the **STOP/CANCEL Pad** again.

Note: *Styling and features may differ slightly depending on model.*

Oven Features at a Glance

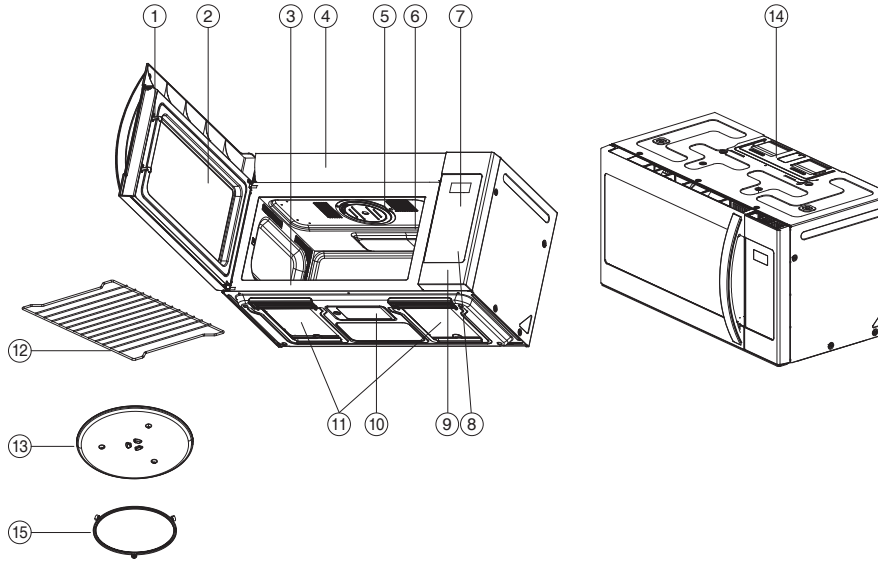

1. **DOOR LATCHES**
2. **WINDOW with METAL SHIELD -** Screen allows cooking to be viewed while keeping microwaves confined in oven.
3. **MODEL NUMBER PLATE -** Located on the front wall of the microwave oven.
4. **CHARCOAL FILTER (behind Vent Grille)**
5. **OVEN LIGHT**
6. **WAVEGUIDE COVER** Protects the microwave outlet from splashes of cooking foods.
7. **TOUCH CONTROL PANEL and DIGITAL DISPLAY -** For detailed information on each feature, see Features Diagram section.
8. **HOOD CONTROLS**
   Vent Fan - Press High, Low or Off.
   Light - Press On or Off
9. **COOKTOP LIGHT**
10. **GREASE FILTERS**
11. **HANDLE FILTERS -** Use to insert Grease Filters.
12. **METAL RACK -** Use for extra space when cooking with more than one container at the same time.
13. **TURNTABLE / GLASS TRAY -** Composed of glass tray and roller guide. The roller guide is placed first in the bottom of the microwave and supports the glass tray. Both parts must be in place when using the microwave oven.
14. **VENTILATION MOTOR -** Your microwave oven is designed for adaptation to the following three types of ventilation. (Recirculation ventilation system, Vertical ventilation system,Horizontal ventilation system) See installation manual to Select the type of ventilation required for your installation.
15. **Guide Roller Ring**

Operating Basics

SETTING THE CLOCK

When the oven is first plugged in, the display will show " : 0" and a tone will sound. If the AC power ever goes off, the display show " : 0" when the power comes back on.

1. Press the **CLOCK pad**. The ENTER, TIME indicators blink and "**12H**" is displayed.
   • This is a 12 hour clock system.
2. Press the **CLOCK pad** once more. "**24H**" is displayed.
   • This is a 24 hour clock system.
   • This oven has multiple clock systems. If you want 12 hour clock system, omit this step.
3. Enter the correct time of day by pressing the number pads in sequence.
   • If you selected 12 hour clock system, this digital clock allows you to set from 1:00 to 12:59. If you selected 24 hour clock system, this digital clock allows you to set from 0:00 to 23:59.
4. Press the **CLOCK pad**. The display stops blinking, and the colon starts blinking.

NOTE: (1) If you attempt to enter an incorrect time, the time will not be set and a error signal tone will sound. Press the **CLOCK pad** and re-enter the time.
(2) If you want to set power save mode, press and hold **CLOCK pad** for 3 seconds. For detailed information on this feature, see Operating Basics section, page 21.

TIMER MODE

Timer operates as a minute timer. Timer operates without microwave energy.

HOW TO USE AS A MINUTE TIMER

1. Press **TIMER pad**. The ENTER, TIME indicators blink and " **: 0**" is displayed.
2. Press the amount of time you want to count down. The display will show what you pressed.
   • Your oven can be programmed for 99 minutes 99 seconds. (99:99)
3. Press **START pad**.

• When you press **START pad**, The TIME indicator starts blinking and the display counts down the time remaining in TIMER mode. When TIMER mode ends, you will hear 3 beeps.

NOTE: If you want to turn sound on or off, press and hold **TIMER pad** for 3 seconds. For detailed information on this feature, see Operating Basics section, page 20.

HOW TO USE TO DELAY THE START OF COOKING

1. Press **TIMER pad**. The ENTER, TIME indicators blink and " : 0" is displayed.
2. Press the amount of time you want to delay. The display will show what you pressed.
   • Your oven can be programmed for 99 minutes 99 seconds. (99:99)
3. Press **TIME COOK pad** to program the desired cooking time for food to be cooked.
4. Press **START pad**.

• When you press **START pad**, the TIME indicator starts blinking and the display counts down the time remaining in TIMER mode. When TIMER mode ends, the oven will beep. The TIME indicator goes off and COOK indicator starts blinking. The display counts down the time remaining in MICROWAVE mode. When MICROWAVE cook ends, you will hear 3 beeps.

HOW TO USE TO SET A HOLDING TIME

1. Press **TIME COOK pad** to program the desired cooking time for food to be cooked.
2. Press **TIMER pad**. The ENTER, TIME indicators blink and **" : 0"** is displayed.
3. Press the amount of time you want the oven to hold. The display will show what you pressed.
   • Your oven can be programmed for 99 minutes 99 seconds. (99:99)
4. Press **START pad**.

- When you press **START pad**, The COOK indicator starts blinking and the display counts down the time remaining in MICROWAVE mode. When the MICROWAVE cook ends, the oven will beep. The COOK indicator goes off and TIME indicator starts blinking. The display counts down the time remaining in TIMER mode. When the TIMER mode ends, you will hear 3 beeps.

TIME DEFROSTING

When TIME DEFROST is selected, the automatic cycle divides the defrosting time into periods of alternating defrost and stand times by cycling on and off.

1. Press **DEFROST pad** once. The DEF indicator lights and ENTER, TIME indicators blink, " **: 0**" is displayed.
2. Press number pads for the desired defrosting time. The display will show what you pressed.
   • Your oven can be programmed for 99 minutes 99 seconds. (99:99)
3. Press **START pad**.

- When you press **START pad**, the DEF indicator starts blinking to show the oven is in the TIME DEFROST mode. The display counts down the time to show you how much defrosting time is left in the TIME DEFROST mode. The oven beeps during the defrosting cycle to signal that the food needs to be turned or rearranged. When the defrosting time ends, you will hear 3 beeps.

WEIGHT DEFROSTING

WEIGHT DEFROST lets you easily defrost food by eliminating guesswork in determining defrosting time. Follow the steps below for easy defrosting.

1. Press **DEFROST pad** twice. The DEF. indicator lights and ENTER, LBS indicators blink, **"0.0"** is displayed.
2. Press number pads for the desired defrosting weight. The display will show what you pressed.
   • Your oven can be programmed for 0.2 to 6.0 lbs.
3. Press **START pad**.

- The defrosting time is automatically determined by the weight selected.
- When you press **START pad**, the DEF indicator starts blinking and the defrosting time counts down in the display window. The oven beeps during the defrosting cycle to signal that the food needs to be turned or rearranged. When the defrosting time ends, you will hear 3 beeps.

MELT/SOFTEN

The melt/soften feature can be used to melt or soften butter, chocolate, ice cream and cheese. See the chart for specific settings to use.

1. Press **MELT/SOFTEN pad** once for butter, twice for chocolate, three times for ice cream, four times for cheese.
   The display will show what you pressed.
2. Press **START pad**.

MELT/SOFTEN ITEM CHART

PRESS PAD	DISPLAY	SOFTEN ITEM	WEIGHT
Once	S--1	Butter	1/2 cup
twice	S--2	Chocolate	8 oz.
Three Times	S--3	Ice Cream	1/2 gallon
Four Times	S--4	Cheese	1 plate

KEEP WARM

KEEP WARM feature maintains food at a warm temperature for 30 minutes.

1. Press **KEEP WARM pad**. The display shows "**30:00**".
2. Press **START pad**.

- When the cooking time ends, you will hear 3 beeps.

POWER LEVEL

Ten power levels are available.
Power level 0 is also available if you want to program a timed in-oven standing time.
After entering Time Cook digits and prior to starting operation, press Power Level and "PL10" will display.
Adjust the power by pressing a number pad as indicated in the table below.

Level	10	9	8	7	6	5	4	3	2	1	0
Power	100%	90%	80%	70%	60%	50%	40%	30%	20%	10%	0%
Display	PL10	PL-9	PL-8	PL-7	PL-6	PL-5	PL-4	PL-3	PL-2	PL- 1	PL-0

TIME COOK

1. Press **TIME COOK pad**. The COOK indicator lights and ENTER, TIME indicators blink., " **: 0**" is displayed.
2. Press number pads for the cooking time. The display will show what you pressed.
   • Your oven can be programmed for 99 minutes 99 seconds. (99:99)
3. Press **POWER LEVEL pad**. The display will show **PL10** for 100% power.
4. Press number pads for power level (0~10). The display will show PL-0 ~ PL10.
5. Press **START pad**.
   • If you skip 3 and 4 step, 100% power is automatic.

- When you press **START pad**, the COOK indicator starts blinking to show the oven is cooking. The display counts down the time to show how much cooking time is left. When the cooking time ends, you will hear 3 beeps.

NOTE: Using lower power levels increases the cooking time which is recommended for foods such as cheese, milk and slow cooking of meats.

COOKING IN TWO STAGES

This feature lets you program two sequential operations such as defrosting and cooking or cooking using two different power levels. It automatically changes power settings and cooking time.

Defrosting + Cooking

1. Press **Defrost pad** once. The DEF indicator lights and ENTER, TIME indicators blink, " **: 0**" is displayed.
2. Press number pads for the defrosting time you want. The display will show what you pressed.
   • Your oven can be programmed for 99 minutes 99 seconds. (99:99)
3. Press **TIME COOK pad**. The COOK indicator lights and ENTER, TIME indicators blink., " **: 0**" is displayed.
4. Press number pads for the cooking time. The display will show what you pressed.
   • Your oven can be programmed for 99 minutes 99 seconds. (99:99)
5. Press **POWER LEVEL pad**. The display will show PL10 for 100% power.
6. Press number pads for power level (0~10). The display will show PL-0 ~ PL10
7. Press **START pad**.
   • If you skip 5 and 6 step, 100% power is automatic.

- When you press **START pad**, the DEF and COOK indicators come on to confirm the power levels selected. The DEF indicator starts blinking to show you that the oven is in TIME DEFROST mode.
  The display counts down the time remaining in TIME DEFROST mode. When the oven beeps, turn over, break apart and/or redistribute the food. At the end of TIME DEFROST mode, the oven will beep and start MICROWAVE cook.
  The DEF indicator goes off and the COOK indicator starts blinking. The display counts down the time remaining in MICROWAVE mode. When MICROWAVE cook ends, you will hear 3 beeps.

Cooking + Cooking

1. Press **TIME COOK pad**. The COOK indicator lights and ENTER, TIME indicators blink., " **: 0**" is displayed.
2. Press number pads for the cooking time. The display will show what you pressed.
   • Your oven can be programmed for 99 minutes 99 seconds. (99:99)
3. Press **TIME COOK pad**. The COOK indicator lights and ENTER, TIME indicators blink., " **: 0**" is displayed.
4. Press number pads for the cooking time. The display will show what you pressed.
   • Your oven can be programmed for 99 minutes 99 seconds. (99:99)
5. Press **POWER LEVEL pad**. The display will show PL10 for 100% power.
6. Press number pads for power level (0~10). The display will show PL-0 ~ PL10
7. Press **START pad**.
   • If you skip 5 and 6 step, 100% power is automatic.

- When you press **START pad**, the COOK indicator starts blinking to show the oven is in cook for stage 1.
  At the end of stage 1, the oven will beep and start stage 2. The display counts down the time remaining in stage 2 mode. When stage 2 ends, you will hear 3 beeps.

ADD 30 SEC

ADD 30 SEC allows you to reheat for 30 seconds at 100% (full power) by simply pressing the **START/ADD 30 SEC pad**. By repeatedly pressing the **START/ADD 30 SEC pad**, you can also extend reheating time to 99 minutes 99 seconds by 30 second increments.

1. Press the **START/ADD 30 SEC pad**.
   ":30" is displayed and the oven starts reheating.

NOTE: ADD 30 SEC cannot be used while the sensor is detecting the vapor emitted from the food during sensor cooking such as Potato, Frozen Entree, Frozen Vegetables or Sensor Reheat.

EXPRESS COOK

Express Cook is a quick way to set cooking time from 1-6 minutes at 100% (full power).

1. Press one of the **EXPRESS COOK pads** (from 1-6) for 1-6 minutes of cooking at 100% (full power). The display will show what you pressed.
   After 1.5 seconds, the display is changed into cooking time and the oven starts cooking.

ONE TOUCH COOK(PRESET)

One touch cooking allows you to cook or reheat many of your favorite foods by pressing just one pad. To increase quantity, press the chosen pad until the number in the display is same as desired quantity to cook.

POPCORN

1. Press **POPCORN pad** once for 3.5 oz bag, twice for 3.0 oz bag or three times for 1.75 oz bag.
   When you press **POPCORN pad** once, " 3.5 " is displayed.
2. Press **START pad**.

NOTE: (1) Use prepackaged room-temperature microwave popcorn.
(2) Place bag in oven according to manufacturer's directions.
(3) Pop only one bag at a time.
(4) After popping, open bag carefully: popcorn and steam are extremely hot.
(5) Do not reheat unpopped kernels or reuse bag.
(6) Do not leave oven unattended while popping popcorn.

CAUTION: If prepackaged popcorn is of a different weight than the recommended weight, do not use the popcorn pad. Follow the manufacturer instruction.

BEVERAGE

1. Press **BEVERAGE pad** once for 1 cup, twice for 2 cups or three times for 3 cups.
   When you press **BEVERAGE pad** once, " 1 " is displayed.
2. Press **START pad**.

*** BEVERAGE * : 7 oz/cup(mug)**

- 1 cup (7 oz total volume) : Press **BEVERAGE** once.
- 2 cups(14 oz total volume) : Press **BEVERAGE** twice.
- 3 cups(20 oz total volume) : Press **BEVERAGE** three times.

SENSOR OPERATIONS

The Sensor Cook categories are designed to detect the increasing humidity released by the food during the cooking process. The microwave oven sensor will automatically adjust the cooking time to the type and amount of food.

Using Sensor Settings

1. After the oven is plugged in, wait 2 minutes before using Sensor Cook.
2. Be sure the exterior of the cooking container and the interior of the oven are dry. Wipe off any moisture with a dry cloth or paper towel.
3. The oven works with foods at normal storage temperature.
4. More or less food than the quantity listed in the chart should be cooked following the guidelines in any microwave cookbook.
5. Do not open the oven door or press STOP/CANCEL pad until cooking time appears on the display window. The measurement of vapor will be interrupted. If this occurs, an error message "Er01" will appear. To continue cooking, press the STOP/CANCEL pad and cook manually. When the sensor detects the vapor emitted from the food, the remainder of cooking time will appear.
   The door may be opened when remaining cooking time appears on the display. At this time, you may stir or season food, as desired.
6. Always use microwave-safe containers and cover them with loose fitting lids or vented plastic wrap. Never use tight sealing plastic containers. They will prevent steam from escaping and this will mislead the sensor, usually causing the food to overcook.
7. Check food for temperature or doneness after cooking. **If food is not completely cooked, enter additional cooking time manually.** Do not use one of the Sensor Cook categories twice in succession on the same food portion. This may result in severely overcooked or burnt food.

Covering Foods

Some foods work best when covered. Use the cover recommended in the Sensor Cook Chart for these foods.

1. Casserole lid.
2. Plastic wrap : Use plastic wrap recommended for microwave cooking. Cover dish loosely; allow approximately 1/2 inch to remain uncovered to allow steam to escape. Plastic wrap should not touch food.
3. Wax paper : Cover dish completely; fold excess wrap under dish to secure. If dish is wider than paper, overlap two pieces at least one inch to cover.

- Be careful when removing any covering to allow steam to escape away from you.

SENSOR COOK

Sensor is semi-conductor device that detects the vapor emitted from the food as it heats. The sensor adjusts the cooking time and power level for various food and quantities and you don't need to enter the weight or quantity of the food.

POTATO

1. Press **POTATO pad**. "**SCPO**" is displayed.
2. Press **START pad**.
   - When the sensor detects the vapor emitted from the food, the remainder of cooking time will appear.

FROZEN ENTREE

1. Press **FROZEN ENTREE pad**. "**SCFE**" is displayed.
2. Press **START pad**.
   - When the sensor detects the vapor emitted from the food, the remainder of cooking time will appear.

FROZEN VEGETABLES

1. Press **FROZEN VEGETABLES pad**. "**SCFU**" is displayed.
2. Press **START pad**.
   - When the sensor detects the vapor emitted from the food, the remainder of cooking time will appear.

REHEAT

1. Press **REHEAT pad**. "**SrH**" is displayed.
2. Press **START pad**.
   - When the sensor detects the vapor emitted from the food, the remainder of cooking time will appear.

SENSOR COOK CHART

PRESS PAD	DISPLAY	WEIGHT	COMMENTS
Potato	SCPO	8 - 24 oz	Before cooking, pierce potato skin with fork 5-6 times. Place potatoes on the turntable.
Frozen Entree	SCFE	8 - 32 oz	Follow the directions that is specific for the microwave oven that is printed on the packaging.
Frozen Vegetables	SCFU	6 - 16 oz	2-4 tbsp water per serving. Cover with lid or vented plastic wrap.
Reheat	SrH	4 - 36 oz	For casseroles, add 2-3tbsp water, cover with lid or vented plastic wrap. • The food type to avoid, Beverage Frozen pizza or Frozen food, Raw food, Biscuits, cake

NOTE: Do not use the Sensor Cook twice in succession on the same food portion.
This may result in severely over-cooked or burnt food.
If additional time is needed after previous cooking, use one of the **ADD 30 SEC pad** or **TIME COOK pad**.

- Use proper container and cover for best sensor cooking result.
- Always use microwave- safe container and cover them with lid or vented plastic wrap. Never use tight sealing plastic containers - They can be prevent steam from escaping and cause food to overcook.
- Be sure the outside of the cooking containers and the inside of the microwave oven are dry before placing food in the oven.

TURNTABLE ON-OFF

For best cooking result, the turntable should be on. However the turntable can be turned off so that it does not rotate when extra large dishes are used.

1. Press **TURNTABLE On-Off pad**.
   The options are displayed for 2 seconds.

NOTE : (1) This option is not available in sensor cook, one touch cook, defrost and melt/soften modes.
(2) Sometimes the turntable can become too hot to touch. Be careful touching the turntable during and after cooking.
(3) Do not run the oven empty.

VENT FAN

The vent fan removes steam and other vapors from surface cooking. You can control the 2-speed fan by pressing the **VENT FAN pad**.

1. Press **VENT FAN pad** once for high fan speed, twice for low fan speed or three times to turn the fan off.
   The options are displayed for 2 seconds.

NOTE : (1) High fan speed can not be used together with microwave cooking.
(2) An automatic fan feature protects the microwave from too much heat rising from the cooktop below it. It automatically turns on for low speed if it senses too much heat. If you have turned the fan on you may find that you cannot turn it off. The fan will automatically turn off when the internal parts are cool.
(3) If there is no user input for 10 hours, cooktop light and vent fan will turn off automatically to save energy.

COOKTOP LIGHT

You can control the light by pressing the **LIGHT pad**.

1. Press **LIGHT pad** once to turn the light on or twice to turn the light off.
   The options are displayed for 2 seconds.

NOTE : If there is no user input for 10 hours, cooktop light and vent fan will turn off automatically to save energy.

MUTE

Audible signals are available to guide you when setting and using your oven.
To mute, press **TIMER pad** for 3 seconds. The MUTE indicator lights. To sound on, press **TIMER pad** for 3 seconds. A beep sounds and the MUTE indicator will be turned off.

FILTER RESET

If your oven is vented to the inside, the charcoal filter should be replaced approximately every 6 months. The charcoal filter can not be cleaned.
REPLACE with - The **FILTER RESET pad** will light up when is time to replace the charcoal filter.
Press and hold **FILTER RESET pad** for 3 seconds after replacing the filter. See page 25.

TO SET POWER SAVE MODE

1. Press the **STOP/CANCEL pad**.
   " **: 0**" or clock appears in the display.
2. Press and hold the **CLOCK pad** for 3 seconds.
   The display will turn off and a beep sounds.
   To operate the oven in power save mode, press any key.
   Then " **: 0**" or clock will be shown and the operation of all function key will be same as in the normal mode.
   But if there is no operation within 10 seconds in clear mode, all the contents of display will disappear.
3. To cancel power save mode simply repeat setting procedure. When the display is on.
   The power save mode will be canceled and a beep sounds.
   The oven is again available for normal use.

CHILD SAFETY LOCK

Child safety lock feature may lock the control panel to prevent the oven from being accidentally started or used by children. To lock, press and hold **STOP/CANCEL pad** for 3 seconds.
A beep sounds and **"Loc"** will be displayed for 3 seconds.
To unlock, press and hold **STOP/CANCEL pad** for 3 seconds. A beep sounds.

NOTE : (1) While the Child Lock is active, only the **STOP/CANCEL pad** works to unlock it.
(2) Microwave oven cannot be used while Child Lock is activated.

TO STOP THE.OVEN WHILE THE OVEN IS OPERATING

1. Press the **STOP/CANCEL pad**.
   • You can restart the oven by pressing the **START pad**.
   • Press the **STOP/CANCEL pad** once more to erase all instructions.
   • You must enter in new instructions.
2. Open the door.
   • You can restart the oven by closing the door and pressing the **START pad**.

NOTE : Oven stops operating when door is opened.

Care and Cleaning

Microwave Oven Interior

The oven interior should be cleaned after each use with a damp cloth to keep it free from grease and soil buildup. Stubborn soils can be removed with a plastic scrub pad. When cleaning interior surfaces and surfaces of door and oven that come together when the door is closed, use only mild, non-abrasive soaps or detergents applied with a sponge or soft cloth.
Odors can be eliminated from the inside of the oven by boiling a solution of one cup of water and several tablespoons of lemon juice in the oven for 5-7 minutes. This also helps loosen any dried soil in the oven. Wipe off excess moisture after use.
Note:

- **Do not** spray or pour liquid cleansers directly onto a surface. Spray or pour cleanser onto a cloth or sponge and then clean.
- **Do not** use abrasive cleaners, oven cleaners, abrasive cleaning pads or steel wool, as they can scratch or dull oven surfaces.
- **Do not** remove or insert knife around the stirrer cover(located on ceiling of oven cavity) to clean, it may damage the cover or affect the cooking performance of your oven.

Oven Bottom

Wash oven bottom with hot sudsy water, rinse and dry. Do not use excessive amounts of water when cleaning the oven, especially around the turntable. Do not allow water or cleaning agents to seep into turntable gears located underneath.

Glass Tray/Turntable

Allow to cool before removing and cleaning. Wash in soapy water or dishwasher.

Roller Guide

Clean frequently to prevent excessive noise. Wash in soapy water or dishwasher.

Oven Exterior

Wipe the outside of your oven with a soapy cloth, rinse and dry. Do not use abrasive cleaners. They may scratch the surface.

Light Compartment

Clean off the grease and dust on the light compartment cover on the bottom side of the microwave oven often with warm water and detergent.

Control Panel

Wipe with a damp cloth. Dry. Do not spray cleaners directly on panel. Spray cleaners on cloth and then wipe.

The Exhaust Feature

The exhaust hood feature on your microwave oven is equipped with two metal filters which collect grease. When the fan is being operated, air is drawn up through the filters and is then discharged through the venting to the outside or through the charcoal filters if not vented to the outside.

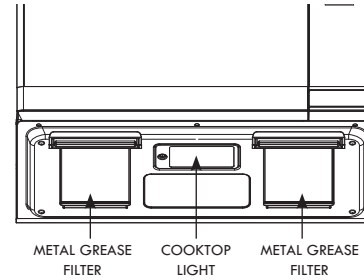

Reusable Grease Filters

The reusable grease filters should be cleaned at least once a month. Never operate the microwave without the filters in place. In situations where flaming might occur on surfaces below the hood, filters will stop the entry of flames into the unit.

To Remove Grease Filter

To remove the grease filter holder, pull the tab toward the front of the oven. Repeat for the other grease filter holder.
To remove the grease filter from the holder, pull using the "finger hold" to assist as shown in below image.

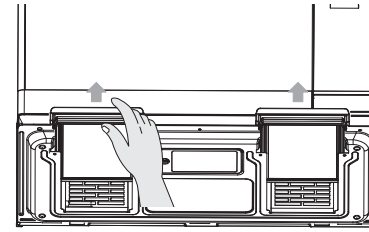

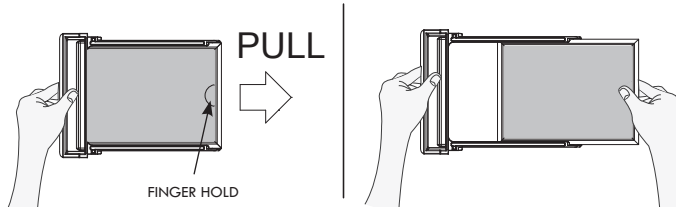

To clean Grease Filter

To clean grease filters, soak and then agitate filter in solution of hot water and detergent. Do not use ammonia or ammonia products because they will darken the metal. Light brushing can be used to remove embedded dirt. Rinse, shake and remove moisture before replacing.

To Replace Grease Filter

To replace the grease filter, slide the grease filter into the grease filter holder. Insert the grease filter holder into the designated area of the bottom of the oven. Repeat for the other grease filter.

Light Replacement

Cooktop Light

When replacing the cooktop light, make sure that you are wearing gloves to avoid injury from the heat of the lamp.

1. Unplug the oven or turn off the power at the main power supply.
2. Remove the screw from the light cover and lower the cover until it stops.
3. Gently unscrew the bulb(s). Be sure bulb(s) to be replaced are cool before removing.
4. Replace with 30-watt incandescent bulb(s) available from your authorized dealer. High intensity 30-watt bulb(s) which are available in supermarkets and hardware stores, may also be used for replacements.
5. Replace the light cover and mounting screw.
6. Turn the power back on at the main power supply.

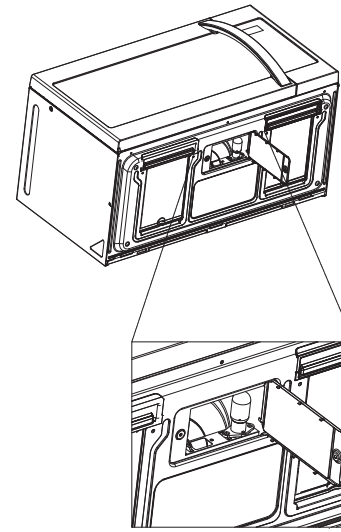

Oven Light

When replacing the cooktop light, make sure that you are wearing gloves to avoid injury from the heat of the light.

1. Unplug the oven or turn off the power at the main power supply.
2. Remove the vent grille mounting 3 screws and open the door.
3. Slide the grille air to the left, then pull it straight out.
4. Remove the charcoal filter, if present

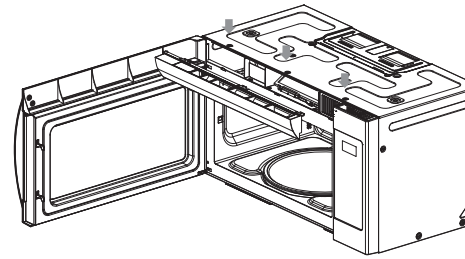

5. Pull the hook a little and remove light cover.
6. Replace the light bulb with 30-watt bulb. available from your authorized dealer.
7. Replace the light cover.
8. Replace the grille air and 3 screws and close the door.
9. Plug the oven in or turn on the power at the main power supply.

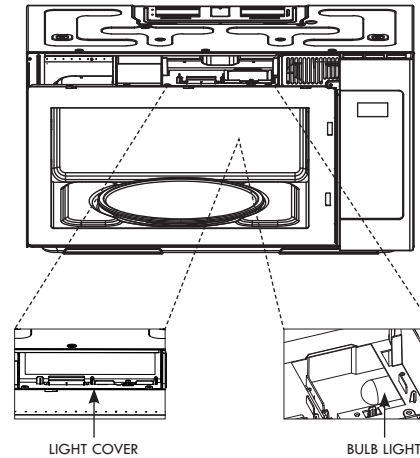

Charcoal Filter

If your oven is vented to the inside, the charcoal filter should be replaced if it is used for approximately 6 months.

1. Unplug the oven or turn off the power at the main power supply.
2. Remove the grille air mounting 3 screws and open the door.
3. Slide the grille air to the left, then pull it straight out.
4. Push the charcoal filter backwards and remove it.
5. Slide a new charcoal filter into place. The filter should rest at the angle.
6. Replace the grille air and 3 screws and close the door.
7. Plug the oven in or turn on the power at the main power supply.

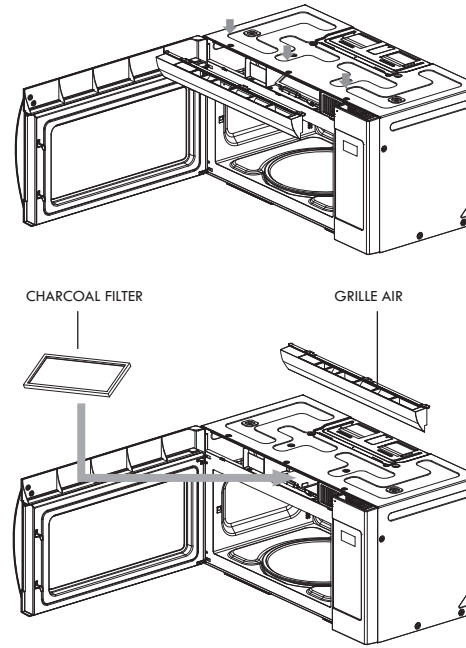

Common Questions and Answers

Q. Can I open the door when the oven is operating?

A. The door can be opened anytime during the cooking operation. The oven will automatically stop cooking and the time setting will maintain until the door is closed and the **START Pad** is pressed.

Q. What causes the oven interior light and display to dim when using a Variable Power Level?

A. This is normal and indicates the oven is operating and cycling properly.

Q. Why does steam and/or vapor escape around the door and moisture droplets form on the inside of the oven door?

A. This in normal occurrence - as food cooks, steam is given off.

Q. What do the various beeps mean?

A. Short beep = any pad is pressed.
Three short beeps = incorrect entry.
One long beep = oven plugged in.
Three long beeps = end of cooking (microwave will turn off).
Series of three short beeps = check food to see if turning or rearranging is needed.

Q. Can the oven be used with the glass tray or roller guide removed?

A. No. Both the glass tray and roller guide must always be used in the oven when cooking.

All these things are normal with your microwave oven.

- Steam or vapor escaping from around the door.
- Light reflection around the door or outer case.
- Dimming oven light and change in blower sound may occur while operating at power levels other than high.
- Dull thumping sound while oven is operating.

Charcoal Filter Kit

There is a recirculating charcoal filter kit included for models that are not vented to the outside. See installation guide for details.

Before You Call

Check the following to be sure a service call is necessary:

If nothing on the oven operates:
- check for a blown circuit fuse or a tripped main circuit breaker.
- check if oven is properly connected to electric circuit in house.
- check that controls are set properly.
- check that the cooking time is set.

If the oven interior light does not work:
- The light bulb may be loose or defective. See page 25 or call a qualified servicer.

If oven will not cook:
- check that control panel was programmed correctly.
- check that door is firmly closed.
- check that **START Pad** was pressed.
- Clock Delay Start or Timer Delay Start may have been set.
- the **Control Lockout** may have been set
- check the area between the door and seal for obstructions.

If oven takes longer than normal to cook or cooks too rapidly:
- be sure the **Power Level** is programmed properly.
- check instructions on food density, etc.
- verify that voltage to the microwave oven is not low.

If the time-of-day clock does not always keep correct time:
- check that the power cord is fully inserted into the outlet receptacle.
- check that the oven is properly grounded.
- try plugging the oven into an outlet on a separate electrical circuit.

If oven floor or glass tray are hot:
- this is normal. The floor is absorbing heat from the food.

If the interior of oven collects moisture:
- this is normal. Food gives off moisture when cooking and the steam collects on the door and the oven surface. Wipe off excess moisture from oven after each use.

If food cooks unevenly:
- refer to your recipe for proper cooking procedures.
- be sure food is evenly shaped.
- be sure food is completely defrosted before cooking.
- check placement of aluminum strips used to prevent overcooking.

If food is undercooked:
• check recipe to be sure all directions (amount, time, and power levels) were correctly followed.
• check household voltage.
• try plugging the oven into an outlet on a separate electrical circuit.
• be sure food was completely defrosted before cooking.

If food is overcooked:
• check recipe to be sure all directions (amount, time, and power levels) were correctly followed.
• the initial temperature of food may have been higher than normal.

If arcing (sparks) occur:
• be sure microwave-safe dishes were used.
• be sure wire twist ties were not used.
• be sure oven was not operated when empty.

If the display shows a time counting down but the oven is not cooking:
• check that door is firmly closed.