DAEWOO ELECTRONICS

LCD TELEVISION

INSTRUCTION MANUAL

DLN-15D3SHS
DLN-17D3SHS
DLN-20D3AHS

IMPORTANT INFORMATION

CAUTION

RISK OF ELECTRIC SHOCK

DO NOT OPEN

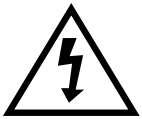

CAUTION : TO REDUCE THE RISK OF ELECTRIC SHOCK,
DO NOT REMOVE COVER (OR BACK)
NO USER-SERVICEABLE PARTS INSIDE.
REFER SERVICING TO QUALIFIED SERVICE PERSONNEL.

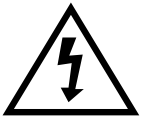

The lightning flash with arrowhead symbol, within an equilateral triangle, is intended to alert the user to the presence of uninsulated "dangerous voltage" within the product's enclosure that may be of sufficient magnitude to constitute a risk electric shock.

The exclamation point within an equilateral triangle is intended to alert the user to the presence of important operating and servicing instructions in the literature accompanying the appliance.

FCC RF INTERFERENCE STATEMENT

NOTE : This equipment has been tested and found to comply with the limit for a Class B digital device, pursuant to Part 15 of the FCC Rules. These limits are designed to provide reasonable protection against harmful interference in a residential installation.

This equipment generates, uses and can radiate radio frequency energy and, if not installed and used in accordance with the instructions, may cause harmful interference to radio communications. However, there is no guarantee that interference will not occur in a particular installation.

If these equipment does cause harmful interference to radio or television reception which can be determined by turning the equipment off and on, the user is encouraged to try to correct the interference by one or more of the following measure.

- Reorient or relocate the receiving antenna.
- Increase the separation between the equipment and receiver.
- Correct the equipment into an outlet on a circuit different from that to which the receiver is connected.
- Consult the dealer or an experienced radio, TV technical for help.
- Only shielded interface cable should be used.

IMPORTANT INFORMATION

WARNING : FCC regulations state that any unauthorized changes or modifications to this equipment not expressly approved by the manufacturer could void the user's authority to operate this equipment. U.S.A. ONLY

Note to CATV system installer : This reminder is provided to call the CATV system installer's attention to Article 820-40 of the National Electrical Code that provides guidelines for proper grounding and, in particular, specifies that the cable ground shall be connected to the grounding system of the building, as close to the point of cable entry as practical.

This product utilizes tin-lead solder, and fluorescent lamp containing a small amount of mercury. Disposal of these materials may be regulated due to environmental considerations. For disposal or recycling information, please contact your local authorities or the Electronic Industries Alliance : www.eia.org

SAFETY PRECAUTIONS

The present set has been designed and manufactured to assure personal safety. Improper use can result in electric shock or fire hazard. The safeguards incorporated in the present unit will protect you if you observe the following procedures in installing, using and servicing. The present unit is fully transistorized and does not contain any element that can be repaired by the user.

- **Read these instructions** : All functional instructions must be read and understood before operating the product.

- **Keep these instructions** : It is recommended to keep these safety guidelines and operating instructions in a safe place for future reference.

- **Heed all warnings** : All warnings on the product and in the instructions must be observed closely.

- **Follow all instructions** : All operating instructions must be followed.

- **Attachments / Accessories** : Only use the attachments / accessories specified by the manufacturer. Using inadequate attachments can result in accidents.

- **Power source** :This product must operate according to the power source indicated on the specification label. If you are not sure of the type of power supply used in your home, consult your dealer or local electric company. For the units designed to operate on batteries or another power source, refer to the operating instructions.

- **Power cord protection** : Protect the power cord from being walked on or pinched particularly at plugs, convenience receptacles, and the point where they exit from the apparatus.

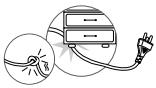

- **Overloading** : Do not overload AC outlets or extension cords. Overloading can cause fire or electric shock.

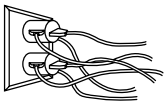

- **Influx of objects and liquids** : Never let objects into the productthrough vents or openings. Due to the high voltage flows in the product, inserting a foreign object in the product can cause electric shock and/or shorten internal elements. For the same reason, be careful not to spill water or other liquids over the product.

- **Servicing** : Do not attempt to service the product yourself. Removing covers can expose you to high voltage and other dangerous conditions. Request a qualified service person to perform servicing.

- **Repair** : Unplug the AC cord from the outlet, and request a qualified service person to perform repairs when:

a. The power cord or plug is damaged.

b. A liquid is spilled on or an object is dropped into the product.

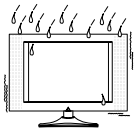

c. The product has been exposed to rain or water.

d. The product does not function properly as described in the operating instructions. Do not touch the controls other than those described in the operating instructions. Improper adjustment of controls out of the instructions can cause damage, which often requires a qualified technician for extensive adjustments.

e. The product has been dropped or damaged.

f. The product displays an abnormal condition. Any noticeable abnormality in the product indicates that the product needs servicing.

SAFETY PRECAUTIONS

- **Replacement parts** : In case the product needs certain parts to be replaced, make sure that the service engineer uses the replacement elements either specified by the manufacturer, or with the same characteristics and performance as original ones. Using unauthorized parts can result in fire, electric shock and/or other danger.

- **Safety checks** :Upon completion of service or repair work, request the service technician to perform safety checks to ensure that the product is in proper operating condition.
- **Polarization** : Do not defeat the safety purpose of the polarized or grounding type plug. A polarized plug has two blades with one wider than the other. A grounding type plug has two blades and a third grounding prong. The wide blade or the third prong is provided for your safety. When the provided plug does not fit into your outlet, consult an electrician for replacement of the obsolete outlet.

Caution : To prevent electric shock, match wide blade of plug to wide slot, fully insert.

Attention : Pour éviter les choc électriques, introluire la lame la plus large de la fiche dans la borne correspondante De la prise et pousser jusqu'au pond.

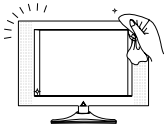

- **Cleaning** : Unplug the AC cord from the AC outlet before cleaning the product. Use only with a dry cloth to clean this apparatus. Do not use liquid or aerosol cleaners.

- **Water and moisture** : Do not use this product near water such as bathtub, washbasin, kitchen sink and laundry tub, swimming pool and in a wet basement. TV set shall not be exposed to dripping or slashing and no objects filled with liquids, such as vases, shall be placed on the TV set.

- **Stand** : Do not place the product on an unstable cart, stand, tripod or table. Unstable installation is likely to make the product fall resulting in serious injuries as well as material damage. Use only the cart, stand, tripod, bracket, or table specified by the manufacturer, or sold with the apparatus.

- When a cart is used, use caution when moving the cart / apparatus combination to avoid injury from tip-over.

- **Ventilation** : The vents and other openings in the cabinet are designed for ventilation. Do not cover or block them since insufficient ventilation can overheat and/or shorten the product 's life span. Do not place the product on the bed, sofa, rug or other similar surfaces since they can block ventilation openings. This product is not designed for built-in installation; do not place the product in an enclosed place such as a bookcase or rack unless proper ventilation is provided or the manufacturer 's instructions are followed.

- The LCD panel used in this product is made of glass. Therefore, it can be broken when the product is dropped or gets shock. Be careful not to be injured by glass pieces in case the panel is broken.

- **Heat sources** :Do not install near any heat sources such as radiators, heat registers, stoves, or other apparatus (including amplifiers) that produce heat.

- The LCD panel is a product of very high technology with 2,359,296 (15 ")/ 2,949,120 (17" Wide) thin film transistors, giving you fine picture details. Occasionally, a few non-active pixels may appear on the screen as a fixed blue, green or red point . Please note that this does not affect your product 's performance.

SAFETY PRECAUTIONS

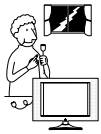

- As a measure of additional protection of this television equipment, unplug this apparatus during lightning storms or when unused for long periods of time. This will prevent the equipment from being damaged by lightning and power-line surges.

- Outside antenna system should not be located in the vicinity of overhead power lines or other electric or power circuits including the place where it can fall onto such power lines or circuits. Installing outside antenna system requires a full care to keep such power lines or circuits out of reach as it may be fatal to touch them.

- If an outside antenna is connected to television equipment, be sure the antenna system is grounded so as to provide some protection against voltage surges and built-up static charges.
  Section 810 of the National Electrical Code provides information concerning proper grounding of the mast and supporting structure as well as of the lead-in wire to an antenna discharge unit, the size of grounding conductors, the location of antenna-discharge unit, the connection to grounding electrodes and the requirements for grounding electrode.

EXAMPLE OF ANTENNA GROUNDING

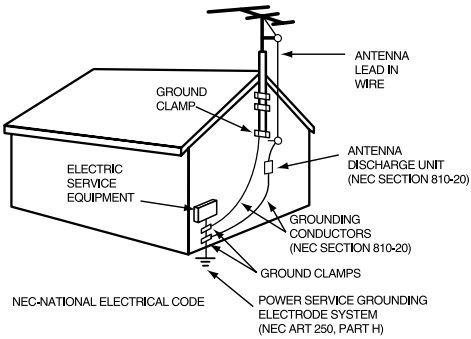

CONTENTS

IMPORTANT SAFEGUARDS **5**

SUPPLIED ACCESSORIES **6**

FUNCTIONAL OVERVIEW **7**
- Front (Control panel) 7
- Remote controller 8

PREPARATION **9**
- Inserting Batteries into the Remote Control Unit 9
- Mains connection 9
- Aerial connection 10
- Connecting external equipment 12

INSTALLATION **15**
- Language selection 15
- Automatic Tuning of TV Channels 15
- Programme Editing 16
- Manual Setup 17

DAILY USE **18**
- Switching On and Off 18
- Recall 18
- Programme Selection 19
- Picture Control 19
- Sound Control 20
- Special Features 21
- Sleep 21
- Teletext (Option) 22
- PC setup 24

WALL/ARM MOUNTING **26**

TROUBLESHOOTING **27**

PRODUCT SPECIFICATIONS **28**

Supplied Accessories

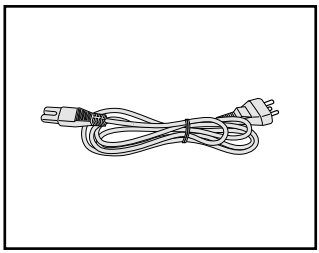

AC cord

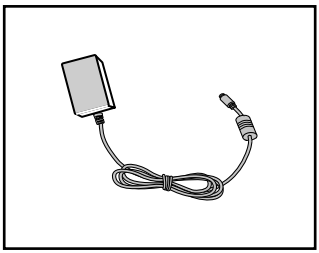

AC adapter

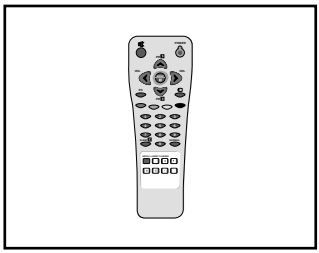

Remote controller

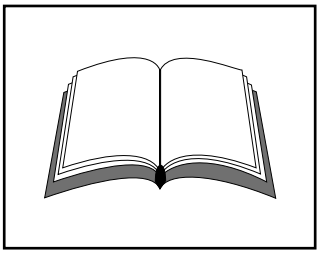

Instruction manual

Functional Overview

Front (Control panel)

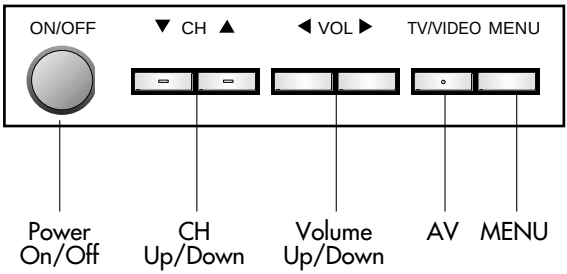

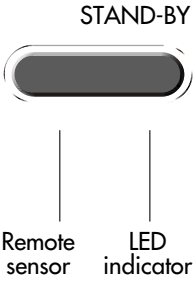

Functional Overview

Remote Controller

[ ] : Teletext function

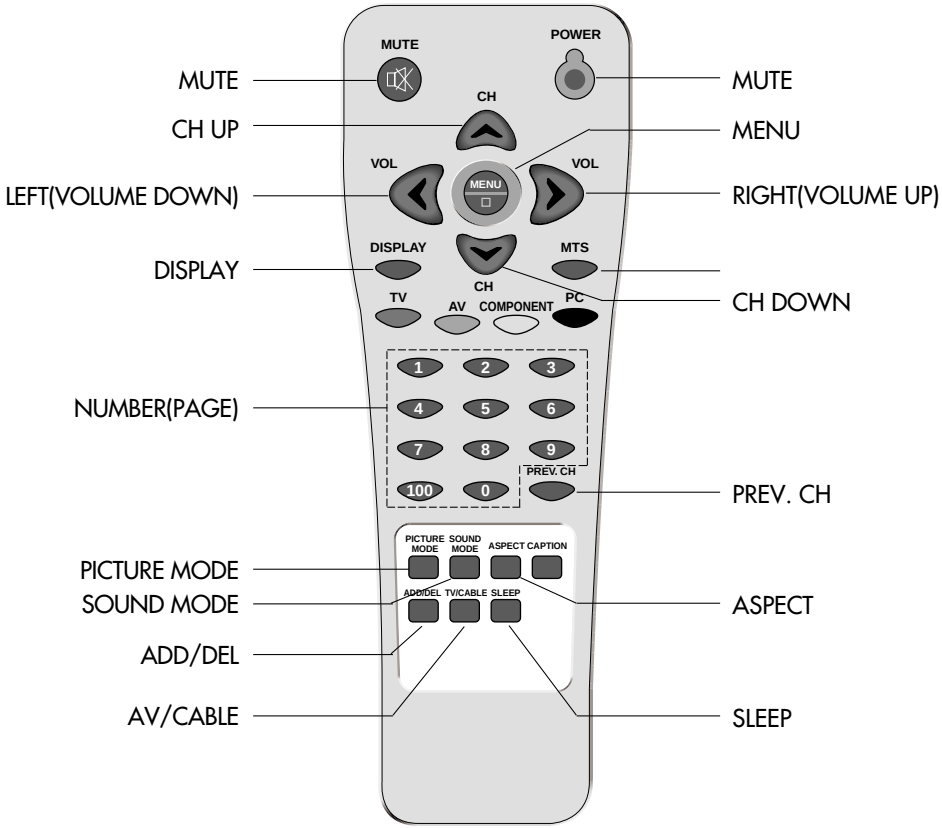

Preparation

Inserting Batteries into the Remote Control Unit

To load the batteries, turn the remote control handset over and open the battery compartment. Insert the batteries (Not supplied, two 1.5v, type R03 or AAA). Make sure that the polarity matches with the (+) and (-) marks inside of the battery compartment.

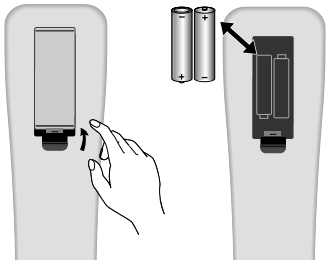

Note: To avoid damage from possible battery leakage, remove the batteries if you do not plan to use the remote control handset for an extended period of time.

Mains Connection

1. Connect the DC plug of the AC adaptor to the **DC 12V(DC 15V-only 20")** input terminal of the set.
2. Connect the AC adaptor and AC cord.
3. Plug the other end of AC cord into a Power outlet with **100V - 240V AC, 50/60Hz.**

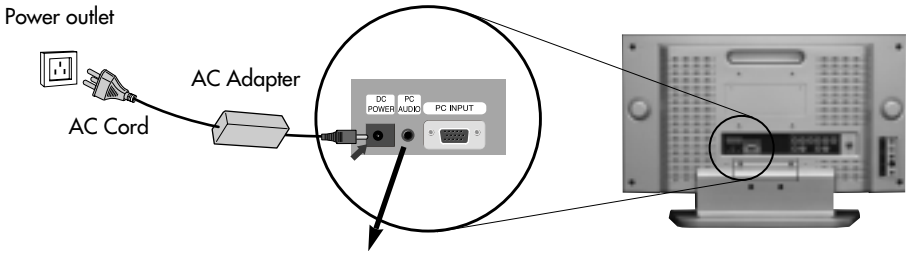

DC 12V input terminal
(DC 20V-only 20")

Connections

ANTENNA CONNECTION

TO CABLE TV (CATV)

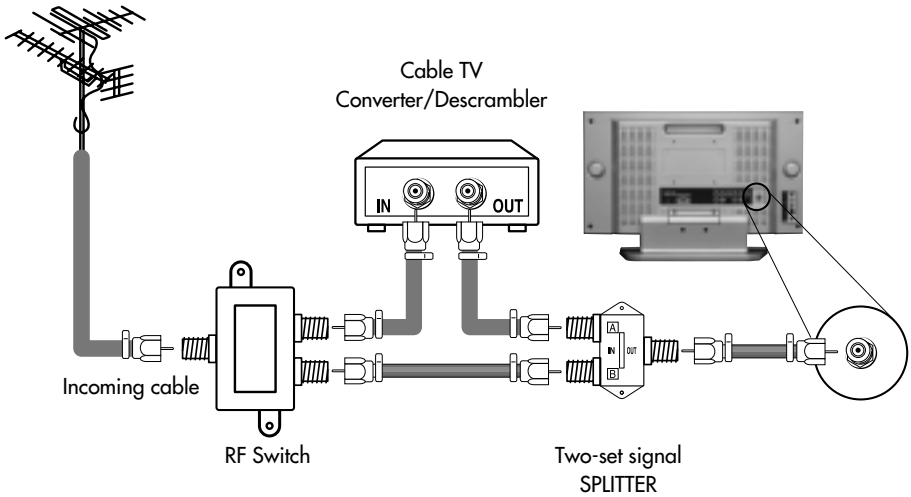

- A 75-ohm coaxial cable connector is built into the set for easy hookup. When connecting the 75-ohm coaxial cable to the set, screw the 75-ohm cable to the ANT. terminal.
- Some cable TV companies offer “premium pay channels”. Since the signals of these premium pay channels are likely to be scrambled, a cable TV converter/descrambler is generally provided to the subscriber by the cable TV company. This converter/descrambler is necessary to watch scrambled channels normally. (Set your TV to channel 3 or 4 as one of them is generally used. If the channel is unknown, consult your cable TV company.) For more specific instructions on installing cable TV, consult your cable TV company. On the next page, a possible using method of the converter/descrambler provided by your cable TV company is explained. Please note: an RF switch provided with two inputs (A and B) is required (not supplied).

Connections

TO WALL ANTENNA SOCKET

If there is a wall antenna socket in apartment house, connect the antenna cable as shown below. (Use the type of antenna cable corresponding to that of wall antenna socket.)

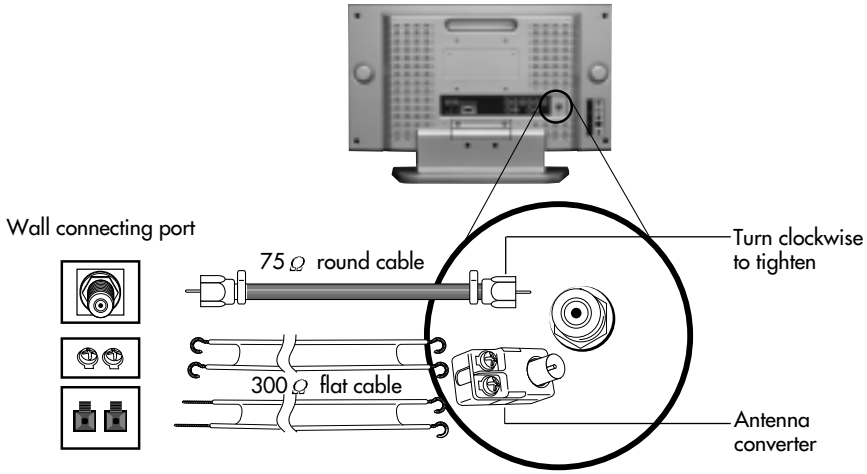

For good quality of image, the antenna requirements of color television reception are more strict than those of black & white television reception. Thus, it is strongly recommended to use good outdoor antenna.
The following is a brief explanation of the type of connections that are provided with the various antenna systems.

1. A 75-ohm system is generally a round cable with F-type connector that can be easily attached to a terminal without tools (not supplied).
2. A 300-ohm system is a flat "twin-lead" cable that can be attached to a 75-ohm terminal through a 300-75-ohm antenna converter (not supplied).

- *If you have a 75-ohm round cable, insert bronze wire and then tighten connecting nut. If you have a 300-ohm flat cable, connect twisted wire to antenna converter and then connect the converter to ANT IN.*
- *When using 75-ohm round cable, do not bend bronze. It may cause poor picture quality.*

Connections

TO OUTDOOR ANTENNA

This type of antenna is usually used at common private house.

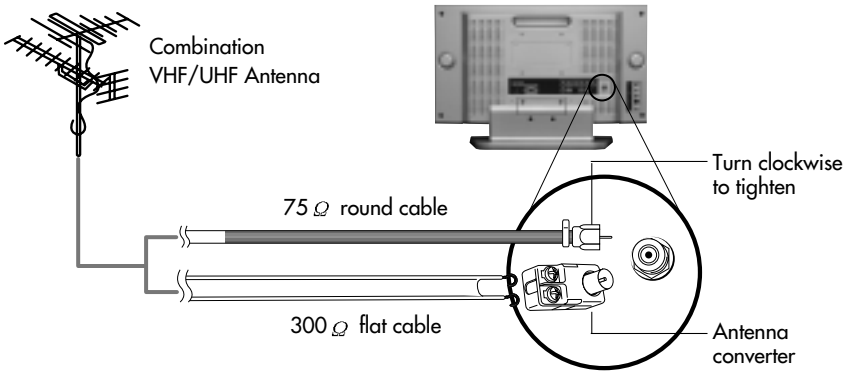

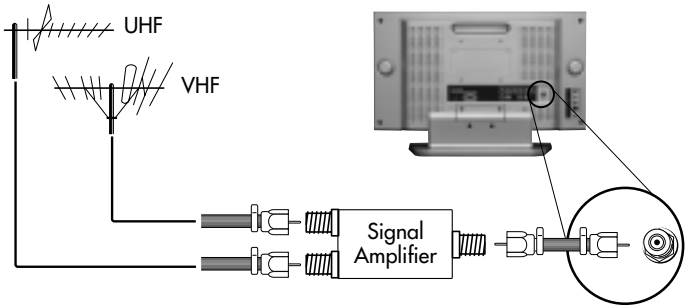

- Use one of the two following diagrams if you connect an outdoor antenna.
  A : Using a VHF/UHF combination outdoor antenna.
  B : Using separate VHF and/or UHF outdoor antennas.
- Connect the outdoor antenna cable lead-in to the ANT IN on the back of TV set.

- *In a poor signal area, you can get better picture quality if you install the antenna like the figure "B".*
- *If an antenna is divided to two TV sets, use "signal divider" for connection.*

Connections

Connecting external equipment

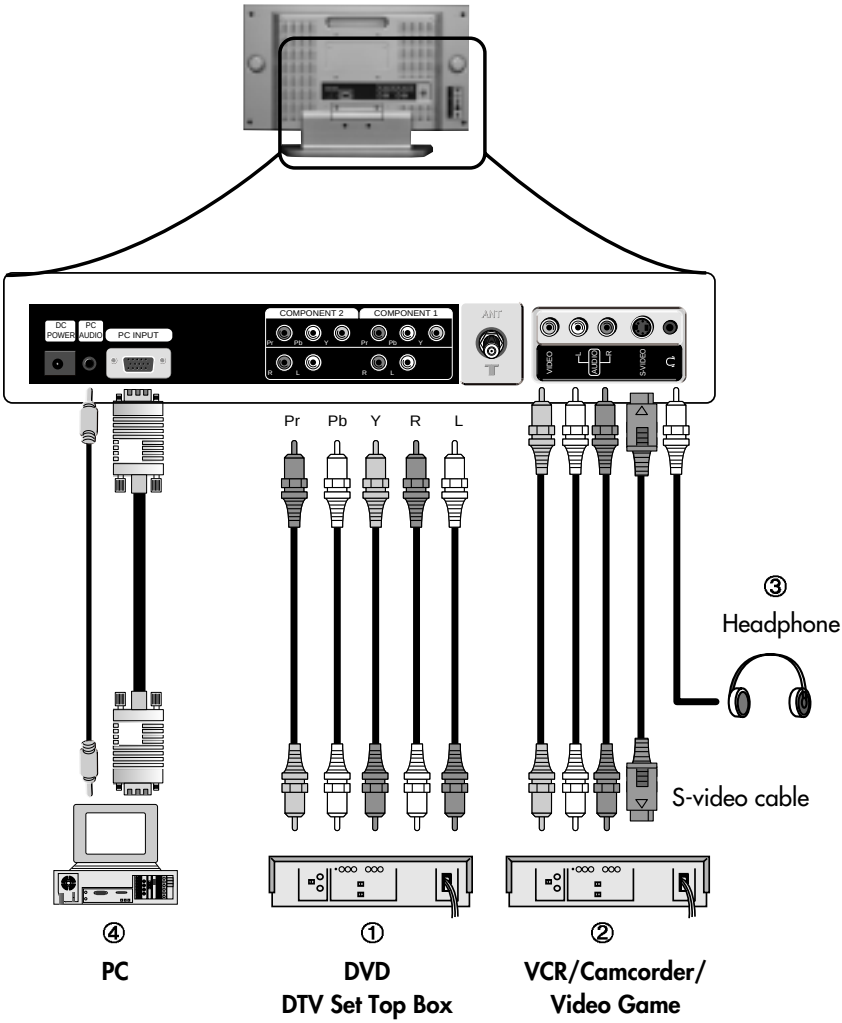

Connections

You can enjoy picture and sound by connecting VCR, DVD player (or DTV Set-Top Box) and PC to the terminals located on the back of TV set. Before connecting an external device, turn the TV set off to avoid any possible damage.

① **DVD or DTV Set-Top Box input terminal [COMPONENT IN]**
These jacks have Y/Pb(Cb)/Pr(Cr) inputs and AUDIO inputs.
These jacks are used to connect a DVD player, DTV Set-Top Box. (Available input mode : 480i, 480p, 720p, 1080i)

② **External AV devices input terminal [AV IN]**
These jacks have VIDEO/AUDIO/S-VIDEO inputs. Connect them to VCR, Camcorder or Video game with RCA or S-VIDEO cable.

* If your AV device has both VIDEO OUT terminal and S-VIDEO OUT terminal, S-VIDEO connection is recommended for better picture quality.

- *VIDEO and S-VIDEO in AV IN share the same jack with AUDIO input. Thus, they can't be used at the same time.*
- *Whenever you connect external equipment system to TV, make sure that all elements are switched off. Refer to the documentation supplied with your equipment for detailed connection instructions and associated safety precautions.*

③ **Headphone Jack**
Insert the headphone plug (3.5mm∅) into this jack. The sound from the speaker will be automatically cut off. You can control the headphone sound with Volume Up/Down (◄ / ►) buttons.

* Headphones are not included in the supplied accessories.

④ **PC In**
Connect the D-sub 15 pin cable and the audio cable with personal computer.

* See page 24 for more information of PC mode.

Basic Operations

SWITCHING ON/OFF

SWITCHING ON

1 If the indicator is not lit, the TV set is powered off. You must press the POWER button of the TV set.
2 Press the POWER button on the remote controller on the TV set when the indicator is red. The TV set will be switched on and the indicator will be changed to green.

SWITCHING OFF

1 To set the TV set back to stand-by mode, press the POWER button on the remote controller on the TV set for 2 seconds. The indicator will become red.
2 Press the POWER button on the TV set to switch the TV set off completely.
  * If you turn the TV off, the present time that you have set will disappear.

- *If you don't use the set for extended periods of time, unplug the AC cord from power outlet.*

TV/AV MODE SELECTION

By pressing the TV/VIDEO button on the TV set, you can
change the mode as follows:
TV → AV → S-Video → Comp1 → Comp2 → PC → TV ....
With the remote controller, you can select the mode as below.

- TV button : Selection for TV input mode.
- AV button : Selection for AV/S-Video input mode.
- PC button : Selection for PC monitor input mode.
- COMPONENT button : Selection for Component input mode.

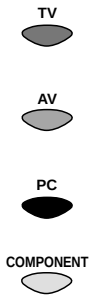

Basic Operations

VOLUME CONTROL

Adjust the volume with VOL (◀ / ▶) buttons.

TO MUTE THE SOUND

Press the MUTE button on the remote controller to cut the sound off. By pressing either the MUTE button or VOL (◀ / ▶) buttons, you can get sound back.

CHANNEL SELECTION

The TV set has 68 channels [AIR02 ~ AIR69] in AIR mode and 125 channels [CATV01 ~ CATV125] in CATV mode. (Refer to next page for each selection.)

DIRECT SELECTION

The numeric buttons are used for direct channel selection. To select two-digit channels, press the second number button within 2 seconds after the first number.

To select 3-digit channels, press '+100' button before pressing the rest of number buttons in order.

- Channel number in green : Memorized channels by automatic search or added channels by user.
  Channel number in white : Skipped channels by automatic search or deleted channels by user.

UP/DOWN SELECTION

You can also select a memorized channel by pressing the CH (▲ / ▼) buttons.

CHANNEL ADJUSTMENT (ONLY IN TV MODE)

Press MENU button to display the MENU screen.
Press VOL up(▶) button to enter into the items below. The color of selected items becomes blue.

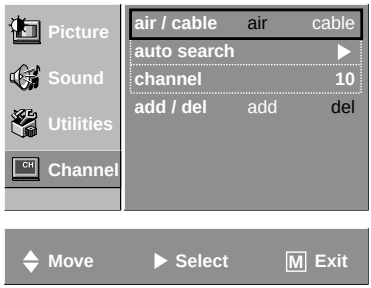

AIR/CABLE SELECTION

1 Move to "AIR/CABLE" by pressing CH (▲/▼) buttons.
2 Press VOL (◀/▶) buttons to select either AIR or CABLE which is appropriate to your antenna system.

CHANNEL AUTO SEARCH

CHANNEL AUTO SEARCH function memorizes all the channels which are being received at real time. Before operating this function, select one between AIR and CABLE.

1 Move to "AUTO SEARCH" by pressing CH (▲/▼) buttons.
2 Press VOL up (▶) button to operate the searching. Wait until the searching ends.

CURRENT CHANNEL NUMBER SELECTION

1 Move to "CURRENT CHANNEL" by pressing CH (▲/▼) buttons.
2 Press VOL (◀/▶) buttons to select a current channel number you want.

- *To interrupt AUTO SEARCH, press MENU button. SEARCH will stop at the current channel and will not add any higher channels.*

ADD OR DELETE CHANNEL

You can add additional channels or erase unwanted channels from TV memory.

1 Move to "CURRENT CHANNEL" by pressing CH (▲/▼) buttons and select desired channel.
2 By pressing VOL (◀/▶) buttons, select ADD for adding the current channel to the TV's memory or select DEL for erasing the channel from the TV's memory.
3 Exit with MENU button. The change is stored.

Menu Adjustment

PICTURE ADJUSTMENT

Press MENU button to display the MENU screen.
Select "PICTURE" by pressing VOL (◀/▶) buttons and press CH down (▼) button to enter into below items.

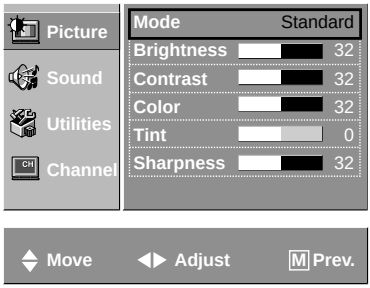

CONTRAST

1 Move to "CONTRAST" by pressing CH (▲/▼) buttons.
2 Press VOL (◀/▶) buttons to adjust the picture contrast.

BRIGHTNESS

1 Move to "BRIGHTNESS" by pressing CH (▲/▼) buttons.
2 Press VOL (◀/▶) buttons to adjust picture brightness.

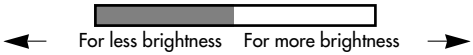

COLOR

1 Move to "COLOR" by pressing CH (▲/▼) buttons.
2 Press VOL (◀/▶) buttons to adjust color intensity.

TINT

1 Move to "TINT" by pressing CH (▲/▼) buttons.
2 Press VOL (◀/▶) buttons to adjust skin color to a more natural tone.

SHARPNESS

1 Move to "SHARPNESS" by pressing CH (▲/▼) buttons.
2 Press VOL (◀/▶) buttons to adjust picture sharpness.

- *For PC or COMPONENT mode (except 480i mode), only "CONTRAST" and "BRIGHTNESS" can be selected.*

SOUND ADJUSTMENT

Press MENU button to display the MENU screen. Select "SOUND" by pressing VOL (▶) buttons, then press CH down (▲/▼) button to enter into the items below.

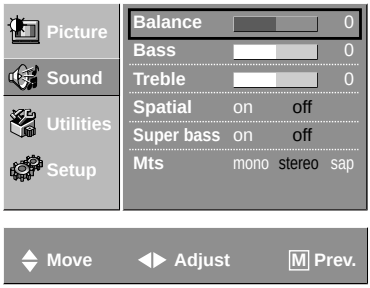

TREBLE

To stress high frequency sound

1 Move to "TREBLE" by pressing CH (▲/▼) buttons.

2 Press VOL (◀/▶) buttons to adjust the treble weaker or stronger.

BASS

1 Move to "BASS" by pressing CH (▲/▼) buttons.

2 Press VOL (◀/▶) buttons to adjust the bass weaker or stronger.

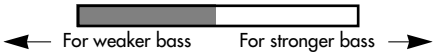

BALANCE

1 Move to "BALANCE" by pressing CH (▲/▼) buttons.

2 Press VOL (◀/▶) buttons to adjust audio output between left and right speakers.

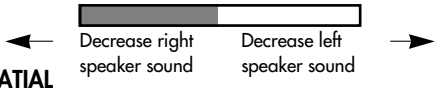

SPATIAL

This function is to work virtual surround sound effect.

1 Move to "SPATIAL" by pressing CH (▲/▼) buttons.

2 Press VOL (◀/▶) buttons to select.

SUPER BASS

1 Move to "SUPER BASS" by pressing CH (▲/▼) buttons.

2 Press VOL (◀/▶) buttons to select.

- *When "MONO" mode is selected, the sound remains mono even if the TV set receives a stereo broadcast. You must switch the mode to "STEREO" if you want to hear stereo sound.*
- *If you get some strange sound on stereo mode in poor signal area or non-dual signal service area, make sure to select MONO mode.*

Menu Adjustment

PC ADJUSTMENT (ONLY IN PC MODE)

PC Mode input format.

Standard	Resolution(Mode)	V-frequency(Hz)	H-frequency(Hz)	15″	17″	20″
MAC	640x480	66	35.00	O	O	O
	832x624	75	49.73	O	O	O
IBM	640x480	60	31.47	O	O	O
	720x400	70	31.47	O	O	O
VESA	640x480(VGA)	72	37.86	O	O	O
	800x600(SVGA)	60	37.88	O	O	O
		72	48.08	O	O	O
	1024x768(XGA)	60	48.37	O	O	X
		70	56.48	O	O	X
	1280x768(WXGA)	60	47.70	X	O	X

Please up-grade the video card driver with the latest version because some of old version video cards may not support the 1280x768 resolution.

In case of inputting the PC signal other than above signals, “OUT OF RANGE” will appear on the screen.

Menu Adjustment

Before adjustment, please setup your PC software...

Even if your actual display-settings screen looks different from the windows below, basic setup methods will be applied in most of the cases.

1 First, click on "**Settings**" on the Windows Start menu. While "Settings" is selected, move the cursor to submenu "**Control Panel**".

2 When the control panel screen appears, click on "**Display**" and a display dialog box will appear.

3 Navigate to the "**Settings**" tab on the display dialog-box. The correct setting of size (resolution) is "**1024 x 768 pixels**". (optical resolution) Check the vertical frequency of your PC. (Available vertical frequency at 1024*768 mode : 60Hz, 70Hz, 75Hz)

Menu Adjustment

Press MENU button to display the MENU screen. Select "PC" by pressing VOL (◀ / ▶) buttons and press CH down (▼) button to enter into the items below.

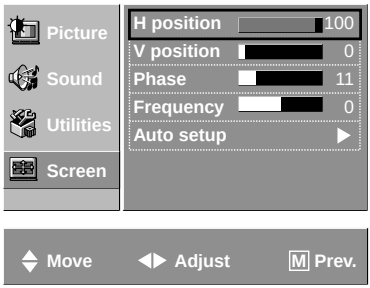

H-POSITION

1 Move to "H-POSITION" by pressing CH (▲/▼) buttons.
2 Press VOL (◀ / ▶) buttons to adjust the horizontal position of displayed image.

before adjustment

after adjustment

V-POSITION

1 Move to "V-POSITION" by pressing CH (▲/▼) buttons.
2 Press VOL (◀ / ▶) buttons to adjust the vertical position of displayed image.

before adjustment

after adjustment

PHASE

(Fine image adjustment in PC monitor mode)

1 Move to "PHASE" by pressing CH (▲/▼) buttons.
2 Press VOL (◀ / ▶) buttons to adjust the phase to get a clearer picture.

Wall/Arm Mounting

Attaching a Wall or Arm mounting device

This TV supports the VESA mounting standard and willaccommodate various VESA mounting devices.
To install any VESA mounting device, please follow the manufacturer's instructions.

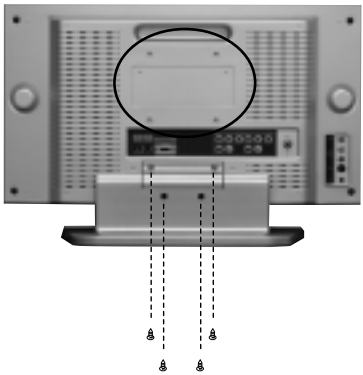

1. Remove all cables connected to the TV.
2. Lay the LCD TV face-down on a flat surface with ablanket or other soft materials to protect the screen.
3. Remove the four screws attaching the stand. Remove stand from LCD TV.
4. Remove the four screws attaching the VESA.
5. Now you are ready to install the VESA mounting device suited to your applications (see instructions below).
6. Connect all cables removed at step 1.

Installing VESA compliant mounting devices

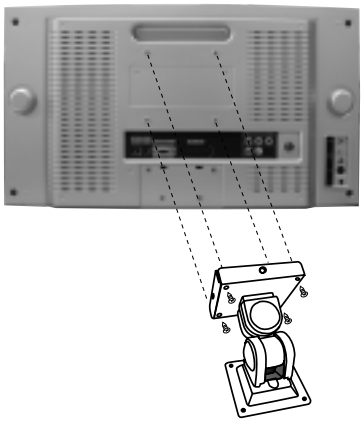

1. Align the mounting interface pad (100mm x 100mm hole spacing) with the holes in the televisions rear cover mounting pad.
2. Secure bracket with the four screws (4mmØ) that came with the VESA mounting device.

SPECIFICATION

MODEL NUMBER	DLN-15D3SHS	DLN-17D3SHS	DLN-20D3AHS
POWER REQUIREMENT	AC 100V-240V~, 50/60Hz		
POWER CONSUMPTION	34W	40W	50W
APPEARANCE(mm)	463x345x215	544x358x215	608x456x215
WEIGHT	6Kg	7Kg	11Kg
SCREEN SIZE	381mm	434.38mm	510.54mm
ASPECT RATIO	4:3	16:9	4:3
NUMBER OF PIXELS	1024x768	1280x768	800x600
DISPLAY COLOR	16.2M	16.2M 8bit	16.7M 8bit
PIXEL PITCH	0.3(H)x0.3(V)	0.29(H)x0.29(V)	0.51(H)x0.51(V)

♥ Owing to out policy of continuous improvement, specifications may change.