NORTHROP GRUMMAN

TITLE

Park Air T6-AV100 VHF 100 W Power Amplifier User Documentation

PRODUCT CODE

T6-D-USER-AV100-EN

Product Code:	T6-D-USER-AV100-EN
Part Number:	31-3T6AV1EN
Version	1.0
Date of Issue:	May 2020
Published By:	Northrop Grumman Park Air Systems Ltd Northfields Market Deeping Peterborough PE6 8UE UK
Telephone:	From UK, 01778 345434 From outside UK, +44 1778 345434
Email	sales@parkairsystems.com
Web site:	www.parkairsystems.com

© Park Air Systems Ltd 2020

All rights reserved. No part of this publication may be reproduced or transmitted in any form or by any means, electronic, mechanical, photocopying, recording or otherwise without the prior permission of the publisher.

This information and intellectual property contained herein is confidential between Northrop Grumman and the client and remains the exclusive property of Northrop Grumman. Northrop Grumman does not warrant that this document is error free.

Foreword

This user documentation gives the necessary information for a user to install and understand the operation of the Park Air T6 VHF Power Amplifier used in series with either Park Air T6 VHF Transmitter or Park Air T6 VHF Transceiver supplied by Northrop Grumman.

Copyright and trademarks

This documentation could contain information provided by other equipment manufacturers. It is acknowledged that the copyright of any third party information is retained by the respective holder. Similarly, any trademarks and protected names or symbols contained in this documentation, or associated documentation, belong to their respective holder.

Restrictions on use

European States with restrictions on use	
EU / EFTA member states intended for use	All countries
Member states with restrictive use	None

© Park Air Systems Limited 2020

Health and safety

Disposal

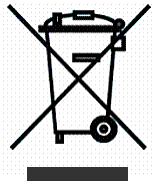

This equipment is covered by the European Directive 2012/19/EU.

Items must not be disposed of in domestic waste.

Disposal must be made using designated collection facilities appointed by the government or the local authorities in your area.

Directive 2011/65/EU including amendment 2015/863 (RoHS).

Warnings

A warning is used to show possible danger to personnel. In this documentation, warnings are shown by the following symbols:

	Shows electrical danger to personnel
	Shows a specified danger to personnel
	Shows a non-ionizing radiation hazard

Cautions

A caution is used to show possible danger to the equipment. In this documentation, cautions are shown by the following symbols:

	Shows the presence of electrostatic sensitive devices (ESDs)
	Shows a specified danger to the equipment

© Park Air Systems Limited 2020

Dangerous voltage

You must be suitably qualified to terminate a mains supply to the equipment.

Dangerous voltage

You must be careful of high RF voltages on the ANTENNA connector on the rear of the amplifier. This is indicated by the RF voltage warning symbol (ϟ).

Antenna radiation

The transmit antenna must be installed such that the resultant radiated field strength is below national limits, see Annex for limits and examples. The safe distance must be calculated for each installation.

Fan replacement

Fan replacement must be done by a skilled person.

No user serviceable parts inside the amplifier

There are no user serviceable parts inside the amplifier.

Double pole/neutral fusing

The amplifier uses a power supply which has both live *and* neutral fuses.

AC socket-outlet

The AC socket-outlet must be installed near the amplifier and must have easy access.

Earth connection

This equipment must be earthed. The earth terminal of the AC connector must be used as the safety earth.

AC and/or DC supply

The power cables are the amplifiers disconnect devices.

AC supply fuse rating

The amplifier AC supplies must have a 6.3 Amp time-delay fuse fitted.

© Park Air Systems Limited 2020

Unauthorized modifications

Changes or modifications made to equipment without the approval of Northrop Grumman, or parties authorized by Northrop Grumman, could invalidate the user's authority to operate the equipment.

ESDs

Modern electronic equipment contains Electrostatic Sensitive Devices (ESDs). Use necessary precautions to prevent damage to such devices.

© Park Air Systems Limited 2020

CE type approval

NORTHROP GRUMMAN

Declaration of conformity

Company information	Park Air Systems Limited (a wholly owned subsidiary of Northrop Grumman Corporation) Northfields, Market Deeping, Peterborough, PE6 8UE +44 1778 345 434
Product, model (part number) and description	PARK AIR T6 VHF 100 W POWER AMPLIFIER T6-AV100 (24-31631041/1) Amplifier for use with a ground to air T6 Transmitter or Transceiver in the VHF aeronautical band
Standards	EN62368-1 (2014) EN301 489-1 (V2.2.2 2019-09) / EN301 489-22 (V1.3.1 2003-11) EN300 676-1 (V1.5.2 2011-03) / EN300 676-2 (V2.1.1 2015-12) EN50385 (2017) EN50581 (2012)
Notified body	TÜV SÜD DANMARK ApS Strandvejen 125, 2900 Hellerup, Denmark EU-type examination certificate DK-RED001656 i01

This declaration of conformity is issued under the sole responsibility of the manufacturer. The product has been tested to the listed standards and is confirmed as being in compliance with the essential requirements and provisions of Directive 2014/53/EU (RED), Directive 2012/19/EU (WEEE) and Directive 2015/863 (RoHS3).

The technical documentation relevant to the product will be held at Park Air Systems Limited for not less than ten years after the last product has been manufactured.

Neil Upton
Technical Director, Park Air Systems Limited

Documentation number: DOC-T6-014
Issue 1.0

Declaration of conformity
18 May 2020

© Park Air Systems Limited 2020

Park Air Sapphire

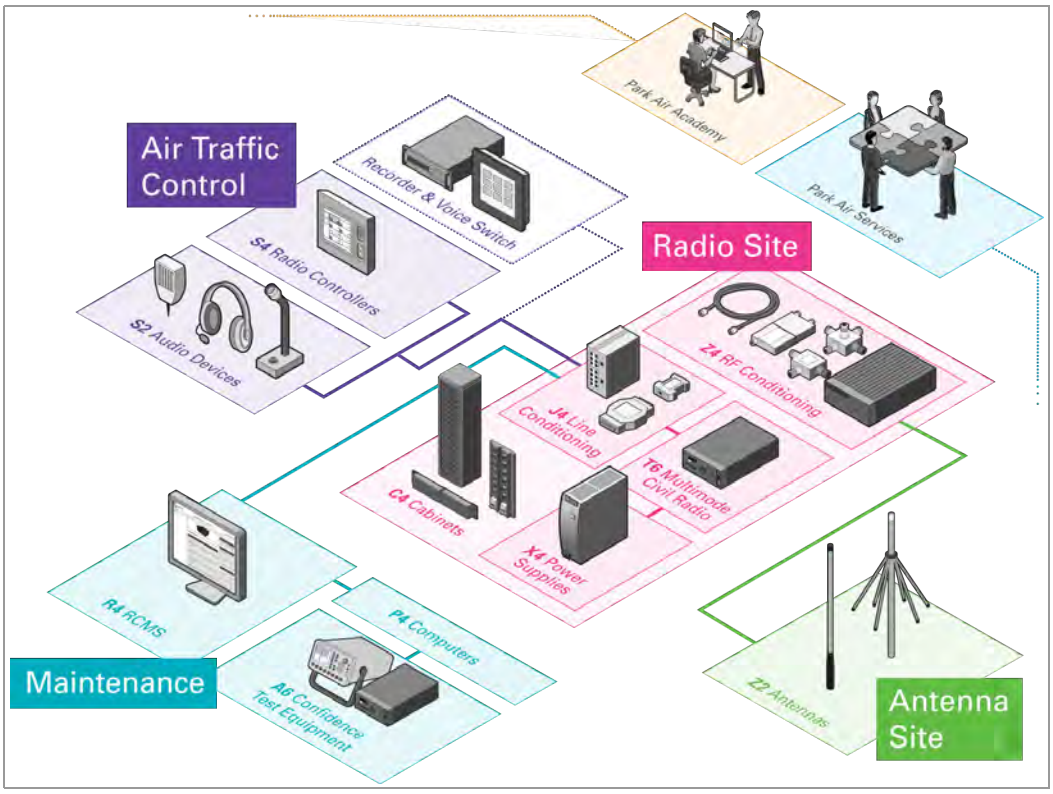

The Sapphire concept builds on over 50 years of Park Air innovation, delivering a truly integrated approach to providing ground-to-air solutions.

The aim of Sapphire is to optimise the customer's experience. The result is a coherent and unified collection of system components, backed up by a tailored suite of support services.

From radios, controllers and filters to headsets and antennas, the Sapphire portfolio includes everything required for ATC communication systems. Just as importantly, the Sapphire components are designed to integrate perfectly for stress-free implementation and operation.

The name Park Air has been synonymous with ATC communications since 1966 and has always been a name you can trust. Now Sapphire represents the pinnacle of Park Air expertise, innovation and industry knowledge.

At the heart of Sapphire is the latest evolution of the world's leading ground-to-air radio platform, the Park Air T6. Packed with the latest technology, the T6 Radios offer outstanding performance for VHF and UHF coverage.

© Park Air Systems Limited 2020

Park Air V2 Services

Use email or telephone to contact V2 Park Air Services. For help with configuration, installation or maintenance of equipment, use any of the contact methods listed below.

Email: support@uk.parkairsystems.com

Telephone (24 hours): Within the UK, 01778 381557
International, +44 1778 381557

Mail: Customer Services Department
Northrop Grumman
Park Air Systems Ltd
Northfields
Market Deeping
Peterborough PE6 8UE
UK

Web Site: www.parkairsystems.com/contact

© Park Air Systems Limited 2020

About this user documentation

This user documentation has nine sections:

- ❑ Section 1. Overview
- ❑ Section 2. Description - the human machine interface and detailed connectivity
- ❑ Section 3. Installation - as standalone, in the Park Air C4 Cabinet and any 19" cabinet
- ❑ Section 4. Amplifier/radio interaction - how to use the Park Air T6-AV100 VHF 100 W Power Amplifier.
- ❑ Section 5. Maintenance - routine and interruptive tasks including part replacement
- ❑ Section 6. Connector information - interface types and specification
- ❑ Section 7. Specification
- ❑ Section 8. Associated equipment
- ❑ Section 9. Fault finding
- ❑ Annex - antenna radiation information.

A cross-reference to a section is shown as the section or sub-section number and the title. An example is, 4.2.2 Settings for amplifier RF power output.

A cross-reference to a page is shown as the page number. An example is, page 4-1.

A glossary of terms can be found in Glossary of abbreviations, acronyms and technical terms on page xi. To help the reader, the first time a term is used in the book, it is italicised and emboldened. An example is, ***main/standby***.

A table of associated equipment from the Park Air Sapphire range can be found in Associated equipment. To help the reader, the first time any associated equipment is mentioned in the book, it is italicized. An example is *Park Air C4 Cabinet*.

The electronic (PDF) version of this documentation has text-links to help the reader navigate topics as shown in the examples:

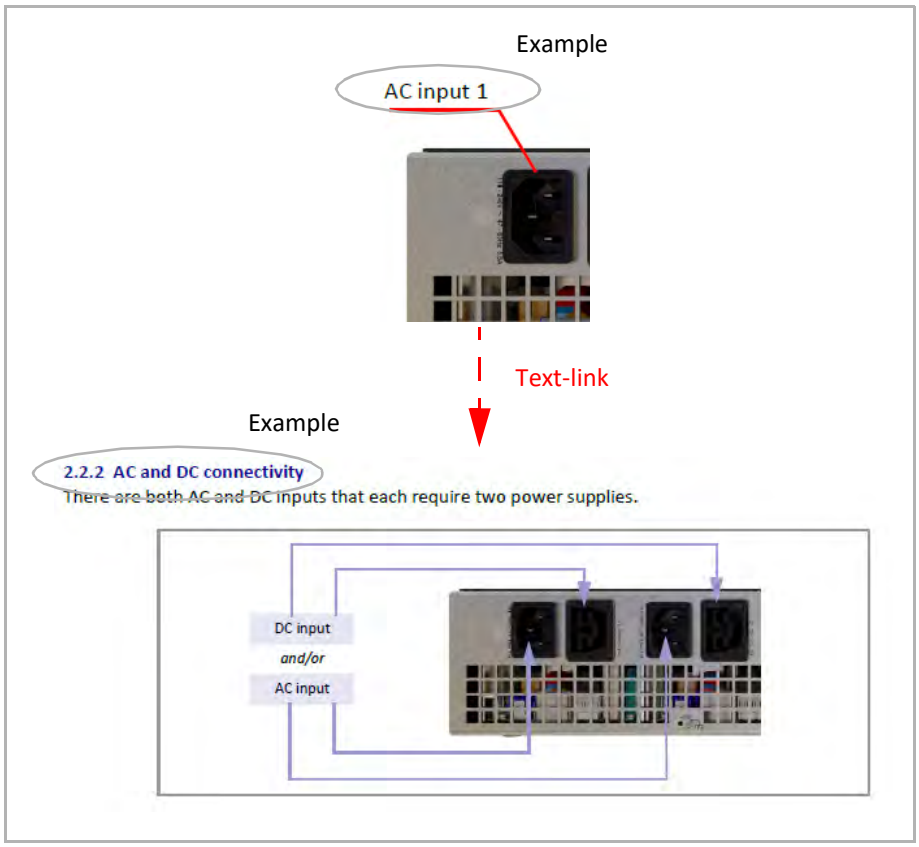

© Park Air Systems Limited 2020

Glossary of abbreviations, acronyms and technical terms

A	Ampere
AC	alternating current
AM	amplitude modulation
ATC	air traffic control
AWG	American Wire Gauge (U.S. standard set of non-ferrous wire conductor sizes)
BIT	built-in-test
CE	Conformité Européenne (European health & safety product certification)
CSA	Canadian Standards Association (provides product certification and product testing services for Canada)
dB	decibel
dBi	dB relative to an isotropic antenna
DC	direct current
EMC	Electromagnetic Compatibility Directive
ESD	electrostatic sensitive device
EU	European Union
FCC	Federal Communication Commission (regulates radio communications within the United States of America and its territories)
Hz	Hertz
IEC	International Electrotechnical Commission
kg	kilogram
LED	light emitting diode
m	metre
Main/standby	The radio is operationally main or standby (analogue radio control terminology)
MARC	multi access remote control
N/C	normally closed (contact terminal status)
N/O	normally open (contact terminal status)
Ohm	unit of resistance
OLED	organic light emitting diode
PTT	press-to-transmit or push-to-talk
RF	radio frequency
RJ45	8 position 8 contact (8P8C) connector
RoHS	Restriction of Hazardous Substances Directive
V	Volt
VA	Volt-Ampere (apparent power)
VHF	very high frequency
VSWR	voltage standing wave ratio
UHF	ultra high frequency
UL	Underwriters Laboratories (global safety certification)
W	Watt
4-wire E & M	Analogue transmit and receive audio with squelch and PTT signalling

© Park Air Systems Limited 2020

Intentionally blank

© Park Air Systems Limited 2020

Foreword iii
Copyright and trademarks iii
Restrictions on use iii
Health and safety iv
Disposal iv
Warnings iv
Cautions iv
CE type approval vii
Park Air Sapphire viii
Park Air V2 Services ix
About this user documentation x
Glossary of abbreviations, acronyms and technical terms xi
1 Overview 1-1
1.1 Introduction 1-1
1.1.1 Standalone operation 1-1
1.1.2 Park Air C4 Cabinet installation 1-2
1.2 Park Air T6-AV100 VHF 100 W Power Amplifier 1-3
1.2.1 T6 VHF Amplifier product code 1-3
1.2.2 T6 VHF Amplifier accessories 1-3
1.2.3 T6 VHF Amplifier documentation 1-3
1.2.4 T6 VHF Amplifier spares 1-3
1.3 Features 1-3
1.3.1 Built-in-test 1-3
1.3.2 Internal RF bypass 1-3
2 Description 2-1
2.1 Front panel interfaces 2-1
2.1.1 On/off switch 2-1
2.1.2 Power supply indicator 2-1
2.1.3 Fault indicator display 2-2
2.1.4 Busy indicator 2-2
2.1.5 Status indicator 2-2
2.2 Rear panel connectors and symbols 2-3
2.2.1 Radio connectivity 2-4
2.2.2 AC and DC connectivity 2-4
2.2.3 Antenna connectivity 2-4
2.3 Antenna configurations 2-5
2.3.1 Standalone radio configuration 2-5
2.3.2 Main/standby configurations 2-6
2.4 Labels 2-9
2.4.1 Product label 2-9
2.4.2 Serial number label 2-9
3 Installation 3-1
3.1 Standalone installation 3-2
3.1.1 Connect the cables 3-2
3.1.2 Switch on the amplifier 3-2
3.2 Park Air C4 Cabinet installation 3-3
3.2.1 Tool-free installation 3-3
3.2.2 Connect the cables 3-4
3.2.3 Amplifier removal 3-4
3.3 Installation in 19” cabinet 3-5
3.3.1 19” cabinet accessories 3-5
3.3.2 Mounting adaptor installation 3-5
4 Amplifier/radio interaction 4-1
4.1 Turn the amplifier on 4-1
4.2 Turn the radio on 4-1

© Park Air Systems Limited 2020

4.2.1 Home screen 4-1
4.2.2 Settings for amplifier RF power output 4-2
4.2.3 Status 4-4
5 Maintenance 5-1
5.1 Fan replacement 5-1
6 Connector information 6-1
6.1 Rear panel connectors 6-1
7 Specification 7-1
7.1 Park Air T6 VHF 100 W Power Amplifier specifications 7-1
7.2 Park Air T6 VHF 100 W Power Amplifier features and benefits 7-1
8 Associated equipment 8-1
8.1 Table of associated equipment 8-1
9 Fault finding 9-1
Annex Annex-1
Antenna radiation limits - health and safety Annex-1
Countries within the European Union Annex-1
Canada Annex-3
United States of America Annex-4

© Park Air Systems Limited 2020

1 Overview

1.1 Introduction

The Park Air T6-AV100 VHF 100 W Power Amplifier enhances the capabilities of *Park Air T6-TV VHF 50 W Transmitters* and *Park Air T6-TRV VHF 50 W Transceivers*[1] for the most challenging of RF environments. The T6 Amplifier is placed in series with a standard T6 Transmitter or Transceiver and provides amplification of the RF output up to 100 W. The amplifier provides class-leading RF performance whilst integrated into a small light package.

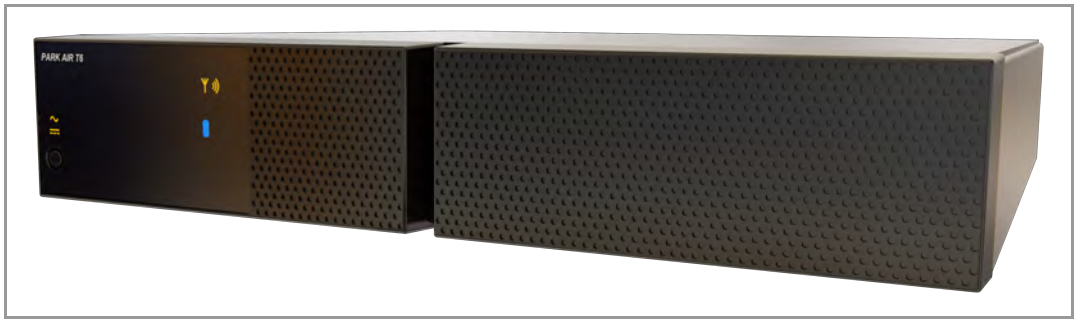

The T6 VHF 100 W Power Amplifier features:

- Class-leading RF co-location performance
- Intelligent built-in-test to monitor its own performance and allow RF pass through to safeguard communications
- Extended service interval and service lifetime
- Tool-free installation into the *Park Air C4 Cabinet*
- No materials specified in the Restriction of Hazardous Substances Directive

The T6 VHF 100 W Power Amplifier accessories:

- Mounting adaptor for 19” cabinets.

Associated accessories are shown in 8.1 Table of associated equipment

1.1.1 Standalone operation

The T6 VHF Amplifier can compliment standalone T6 Transmitters or Transceivers with the addition of a suitable AC and/or DC supply, an antenna and a *Park Air S2 Hand Microphone* or *Park Air S2 Headset*.

Installation details are shown in 3.1 Standalone installation.

1. The T6 50 W Transmitters/Transceivers must be operating a firmware version of 65-00000841/10.8.0 or later.

© Park Air Systems Limited 2020

1.1.2 Park Air C4 Cabinet installation

The T6 Radios, T6 Amplifiers and *Park Air Z4 Filters* are specifically designed to fit the C4 Cabinet. The T6 Amplifier requires a 2U 19" partition. The C4 Cabinet can accommodate various combinations of T6 Radios, T6 Amplifiers and Z4 Filters.

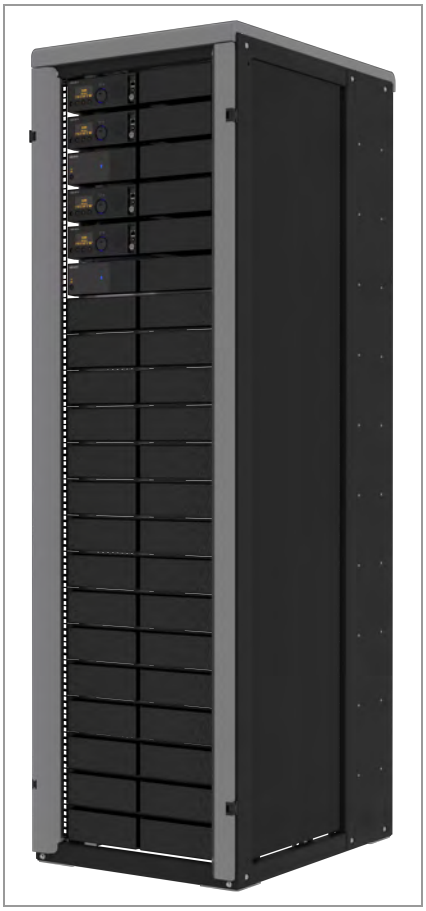

The C4 family of cabinets has the following capacity options:

- 22U, 32U or 42U capacity.

Typical T6 Radio and T6 Amplifier installation (rear):

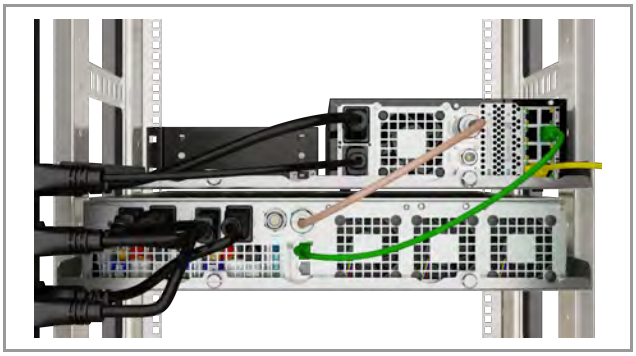

Installation details are shown in 3.2 Park Air C4 Cabinet installation.

© Park Air Systems Limited 2020

1.2 Park Air T6-AV100 VHF 100 W Power Amplifier

The product codes and product names of the amplifier, accessories and documentation for the T6 VHF Amplifier.

1.2.1 T6 VHF Amplifier product code

Product code	Product name	Notes
T6-AV100	T6 VHF 100 W Power Amplifier	

1.2.2 T6 VHF Amplifier accessories

Product code	Product name	Notes
T6-A-CMA2	19” cabinet mounting adaptor for one amplifier	See 3.3 Installation in 19” cabinet

1.2.3 T6 VHF Amplifier documentation

Product code	Product name	Notes
T6-D-USER-AV100-EN	User documentation for T6-AV100 in English	
T6-D-USER-AV100-FR	User documentation for T6-AV100 in French	
T6-D-USER-AV100-ES	User documentation for T6-AV100 in Spanish	

1.2.4 T6 VHF Amplifier spares

Product code	Product name	Notes
69A12006025	Cooling fan	See 5.1 Fan replacement

1.3 Features

1.3.1 Built-in-test

The T6 Amplifier continually monitors its own environment and performance. Fault detection alerts the radio to enter a ‘Reduced Service’ state, decreasing the power output and alerting the operator with diagnostic information before loss of service occurs. See 7.2 Park Air T6 VHF 100 W Power Amplifier features and benefits.

1.3.2 Internal RF bypass

On failure the T6 Amplifier automatically switches into bypass mode. This allows transmission to continue at a reduced power, see 7.2 Park Air T6 VHF 100 W Power Amplifier features and benefits.

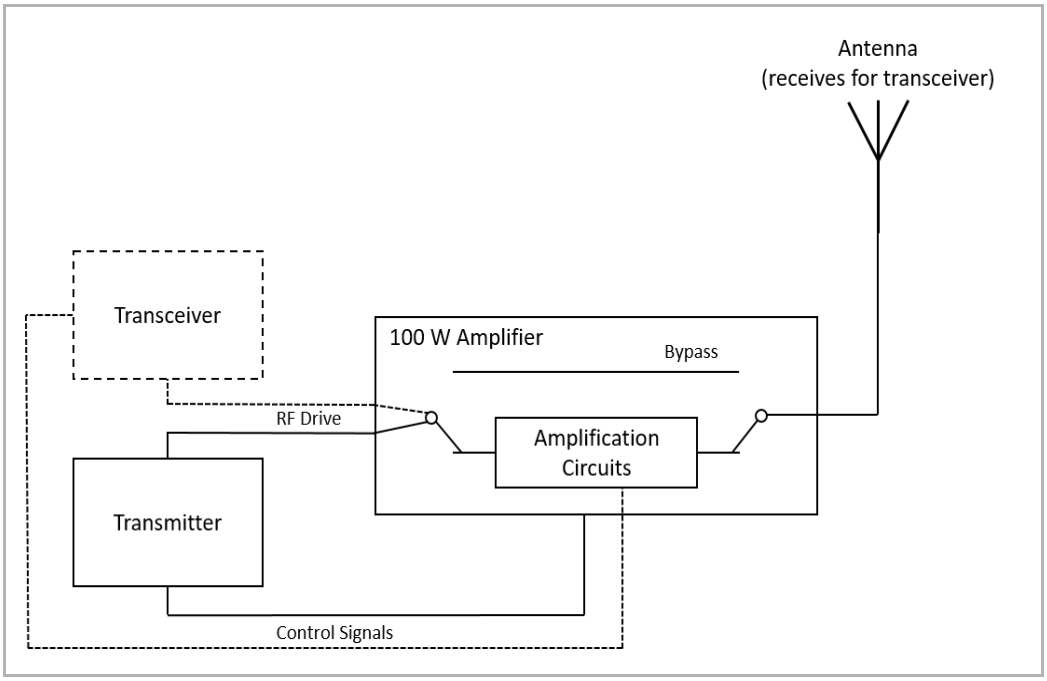

© Park Air Systems Limited 2020

Intentionally blank

© Park Air Systems Limited 2020

2 Description

The T6 VHF Amplifier interfaces are shown in this section.

2.1 Front panel interfaces

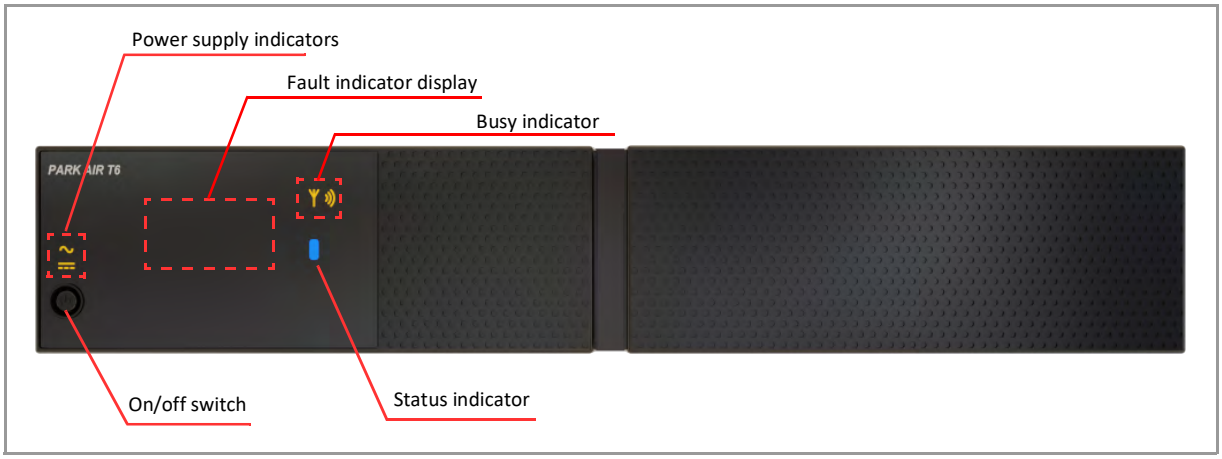

Control		Notes
On/off switch	Front panel on/off of the amplifier	See 2.1.1 On/off switch
Power supply indicator	Connected power source types	See 2.1.2 Power supply indicator
Fault indicator display	Fault code icons	See 2.1.3 Fault indicator display
Busy indicator	Transmitting when illuminated	See 2.1.4 Busy indicator
Status indicator	Ready or reduced service status	See 2.1.5 Status indicator

2.1.1 On/off switch

Control		Notes
⏻	On/off switch	The power cables are the power disconnect devices.

Note:

This action symbol is used in the document.

2.1.2 Power supply indicator

Power supply indicator	Function	Notes
∿	AC power supply connected	The AC indicator illuminates amber The amplifier requires two separate AC power supplies
⎓	DC power supply connected	The DC indicator illuminates amber The amplifier requires two separate DC power supplies

Note:

These action symbols are used in the document.

© Park Air Systems Limited 2020

2.1.3 Fault indicator display

Fault code indicator	Fault	Notes
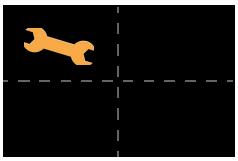	Internal fault detected	The spanner indicator illuminates amber
	High VSWR detected	The antenna indicator illuminates amber
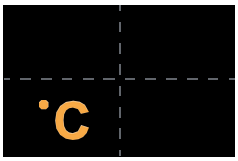	Over-temperature detected	The temperature indicator illuminates amber
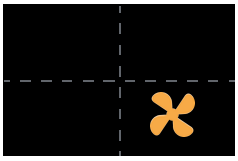	Fan failure detected	The fan indicator illuminates amber

Note:

These action symbols are used in the document.

2.1.4 Busy indicator

Busy indicator	Function	Notes
	The amplifier transmits	The busy indicator illuminates amber

2.1.5 Status indicator

The status indicator illuminates blue or red.

Status indicator	Action	Notes
	Illuminates blue	BIT status is Full Service
	Illuminates red	BIT status is bypass mode or Reduced Service

Note:

These action symbols are used in the document.

© Park Air Systems Limited 2020

2.2 Rear panel connectors and symbols

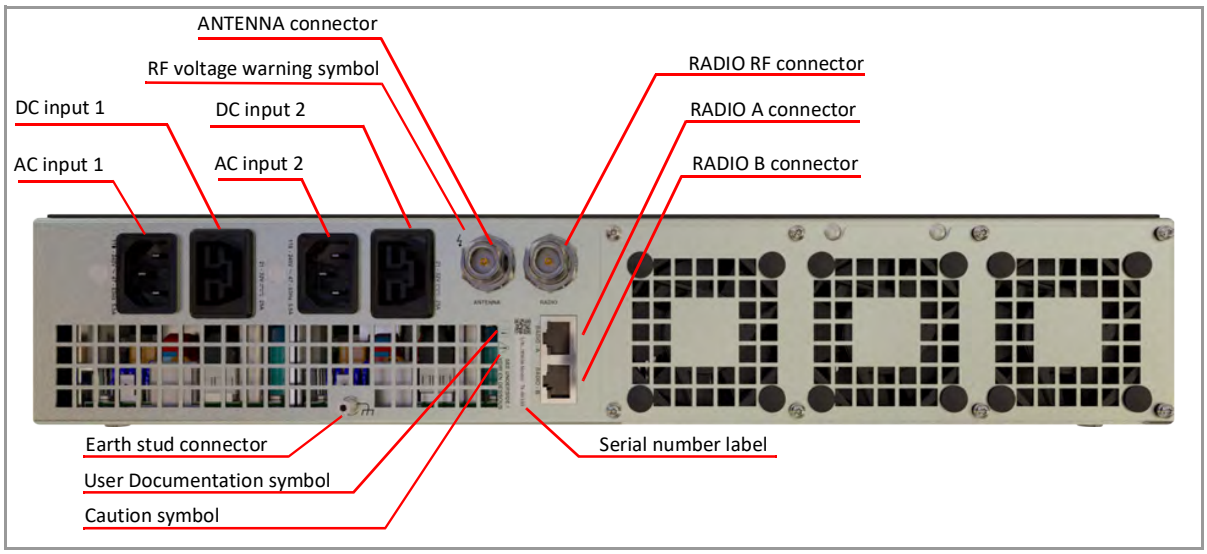

The symbols on the rear of the amplifier are described in the table below.

Symbol	Symbol name	Notes
↯	RF voltage warning symbol	You must be careful of high RF voltages on the ANTENNA connector on the rear of the amplifier. See 2.3 Antenna configurations.
	User Documentation symbol	See this User Documentation before use of the amplifier.
⚠	Caution symbol	Caution is required when operating the amplifier.

Each connector type is shown in the table below and associated connection cable colour codes.

Connector	Connector type	Cable	Notes
DC input 1 & 2	Saf-D-Grid chassis plug		See DC input connector on page 6-2
AC input 1 & 2	IEC-C16 chassis plug		See AC input connector on page 6-2
ANTENNA	N-type socket		See ANTENNA connector on page 6-3
RADIO	N-type socket		See Radio connector on page 6-3
Earth stud connector	M5 thread		See Earth stud connector on page 6-2
RADIO A	RJ45 socket	Green	See AMP (amplifier) connector on page 6-1
RADIO B	RJ45 socket	Green	See AMP (amplifier) connector on page 6-1
FAC	RJ45 socket	Yellow	

© Park Air Systems Limited 2020

2.2.1 Radio connectivity

Connectivity from the radio to the amplifier is made using a RJ45 connection from the radio's AMP connector to the amplifier RADIO A or RADIO B connector.

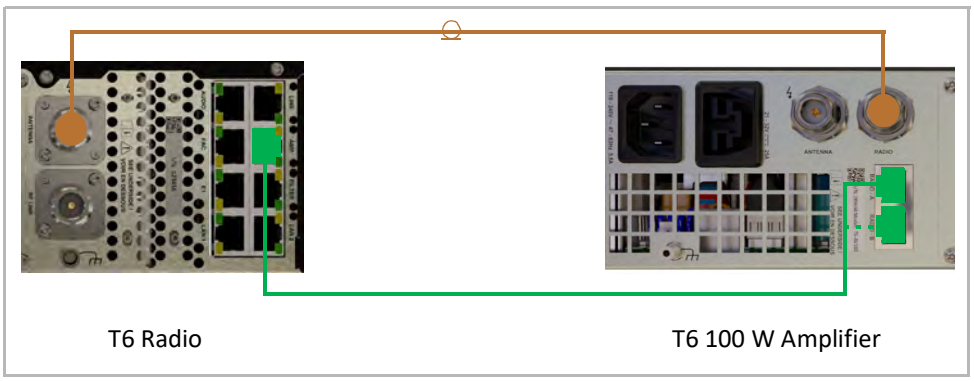

2.2.2 AC and DC connectivity

There are both AC and DC inputs that each require two power supplies.

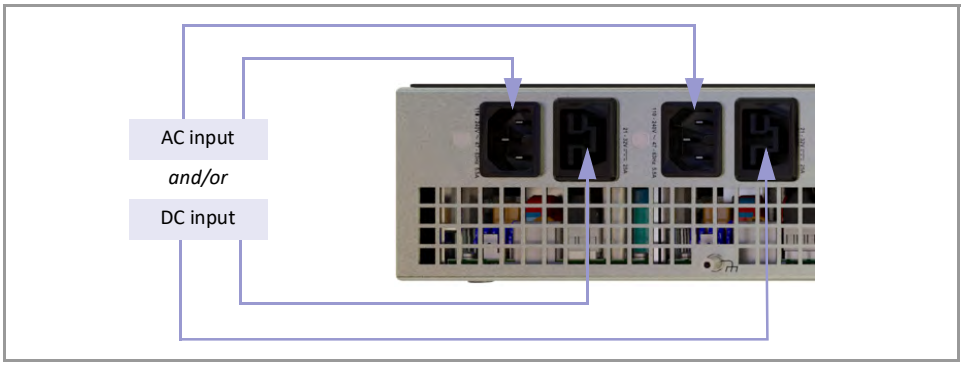

2.2.3 Antenna connectivity

There are a number of standalone radio and *main/standby* antenna configurations that may include the T6 Amplifier. More information on antenna configurations can be found in 2.3 Antenna configurations.

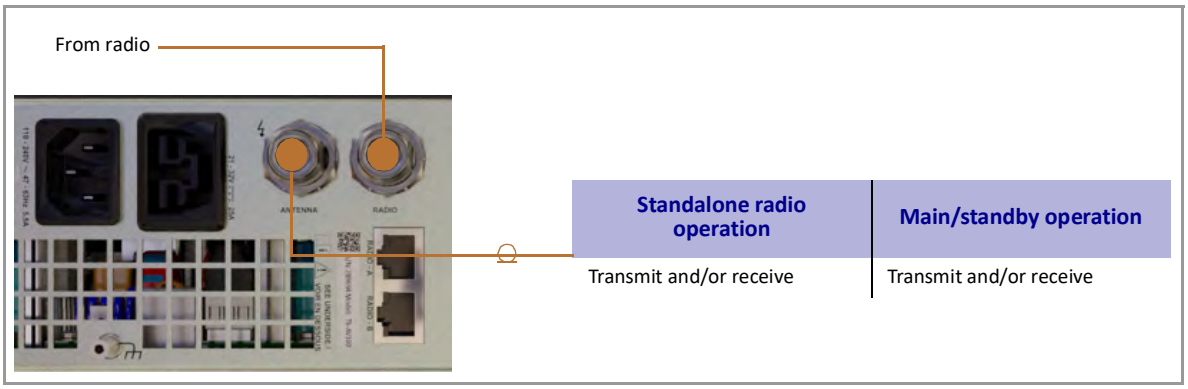

More information on all the connectors is shown in 6 Connector information.

© Park Air Systems Limited 2020

2.3 Antenna configurations

Dangerous voltage

You must be careful of high RF voltages on the ANTENNA connector on the rear of the radio and amplifier. This is indicated by the RF voltage warning symbol (ϟ).

RF switch control signal

Only enable the RF switch control setting on a radio that is connected directly to either another Park Air T6 Radio's internal relay or a Park Air Z4 Solid State Changeover Relay when DC control is required. The DC signal used for switching these relays can cause other equipment to not function correctly and reduce system performance.

2.3.1 Standalone radio configuration

Single transmit or transmit/receive antenna:

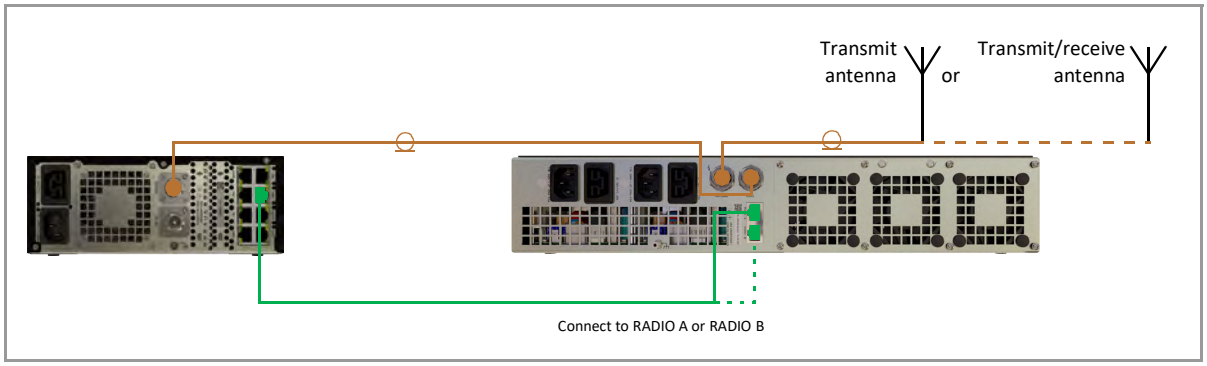

Transmit and receive antennas:

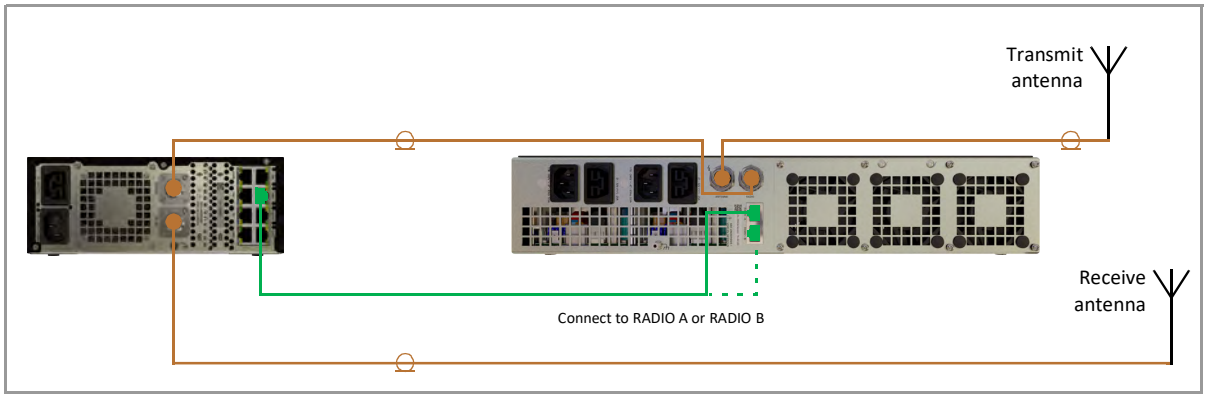

© Park Air Systems Limited 2020

2.3.2 Main/standby configurations

Transmit or transmit/receive antenna with RF link:

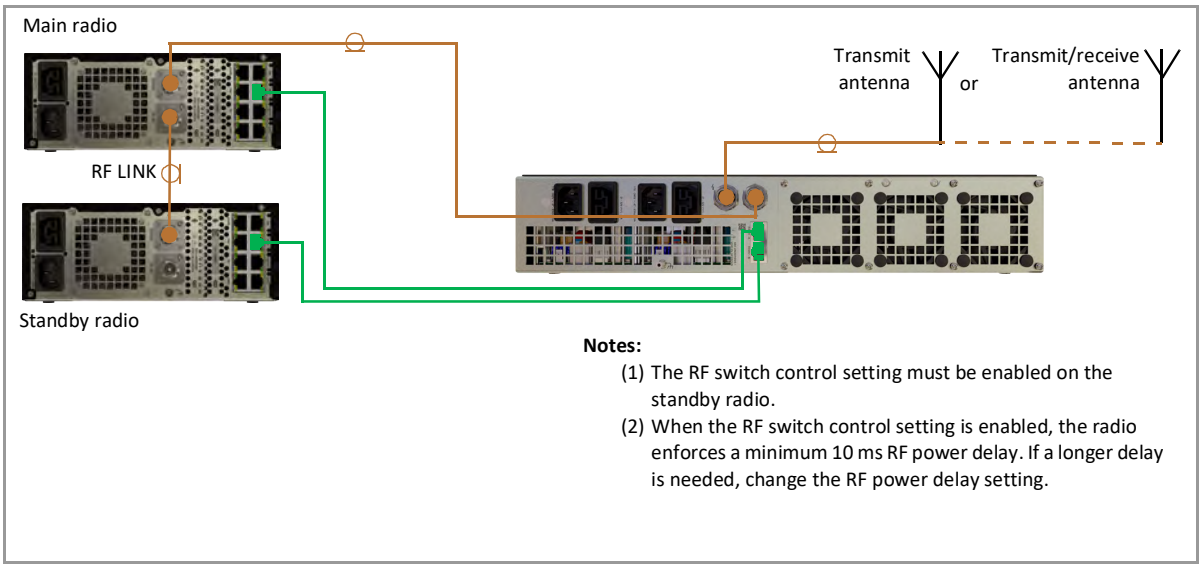

Transmit or transmit/receive antenna with a *Park Air Z4 Solid State Changeover Relay* (which is referred to in this section as a solid state relay):

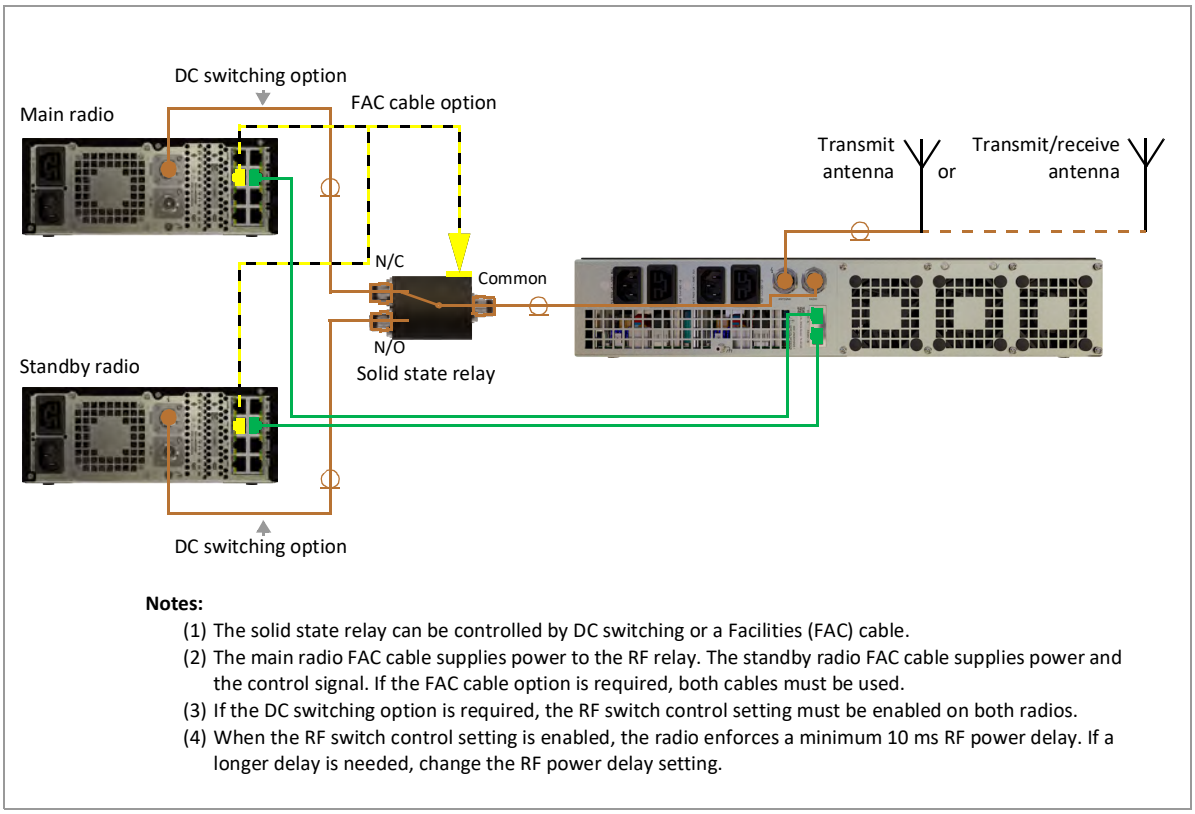

© Park Air Systems Limited 2020

Transmit and receive antennas with a solid state relay and a *Park Air Z4 3dB Receiver Splitter* (which is referred to in this section as a receiver splitter):

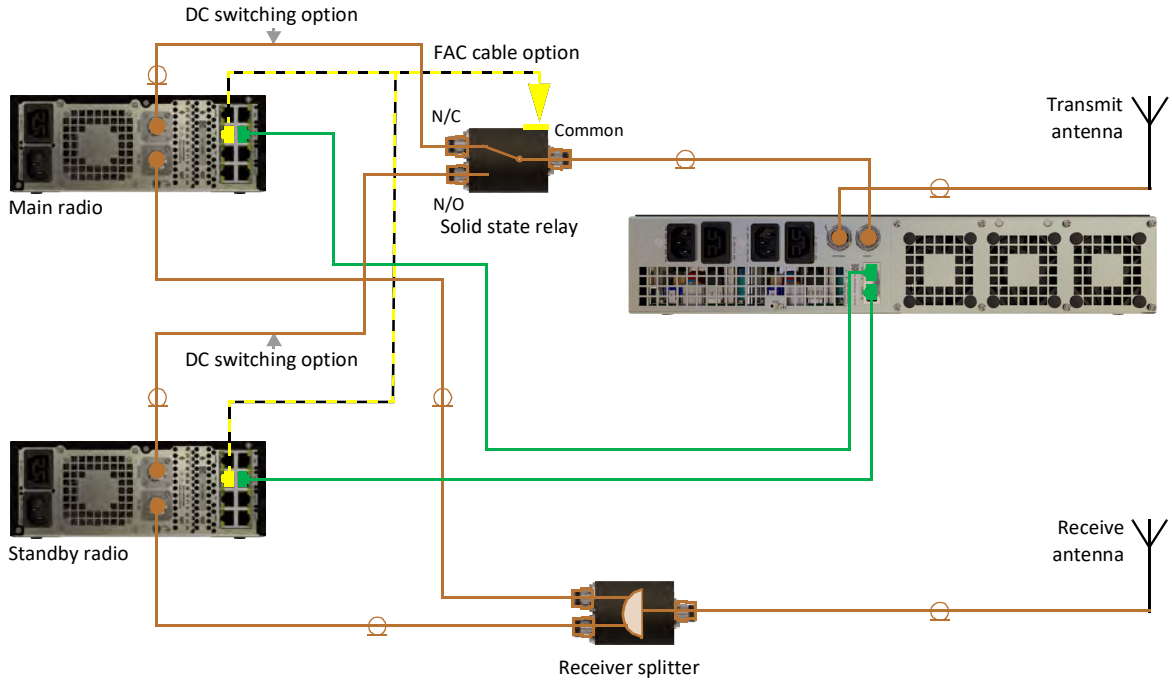

Notes:

(1) The solid state relay can be controlled by DC switching or a Facilities (FAC) cable.
(2) The main radio FAC cable supplies power to the RF relay. The standby radio FAC cable supplies power and the control signal. If the FAC cable option is required, both cables must be used.
(3) If the DC switching option is required, the RF switch control setting must be enabled on both radios.
(4) When the RF switch control setting is enabled, the radio enforces a minimum 10 ms RF power delay. If a longer delay is needed, change the RF power delay setting.
(5) Where a radio uses its RF LINK connector as a separate receive input, the *separate antenna* option must be enabled.

© Park Air Systems Limited 2020

Transmit and receive antennas with solid state relays:

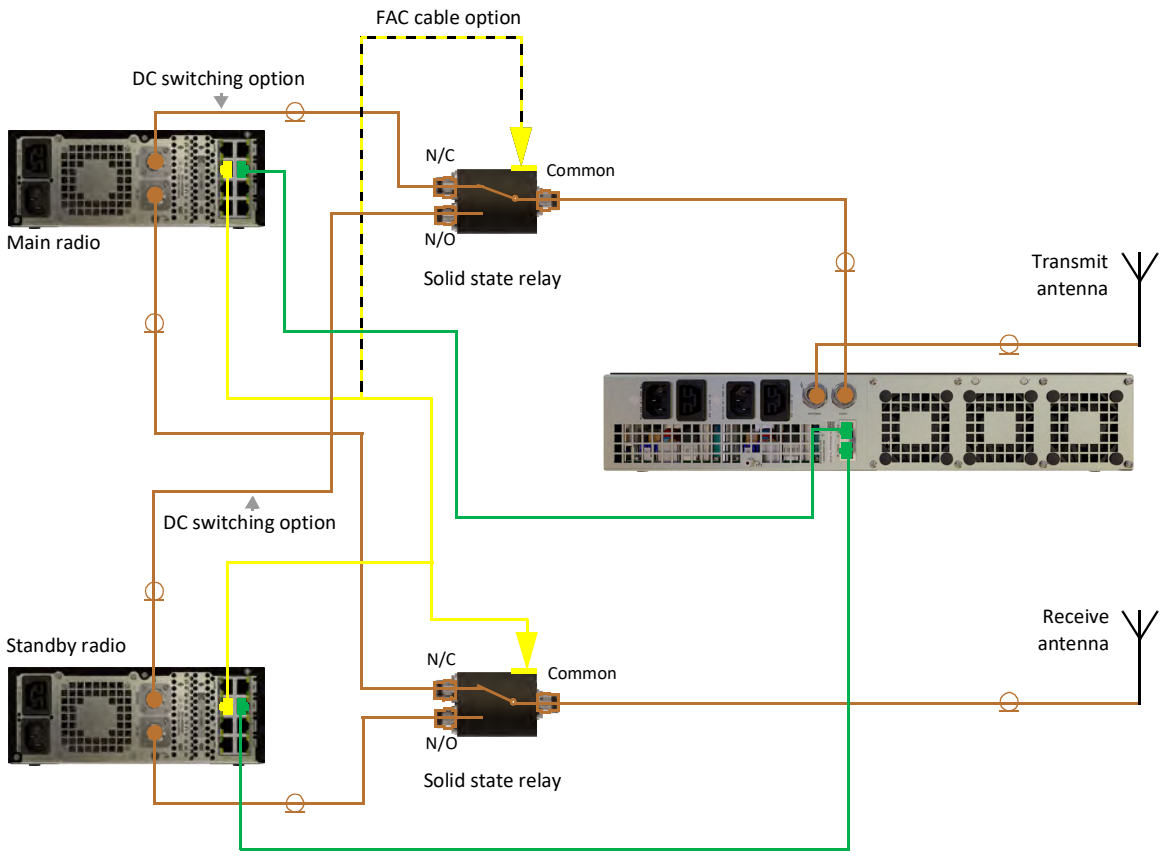

Notes:

(1) The solid state relay can be controlled by DC switching or a Facilities (FAC) cable.
(2) The receive solid state relay must be controlled by a Facilities (FAC) cable.
(3) The main radio FAC cable supplies power to the RF relay. The standby radio FAC cable supplies power and the control signal. If the FAC cable option is required, both cables must be used.
(4) If the DC switching option is required for the transmit solid state relay, the RF switch control setting must be enabled on both radios.
(5) When the RF switch control setting is enabled, the radio enforces a minimum 10 ms RF power delay. If a longer delay is needed, change the RF power delay setting.

© Park Air Systems Limited 2020

2.4 Labels

2.4.1 Product label

The product label is on the bottom of the amplifier.

2.4.2 Serial number label

A serial number label is on the rear of the amplifier.

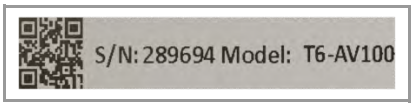

© Park Air Systems Limited 2020

Intentionally blank

© Park Air Systems Limited 2020

3 Installation

Dangerous voltage

You must be suitably qualified to terminate a mains supply to the equipment.

Dangerous voltage

You must be careful of high RF voltages on the ANTENNA connector on the rear of the amplifier. This is indicated by the RF voltage warning symbol (ϟ).

Antenna radiation

The transmit antenna must be installed such that the resultant radiated field strength is below national limits, see Annex for limits and examples. The safe distance must be calculated for each installation.

Earth connection

This equipment must be earthed. The earth terminal of the AC connector must be used as the safety earth.

AC and/or DC supply

The power cables are the amplifier's disconnect devices.

AC supply fuse rating

The amplifier AC supplies must have a 6.3 Amp time-delay fuse fitted.

© Park Air Systems Limited 2020

3.1 Standalone installation

AC socket-outlet

The AC socket-outlet must be installed near the amplifier and must have easy access.

For T6 VHF Transmitter and Transceiver installation instructions, see the relevant product user guide.

The T6 VHF Amplifier must have two suitable AC and/or DC supplies and a suitable antenna.

The AC supply cable specification is shown with AC input connector on page 6-2 and the DC supply cable specification is shown with DC input connector on page 6-2.

3.1.1 Connect the cables

(1) Make sure the RF cable from the radio to the amplifier is correctly connected.

(2) Make sure the antenna cable is correctly connected.

(3) Make sure the cables from the radio's AMP connector(s) are correctly connected.

(4) Make sure the AC and/or DC supply cables are correctly connected.

3.1.2 Switch on the amplifier

Refer to 4 Amplifier/radio interaction for further details.

To make sure the amplifier is operational:

(1) Make sure the status Indicator is blue

(2) Make sure the correct power supply indicators are illuminated AC and/or DC

(3) Do an operational test in accordance with local regulations or when required by the user. An accessory microphone or handset may be required.

© Park Air Systems Limited 2020

3.2 Park Air C4 Cabinet installation

3.2.1 Tool-free installation

***Failure to comply with this instruction will result in non-compliance with the EMC Directive 2014/30/EU.**

The unit is correctly installed in the cabinet.

© Park Air Systems Limited 2020

3.2.2 Connect the cables

If the amplifier is fitted to a wired position in the cabinet, the amplifier control cables are wrapped together.

(1) Connect the RJ45 cables *as applicable,* see 2.3 Antenna configurations. The cables are colour-coded.

RJ45 cable colour		RJ45 connection
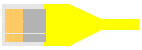	Yellow	FAC
	Green	AMP (Radio A)
	Green	AMP (Radio B)

(2) Connect the RF cable/s.

(3) Connect the AC and /or DC supply cables.

The amplifier can be powered when the cabinet installation is complete or when decided by a suitably qualified person.

3.2.3 Amplifier removal

To remove an amplifier from a C4 Cabinet:

(1) Remove the cables in the opposite order to 3.2.2 Connect the cables.

(2) Remove the amplifier from the cabinet in the opposite order to 3.2.1 Tool-free installation.

© Park Air Systems Limited 2020

3.3 Installation in 19” cabinet

To fit a T6 VHF Amplifier to a 19” cabinet, a mounting adaptor is to be used.

3.3.1 19” cabinet accessories

Product code	Product name
T6-A-CMA2	19” cabinet mounting adaptor

3.3.2 Mounting adaptor installation

To fit the mounting adaptor to a 19” cabinet:

(1) Identify the cabinet position where the amplifier is to be fitted.

(2) Use the four (4) cabinet fixing bolts provided to fit the mounting adaptor.

To fit a T6 amplifier to the mounting adaptor, see 3.2.1 Tool-free installation.

To complete the installation of the amplifier, see 3.2.2 Connect the cables.

To remove the amplifier, see 3.2.3 Amplifier removal.

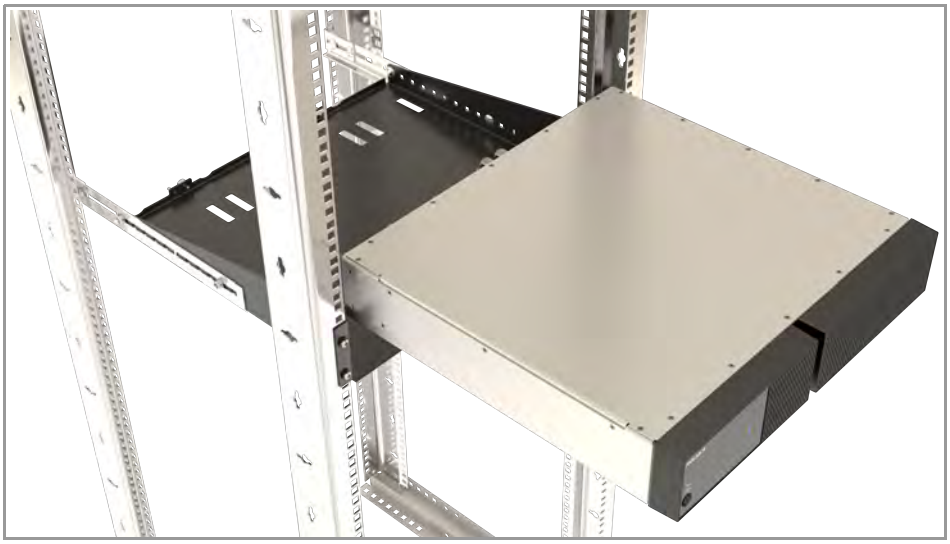

© Park Air Systems Limited 2020

Intentionally blank

© Park Air Systems Limited 2020

4 Amplifier/radio interaction

The T6 VHF Amplifier has easy to use functionality. Details of displays and indicators are shown in 2 Description.

4.1 Turn the amplifier on

(1) Make sure the radio is connected to two AC and/or DC supplies.

(2) Push . (All indicators illuminate for approximately one second).

(3) The power indicators illuminate and/or

(4) The status indicator illuminates blue

4.2 Turn the radio on

(1) Make sure the radio is connected to an AC and/or DC supply.

(2) Push

The radio then initialises.

(3) The icons illuminate

(4) The display shows:

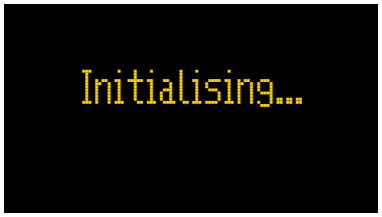

The radio then shows the home screen.

4.2.1 Home screen

An example of the home screen:

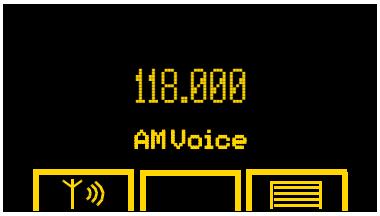

© Park Air Systems Limited 2020

4.2.2 Settings for amplifier RF power output

RF power output of the amplifier can be adjusted through *Park Air R4 MARC Server* or the radio's front panel.

To change the amplifier power settings through the radio:

(1) Select

(2) Scroll so that Settings is shown in the middle parameter field.

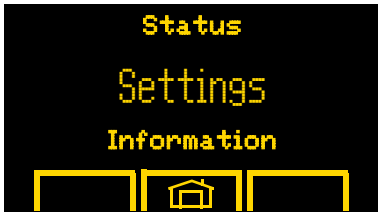

To enter the settings list:

(1) Push

The settings list screen is shown.

To change the RF power setting:

(1) Scroll so that the RF power setting is shown.

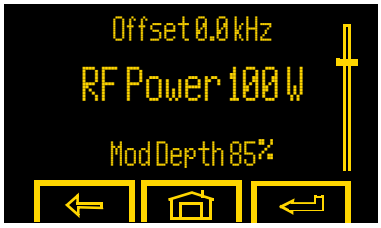

(2) Select or push

(3) Adjust the power

Note:

Power is adjusted in 2 W increments when radio and amplifier are connected.

To save the new setting:

(1) Select or push

There is a 5 second delay between a setting being saved and it being stored in the radio's memory. To go back to the menu screen:

(1) Select

© Park Air Systems Limited 2020

To go back to the home screen:

(1) Select

© Park Air Systems Limited 2020

4.2.3 Status

This is the operational status of the radio. To find Status:

(1) Select

(2) Scroll so that Status is shown in the middle parameter field.

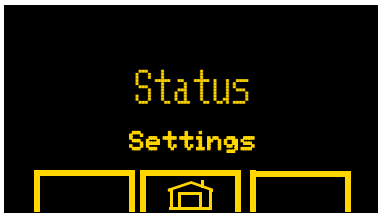

To enter the status list:

(1) Push

The status list screen is shown:

Note:

Status list screen will display “REDUCED SERVICE” if a fault is detected. See 9 Fault finding.

To select Status Messages, Monitoring or Status Reset:

(1) Scroll as necessary.

(2) Push

To go back to the menu screen:

(1) Select

To go back to the home screen:

(1) Select

© Park Air Systems Limited 2020

Intentionally blank

© Park Air Systems Limited 2020

5 Maintenance

No user serviceable parts inside the amplifier

There are no user serviceable parts inside the amplifier.

Double pole/neutral fusing

The amplifier uses a power supply which has both live *and* neutral fuses.

5.1 Fan replacement

Fan replacement

Fan replacement must be done by a skilled person.

Note:

Individual fan replacement is not recommended. In the event of a fan failure the fan/screen assembly must be replaced with genuine Park Air parts.

To replace the fans:

(1) Switch off the amplifier.

(2) Disconnect *all* cables from the amplifier.

AC and/or DC supply

The power cables are the amplifier's disconnect devices.

(3) Remove from the equipment cabinet (if applicable).

On the rear of the amplifier:

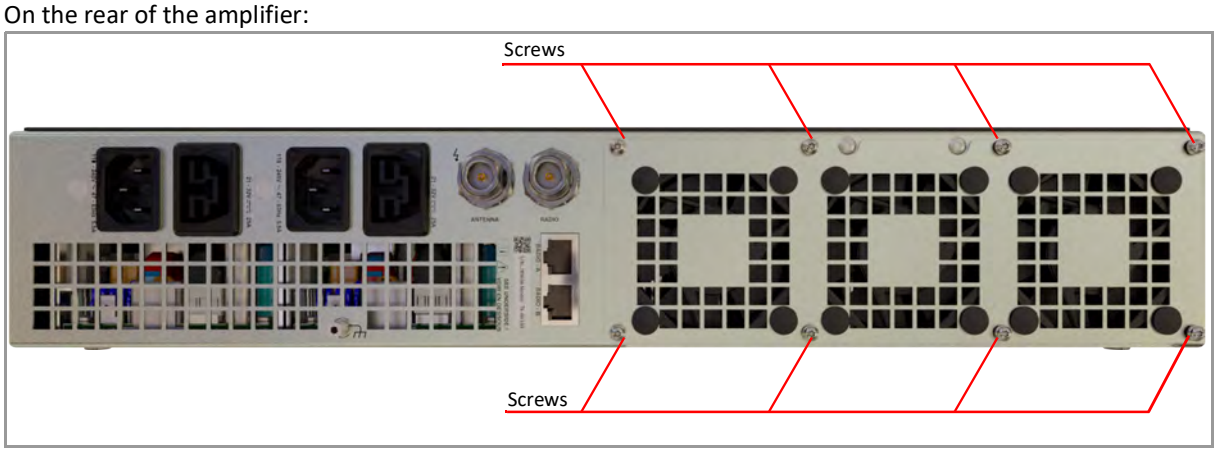

(4) With a T10 Torx® screwdriver remove the eight (8) fixing screws.

(5) Remove the fan/screen assembly from the rear of the amplifier.

(6) Disconnect the fan connectors.

© Park Air Systems Limited 2020

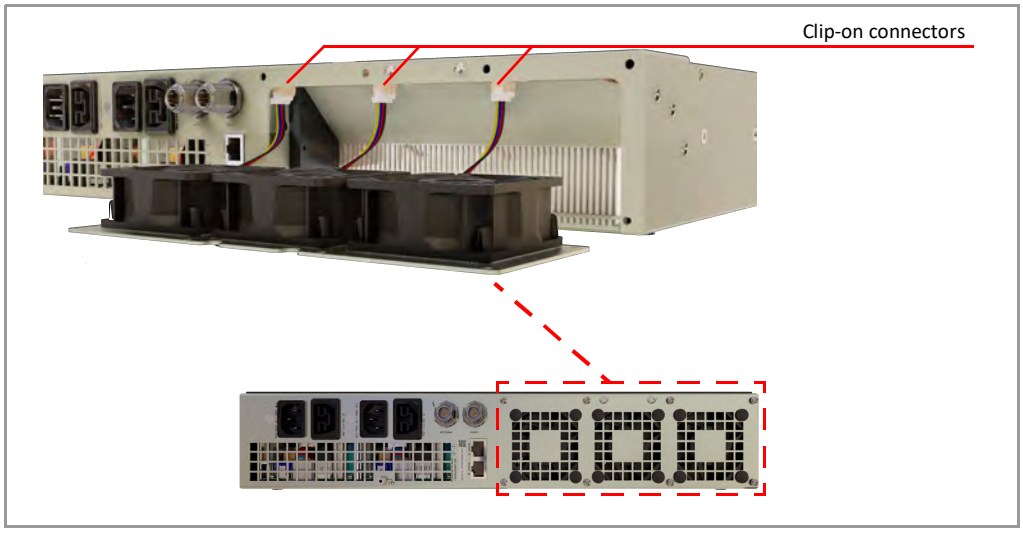

(7) Check the heatsink cooling fins for blockages.

(8) Connect the new fan/screen assembly.

Note:

The fan/screen assembly must be replaced with the same type.

Note the cable and fan position:

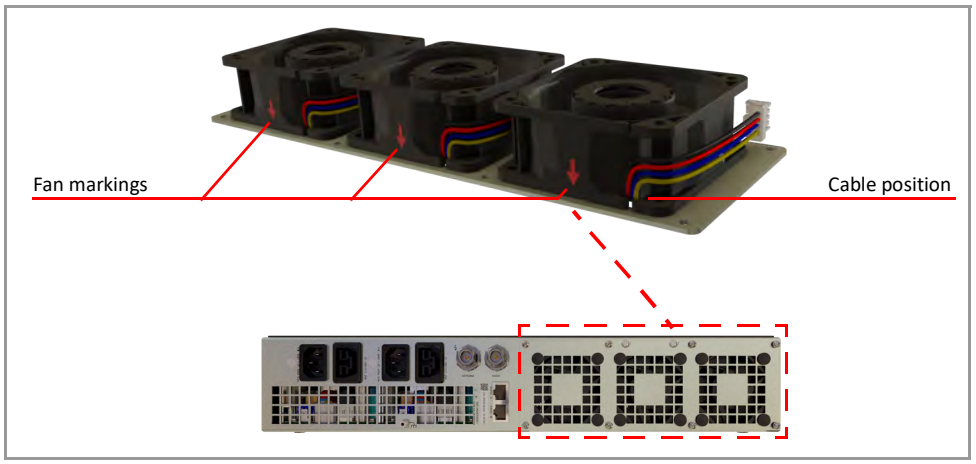

(9) Insert the new fan/screen assembly into the rear of the amplifier.

(10) Fasten the fan/screen assembly with the eight (8) fixing screws.

(11) Install the amplifier to the cabinet (if applicable).

(12) Connect all the cables.

(13) Switch on the amplifier.

The amplifier continually checks the correct function of the fan.

© Park Air Systems Limited 2020

6 Connector information

6.1 Rear panel connectors

The rear panel connector pin-outs:

AMP (amplifier) connector

Connector	Pin	Signal	Configuration	Characteristics
AMP RJ45 **Green cable**	1	PTT input	Pull to ground to key T6 amplifier.	Grounding contact input, pulled up to 5 V. Amber LED illuminates to indicate PTT input is active.
	2	Amplifier status (AS1) output	See table below.	Grounding contact output. Pulled to ground when the T6 amplifier is defective or switched off.
	3	Amplifier status (AS0) output	See table below.	Grounding contact output.
	4	100 W output	Floating to indicate T6 amplifier is 100 W.	Grounding contact output.
	5	Reset bypass input	Pull to ground to assert reset bypass.	Grounding contact input, pulled up to 5 V. Green LED illuminates to indicate reset bypass is asserted.
	6	Inhibit output	Pull to ground to indicate internal RF relays are switching.	Grounding contact output.
	7	Ground (0 V)		Connected to chassis earth.
	8	Supply input	27-29 V indicates to the amplifier that the radio is connected and switched on.	High impedance input.

Amplifier status output signals

Amplifier status bits (Low = pulled to ground)		Amplifier status
AS1	**AS0**	
Low	Low	Amplifier is connected and operating correctly.
Low	High	Amplifier is defective and switched to bypass mode.
High	Low	Amplifier is connected but operating with one power source type (AC or DC). Activated when one power source type is lost.
High	High	Not used.

© Park Air Systems Limited 2020

AC input connector

Connector	Connection	Characteristics
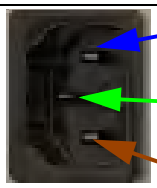	Neutral Earth Live	2 input supplies: 110 to 240 V AC. Frequency: 47 to 63 Hz. No more than 450 VA while the radio transmits under any condition.
AC inputs **IEC-C16 chassis plug**	**Note:** The connections are shown as viewed on the rear panel of the amplifier. The protective earthing connector (earth) must be connected.	
The cable used to connect between the equipment and the user's AC power source must be 3-core (to IEC 227) rated 250 V AC at 8 A, and have a minimum cross-sectional area of 1.0 mm^2 per core. Northrop Grumman recommends the use of polyvinyl chloride (PVC) insulated cable. The cable must be fitted with the IEC approved equipment connector and conform to this specification: ❑ If PVC insulated, be not lighter than ordinary polyvinyl chloride sheathed flexible cable according to IEC publication 227 (designation H05 VV-F, H05 VVH2-F). For North America the cable must be UL listed/CSA recognised ❑ If rubber insulated, be of synthetic rubber and not lighter than ordinary tough rubber-sheathed flexible cable according to IEC publication 245 titled 'Rubber Insulated Cables of Rated Voltage up to and including 450/750 V' (designation H05 RR-F).		

DC input connector

Connector	Connection	Characteristics
	Negative -ve Not connected Positive +ve	2 input supplies: 21 to 32 V DC. 20 A maximum.
DC inputs **Saf-D-Grid chassis plug**	**Note:** The connections are shown as viewed on the rear panel of the amplifier. The DC supply input protects against reverse polarity connection.	
The DC supply cable must have a minimum cross-sectional area of 2.5 mm^2 or 12 AWG per core. If PVC insulated, be not lighter than ordinary polyvinyl chloride sheathed flexible cable according to IEC publication 227 (designation H05 VV-F, H05 VVH2-F). For North America the cable must be UL listed/CSA recognised.		

Earth stud connector

Connector	Connection
 Earth stud **M5 thread**	**Note:** The amplifier is attached by the earth connection to the fixing-lug in the Park Air C4 cabinet. This *must* be attached. Failure to comply with this instruction may result in non-compliance with the EMC Directive 2014/30/EU.

© Park Air Systems Limited 2020

ANTENNA connector

Connector	Connection
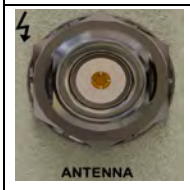 **ANTENNA** **N-type socket**	This connects the amplifier to the antenna RF path.

Radio connector

Connector	Connection
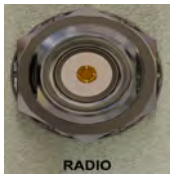 **RADIO** **N-type socket**	This connects the amplifier to the radio(s).

© Park Air Systems Limited 2020

Intentionally blank

© Park Air Systems Limited 2020

7 Specification

7.1 Park Air T6 VHF 100 W Power Amplifier specifications

Parameter	Value
Operating frequencies	112 MHz to 156 MHz
Output Power	10 to 100 W maximum in 2 W steps
Dimensions	79 mm (2U) high 430mm (full-rack) wide 440 mm deep (including connectors)
Weight	<15 kg
Waveform	AM Voice with 25 kHz and 8.3 kHz channel spacings
Interfaces	2 x RJ45 connectors 2 x N-Type connectors
Radio Pair Operation	An amplifier can be used with a pair of main/standby radios without any additional configuration
Operating Temperature Range	-20 to +55C
Standards	See CE type approval on page vii.

7.2 Park Air T6 VHF 100 W Power Amplifier features and benefits

Feature	Benefit	
Environmental Impact and Efficiency	Reduced whole life costs	Efficiency increased and power consumption decreased Ten-year service interval and fifteen-year service lifetime Reduced initial and ongoing costs
	Reduced environmental impact	No RoHS specified materials used Better environmental performance
Quality of Communications	Class-leading RF performance	Excellent reverse intermodulation performance provides a reduction in the requirement for filtering and isolation in the radio system
Safety	RF bypass	Automatic switchover to bypass mode if amplifier fails, ensuring transmission capability (reduced power)
	Flexible features	Independent AC and DC power options
	Intelligent built-in-test	Continually monitors own environment and performance Enters a 'reduced service' state when issues are detected Decreases power output Alerts operator with diagnostic information See 9 Fault finding
Simplified installation, set-up and usability	Tool free installation	No tools required for cabinet installation
	Intuitive user interface	Connect to the amplifier through the radios high resolution OLED graphical display Visual indications of amplifier activity Context-specific soft buttons Indicator icons

© Park Air Systems Limited 2020

Intentionally blank

© Park Air Systems Limited 2020

8 Associated equipment

8.1 Table of associated equipment

Product code	Product name	Notes
T6-TV	Park Air T6 VHF Transmitter	A versatile multimode digital 50 W transmitter.
T6-TRV	Park Air T6 VHF Transceiver	A versatile multimode digital 50 W transceiver.
C4-22U	Park Air C4 22U Cabinet	For integration of Park Air T6 Radios, Z4 Filters and their accessories. Compatible with standard 19 inch rack-mount equipment. Includes cable management system and DIN-rails for rear-mounted components.
C4-32U	Park Air C4 32U Cabinet	
C4-42U	Park Air C4 42U Cabinet	
J4-4WEMSWITCH	Park Air J4 2 Way Audio 4 Wire E&M Line Switch	Switches a single audio 4 Wire E&M line two ways under radio control for interfacing to main/standby T6 Radio pairs. DIN-rail mounted.
R4-MARCS	MARC Server RCMS Application	Comprehensive role-based remote control and monitoring software, accessed via desktop or portable web browser devices, for use with radios and associated radio site equipment. Supplied with dongle licence key.
R4-O-MST6S3	Park Air T6 Radio Module for MARC Server	Allows monitoring and control of Park Air T6 radios from MARC Server.
S2-HST6	Park Air S2 Headset for use with T6 radio's	Robust dual earpiece lightweight headset with PTT switch and noise cancelling flexible boom microphone. Includes integral coiled cable of length 3m (when fully extended) terminated in self-locking plug.
S2-MICT6	Park Air S2 Hand Microphone for use with T6 radio's	For maintenance and general purpose use. Includes integral PTT switch and coiled cable of length 2m (when fully extended) terminated in self-locking plug.
S4-IP	Park Air S4 IP Controller	Remote Control Unit (RCU) hardware with colour LCD touch screen. Operates from AC supply or 12V nominal DC supply. Supplied with universal AC adaptor and lead, DC supply connector and 2m CAT 5 cable.
Z4-FILTSV170	Park Air Z4 VHF 170mm Single Fixed Cavity Filter	A high performance filter. 100 Watts power handling.
Z4-SSRELAY	Park Air Z4 Solid State Changeover Relay	Switches a single RF feed two ways under radio control for interfacing to main/standby radio pairs. DIN-rail mounted.
Z4-SPLIT3DB	Park Air Z4 3dB Receiver Splitter	Splits a single RF feed two ways under radio control for interfacing to main/standby radio pairs. DIN-rail mounted.

© Park Air Systems Limited 2020

Intentionally blank

© Park Air Systems Limited 2020

9 Fault finding

Use the fault finding guidelines below to resolve problems that may arise when operating the amplifier. If the problem remains contact the Park Air Customer Service department, see Park Air V2 Services.

Symptom	Displayed icons and message alerts	Probable cause	Remedy
Amplifier will not power on	No status indicator illuminated.	No available power supply (outage)	Check power supply available.
	No power supply indicator illuminated.	Power supply cables not connected correctly.	Check both AC/AC and DC/DC power supply connectors.
Reduction in power output	Radio home screen displays "*Reduced Service*" message. Status indicator illuminates red. Spanner fault code indicator illuminated.	Internal fault.	Contact Park Air Customer Services.
	Radio home screen displays "*Reduced Service*" message. Status indicator illuminates red. Antenna fault code indicator illuminated.	High VSWR.	Check connections. Check RF feeder Check antenna Check surge arrestor devices.
	Radio home screen displays "*Reduced Service*" message. Status indicator illuminates red. Temperature fault code indicator illuminated.	Amplifier over-temperature.	Check fans, if defective see "fan *failure"* remedy steps. Check cabinet fans (if fitted). Check ambient temperature. Check all ventilation for blockages/restrictions.
	Radio home screen displays "*Reduced Service*" message. Status indicator illuminates red. Fanfault code indicator illuminated.	Fan failure.	1. Turn off amplifier. 2. Disconnect power supply. 3. Connect radio directly to antenna. 4. Link radios (if required) 5. Replace fans. 6. Reconnect amplifier. 7. Complete a function test.
Amplifier will not transmit	Radio home screen displays "*VSWR*" message.	No RF connection	Check and secure all connections.
Amplifier displays a single power source type	Radio home screen displays "Reduced Status - Amplifier" Absent power source type indicator is extinguished on amplifier.	No available power supply (outage)	Check power supply available.
		Power supply cables not connected correctly.	Check affected power supply connectors.

© Park Air Systems Limited 2020

Intentionally blank

© Park Air Systems Limited 2020

Annex

Antenna radiation limits - health and safety

Antenna radiation

The transmit antenna must be installed such that the resultant radiated field strength is below national limits. The safe distance must be calculated for each installation.

Countries within the European Union

The compliance boundaries can be calculated using method in EN 62232:2017, Determination of field strength, power density and flux density in the vicinity of radio communication base stations for the purpose of evaluating human exposure. The limits are shown in the table below:

Level	Frequency (MHz)	Power density (W/m^2)	Electric field strength (V/m)	Magnetic field strength (A/m)	Magnetic flux density (T)
*Occupational level	100 - 400		61		0.2µ
*General population level	100 - 400	2	28	0.073	0.092µ

Notes:

*Occupation level limits in adherence to EU occupational limits directive 2013/35/EU.

*General population level limits in adherence to EU general public limits directive 1999/519/EC.

Example

The safe distance from the antenna can be predicted using the equations:

$$R = \sqrt{\frac{PG}{4\pi S}} \qquad S = H^2\eta$$

$$S = E^2/\eta$$

$$S = \eta(B/\mu_0)^2$$

where,

R = distance to centre of radiation in metres (m)

P = average power input to antenna in Watts (example, 100 W carrier with 95% modulation = 145 W)

G = antenna gain as a ratio (example, 2 dB = $10^{2/10}$ = 1.585)

S = power density in W/m^2H

H = magnetic field strength (A/m)

© Park Air Systems Limited 2020

E = electric field strength (V/m)

B = magnetic flux density (T)

η = impedance of free space (377 Ω in far field)

μ_0 = permeability of free space ($4x10^{-7}\pi$) (H/m).

Based on this formula and using a 2 dBi antenna,

For occupational workers (RF and microwave):

- The predicted safe distance from the centre of the radiation would be approximately 1.4 m for values as shown in the table.

For persons not classed as occupational workers, and including the general public:

- The minimum safe distance would be 3.1 m for values as shown in the table.

Note:
Safe distances are rounded up to the nearest 0.1 m.

Correct at 27th February 2020.

For Canada, please see overleaf.

© Park Air Systems Limited 2020

Canada

The RF power density limits according to Health Canada Safety Code 6, are shown in the table below:

Frequency MHz	Occupational level W/m^2	General population level W/m^2
112.000	6.83	1.29
118.000	7.01	1.29
127.500	7.28	1.29
136.975	7.55	1.29
155.975	8.06	1.29
225.000	9.68	1.29
300.000	11.18	1.29
399.975	12.90	1.57

The general equation for Occupational level:

RF power density = $0.6455\ f^{0.5}\ W/m^2$

where, f = frequency in MHz.

The general equations for General population level:

For 100 to 300 MHz, RF power density = $1.291\ W/m^2$ and,

for 300 to 400 MHz, RF power density = $0.02619\ f^{0.6834}\ W/m^2$

where, f = frequency in MHz.

Example

The safe distance from the antenna can be predicted using the equation:

where,

$$R = \sqrt{\frac{PG}{4\pi S}}$$

R = distance to centre of radiation in metres (m)

P = average power input to antenna in Watts (example, 100 W carrier with 95% modulation = 145 W)

G = antenna gain as a ratio (example, 2 dB = $10^{2/10}$ = 1.585)

S = power density in W/m^2.

Based on this formula and using a 2 dBi antenna, frequency of 118.000 MHz and a measured carrier power of 100 W, for occupational workers:

- The predicted safe distance from the centre of the radiation would be approximately 1.7 m.

For persons not classed as occupational workers, and including the general public:

- The minimum safe distance would be 3.8 m.

Note:

Safe distances are rounded up to the nearest 0.1 m.

Correct at 27th February 2020.

For United States of America, please see overleaf.

© Park Air Systems Limited 2020

United States of America

The RF power density limits according to FCC directive CFR 47 Part 2.109, are shown in the table below:

Frequency MHz	Occupational level W/m^2	General population level W/m^2
112.000 - 300.000	10.0	2.00
399.975	13.34	1.57

The general equations for Occupational level:

For 100 to 300 MHz, RF power density = 10 W/m^2, and

For 300 to 400 MHz, RF power density = f /30 W/m^2

where, f = frequency in MHz.

The general equations for General population level:

For 100 to 300 MHz, RF power density = 2.0 W/m^2 and,

for 300 to 400 MHz, RFR power density = f /150 W/m^2

where, f = frequency in MHz.

Example

The safe distance from the antenna can be predicted using the equation:

$$R = \sqrt{\frac{PG}{4\pi S}}$$

where,

R = distance to centre of radiation in metres (m)

P = average power input to antenna in Watts (example, 100 W carrier with 95% modulation = 145 W)

G = antenna gain as a ratio (example, 2 dB = $10^{2/10}$ = 1.585)

S = power density in W/m^2.

Based on this formula and using a 2 dBi antenna, frequency of 118.000 MHz and a measured carrier power of 100 W, for occupational workers:

- The predicted safe distance from the centre of the radiation would be approximately 1.4 m.

For persons not classed as occupational workers, and including the general public:

The minimum safe distance would be 3.1 m.

Note:
Safe distances are rounded up to the nearest 0.1 m.

© Park Air Systems Limited 2020