TB9400 Base Station/Repeater

Installation and Operation Manual

MBC-00001-16 · Issue 16 · July 2017

www.taitradio.com

Contact Information

Tait Communications
Corporate Head Office

Tait Limited
P.O. Box 1645
Christchurch
New Zealand

For the address and telephone number of regional offices, refer to our website: www.taitradio.com

Copyright and Trademarks

All information contained in this document is the property of Tait Limited. All rights reserved.
This document may not, in whole or in part, be copied, photocopied, reproduced, translated, stored, or reduced to any electronic medium or machine-readable form, without prior written permission from Tait Limited.

The word TAIT and the TAIT logo are trademarks of Tait Limited.

All trade names referenced are the service mark, trademark or registered trademark of the respective manufacturers.

Disclaimer

There are no warranties extended or granted by this document. Tait Limited accepts no responsibility for damage arising from use of the information contained in the document or of the equipment and software it describes. It is the responsibility of the user to ensure that use of such information, equipment and software complies with the laws, rules and regulations of the applicable jurisdictions.

Enquiries and Comments

If you have any enquiries regarding this document, or any comments, suggestions and notifications of errors, please contact your regional Tait office.

Updates of Manual and Equipment

In the interests of improving the performance, reliability or servicing of the equipment, Tait Limited reserves the right to update the equipment or this document or both without prior notice.

Intellectual Property Rights

This product may also be made under license under one or more of the following patents:
- US7203207, AU2004246135, CA2527142, GB2418107, HK1082608, MY134526, US8306071
- US7339917, AU2004246136, CA2526926, GB2418812, MY134217
- US7499441, AU2005262626, CA2570441, GB2430333, JP4690397, NZ551231, KR100869043, RU2351080, BRP10512052, MXPA06015241
- US 7200129, AU2005226531, CA2558551, CN1930809, GB2429378, JP4351720, BRP10508671, NZ549124, KR848483, RU2321952

The AMBE+2™ voice coding Technology embodied in this product is protected by intellectual property rights including patent rights, copyrights and trade secrets of Digital Voice Systems, Inc. This voice coding Technology is licensed solely for use within this Communications Equipment. The user of this Technology is explicitly prohibited from attempting to decompile, reverse engineer, or disassemble the Object Code, or in any other way convert the Object Code into a human-readable form.

Tait Limited is an environmentally responsible company which supports waste minimization, material recovery and restrictions in the use of hazardous materials.

The European Union's Waste Electrical and Electronic Equipment (WEEE) Directive requires that this product be disposed of separately from the general waste stream when its service life is over. For more information about how to dispose of your unwanted Tait product, visit the Tait WEEE website at www.taitradio.com/weee. Please be environmentally responsible and dispose through the original supplier, or contact Tait Limited.

Tait Limited also complies with the Restriction of the Use of Certain Hazardous Substances in Electrical and Electronic Equipment (RoHS) Directive in the European Union.

In China, we comply with the Measures for Administration of the Pollution Control of Electronic Information Products. We will comply with environmental requirements in other markets as they are introduced.

Contents

Preface **7**
Scope of Manual 7
Document Conventions 7
Associated Documentation 8
Publication Record 9

1 Description **10**
1.1 Features 11
1.2 Modules 12
1.3 Mechanical Assembly 15
1.4 Frequency Bands and Sub-bands 18
1.5 Applications 19
1.6 Licenses 20
1.7 Theory of Operation 22
1.7.1 Signal Paths 24
1.7.2 Online and Offline Modes 24
1.7.3 Intermodule Communications 25
1.7.4 Power Management and Distribution 26
1.7.5 PMU Operation on DC Input 28
1.7.6 Front Panel Fans 31

2 General Safety and Regulatory Information **32**
2.1 Personal Safety 32
2.1.1 Unpacking and Moving the Equipment 32
2.1.2 Lethal Voltages 32
2.1.3 AC Power Connection 33
2.1.4 Explosive Environments 33
2.1.5 High Temperatures 33
2.1.6 LED Safety (EN60825-1) 33
2.1.7 Proximity to RF Transmissions / A proximité des émissions RF 34
2.2 Equipment Safety 35
2.2.1 Installation and Servicing Personnel 35
2.2.2 Preventing Damage to the PA 35
2.2.3 ESD Precautions 35
2.2.4 Anti-tampering Devices 36
2.3 Environmental Conditions 36
2.3.1 Operating Temperature Range 36
2.3.2 Humidity 36
2.3.3 Dust and Dirt 36
2.4 Regulatory Information 37
2.4.1 Distress Frequencies 37

© Tait Limited July 2017

2.4.2 Compliance Standards . . . 37
2.4.3 FCC Compliance . . . 37
2.4.4 Unauthorized Modifications . . . 37

3 Operation . . . 38

3.1 Front Panel . . . 39

3.2 Module Indicator LEDs and Switches . . . 43
3.2.1 Reciter and Receiver . . . 43
3.2.2 PA . . . 45
3.2.3 PMU . . . 46

4 Installation . . . 48

4.1 Before You Begin . . . 49
4.1.1 Equipment Security . . . 49
4.1.2 Grounding and Lightning Protection . . . 49
4.1.3 Equipment Ventilation . . . 49
4.1.4 Ambient Temperature Sensor . . . 49
4.1.5 Cabinet and Rack Ventilation . . . 50

4.2 Unpacking and Moving the Subrack . . . 52

4.3 Identifying the Equipment . . . 54

4.4 Initial Setting Up . . . 56
4.4.1 Confirming Operation . . . 56
4.4.2 Working with Configurations . . . 58
4.4.3 Customizing the Configuration . . . 59
4.4.4 Recommended Configuration Settings . . . 59
4.4.5 Restricted Port Numbers . . . 59
4.4.6 Changing the Root Password . . . 60
4.4.7 Tuning the Reciter and Receiver . . . 61

4.5 Installing the Base Station on Site . . . 65
4.5.1 General Installation Advice . . . 65
4.5.2 Equipment Required . . . 66
4.5.3 Mounting the Subrack . . . 67

4.6 Connecting Up the Base Station . . . 71
4.6.1 Connection Overview . . . 71
4.6.2 Connecting AC Power . . . 72
4.6.3 Connecting DC Power . . . 73
4.6.4 Connecting the Auxiliary DC Power Output . . . 74
4.6.5 Connecting RF . . . 75
4.6.6 Connecting an External Frequency Reference . . . 76
4.6.7 Connecting a 1 PPS Source . . . 77
4.6.8 Ethernet Connection . . . 77
4.6.9 Connecting General Purpose Inputs and Outputs . . . 79

5 Working with Base Stations from Your PC . . . 80

5.1 PC Recommendations . . . 81

5.2 Connecting Your PC to the Base Station . . . 81
5.2.1 Logging In . . . 82

© Tait Limited July 2017

5.2.2 Setting the IP Address 83
5.2.3 Security Certificates 84
5.2.4 Connecting a Networked PC to a Base Station 85
5.2.5 Troubleshooting Connection Problems 87
5.2.6 Finding a Lost or Forgotten IP Address 87
5.2.7 Setting Up Authentication 88

5.3 Working with the Web Interface 89
5.3.1 Monitoring Operation 90
5.3.2 Troubleshooting Alarms 91
5.3.3 Viewing Configuration Settings 91
5.3.4 Viewing the Base Station and Network Identity 94

5.4 Basic Tasks 95
5.4.1 User Settings 95
5.4.2 Taking the Base Station Offline 95
5.4.3 Working with Configuration Files 95
5.4.4 Configuring Single Base Stations 96
5.4.5 Configuring Receive-Only Base Stations 97
5.4.6 Configuring Base Stations in a Channel Group 97
5.4.7 Setting Up Custom Alarms 97
5.4.8 Disabling the Front Panel Keypad 98
5.4.9 Preparing to Download Firmware 98
5.4.10 Checking for Interference on a Receive Channel 100

6 Maintenance 101

7 Troubleshooting 103

8 Replacing Modules 104

8.1 Saving the Base Station's Configuration 105
8.2 Preliminary Disassembly 106
8.3 Replacing a Reciter 108
8.4 Replacing a Power Amplifier 110
8.5 Replacing a Power Management Unit 112
8.6 Replacing the Module Guide Rails 113
8.7 Replacing the Subrack Interconnect Board 114
8.8 Final Reassembly 115

Appendix A – Interface Pin Allocations 116

System Interface Connector 116
Ethernet Connector 116
PMU Auxiliary DC Output 116

Appendix B – Inter-Module Connections 117

Dual 50 W Base Station 117

© Tait Limited July 2017

Single 50 W Base Station 118
100 W Base Station 119
Receive-only Base Station 120

Appendix C – Identifying Front Panels 121

Glossary 122

Tait Software License Agreement 134

Directive 1999/5/EC Declaration of Conformity 138

© Tait Limited July 2017

Preface

Scope of Manual

This manual provides information on installing and operating the TB9400 base station. It is intended for use by experienced technicians familiar with installing and operating base station equipment. It also includes configuration, maintenance and troubleshooting information.

Except where stated otherwise, the information in this manual generally applies to both standard and receive-only base stations and reciters. When “reciter” is referred to, this generally applies also to the receiver (receive-only reciter). References to power amplifiers (PAs) and transmitting obviously do not apply to receive-only equipment.

Unless mentioned specifically, this manual will use the term “base station” to refer to both base station and repeater.

Document Conventions

The TB9400 base station has a web interface with an accordion menu on the left side of the screen. “Configure > Base Station > Channels” means click Configure in the top-level menu, then in the expanded Configure menu click Base Station, and finally click on the Channels tab on that page.

Within this manual, four types of alerts may be given to the reader. The following paragraphs illustrate each type of alert and its associated symbol.

Warning **This alert is used when there is a hazardous situation which, if not avoided, could result in death or serious injury.**

Caution This alert is used when there is a hazardous situation which, if not avoided, could result in minor or moderate injury.

Notice This alert is used to highlight information that is required to ensure procedures are performed correctly. Incorrectly performed procedures could result in equipment damage or malfunction.

This icon is used to draw your attention to information that may improve your understanding of the equipment or procedure.

© Tait Limited July 2017

Associated Documentation

The following associated documentation for this product is available on the Tait support website.

- TB9400 Specifications Manual (MBC-00002-xx)
- TN9400 P25 Trunked Network Maintenance Manual (MNC-00001-xx)
- TaitNet P25 Trunked Networks with TB9400 Base Stations System Manual (MBA-00064-xx)
- TaitNet Analog Conventional Networks with TB9400 Base Stations System Manual (MND-00001-xx)
- Safety and Compliance Information (MBA-00012-xx)

The characters **xx** represent the issue number of the documentation.

Technical notes are published from time to time to describe applications for Tait products, to provide technical details not included in manuals, and to offer solutions for any problems that arise. Technical notes are available in PDF format from the Tait support website. For more information contact your regional Tait office.

© Tait Limited July 2017

Publication Record

Issue	Publication Date	Description
1	May 2012	First release
2	November 2012	General updates for version 1.15 release. Information added on compliance standards, marshalling duration, firmware download procedure, and restricted port numbers.
3	May 2013	General updates for version 1.20 release and the B3-band base station. Front end tuning procedure added.
4	August 2013	General updates for version 1.25 release and the H-band base station. Information added for dual 50W and receive-only base stations.
5	November 2013	General updates for version 1.30 release. Minor updates for receive-only base station. Directive 1999/5/EC Declaration of Conformity added.
6	April 2014	General updates for version 1.35 release. PMU fan thresholds updated. Information added on proximity to RF transmissions, AAA Authentication, and checking for interference on a receive channel.
7	August 2014	General updates for version 1.40 release. Information added for K4-band receive-only base station, and P25 Phase 2 operation.
8	November 2014	General updates for version 1.45 release. Information added for P25 Phase 2 licenses.
9	March 2015	General updates for version 2.00 release. Information added on P25 Phase 2 operation.
10	July 2015	General updates for version 2.05 release. Information added for receive-only base stations and receiver modules, feature licenses, uploading security certificates, and external frequency reference stability requirements.
11	November 2015	General updates for version 2.10 release. Information added for analog base stations. Feature license names updated.
12	March 2016	General updates for version 2.15 release. Clarification of repeater vs. base station for K band in Brazil added.
13	June 2016	General updates for version 2.20 release. Added P25 Conventional features, modified licence table, updated and annotated images and general updates.
14	November 2016	General updates for version 2.25 release: Added Working with Configurations. Updated images in Troubleshooting Alarms and Viewing Configuration Settings. Added the TBAS060 DFSI license. Added an explanation of channels profiles and how to work with them on the WUI.
15	March 2017	General updates for version 2.30 release. Updated description for the TBAS060 within Licenses on page 20. Updated description of modulation types in Features on page 11 - bullet points 1 and 3. Added statement that central voter and satellite licences are not both required. Information added regarding variations of front panel to Front Panel on page 13 Added statement informing clients to change default passwords.
16	July 2017	General updates for version 2.35 release. General minor wording and content changes throughout Added P25 Conventional Simulcast Repeater to Features on page 11 Central voter and satellite licences listed as alternatives Licenses on page 20. Updated description for the ‘Digital Fixed Station’ Interface in Licenses on page 20. Updated the “Licenses and applicability” table for Central Voter, IP Networking Satellite, and Simulcast. Added new H3 band information throughout. Screenshots have been updated in various places.

1 Description

The Tait TB9400 base station is a robust state-of-the-art digital fixed station that combines Tait's proven strengths in reliability, high performance and modular design with software-based configurability and operation, digital signal processing, and voice-over-IP technology.

The base station operates as a transceiver in Project 25 trunked, trunked simulcast radio networks and P25 conventional. It is capable of either P25 Phase 1 FDMA operation, or 6.25 kHz equivalent P25 Phase 2 TDMA operation.

The TB9400 can also operate in an analog conventional simulcast or non-simulcast multi-site network.

The base station combines industry-leading digital voice quality with rugged design specifications and intuitive user interfaces. These products have been designed to meet the demanding needs of the public safety and public service sectors.

The ability of the base station to link stations using standard Internet Protocol communications, and to add features through software options ensures that P25 systems designed with the TB9400 are scalable in both size and functionality.

Its Ethernet interface provides built-in network connectivity, allowing the TB9400 to join with other TB9400 base stations to form a channel group. This network supports voice-over-IP and remote management of all base stations via a web browser.

© Tait Limited July 2017

1.1 Features

The following are some of the features of the base station:

- Fully compliant with the Project 25 Common Air Interface. Can therefore interoperate with any similarly compliant radios.
- Supports P25 Phase 1 operation with either C4FM or LSM modulation on the transmitter
- Supports P25 Phase 2 operation.
- Analog conventional repeater operation.
- Analog conventional simulcast operation on an IP backbone requiring no audio calibration or training.
- Linear power amplifier allows operation with Linear Simulcast Modulation (LSM).
- Integrated built-in voting facility. No external voter is needed.
- P25 simulcast conventional repeater.
- Can be completely managed remotely from a PC running a web browser: configuration, alarm monitoring, fault diagnosis, feature and firmware upgrades. Alarms can also be reported via SNMP traps, allowing integration with an SNMP-based network management system.
- An integrated wiring solution is provided for the system control bus and DC power connections to each module in the subrack.
- Reciters (receiver/exciter modules) can be replaced without affecting the operation of other reciters in the same subrack.
- Rugged construction with generous heatsinks and fan-forced cooling for continuous operation from –22°F to +140°F (–30°C to +60°C).

© Tait Limited July 2017

1.2 Modules

The base station consists of a subrack with up to two transmit/receive channels, or up to four receive-only channels.

Receive-only base stations are currently available for operation only on B3 band (148 MHz to 174 MHz), H1 band (400 MHz to 440 MHz), H2 band (440 MHz to 480 MHz), H3 band (470 MHz to 520 MHz), and K4 band (762 MHz to 870 MHz)[1].

The single PMU (power management unit) supplies and manages power to the whole subrack (refer to "Theory of Operation" on page 22). One reciter and one PA (power amplifier) are needed for each transmit/receive channel. The PA is not required for a receive-only base station. There is also a front panel with user controls and fans. The modules are interconnected at the front of the subrack. External connections to the modules are located at the rear.

Modules come in different variants depending, for example, on the RF band or the supply voltage.

Each module is inserted into the 4 U subrack from the front and is secured at the front with a metal clamp. Both clamp and module are easily removed for rapid module replacement. The modules are secured laterally with plastic guides that clip into the top and bottom of the subrack. These guides can be easily repositioned to change the configuration of a subrack. The heavier modules are also secured laterally by metal tabs at the rear of the subrack.

The following provides a brief description of the available modules.

Subrack

The 4 U subrack is made of passivated steel and is designed to fit into a standard 19 inch rack or cabinet. The subrack is fitted with an interconnect board that connects the system control bus and power to the modules and front panel. The position of a module in the subrack is defined by the socket on the subrack interconnect board to which the module is connected by the system control bus.

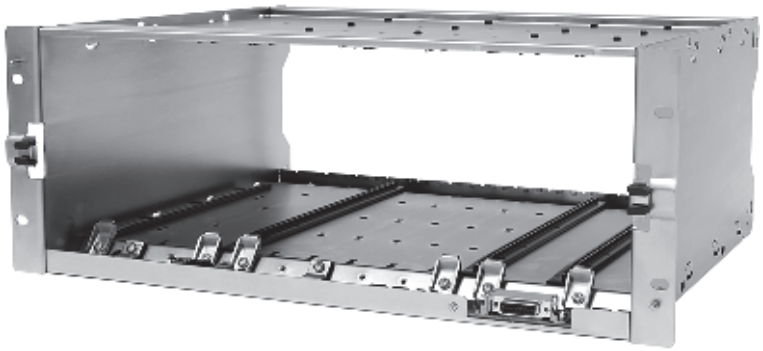

1. Refer to "Frequency Bands and Sub-bands" on page 18.

© Tait Limited July 2017

Front Panel

The front panel is mounted onto the subrack with two quick-release fasteners. It incorporates the indicator LEDs, four-line LCD display, user controls, ambient temperature sensor and cooling fans.

The indicator LEDS allow some monitoring of the operational status of the base station. The user controls and display allow the technician to configure the IP address of each module. Refer to "Front Panel" on page 39 for more information.

ⓘ The base stations have different front panel ducting arrangements depending on PA type and power. Front panels may not be interchangeable.

ⓘ The microphone input and speaker are not used in this release of the TB9400.

Reciter

The reciter module comprises the receiver, exciter and digital control circuitry. The reciter provides the Ethernet interface and system inputs and outputs.

Receiver modules (receive-only reciters) are not fitted with the transmit circuitry or front panel SMA connectors, and are physically unable to transmit.

reciter

receiver

Power Amplifier

The PA amplifies the RF output from the reciter and is available in 50 W and 100 W models.

The 50 W model mounts vertically in the subrack, while the 100 W model mounts horizontally as it has a wider heatsink. The 100 W PA is also fitted with an airflow duct.

50 W PA

100 W PA

Both models are designed to operate on the 28 VDC output provided by the PMU. PAs are not required in a receive-only base station.

Power Management Unit

The PMU provides the 28 VDC power supply for the modules in the subrack. It can operate on 120/230 VAC 50/60 Hz nominal, and 12, 24 or 48 VDC nominal. The input voltage can be AC, DC, or both AC and DC, depending on the model. The PMU also has an auxiliary DC output of 13.65 VDC, 27.3 VDC, or 54.6 VDC, depending on the model.

AC and DC PMU shown

© Tait Limited July 2017

1.3 Mechanical Assembly

This section illustrates the main mechanical components of the base station.

Figure 1.1 below shows the configuration for a typical dual 50 W base station. The subrack has six slots, numbered from right to left as viewed from the front of the subrack. The PMU occupies slots 5 and 6, with the reciter and PA pairs to the right of it in slots 1 to 4. Each PA is mounted vertically with its heatsink facing its associated reciter. The PMU and each reciter/PA pair have their own cooling fans.

The front panel can be easily removed from the subrack by undoing two quick-release fasteners. Refer to "Replacing Modules" on page 104 for more details.

Figure 1.1 Mechanical assembly - dual 50 W base station with front panel

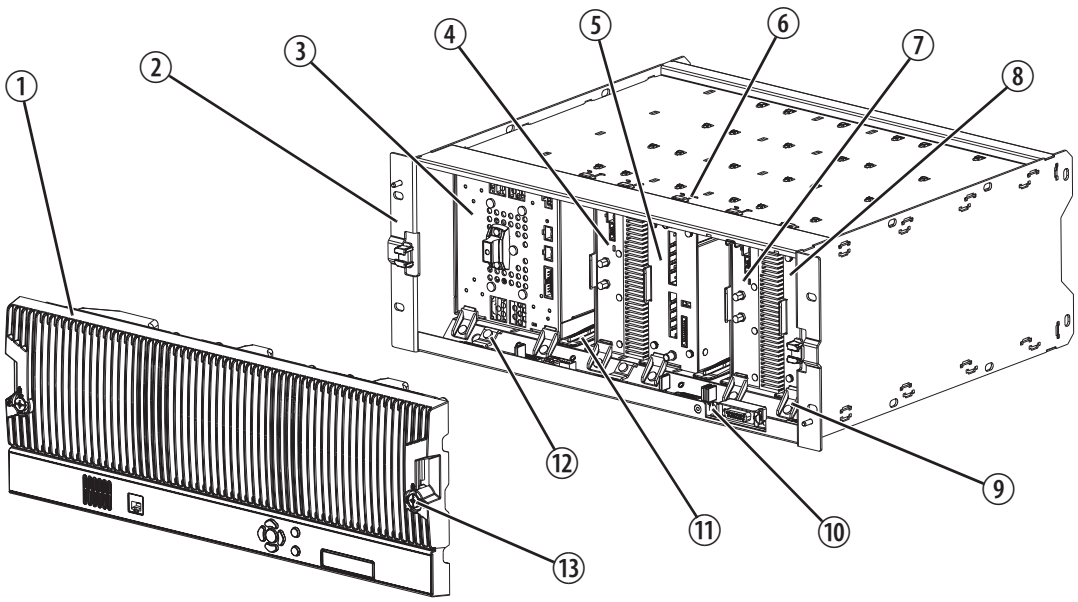

1. front panel
2. subrack
3. PMU
4. PA 2
5. reciter 2
6. cable retaining clip
7. PA 1
8. reciter 1
9. module retaining clamp
10. subrack interconnect board
11. plastic guide rail
12. subrack interconnect board retaining clamp
13. front panel fastener

Figure 1.2 below shows the configuration for a typical single 50 W base station. The PMU again occupies slots 5 and 6, with the reciter in slot 1 and PA in slot 2. The PA is mounted vertically with its heatsink facing the reciter. The PMU and the reciter/PA pair have their own cooling fans.

Figure 1.2 Mechanical assembly - single 50 W base station

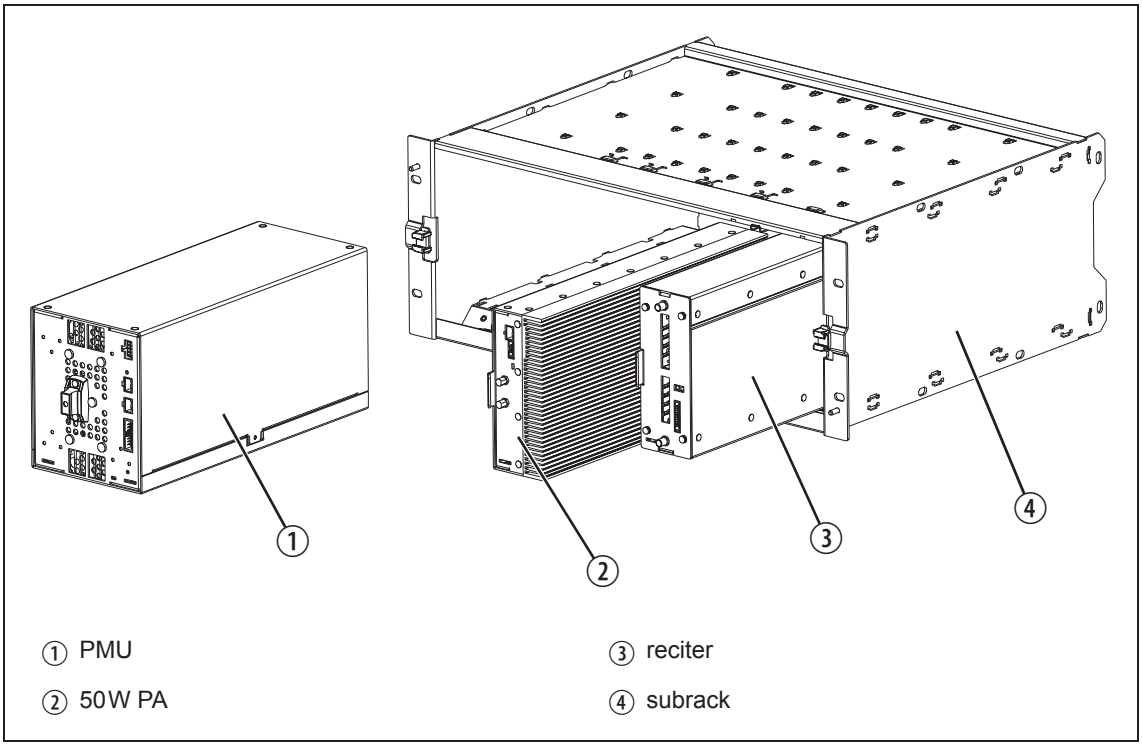

© Tait Limited July 2017

Figure 1.3 below shows the configuration for a typical 100 W base station. The PMU occupies slots 5 and 6, with the PA directly beside it in slots 3 and 4. The reciter occupies slot 1. Unlike the 50 W PAs, the 100 W PA is mounted horizontally with the heatsink facing upwards. It is also fitted with an airflow duct to channel the airflow from the cooling fan through the heatsink fins.

Figure 1.3 Mechanical assembly - single 100 W base station

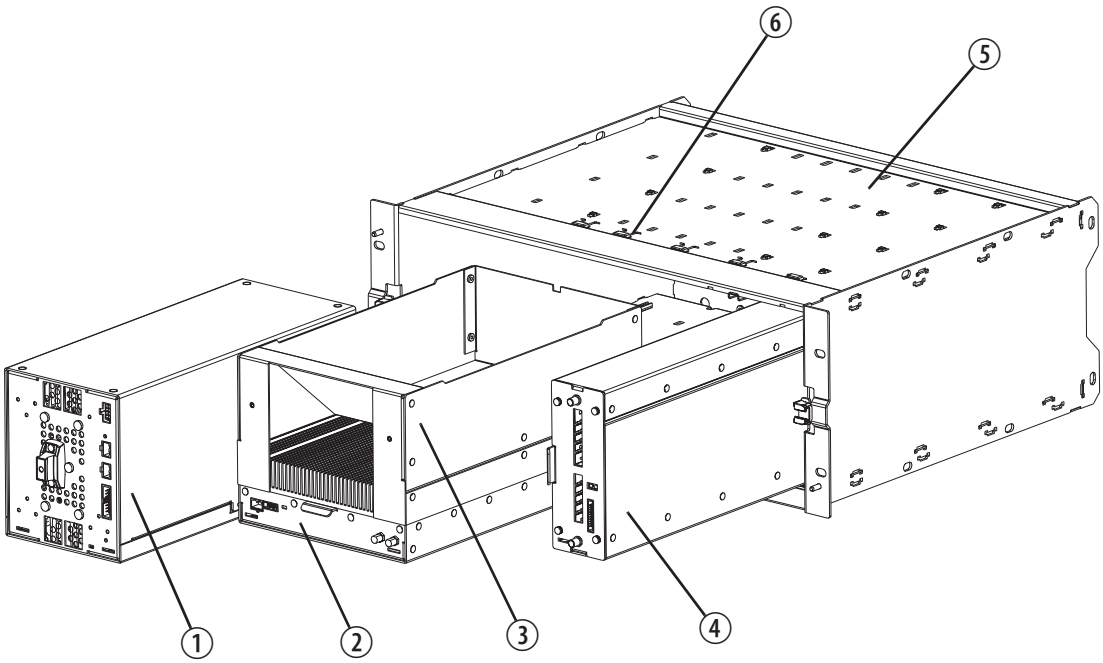

① PMU
② PA
③ airflow duct
④ reciter
⑤ subrack
⑥ cable retaining clip

1.4 Frequency Bands and Sub-bands

Much of the circuitry in the base station is common to all frequency bands, and is therefore covered by a single description in this manual. In some cases the descriptions refer to specific bands or sub-bands, and these are identified with the letters listed in the following table.

Frequency Identification	Frequency Band and Sub-band	50W	100W	Receive-only
B band	B3 = 148MHz to 174MHz	✓	✓	✓
H band	H1 = 400MHz to 440MHz H2 = 440MHz to 480MHz H3 = 470MHz to 520MHz	✓	✓	✓
K band	K4 = 762 MHz to 870MHz[a]	✓	✓	✓

a. The actual frequency coverage in this band is:

Transmit: 762MHz to 776MHz, and 850MHz to 870MHz
Receive: 792MHz to 824MHz

In Brazil, for K band, the TB9400 is considered to be configured as a base station with retransmission of receive frequencies.

© Tait Limited July 2017

1.5 Applications

The TB9400 operates in P25 trunked networks (Phase 1 or Phase 2), P25 conventional networks and analog conventional networks. It operates as a stand-alone repeater/base station, or as part of a channel group, providing receiver voting and simulcast transmission. All air interfaces and system types support simulcast operation.

In P25 Phase 2 operation, a single TB9400 base station can provide two traffic channels, since each radio frequency (physical channel) provides two logical channels (timeslots). However, it can provide only one control channel, since control channels are still P25 Phase 1.

In a trunked simulcast network, the transmitters in the channel group are synchronized and transmit simultaneously on the same frequency. Each transmitter needs a highly accurate 1 PPS pulse and an external frequency reference, so that it can time transmissions with the required accuracy. Also required is an NTP source that is derived from the same source as the 1 PPS signal. This will ensure a common timestamp in logs across all units in the system. An external frequency reference, along with an NTP source and 1 PPS signal derived from the same GPS source, are also essential for all reciters for P25 Phase 2 operation.

In a P25 conventional network, the TB9400 operates as a single or wide area conventional repeater, with receiver voting and optional simulcast. Dispatch connection is via the Tait P25 Console Gateway, supporting conversion between P25 and analog consoles with MDC1200 signalling.

In an analog conventional network it can operate as a repeater with CTCSS[1] or DCS subaudible signaling.

The base station can also operate as part of an analog conventional simulcast network and is fully IP-connected. It also features an integral voter (thus requiring no external voter).

The base station can be provided as a receive-only variant in systems that need sites to enhance the receive coverage. The receiver module in a receive-only base station is physically unable to transmit.

The base station can be configured for Shared Channel operation, to detect interference on the uplink, as long as the site controller is compatible.

For more information on these applications, refer to the Help and appropriate Tait System Manual.

1. Private Line (PL).

© Tait Limited July 2017

1.6 Licenses

Some operational functions of the base station are controlled by licenses. These functions will not work unless you purchase the appropriate feature license and enable the feature set controlled by that license. The feature sets currently available are listed below.

ⓘ The central voter and satellite licences listed below are alternatives.

Analog Air Interface (TBAS041 - Default Licence)

A base station with this license can operate as a repeater in an analog conventional network.

P25 Common Air Interface (TBAS050)

Allows the base station to go into Online mode. Base stations are always provided with this license.

P25 Trunking Operation (TBAS056)

Allows the base station to participate in Trunking Operation. Without this feature, the base station cannot provide a control or a status connection to a trunking site controller and it cannot function as a control or traffic channel.

Digital Fixed Station Interface (TBAS060)

Allows the base station to integrate with dispatch consoles supporting DFSI (Digital Fixed Station Interface).

Central Voter (TBAS061)

P25 and analog. This feature allows a base station to act as a central voter.

Simulcast (TBAS062)

This feature is required in base stations that have transmitters and belong to a P25 Phase 1 simulcast or analog simulcast network[1]. It is also required in the central voter of a simulcast channel.[2]

Linear Simulcast Modulation (TBAS065)

P25 only. Allows the base station to transmit using the LSM modulation scheme[1]. This scheme allows increased site separation in simulcast networks. Also requires the Simulcast license (TBAS062).

P25 Trunking Failsoft (TBAS063)

Allows trunked channels that become isolated from a site controller to perform simple conventional operation and to interface to a digital dispatch system. If a trunked channel consists of several base stations in a channel group, only the central voter (normally the master) needs this license. It is then able to become the failsoft repeater for that channel group.

---

1. Not needed for receive-only base stations.
2. The central voter in a simulcast channel needs the respective Phase 1 or Phase 2 simulcast license. Normally, a transceiver member of a simulcast channel will have a simulcast license, so this constraint should not be an issue.

© Tait Limited July 2017

P25 Phase 2 Trunking (TBAS066)

This feature allows the base station to operate in trunking mode using two-slot TDMA as defined by the P25 Phase 2 standards.

P25 Phase 2 Simulcast (TBAS069)

This feature is required in base stations that have transmitters and belong to a P25 Phase 2 simulcast network[1]. It is also required in the central voter of a P25 Phase 2 simulcast channel[2]. Also requires the P25 Phase 2 Trunking (TBAS066) and Simulcast (TBAS062) licenses. Tait also recommends adding the Linear Simulcast Modulation (TBAS065) license as it provides improved RF performance.

IP Networking Satellite (TBAS071)

All system types and all air interface types. This feature allows a base station to be part of a channel group without requiring the Central Voter (TBAS061) license.

Table 1.1 Licenses and applicability

Licence	Name	Air Interface	System Type
TBAS041	Analog Air Interface	Analog	Conventional
TBAS060	Digital Fixed Station Interface	Analog & P25 Phase 1	Conventional
TBAS061	Central Voter	Analog & P25 Phase 1 & 2	Trunked, Conventional
TBAS071	IP Networking Satellite	Analog & P25 Phase 1 & 2	Trunked, Conventional
TBAS062	Simulcast	Analog & P25 Phase 1 & 2	Trunked, Conventional
TBAS050	P25 Common Air Interface	P25 Phase 1 & 2	Trunked, Conventional
TBAS065	Linear Simulcast Modulation	P25 Phase 1 & 2	Trunked, Conventional
TBAS056	P25 Trunking Operation	P25 Phase 1 & 2	Trunked
TBAS063	P25 Trunking Failsoft	P25 Phase 1 & 2	Trunked
TBAS066	P25 Phase 2 Trunking	P25 Phase 1 & 2	Trunked
TBAS069	P25 Phase 2 Simulcast	P25 Phase 2	Trunked

© Tait Limited July 2017

1.7 Theory of Operation

The reciter receives RF signals from its RF input and sends RF from its RF output to the PA, along with a PA key signal. The PA sends an RF feedback signal to the reciter for linearization and power control purposes. The reciter also receives signals from, and sends signals to, the system interface, the Ethernet interface, and the front panel (see Figure 1.4).

A system control bus interconnects the modules and carries alarm and control signaling between the reciter and the other modules (refer to "Intermodule Communications" on page 25 for more details).

The Ethernet interface carries voice over IP and also allows maintainer access via a web browser.

Figure 1.4 Base station high-level diagram

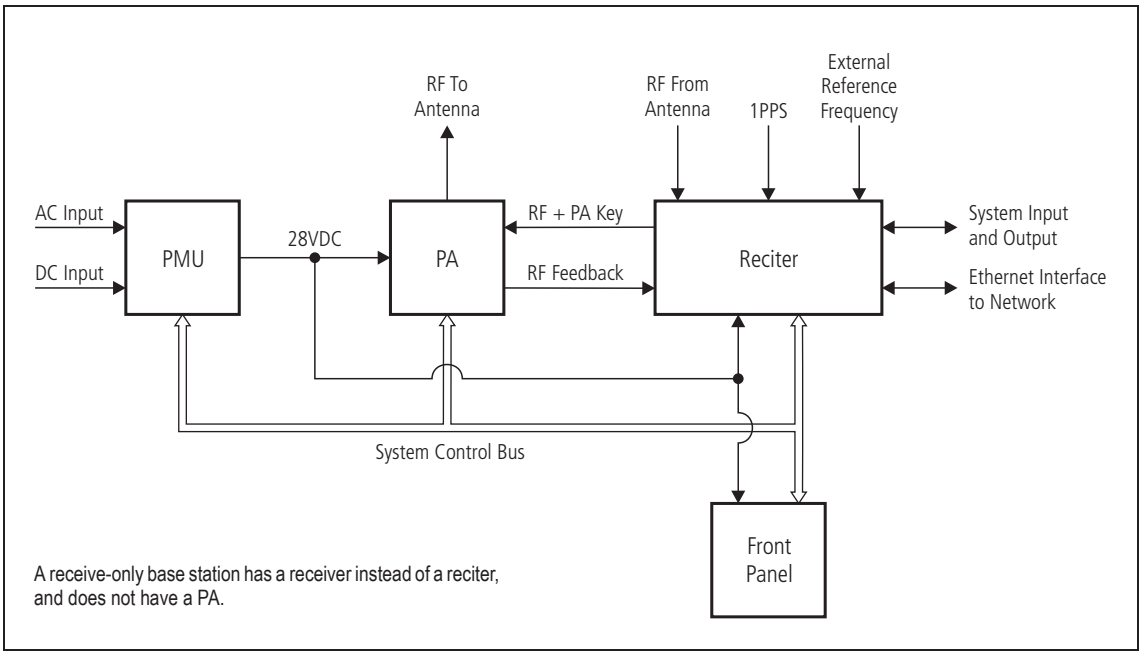

© Tait Limited July 2017

The reciter carries out signal processing and has overall control of the base station. Its circuit boards are shown in Figure 1.5.

Figure 1.5 Reciter boards

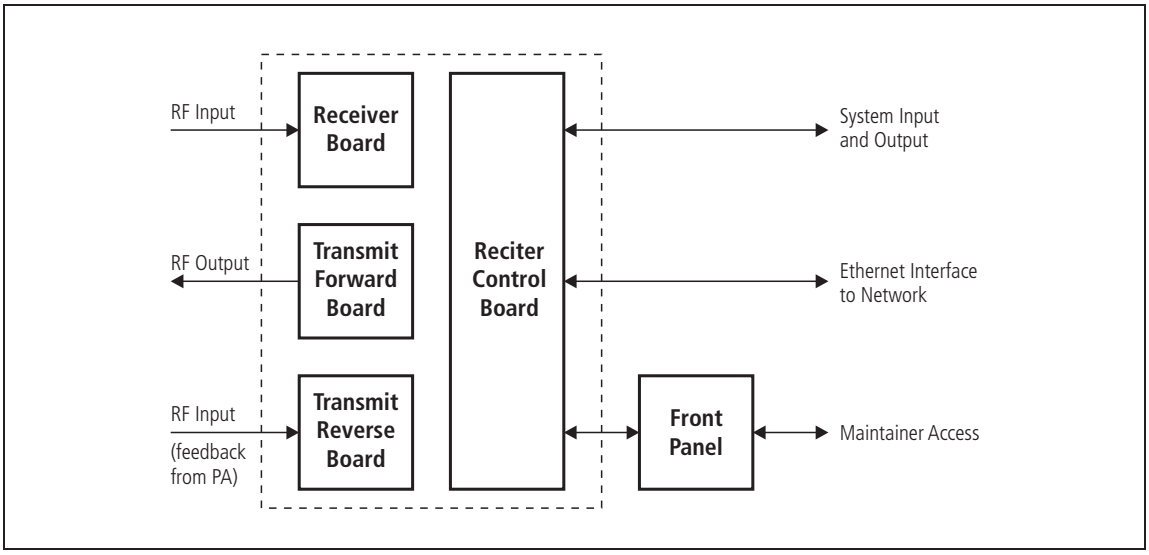

The receiver board contains all the receiver circuitry, while the exciter circuitry is located on the transmit forward board.

The reciter control board converts information between analog and digital and controls the maintainer's access via the front panel. It performs the air interface signal processing for digital P25 operation, gives the base station an identity as a network element, and provides the physical connections for the Ethernet and system interfaces.

1.7.1 Signal Paths

Figure 1.6 gives an overview of signal paths within the reciter.

Figure 1.6 Reciter signal paths

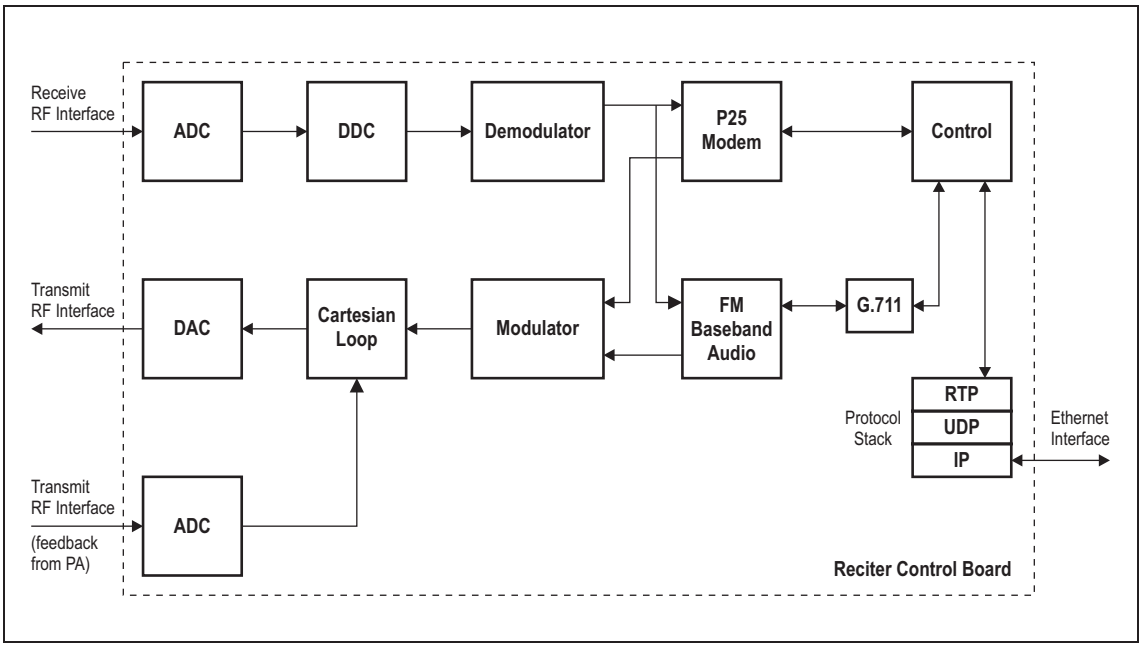

Digital P25 signals from the receive RF interface pass through the digital receiver and P25 modem to the control software in the RISC processor. The control software passes the signal through the Ethernet interface to the site controller (P25 trunked networks), to the console gateway (conventional networks), or for a satellite, to the central voter in a simulcast system.

Input to the Ethernet interface can be from the site controller (P25 trunked networks), from the console gateway (conventional networks), or from the central voter in a simulcast system. These inputs are processed by the RISC and passed through the P25 modem to the transmitter. If the base station is itself a central voter, this input can also be a received signal, which is voted on and sent back through the Ethernet interface to the site controller.

1.7.2 Online and Offline Modes

The base station normally operates in Online mode, but you can put it into Offline mode via its web interface.

Online Mode

In Online mode, the base station performs its normal functions.

Offline Mode

Some procedures, such as activating firmware or running certain diagnostic tests, require the base station to be in Offline mode. This takes the base station out of service. However, the front panel is still operational and can be used in the normal way.

© Tait Limited July 2017

1.7.3 Intermodule Communications

A system control bus and a subrack interconnect board link the modules in the subrack and carry alarm and control signaling between the reciter and the other modules, as shown in Figure 1.7.

Specific configuration settings for dual base stations are described in "Recommended Configuration Settings" on page 59.

Figure 1.7 Intermodule communication paths

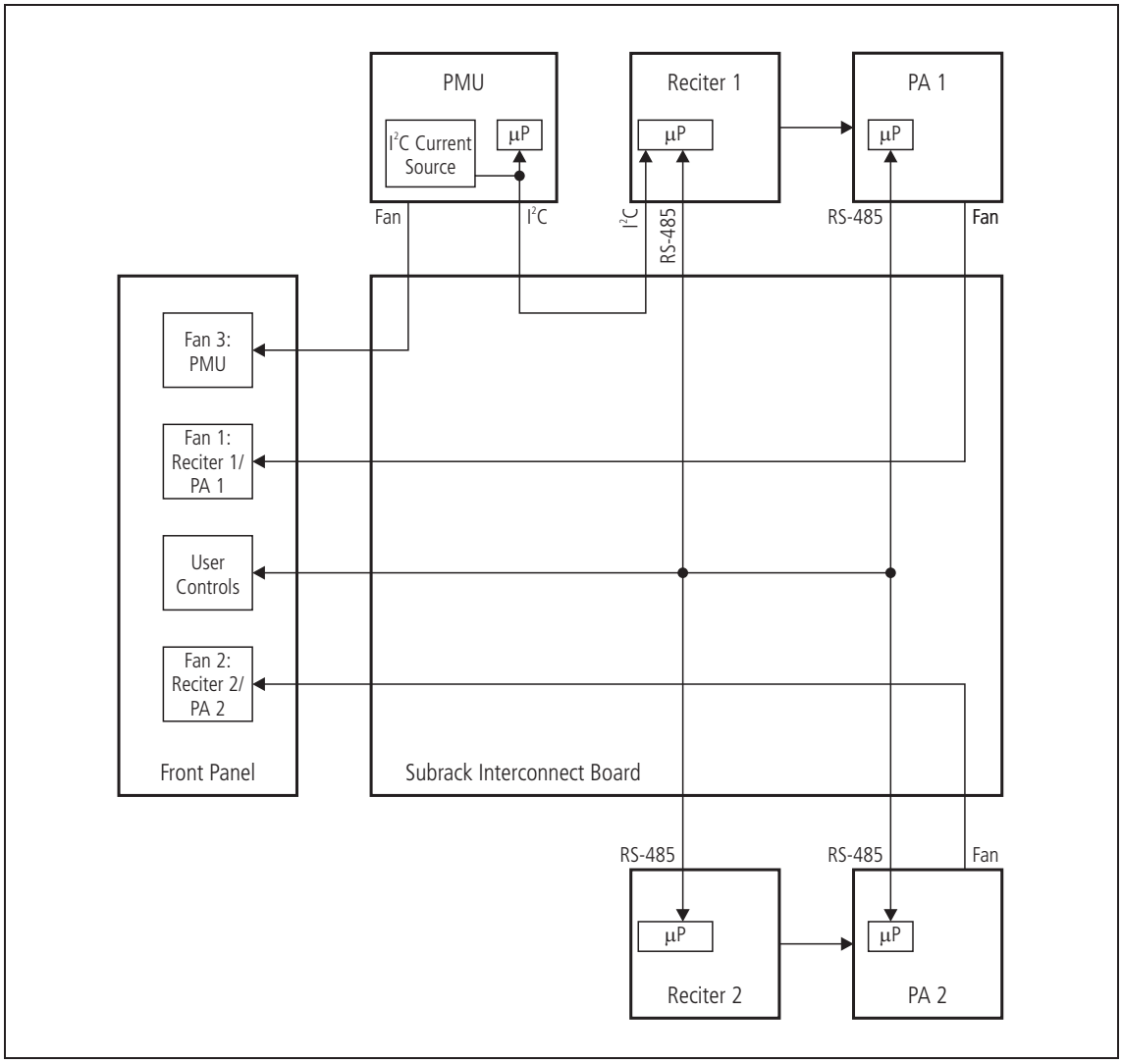

1.7.4 Power Management and Distribution

The PMU manages the supply of power to ensure uninterrupted operation of the base station. A range of parameters is monitored and these can trigger alarms that are sent to the reciter. Alarms can be monitored via the web interface and reported via SNMP traps; they are also recorded in the reciter's internal log file.

AC to DC Changeover

When the PMU has an AC and a DC module, the base station can be powered by either the AC (mains) or the DC (battery) supply. The base station will default to the AC supply if both supplies are provided. If the AC supply becomes unavailable, a seamless changeover from the AC to DC supply takes place, providing that the battery voltage is above the configured minimum startup voltage. You can use a web browser to check whether the base station is running on battery or mains power.

DC Operation

When the base station is running off the DC supply and the battery voltage falls below the configured minimum, the base station will enter battery protection mode to protect the battery and base station equipment. The standby power supply card maintains the power to the PMU microprocessor, while the rest of the PMU is shut down. When the battery voltage rises to the configured startup setting, power is resumed to the DC supply. Refer to "PMU Operation on DC Input" on page 28 for more detailed information.

Auxiliary Power Control

The output from the auxiliary power supply board can be used to power other site equipment. The maximum output is 40 W.

Distribution

Figure 1.8 shows how power is distributed to modules in the subrack. The 28 VDC output from the PMU is fed directly to the PA in a single base station, or directly to PA 1 in a dual base station, and to the other modules via the subrack interconnect board. Power to the reciters and front panel is current-limited by self-resetting fuses on the subrack board.

The AC converter has a series switch which breaks the phase input to the converter. The DC input, however, has much higher current ratings. Its switch does not disconnect power from the DC converter itself, but disables the converter by switching off its control circuitry.

The outputs from both the AC and DC high power converters are added together and fed to the modules via the high-current outputs. The auxiliary output is also tapped off this summed output.

© Tait Limited July 2017

Figure 1.8 Subrack power distribution

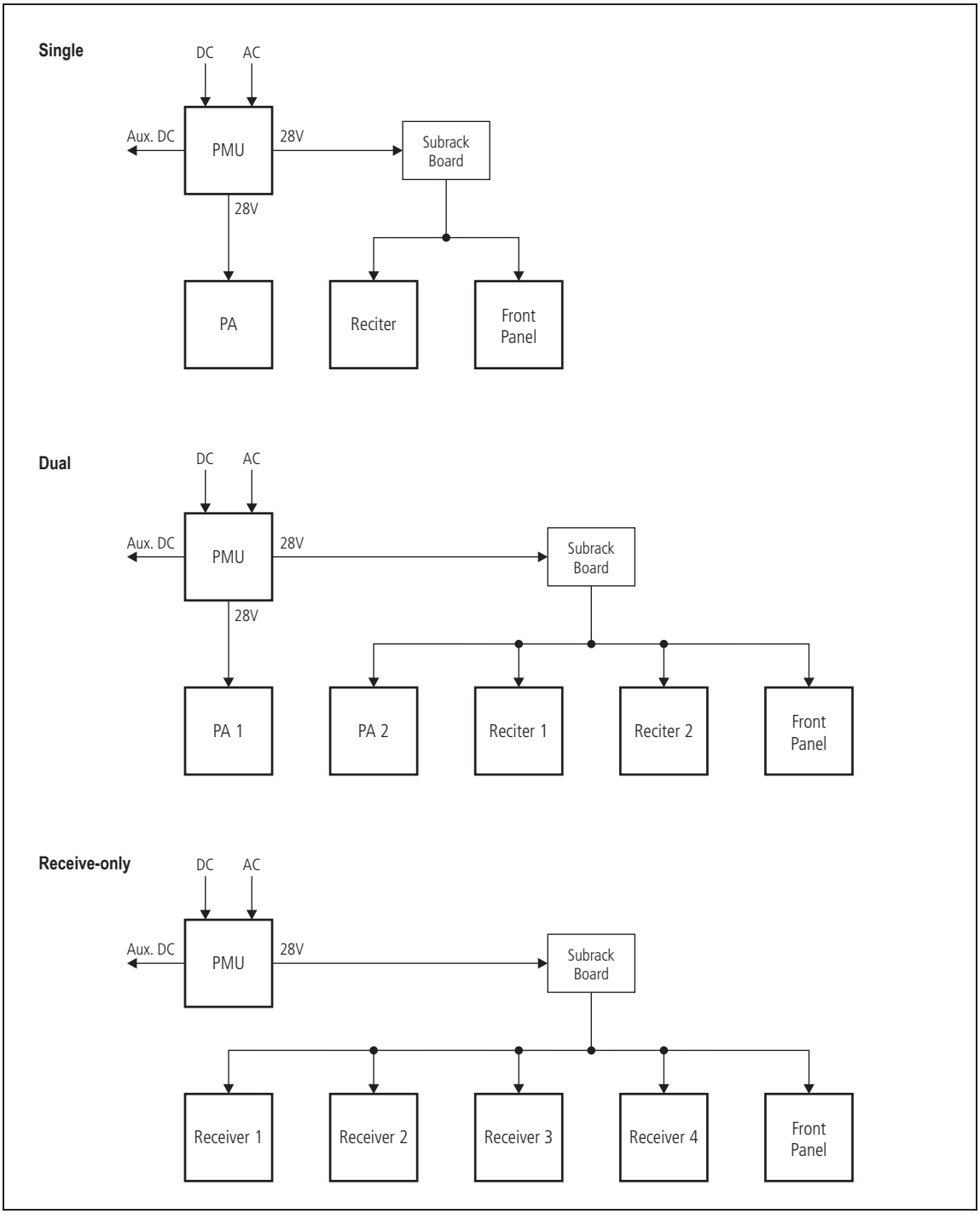

1.7.5 PMU Operation on DC Input

The operation of the PMU on DC input is controlled by three sets of parameters:

- user-programmable alarms
- user-programmable startup and shutdown limits
- battery protection limits

The voltage range for each of these parameters is provided in Table 1.2 on page 29. Figure 1.9 on page 30 illustrates how these parameters interact, and how they control the operation of the PMU over a range of DC input voltages.

Alarms

User-programmable alarms can be set for low or high battery voltage (Configure > Alarms > Thresholds). The alarms will be triggered when the set voltage levels are reached. These limits are subject to the tolerances of the battery protection circuitry, as stated in “Battery Protection (Fail-safe) Limits” in Table 1.2.

Startup and Shutdown Limits

The user-programmable startup and shutdown limits allow for adjustable startup and shutdown voltages (Configure > Base Station > Miscellaneous). These limits can be adjusted for different numbers of battery cells, or for the particular requirements of the base station operation. Once the limits are reached, the PMU will shut down. These limits are subject to the tolerances of the battery protection circuitry, as stated in “Battery Protection (Fail-safe) Limits” in Table 1.2.

> **Notice** It is possible to set the startup voltage of the base station below the nominal voltage of the battery. Continuing to use a battery for extended periods when it is below its nominal voltage will severely shorten its service life. For more information on battery management, we recommend that you consult the battery manufacturer.

Battery Protection Limits

The battery protection limits are set in hardware at the factory, and cannot be adjusted by the user. These limits will not be reached under normal operation conditions, but are provided as “fail-safe” measures to protect the battery from deep discharge. They also remove the need for low-voltage disconnect modules.

© Tait Limited July 2017

Table 1.2 PMU DC voltage limits[a]

Parameter	Voltage Range		
	12V PMU	**24V PMU**	**48V PMU**
User-programmable Alarms[b]			
Low Battery Voltage	10V to 14V	20V to 28V	40V to 56V
High Battery Voltage	14V to 17.5V	28V to 35V	56V to 70V
User-programmable Limits[b]			
Startup Voltage (after shutdown)	10.9V to 15V ±0.3V	21.8V to 30V ±0.5V	43.6V to 60V ±1V
Shutdown Voltage	10V to 13.5V ±0.3V	20V to 27V ±0.5V	40V to 54V ±1V
Battery Protection (Fail-safe) Limits			
Startup Voltage	10.8V ±0.2V	21.6V ±0.5V	43.2V ±1V
Undervoltage Shutdown	9.5V ±0.3V	19V ±0.5V	38V ±1V
Overvoltage Shutdown	18.1V ±0.3V	36.2V ±0.5V	72.4V ±1V
Overvoltage Shutdown Reset	17.1V ±0.3V	34.2V ±0.5V	68.4V ±1V

a. The information in this table is extracted from the Specifications Manual. Refer to the latest issue of this manual for the most up-to-date and complete PMU specifications.

b. Using the base station's web interface.

Figure 1.9 PMU alarm thresholds and voltage limits when operating on DC

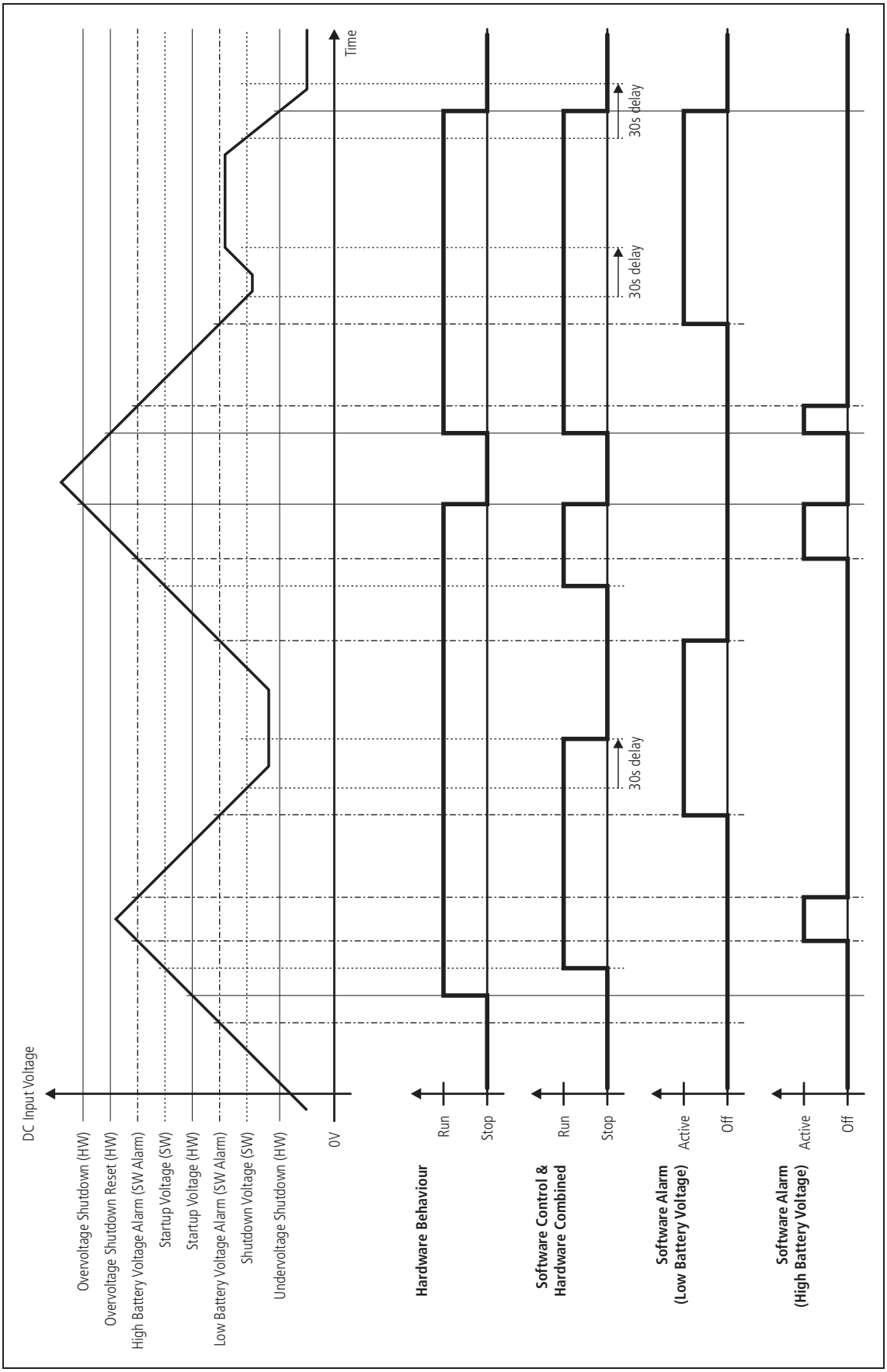

© Tait Limited July 2017

1.7.6 Front Panel Fans

The front panel is equipped with three fans. One fan is for the PMU, and the other two are for the reciter/PA pairs in a 50 W base station, or for the PA and reciter in a 100 W base station, or for the receivers in a receive-only base station (refer to "Appendix C – Identifying Front Panels" on page 121). Front panel fans do not operate continuously, but are switched on and off as needed. The PMU and PA control their own fan. Reciters request the front panel to turn on their fan. The reciter in slot 1can also carry out a fan test on all three fans.

Front panel fans are 3-wire fans (power, ground, and rotation detect). The reciter can monitor whether the fans are rotating and generate an alarm if the fan fails.

The fans turn on for a few seconds when the base station is powered up, and also after the front panel is refitted to a base station which is powered up.

Configuring Fan Control

The operation of the PA fan is configurable via the web interface; you can specify the threshold temperature at which the fan will be turned on, and set the fan to operate only when the PA is transmitting.

The PMU fan has fixed on/off thresholds and a defined set of duty cycles based on the PMU temperature and load current, as described in the following table.

PMU Temperature	Current	Fan Duty Cycle
<149 °F (65 °C)	<4 A 4 A–6 A 6 A–8 A 8 A–12 A 12 A–14 A ≥15 A	always off 2 minutes on, 8 minutes off 2 minutes on, 5 minutes off 3 minutes on, 3 minutes off 4 minutes on, 1 minute off always on
>149 °F (65 °C)	—	always on

© Tait Limited July 2017

2 General Safety and Regulatory Information

This chapter provides general information on safety precautions for operating the base station.

2.1 Personal Safety

2.1.1 Unpacking and Moving the Equipment

To prevent personal injury and equipment damage, we recommend that two people unpack and move the equipment.

Caution A subrack complete with modules can weigh up to 55 lb (25 kg), or up to 62 lb (28 kg) complete with packaging. We recommend that you have another person help you unpack and move the equipment. The TBAA03-16 carrying handles will make it easier to move the equipment once it has been unpacked. If necessary, remove the modules from the subrack before moving it (refer to "Replacing Modules" on page 104). In all cases follow safe lifting practices.

2.1.2 Lethal Voltages

Warning **The PMU contains voltages that may be lethal. Refer to the ratings label on the rear of the module.**

The equipment must be installed so that the rear of the PMU is located in a service access area which is accessible only by qualified personnel. The PMU must be connected to the mains supply source by qualified personnel in accordance with local and national regulations.

Disconnect the mains IEC connector and wait for five minutes for the internal voltages to self-discharge before dismantling. The AC power on/off switch does not isolate the PMU from the mains. It breaks only the phase circuit, not the neutral.

The PMU should be serviced only by qualified technicians. There are no user-replaceable parts inside. If the PMU is damaged and does not function properly, stop the module safely and contact your regional Tait office immediately.

All servicing should be carried out only when the PMU is powered through a mains isolating transformer of sufficient rating.

© Tait Limited July 2017

2.1.3 AC Power Connection

English (en)	The PMU must be connected to a grounded mains socket-outlet.
Norsk (no)	Apparatet må tilkoples jordet stikkontakt.
Suomi (fi)	Laite on liitettävä suojamaadoitus-koskettimilla varustettuun pistorasiaan.
Svenska (sv)	Apparaten skall anslutas till jordat uttag.

2.1.4 Explosive Environments

Warning **Do not operate the equipment near electrical blasting caps or in an explosive atmosphere. Operating the equipment in these environments is a definite safety hazard.**

2.1.5 High Temperatures

Take care when handling a PMU or PA which has been operating recently. Under extreme operating conditions (+140°F [+60°C] ambient air temperature) or high duty cycles, the external surfaces of the PMU and PA can reach temperatures of up to +176°F (+80°C).

2.1.6 LED Safety (EN60825-1)

This equipment contains Class 1 LED Products.

© Tait Limited July 2017

2.1.7 Proximity to RF Transmissions / A proximité des émissions RF

To comply with the RF Field Limits for Devices Used by the General Public for (Uncontrolled Environment)[a], a safe separation distance of at least 12 feet (3.6 metres) from the antenna system should be maintained.

This figure is calculated for a typical installation, employing one 100 W base station transmitter. Other configurations, including installations at multi-transmitter sites, must be installed so that they comply with the relevant RF exposure standards.

a. Reference Standards
   Health Canada's Safety Code 6: *Limits of Human Exposure to Radiofrequency Electromagnetic Energy in the Frequency Range from 3 kHz to 300 GHz*
   USA Federal Communications Commission OET bulletin 65 (47CFR 1.1310)
   IEEE C95.1 2005: *Standard for Safety Levels with Respect to Human Exposure to Radio Frequency Electromagnetic Fields, 3 kHz to 300 GHz*

Pour respecter les limites imposées au champ RF au niveau des équipements utilisés par le grand public (environnement non contrôlé)[a], une distance de séparation de sécurité d'au moins 3.6 mètres du bloc d'antenne devrait être observée.

Ce nombre est calculé pour une installation typique, ayant un émetteur de station de base de 100 W. D'autres configurations, incluant les installations ayant des sites de plusieurs émetteurs, doivent être installées de façon à se conformer aux normes pertinentes des expositions RF.

a. Normes de référence
   Code de sécurité 6 de Santé Canada: *Limites d'exposition humaine à l'énergie électromagnétique radioélectrique dans la gamme de fréquences de 3 kHz à 300 GHz*
   Commission fédérale des communications (FCC) des Etats Unis d'Amérique bulletin OET numéro 65 (47CFR 1.1310)
   IEEE C95.1 2005: *Norme pour les niveaux de sécurité compatibles avec l'exposition des personnes aux champs électromagnétiques de radiofréquence 3 kHz à 300 GHz*

© Tait Limited July 2017

2.2 Equipment Safety

2.2.1 Installation and Servicing Personnel

The equipment should be installed and serviced only by qualified personnel.

2.2.2 Preventing Damage to the PA

The base station has been designed to operate safely under a wide range of antenna loading conditions. Transmitting into a low VSWR will maximize the power delivered to the antenna.

Notice Do not remove the load from the PA while it is transmitting.

Load transients (switching or removing the load) can damage the PA output stage. See "Connecting RF" on page 75 for recommendations.

2.2.3 ESD Precautions

Notice This equipment contains devices which are susceptible to damage from static charges. You must handle these devices carefully and according to the procedures described in the manufacturers' data books.

We recommend you purchase an antistatic bench kit from a reputable manufacturer and install and test it according to the manufacturer's instructions. Figure 2.1 shows a typical antistatic bench set-up.

You can obtain further information on antistatic precautions and the dangers of electrostatic discharge (ESD) from standards such as ANSI/ESD S20.20-1999 or BS EN 100015-4 1994.

Figure 2.1 Typical antistatic bench set-up

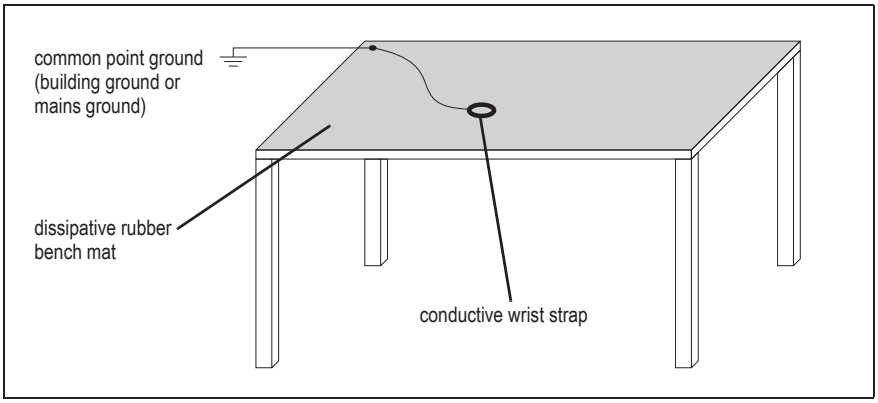

2.2.4 Anti-tampering Devices

All network elements should be physically secured, where possible. This includes the use of locked cabinets and the use of seals on connectors.

All network connectors should be sealed with the stick-on type of seal. The purpose of the seals is to detect unauthorized tampering. The seal should reveal if any of the connectors have been unplugged or if any unauthorized equipment has been plugged in.

The seals must be difficult to remove without breaking, and must bridge between the cable and equipment side (plug and socket) of the connection.

Seals must cover any unused network sockets. This includes the Ethernet connector on the rear panel, any spare switch ports, and the console port on the router and switch.

The seals must be difficult to reproduce. A sticker initialed or signed by the technician should satisfy this.

Seals must be replaced if they need to be disturbed during maintenance.

2.3 Environmental Conditions

2.3.1 Operating Temperature Range

The operating temperature range of the equipment is –22°F to +140°F (–30°C to +60°C) ambient temperature. Ambient temperature is defined as the temperature of the air at the intake to the cooling fans.

2.3.2 Humidity

The humidity should not exceed 95% relative humidity through the specified operating temperature range.

2.3.3 Dust and Dirt

For uncontrolled environments, the level of airborne particulates must not exceed 100 $\mu g/m^3$.

© Tait Limited July 2017

2.4 Regulatory Information

2.4.1 Distress Frequencies

The 406 to 406.1 MHz frequency range is reserved worldwide for use by Distress Beacons. Do **not** program transmitters to operate in this frequency range.

2.4.2 Compliance Standards

This equipment has been tested and approved to various national and international standards. Refer to the latest issue of the Specifications Manual for a complete list of these standards.

2.4.3 FCC Compliance

This equipment complies with:

- CFR Title 47 Part 15 Class B (except PMU):

  Radiated and conducted emissions, and electromagnetic susceptibility specifications of the Federal Communications Commission (FCC) rules for the United States.

  Operation is subject to the following two conditions:

  a. This device may not cause harmful interference, and

  b. This device must accept any interference received, including interference that may cause undesired operation.

- CFR Title 47 Part 15 Class A (PMU only):

  Radiated and conducted emissions, and electromagnetic susceptibility specifications of the Federal Communications Commission (FCC) rules for the United States.

  Operation is subject to the following two conditions:

  a. This device may not cause harmful interference, and

  b. This device must accept any interference received, including interference that may cause undesired operation.

2.4.4 Unauthorized Modifications

Any modifications you make to this equipment which are not authorized by Tait may invalidate your compliance authority's approval to operate the equipment.

The manufacturer is not responsible for any radio or TV interference caused by unauthorized modifications to this equipment. Such modifications could void the user's authority to operate the equipment.

© Tait Limited July 2017

3 Operation

This section describes the user controls and indicator LEDs on the front panel and on the base station modules.

© Tait Limited July 2017

3.1 Front Panel

The user controls and indicator LEDs on the front panel are shown in Figure 3.1. They allow some manual control over the base station and monitoring of its operational status.

Notice If there is more than one reciter in a subrack, inputs from all reciters are summed to drive the front panel LEDs.

Figure 3.1 Operating controls on the control panel

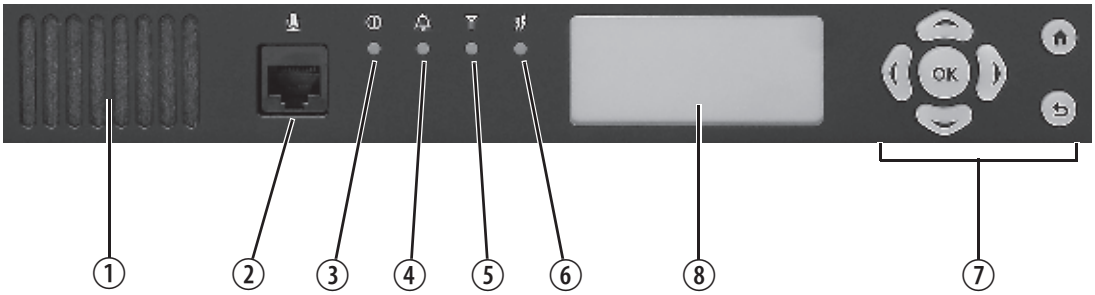

① speaker
② microphone connector
③ power LED
④ alarm LED
⑤ receive LED
⑥ transmit LED
⑦ keypad
⑧ display

① ② **Speaker and Microphone Connector**

The speaker and microphone connector are not used in this release of the base station.

③ **Power LED**

The green power LED is lit when power is supplied to the subrack.

④ **Alarm LED**

The red alarm LED will flash at a rate of 2 to 5 Hz when an alarm has been generated by any of the base station modules. It will continue to flash until the alarm is canceled or the fault is fixed. Note that only those alarms which are enabled using the web interface will cause this LED to flash.

LED	Description
Flashing	One or more faults are present.
On (steady)	A base station is in Offline mode, and no faults are present.
Off	A base station is in Online mode, and no faults are present.

⑤ **Receive LED**

The amber receive LED indicates whether the base station is receiving a valid RF signal (on one or both logical channels in P25 Phase 2 operation).

LED	Description
On (steady)	A base station is receiving a valid RF signal.
Off	A base station is not receiving a valid RF signal.

⑥ **Transmit LED**

The amber transmit LED is lit while the transmitter is transmitting.

⑦ **Keypad**

The keypad is used to navigate the base station's menus, enter text, and to adjust the contrast of the display. The complete list of menu items is provided in "Menu Map" on page 42.

If required, the keypad can be disabled in the web interface to prevent access to the base station via the front panel menus (see "Disabling the Front Panel Keypad" on page 98).

Key	Name	Function
	left and right arrow keys	■ Move the cursor to the left or right when entering text. Moving the cursor beyond the end of a line will return it to the other end of the same line. ■ Decrease or increase the contrast in the Display Contrast screen.
	scroll keys	■ Scroll up and down through a list of menu items. ■ Scroll up and down through the list of available characters when entering text. ■ Increase or decrease the contrast in the Display Contrast screen.
OK	OK	■ Selects the highlighted menu item. ■ Confirms any adjustments made and exits to the previous menu. ■ When setting the IP address, moves the cursor down one line. When all the IP addresses are confirmed, exits to the previous menu.
	home	■ Returns to the home screen from any other menu.
	return	■ Returns to the previous menu. ■ Moves the cursor up one line in the IP address screen. When the top line is reached, pressing again returns to the previous menu.

ⓘ Unlike a computer keyboard, the keys do not auto-repeat. Each action requires a separate key-press.

© Tait Limited July 2017

⑧ **Display**

The display is used in conjunction with the keypad to access the base station's menus. It allows the technician to configure the IP address of each reciter (refer to "Setting the IP Address" on page 83), and to set the contrast of the display (see below).

After the base station is powered up, the display shows "Please wait…" while the base station is starting up, followed by the home screen when the start-up process is complete. The home screen shows four lines of user-defined text, which can be entered via the web interface (Identity > Identity > Base Station Identity).

From the home screen press an arrow key, a scroll key or OK to go to the base station menu. The display returns to the home screen from any other screen 30 seconds after the last key press. Press any key to turn on the backlight. The backlight turns off 30 seconds after the last key press.

ⓘ If the keypad has been disabled, pressing an arrow key, a scroll key or OK will cause the display to show "Keypad Disabled".

Set the display contrast as follows:

1. From the base station menu select Modules > Front Panel > Contrast.
2. To increase the contrast, press the right arrow or scroll up key. To decrease the contrast, press the left arrow or scroll down key.
3. When the contrast is set to the required level, press OK to save the changes and exit the menu.

Menu Map

The menu map below shows the menu items available in this release of the base station.

Notice The menu map shown is for a single base station. The menu items available in your base station will depend on which modules are present in the subrack, and whether the keypad has been disabled (refer to "Disabling the Front Panel Keypad" on page 98).

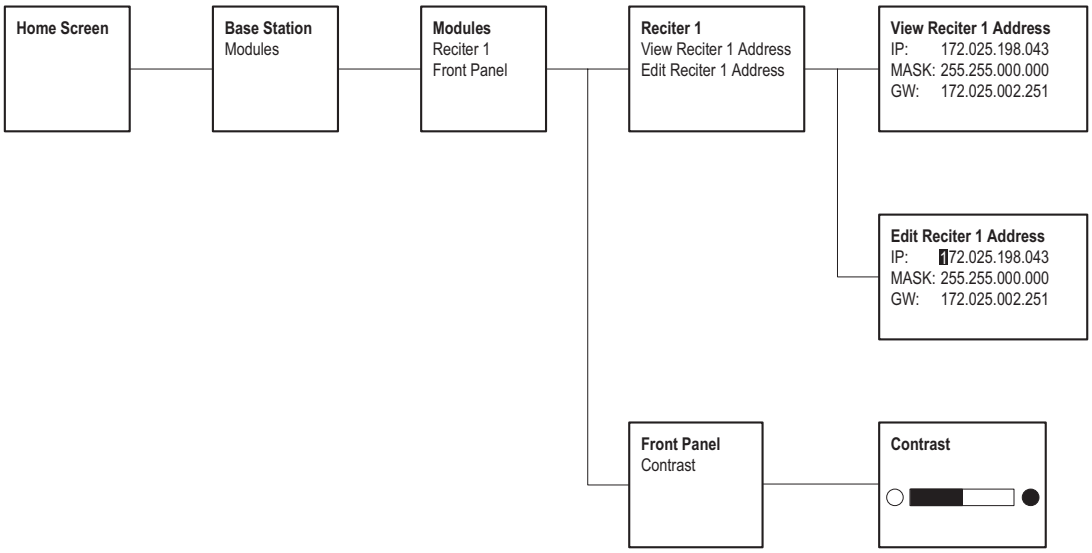

© Tait Limited July 2017

3.2 Module Indicator LEDs and Switches

Additional status information is displayed by LEDs in individual modules. The PMU also has switches that let you turn the AC and DC modules off.

3.2.1 Reciter and Receiver

Front View

The indicator LEDs on the front of the reciter or receiver are visible through a slot in its front panel.

Figure 3.2 Indicator LEDs on the front of the reciter and receiver

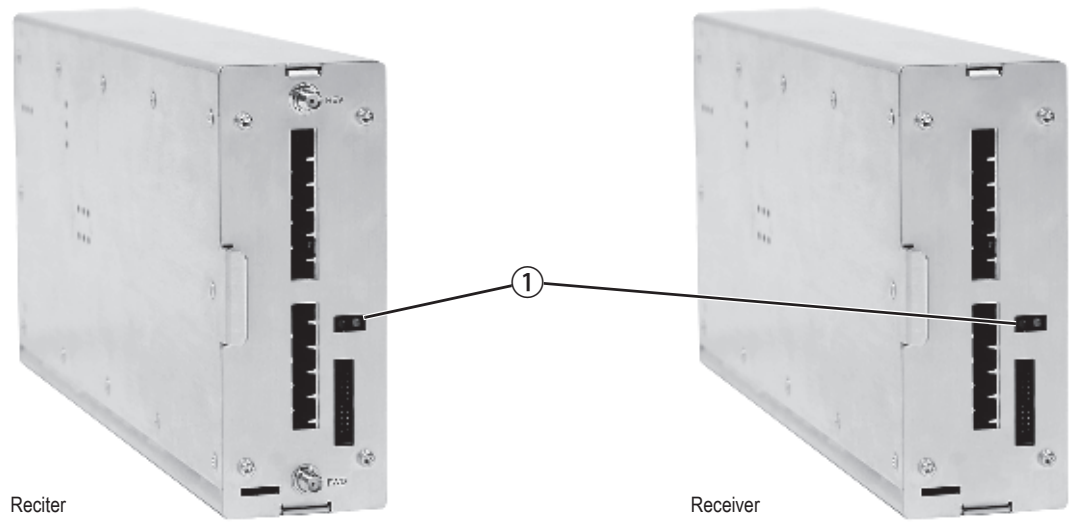

① indicator LEDs

These LEDs provide the following information about the state of the reciter or receiver:

- steady green - the reciter or receiver is powered up
- flashing red - one or more alarms have been generated; you can use the web interface to find out more details about the alarms.

Rear View

The indicator LEDs on the rear of the reciter and receiver are on the Ethernet connector.

Figure 3.3 Indicator LEDs on the rear of the reciter and receiver

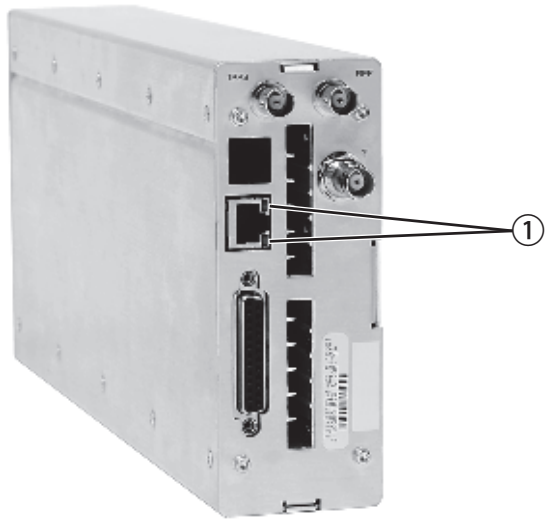

① indicator LEDs

These LEDs provide the following information about the state of the reciter and receiver:

- steady amber - the Ethernet interface is connected
- flashing green - data is being transmitted across the Ethernet interface.

© Tait Limited July 2017

3.2.2 PA

The indicator LEDs on the PA are visible through a slot in its front panel.

Figure 3.4 Indicator LEDs on the PA

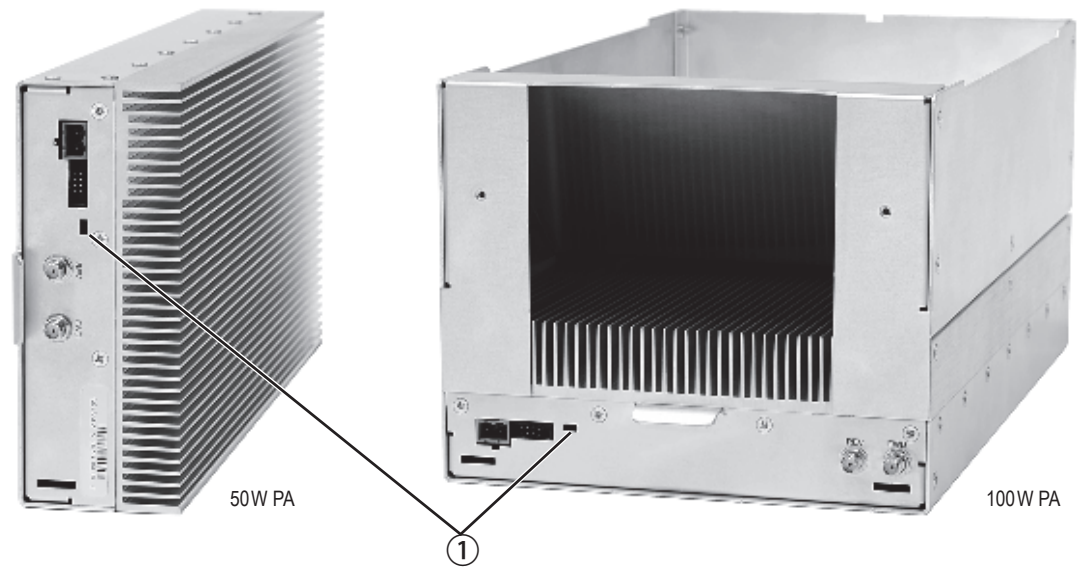

① indicator LEDs

Indicator LEDs

These LEDs provide the following information about the state of the PA:

- steady green - the PA is powered up
- flashing green - the PA has no application firmware loaded or activated; you can use the web interface to download or activate the firmware; also see "Preparing to Download Firmware" on page 98
- flashing red - one or more alarms have been generated; you can use the web interface to find out more details about the alarms.

ⓘ The alarm LED will flash whenever an alarm is generated, whether or not this alarm has been disabled via the web interface.

3.2.3 PMU

The only controls on the PMU are the on/off switches on the rear panel for the AC and DC modules, and the indicator LEDs visible through a slot in its front panel.

Figure 3.5 Operating controls on the PMU

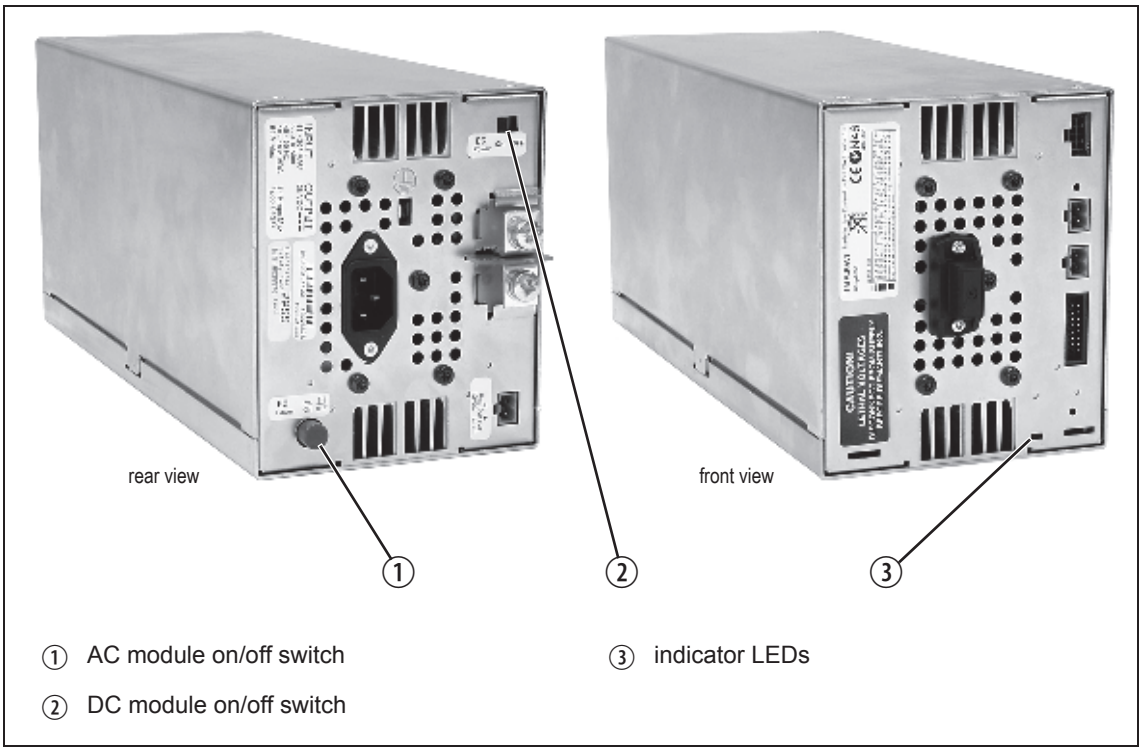

Warning **The AC and DC module on/off switches do not totally isolate the internal circuitry of the PMU from the AC or DC power supplies. You must disconnect the AC and DC supplies from the PMU before dismantling or carrying out any maintenance. Refer to the service manual for the correct servicing procedures.**

AC Module On/Off Switch

This switch turns the AC input to the PMU on and off. Note that this switch breaks only the phase circuit, not the neutral.

The red button remains “out” whether on or off.

DC Module On/Off Switch

This switch turns the DC output from the PMU on and off. Note that this switch does not disconnect power from the DC converter itself. It disables the converter by switching off its control circuitry. Even when the DC converter is off, the DC input is still connected to its power circuitry.

The switch is recessed to prevent the DC module being accidentally switched off.

© Tait Limited July 2017

Indicator LEDs

These LEDs provide the following information about the state of the PMU:

- steady green - the PMU is powered up
- flashing green - the PMU has no application firmware loaded or activated; you can use the web interface to download or activate the firmware; also see "Preparing to Download Firmware" on page 98
- flashing red - one or more alarms have been generated; you can use the web interface to find out more details about the alarms
- flashing red and green - the PMU is in battery protection mode; check that the battery voltage is above the configured minimum startup voltage; also check that the minimum startup voltage is configured correctly.

ⓘ The alarm LED will flash whenever an alarm is generated, whether or not this alarm has been disabled via the web interface.

4 Installation

This chapter provides information on the site requirements for your TB9400 equipment and also describes how to install the base station in a standard 19 inch rack or cabinet.

If this is your first time installing a TB9400 base station, we recommend that you read the entire chapter before beginning the actual installation.

© Tait Limited July 2017

4.1 Before You Begin

4.1.1 Equipment Security

The security of your base station equipment is a high priority. If the site is not fully secure, the base station should at least be locked in a secure, ventilated cabinet to prevent unauthorized access.

4.1.2 Grounding and Lightning Protection

Electrical Ground

The base station modules are grounded by physical contact between the module case and the subrack. To ensure a good ground connection you must tighten each module retaining clamp securely (refer to "Final Reassembly" on page 115 for the correct torque).

A threaded grounding connector is provided on the rear of the subrack for connection to the site ground point (refer to "Connecting Up the Base Station" on page 71 for more details).

Lightning Ground

It is extremely important for the security of the site and its equipment that you take adequate precautions against lightning strike. Because it is outside the scope of this manual to provide comprehensive information on this subject, we recommend that you conform to your country's standards organization or regulatory body.

4.1.3 Equipment Ventilation

Always ensure there is adequate ventilation around the base station (refer to "Cabinet and Rack Ventilation" on page 50).

Notice **Do not** operate it in a sealed cabinet. You **must** keep the ambient temperature within the specified range, and we **strongly** recommended that you ensure that the cooling airflow is not restricted.

Notice The cooling fans are mounted on the front panel and will only operate when the panel is fitted correctly to the front of the subrack. To ensure adequate airflow through the base station, do not operate it for more than a few minutes with the front panel removed (e.g. for servicing purposes).

4.1.4 Ambient Temperature Sensor

The ambient temperature reading for the base station is provided by the temperature sensor located on the front panel circuit board.

© Tait Limited July 2017

4.1.5 Cabinet and Rack Ventilation

The cooling airflow for the subrack enters through the front panel and exits at the rear. For optimum thermal performance, the heated air that passes through a base station must never be allowed to re-enter the air intakes on the front panel. Any space at the front of the cabinet not occupied by equipment should be covered by a blanking panel. Refer to Figure 4.1 on page 51.

Equipment installation should observe the following guidelines:

- The recommended maximum number of subracks in a 38U cabinet is five as shown in Figure 4.1 on page 51.
- Any space at the front of the cabinet not occupied by equipment should be covered by a blanking panel. Refer to Figure 4.1 on page 51.
- Subrack placement in the cabinet should include a 2U gap at the top of the cabinet.
- To allow enough cooling airflow through a cabinet-mounted base station, the cabinet should allow for 50 cu.ft/min for each subrack (0.024 cu.m/s).
- To ensure adequate ventilation, the cabinet should have a vent at the top with an area of approximately 23 in^2 (150 cm^2) per subrack, or a similar area of ventilation per subrack at the rear of the cabinet behind each subrack.
- The maximum ambient temperature at the base station front panels must not exceed +140°F (+60°C).

© Tait Limited July 2017

Figure 4.1 Typical cabinet ventilation requirements

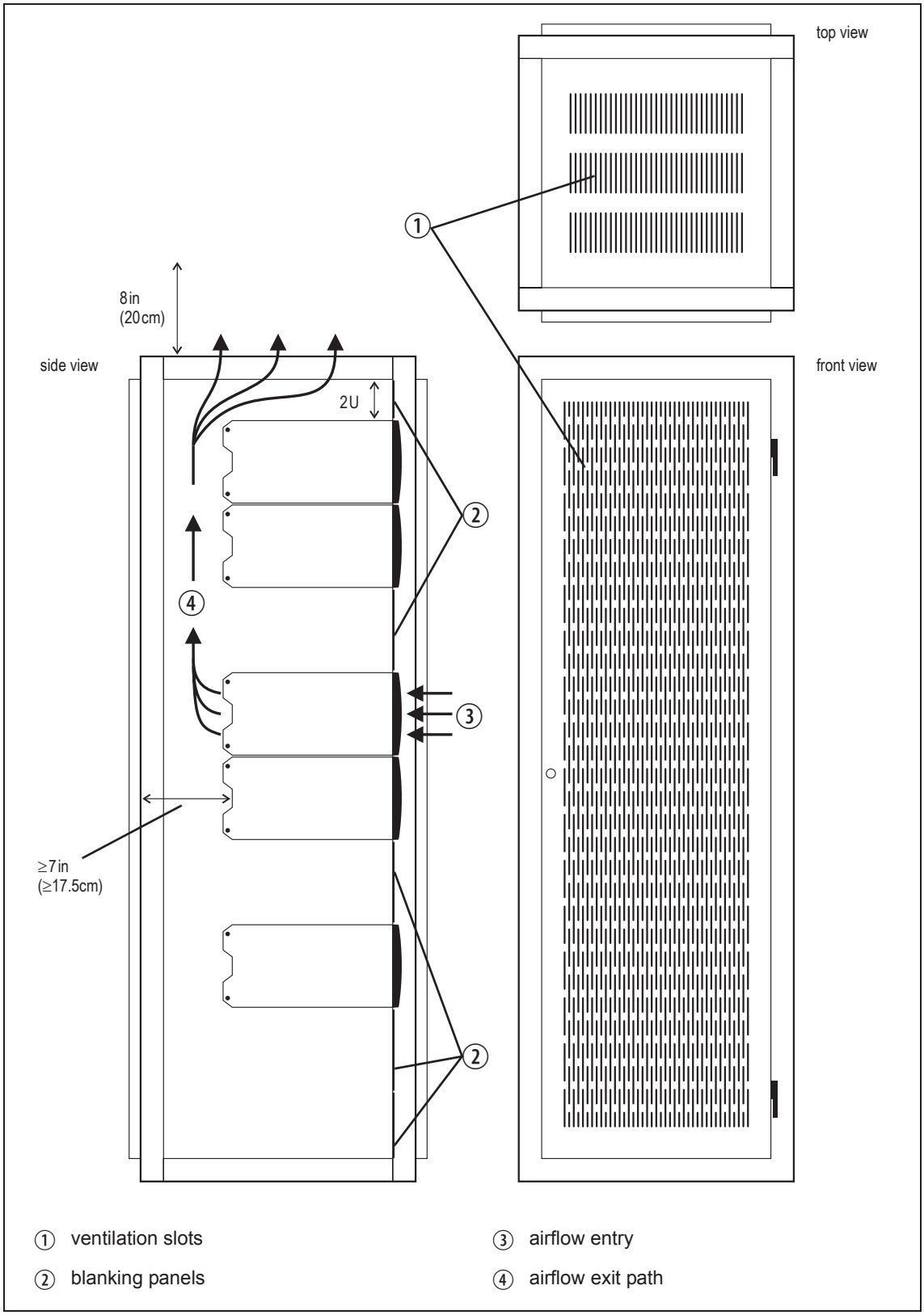

4.2 Unpacking and Moving the Subrack

The subrack is packed in a strong corrugated cardboard carton with top and bottom foam cushions. To prevent personal injury and damage to the equipment, we recommend that two people unpack and move the subrack. To remove the subrack from the carton, follow the procedure illustrated in Figure 4.2.

Caution A subrack complete with modules can weigh up to 55 lb (25 kg), or up to 62 lb (28 kg) complete with packaging. We recommend that you have another person help you unpack and move the equipment. The TBAA03-16 carrying handles will make it easier to move the equipment once it has been unpacked. If necessary, remove the modules from the subrack before moving it (refer to "Replacing Modules" on page 104). In all cases follow safe lifting practices.

Figure 4.2 Unpacking the subrack

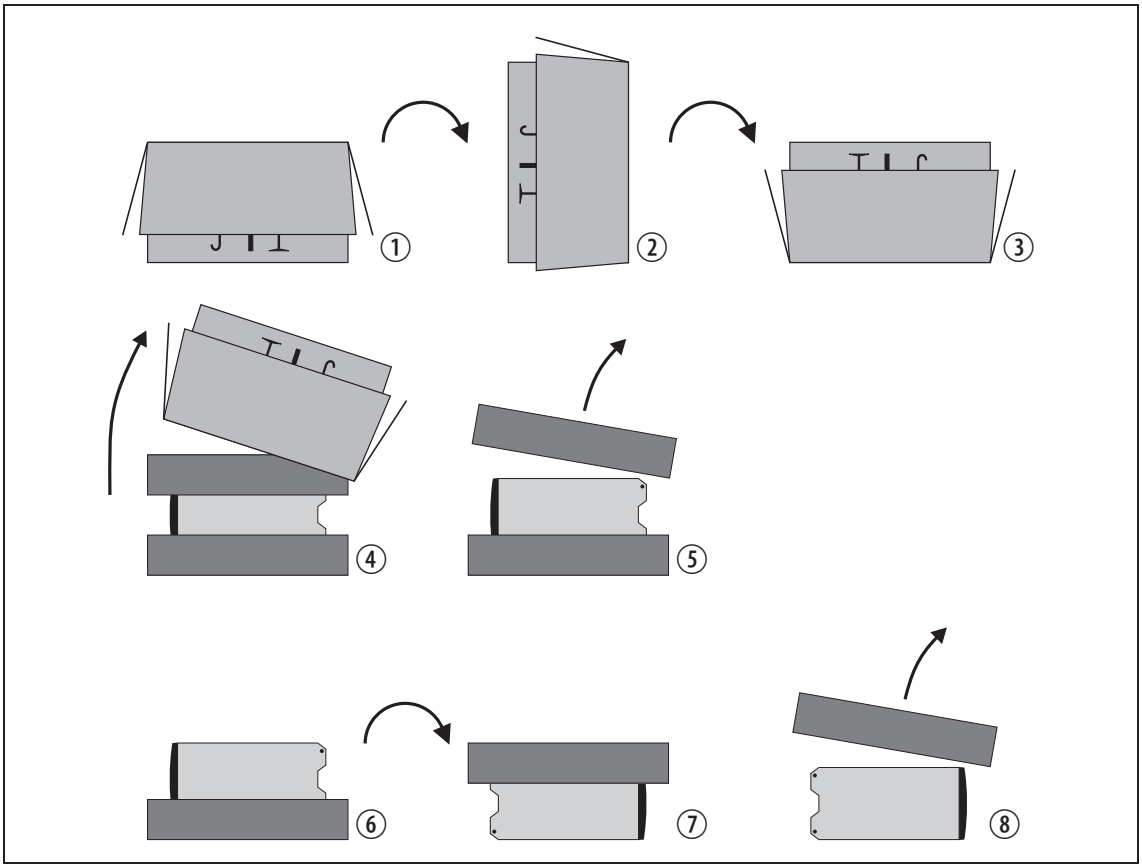

1. Cut the tape securing the flaps at the top of the carton and fold them flat against the sides ①.
2. Rotate the carton carefully onto its side ② and then onto its top ③, ensuring that none of the flaps is trapped underneath.

© Tait Limited July 2017

3. Slide the carton upwards over the foam cushions and lift it away ④. Remove the cushion from the bottom of the subrack ⑤.

4. Rotate the subrack and cushion carefully over the rear of the subrack ⑥ so that it is the right way up with the cushion on top ⑦. Remove the cushion from the top of the subrack ⑧.

Disposal of Packaging

If you do not need to keep the packaging, we recommend that you recycle it according to your local recycling methods. The foam cushions are CFC- and HCFC-free and may be burnt in a suitable waste-to-energy combustion facility, or compacted in landfill.

© Tait Limited July 2017

4.3 Identifying the Equipment

You can identify the model and hardware configuration of the TB9400 modules by referring to the product code printed on labels at the rear of each module. The meaning of each character in the product code is explained in the tables below.

This explanation of product codes is not intended to suggest that any combination of features is necessarily available in any one product. Consult your regional Tait office for more information regarding the availability of specific models and options.

Reciter and Receiver Product Codes

Product Code	Description	
T01-0110**X**-XXXX	3 = reciter 4 = receiver[a]	
T01-0110X-**X**XXX	**Frequency Band** D = 148 MHz to 174 MHz K = 400 MHz to 440 MHz L = 440 MHz to 480 MHz M =470 MHz to 520 MHz N = 762 MHz to 870 MHz[b]	**Tait Band Identifier** B3 band H1 band H2 band H3 band K4 band
T01-0110X-X**X**XX	A = standard	
T01-0110X-XX**X**X	A = default	
T01-0110X-XXX**X**	A = default	

a. Receive-only base stations are currently available for operation only on B3, H1, H2, H3 and K4 bands.

b. The actual frequency coverage in this band is:
Transmit: 762MHz to 776MHz and 850MHz to 870MHz
Receive: 792MHz to 824MHz

PA Product Codes

Product Code	Description	
T01-01121-**X**XXX	**Frequency Band** D = 148 MHz to 174 MHz K = 400 MHz to 440 MHz L = 440 MHz to 480 MHz M =470 MHz to 520 MHz N = 762 MHz to 870 MHz[a]	**Tait Band Identifier** B3 band H1 band H2 band H3 band K4 band
T01-01121-X**X**XX	A = 50 W B = 100 W	
T01-01121-XX**X**X	A = default	
T01-01121-XXX**X**	A = default	

a. The actual frequency coverage in this band when used with a K-band TB9400 reciter is 762MHz to 776MHz and 850MHZ to 870MHz.

© Tait Limited July 2017

PMU Product Codes

Product Code	Description
TBA**X**XXX-XXXX	3 = PMU
TBA3**X**XX-XXXX	0 = default
TBA3X**X**X-XXXX	0 = AC module not fitted A = AC module fitted
TBA3XX**X**-XXXX	0 = DC module not fitted 1 = 12V DC module fitted 2 = 24V DC module fitted 4 = 48V DC module fitted
TBA3XXX-**X**XXX	0 = standby power supply card not fitted 1 = 12VDC standby power supply card fitted 2 = 24VDC standby power supply card fitted 4 = 48VDC standby power supply card fitted
TBA3XXX-X**X**XX	0 = auxiliary power supply board not fitted 1 = 12VDC auxiliary power supply board fitted 2 = 24VDC auxiliary power supply board fitted 4 = 48VDC auxiliary power supply board fitted
TBA3XXX-XX**X**X	0 = default
TBA3XXX-XXX**X**	0 = default

© Tait Limited July 2017

4.4 Initial Setting Up

Before putting the base station into service, you may want to carry out some basic functional testing, configuration, and tuning (if required). This section provides an overview of these procedures:

- checking that the base station powers up correctly
- checking the basic functionality of the base station by using the tests available in the web interface
- customizing the configuration for the intended installation and verifying that the configuration is correct
- changing the root password
- tuning the base station (if required).

4.4.1 Confirming Operation

Notice Make sure that the RF output is connected to a suitable attenuator or dummy load. Do not remove the load while the PA is transmitting as this may damage the PA output stage.

Applying Power

1. Apply power by turning on the PMU.
2. Check that the base station powers up correctly:
   - The front panel display will show “Please wait...” while the base station starts up (this may take up to two minutes). When the startup process is complete, the display will show the home screen.
   - The cooling fans in the front panel will run at full speed for a few seconds, then run at low speed while the base station starts up, and then assume standard operation. One or more fans may operate, depending on the temperature of the modules.

© Tait Limited July 2017

Functional Tests

The following table provides an overview of the tests available using the web interface. Refer to the Help for full details of these tests.

Test	Notes	Menu
receiver operation	requires a suitable RF source	Diagnose > RF Interface > Receiver
transmitter operation	requires connection to the network	Diagnose > RF Interface > Transmitter
synchronized transmit	checks the simulcast operation of a channel group or the transmitters in it	Diagnose > RF Interface > Synchronized Transmit
ping	checks the IP connection to another device with an IP address	Diagnose > Connection > Network
NTP query	checks if the NTP-based time synchronization is working	
PMU mains failure	requires a DC backup supply	Diagnose > Subsystems > PMU Control Tests
fan operation	checks the operation of each fan individually	Diagnose > Subsystems > Fan Tests

© Tait Limited July 2017

4.4.2 Working with Configurations

The Web UI page Tools > Files > Configuration allows you to manage your base station configuration.

You can:

- Back up a configuration. This stores a snapshot of the base station's current configuration. It is advisable to back up the current configuration before making significant configuration changes.
- Upload a configuration. This copies a configuration from your computer to the base station. You can develop a master configuration and upload it to all the base stations in the network.
- Download a configuration. This sends a copy of the selected configuration to your computer so that you can store it.
- Restore a configuration. This activates the selected configuration after rendering it compatible with the current software. You can restore configurations that have been backed up on the base station.

Users should be aware that the following parameters are **not** restored on a base station when a configuration is restored:

- Keypad enabled
- Receiver number
- Host name
- Default channel
- Operating mode
- Front panel test lines 1 through 4
- IP address
- Subnet mask
- Gateway address
- Link speed

© Tait Limited July 2017

4.4.3 Customizing the Configuration

The following steps provide an overview of the process used to configure the base station with the settings it needs. Refer to the Help for detailed information.

1. Log in to the base station (refer to "Connecting Your PC to the Base Station" on page 81 for more details).

2. Select Configure. The base station has many different settings that can be configured before it is put into operation, such as:
   - channel configurations
   - alarm control and SNMP agent
   - network interfaces
   - channel groups and quality of service
   - channel and signaling profiles
   - CWID
   - miscellaneous items such as minimum battery voltages, fan control, NTP and package servers.

3. Make the changes needed in each form and click **Save**. All changes made in the form will be applied when, and only when, the form is saved.

Notice Before making changes, you should save the configuration to your PC or network. This provides a baseline which can be restored to the base station if the configuration information becomes lost or corrupted.
You should also back up the configuration before downgrading to a different software release. Note that if you downgrade and then upgrade software, configuration values for new features may become default.

4.4.4 Recommended Configuration Settings

In a dual base station only base station 1 communicates directly with the PMU and front panel. Therefore the following configuration settings are recommended for dual base station operation:

- Disable the "PMU not detected" alarm on base station 2 (Configure > Alarms > Control > PMU).
- Disable the "FP not detected" alarm on base station 2 (Configure > Alarms > Control > Front panel).

4.4.5 Restricted Port Numbers

Certain configuration settings in the base station's web interface require you to enter a port number (for example, the trunking interface and channel groups).

© Tait Limited July 2017

Two ranges of port numbers are unavailable for use with the base station. The web interface will prevent you from entering a number from these ranges, as explained below.

Restricted Port Numbers	Details
0 – 1023	The “well-known ports”, commonly used by other devices in a network. Using a port number in this range could cause compatibility problems with other devices.
12000 – 14999	Reserved for internal use in the base station. Using a port number in this range could cause the base station to malfunction.

4.4.6 Changing the Root Password

Notice The following procedure can be carried out only if secure shell access (SSH) is enabled. Secure shell access to the base station is disabled by default from version 1.40 onwards. To enable SSH, select Tools > Settings > Secure shell and click **Start**.

The root password to the Linux operating system of the reciter is a possible security risk. The equipment is delivered with a default password that is well known. Knowledge of the password could be used to render the equipment inoperable, for example by deleting files. If you are concerned about the security risk that this poses, change the password. If Tait provides support services, they may need to know the password.

Notice If you change the password and then lose it, the equipment must be returned to Tait. Make sure that you store the password securely and do not lose it.

To change the root password, follow these steps.

1. Log in from your PC to the base station using SSH client software such as PuTTY. The username is “root” and the default password is “k1w1”.
2. At the # prompt, enter the command “passwd”.
3. Follow the on-screen instructions.
4. Record the password in a secure location.

Tait networks are deployed with default weak passwords. For security, Tait strongly recommends changing the default password where applicable.

© Tait Limited July 2017

4.4.7 Tuning the Reciter and Receiver

In this section “reciter” also applies to the receiver module (receive-only reciter).

B-Band

Before the base station is installed on site, you may need to tune the receiver front end. The receiver front end requires tuning if the receive frequency is shifted more than 2 MHz away from the previously set frequency, or the RSSI level of the new frequency is more than 1 dB lower than the RSSI level of the previously set frequency.

The receiver in the B3-band reciter covers the 148 to 174 MHz frequency band. This is split into two sub-bands: 148 to 159 MHz and 159 to 174 MHz.

Each sub-band has its own helical filter (shown in Figure 4.3 below) which is electronically switched in or out of circuit depending on the frequency programmed into the reciter. The bandwidth of these helical filters is approximately ± 1.5 MHz.

Figure 4.3 Identifying the B-band receiver front end helical filters

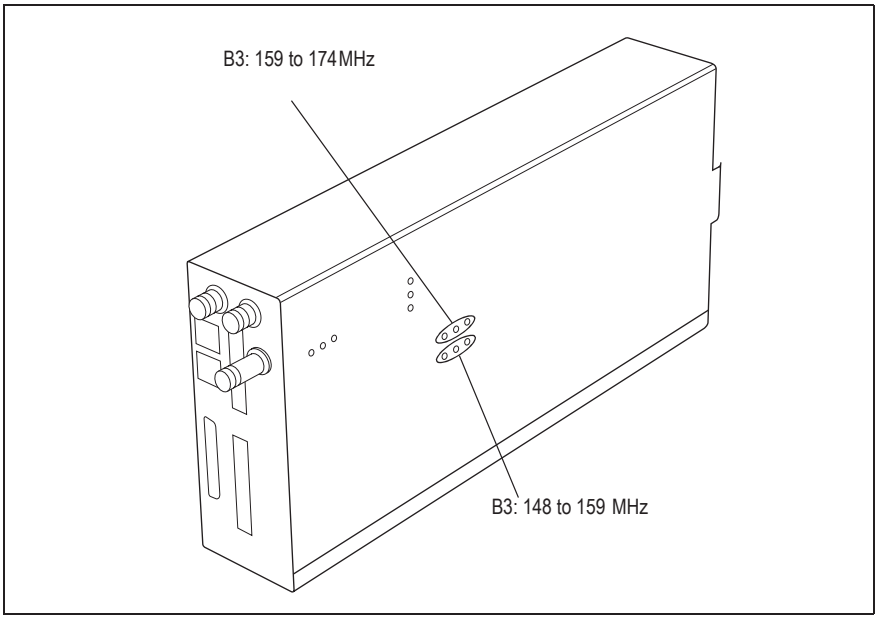

© Tait Limited July 2017

To check the RSSI level and tune the receiver front end (if required), follow these steps:

1. Remove the reciter from the subrack and reconnect the system control bus cable to power up the module.

Tait can provide extender cables (TBC Reciter Power Cables) to enable tuning with a subrack or from a bench power supply. To order these, the part number is T01-01150-0001.

2. Log in to the reciter and select Monitor > Interfaces > RF Interface. For information on connecting directly to the reciter, refer to "Connecting a Networked PC to a Base Station" on page 85.

3. Feed a signal at the currently tuned receive frequency and at a level of –80 dBm into the reciter's RF input. Check that the RSSI reading on the RF Interface page is –80 dBm ± 1 dB. Note this reading.

4. Set the reciter to the new receive frequency.

5. Change the RF input signal to the new receive frequency at –80 dBm. Check that the RSSI reading is –80 dBm ± 1 dB. If it is, the receiver front end does not require tuning. If it is not, go to the next step.

6. Using the Johanson tuning tool[1], adjust the correct helical filter for the new frequency (as shown in Figure 4.3) to obtain a peak RSSI reading. This reading should be within 1 dB of the reading at the previous frequency.

   Adjust the center resonator of the filter first, followed by the two outer resonators (in any order). Each resonator should require approximately the same amount of adjustment when tuning.

A change in frequency of 5 MHz requires approximately one turn of the tuning slug. If tuning to a lower frequency, adjust the slug in (clockwise); for a higher frequency, adjust the slug out (counterclockwise).

7. Change the RF input signal and the reciter's receive frequency to 0.5 MHz above and below the required frequency and check that the RSSI reading does not drop by more than 0.5 dB from the reading at the required frequency.

8. Recalibrate the RSSI at the new frequency (Calibrate > Reciter > RSSI).

If you wish to confirm the accuracy of the tuning procedure, carry out a sensitivity measurement at the new frequency.

1. Included in the TBA0ST2 tool kit. Also available separately as part number 937-00013-00.

© Tait Limited July 2017

H-Band

Before the base station is installed on site, you may need to tune the receiver front end. The receiver front end requires tuning if the receive frequency is shifted more than 5 MHz away from the previously set frequency, or the RSSI level of the new frequency is more than 1 dB lower than the RSSI level of the previously set frequency.

Tait can provide extender cables (TBC Reciter Power Cables) to enable tuning with a subrack or from a bench power supply. To order these, the part number is T01-01150-0001.

The receiver in the H-band reciter covers one of the following frequency sub-bands, depending on the model:

- H1 - 400 to 440 MHz
- H2 - 440 to 480 MHz
- H3 - 470 to 520 MHz

Each sub-band uses the same helical filter (shown in Figure 4.4 below). The bandwidth of the helical filter is approximately ±5 MHz.

Figure 4.4 Identifying the H-band receiver front end helical filter

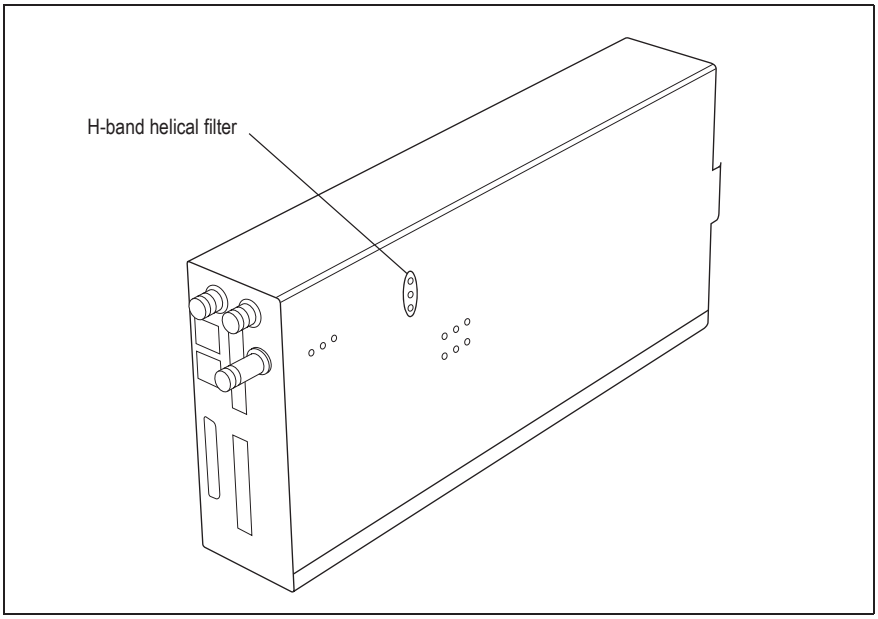

To check the RSSI level and tune the receiver front end (if required), follow these steps.

1. Remove the reciter from the subrack and reconnect the system control bus cable to power up the reciter.
2. Log in to the reciter and select Monitor > Interfaces > RF Interface. For information on connecting directly to the reciter, refer to "Connecting a Networked PC to a Base Station" on page 85.
3. Feed a signal at the currently tuned receive frequency and at a level of −80 dBm into the reciter's RF input. Check that the RSSI reading on the RF Interface page is −80 dBm ±1 dB. Note this reading.

4. Set the reciter to the new receive frequency.

5. Change the RF input signal to the new receive frequency at –80 dBm. Check that the RSSI reading is –80 dBm ± 1 dB. If it is, the receiver front end does not require tuning. If it is not, go to the next step.

6. Using the Johanson tuning tool[1], adjust the helical filter for the new frequency (as shown in Figure 4.4) to obtain a peak RSSI reading. This reading should be within 1 dB of the reading at the previous frequency.

   Adjust the center resonator of the filter first, followed by the two outer resonators (in any order). Each resonator should require approximately the same amount of adjustment when tuning.

ⓘ If tuning to a lower frequency, adjust the slug in (clockwise); for a higher frequency, adjust the slug out (counterclockwise).

7. Change the RF input signal and the reciter's receive frequency to 2 MHz above and below the required frequency and check that the RSSI reading does not drop by more than 0.5 dB from the reading at the required frequency.

8. Re-calibrate the RSSI at the new frequency (Calibrate > Reciter > RSSI).

ⓘ If you wish to confirm the accuracy of the tuning procedure, carry out a sensitivity measurement at the new frequency.

K-Band

The K-band reciter does not require tuning.

1. Included in the TBA0ST2 tool kit. Also available separately as part number 937-00013-00.

© Tait Limited July 2017

4.5 Installing the Base Station on Site

4.5.1 General Installation Advice

When installing base stations, it is very important to observe good site engineering rules. This is especially true when the channels are combined into a single antenna.

If at all possible, the RF planner should avoid frequency plans in which the Rx to Tx spacing is an exact multiple of the trunked channel spacing, thus forcing Tx intermodulation products to fall outside the Rx channels.

Cables and antennas should be of high quality construction. Solid shield heliax type cables are best, but if braided shield cables must be used for short distances, their braids must be silver-plated.

When the outputs of more than one transmitter are combined, their voltages add, and the resulting peak envelope power is not simply the sum of their powers, but is equal to the power of one of them multiplied by the square of the number of sources. Cables, components, and hardware must be rated to withstand the peak envelope power.

During the commissioning process, all transmitters should be activated together using a diagnostic test tone, while the receiver RSSI is monitored. There should be no perceptible increase in RSSI while the transmitters are active.

Base stations may require an external frequency reference, a 1 PPS signal, and an NTP source, depending on the frequency band and type of radio system.

The following general rules apply:

- Base stations operating at or above 700 MHz require an external frequency reference to meet the frequency accuracy requirements for transmitters and receivers.
- Simulcast transmitters require an external frequency reference and a 1 PPS signal so that transmissions can be timed with the required accuracy. They also require an NTP source. Both the 1PPS and NTP signals must be derived from a source that is GPS-disciplined. This will ensure a common timestamp in logs across all units in the system.
- P25 Phase 2 base stations require an external frequency reference and a 1 PPS signal for site alignment of transmitters and receivers. They also require an NTP source to ensure correct, long-term Phase 2 alignment.

The requirements for P25 Phase 1 systems are described in more detail below. Also see “Connecting an External Frequency Reference” on page 76 and “Connecting a 1 PPS Source” on page 77.

P25 Phase 1

The requirements for an external frequency reference and a 1 PPS signal are set out in the following table.

		Transmit and Receive		Receive Only	
Band	**System**	**External Reference**	**1 PPS**	**External Reference**	**1 PPS**
B band H band	Non-simulcast	✘	✘	✘	✘
	Simulcast	✔	✔	✘	✘
K band	Non-simulcast	✔	✘	✔	✘
	Simulcast	✔	✔	✔	✘

An NTP source is also strongly recommended for P25 Phase 1 non-simulcast systems. This will ensure log timestamps are synchronized, which will assist the diagnosis of faults.

Synchronization requirements are more stringent with the introduction of simulcast and with TDMA in Phase 2. See Technical Note TN-2411a Providing Synchronization to Tait Networks.

4.5.2 Equipment Required

It is beyond the scope of this manual to list every piece of equipment that an installation technician should carry. However, the following tools are specifically required for installing the base station:

- Pozidriv PZ3 screwdriver for the M6 screws used in the DC input terminals on the PMU; M6 (0.25 in) screws are also used to secure the subrack to the cabinet in factory-assembled systems
- Pozidriv PZ2 screwdriver for the M4 screws used to secure the module retaining clamps, and for the fasteners used to secure the front panel to the subrack
- 8 mm AF spanner for the SMA connectors, and the subrack ground connector.

You can also obtain the TBA0ST2 tool kit from your regional Tait office. It contains the basic tools needed to install, tune, and service the base station.

© Tait Limited July 2017

4.5.3 Mounting the Subrack

Caution A subrack complete with modules can weigh up to 55 lb (25 kg), or up to 62 lb (28 kg) complete with packaging. We recommend that you have another person help you unpack and move the equipment. The TBAA03-16 carrying handles will make it easier to move the equipment once it has been unpacked. If necessary, remove the modules from the subrack before moving it (refer to "Replacing Modules" on page 104). In all cases follow safe lifting practices.

Figure 4.5 Subrack mounting points

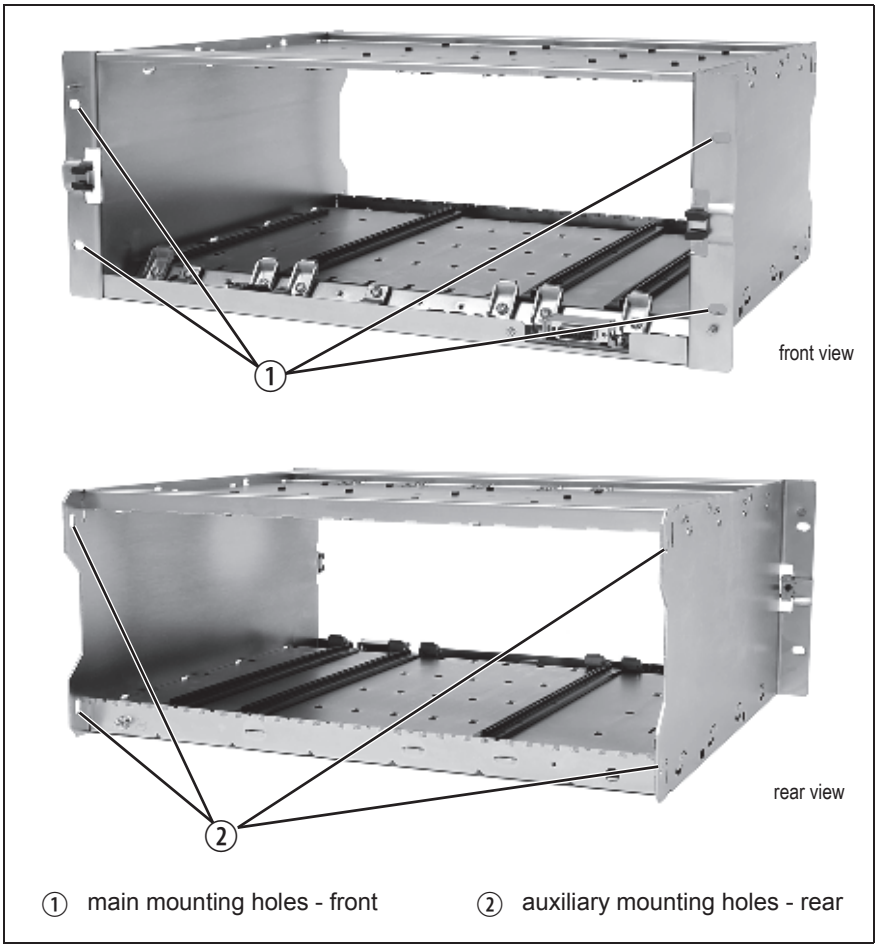

1. Remove the front panel, as described in "Preliminary Disassembly" on page 106.

2. Fit the subrack into the cabinet or rack and secure it firmly with an M6 (0.25 in) screw, flat and spring washer in each of the four main mounting holes ①, as shown in Figure 4.5.

If you need extra mounting security, additional mounting holes ② are provided at the rear of the subrack for auxiliary support brackets.

Figure 4.6 below gives the dimensions of the subrack and its mounting holes.

Figure 4.6 Subrack dimensions

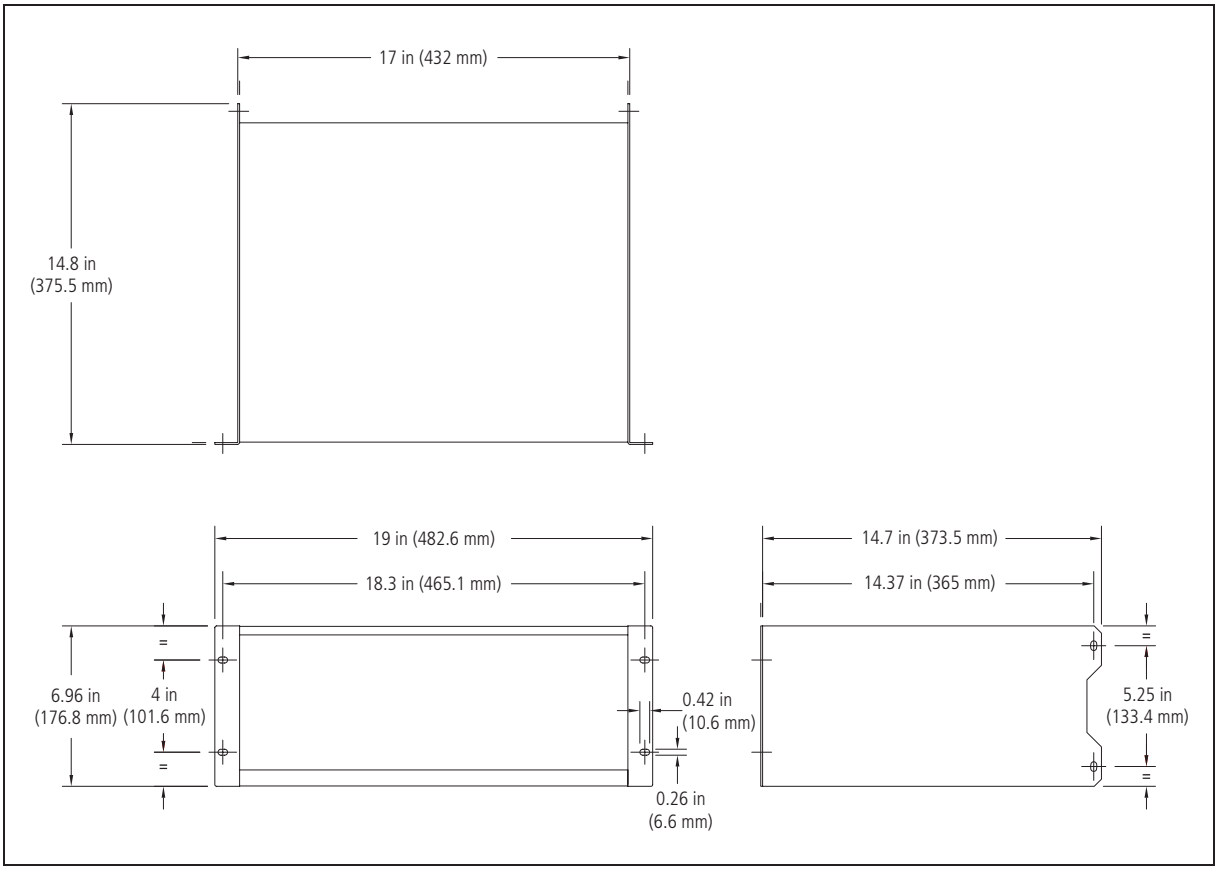

© Tait Limited July 2017

Auxiliary Support Bracket

TBAA03-13 auxiliary support brackets can be fitted to the rear of the subrack to provide additional mounting security. Figure 4.7 shows a standard TBAA03-13 bracket ① fitted in a typical Tait cabinet ②. If you are not using the Tait cabinet, you may have to make your own brackets to suit your installation.

Figure 4.7 Auxiliary support bracket

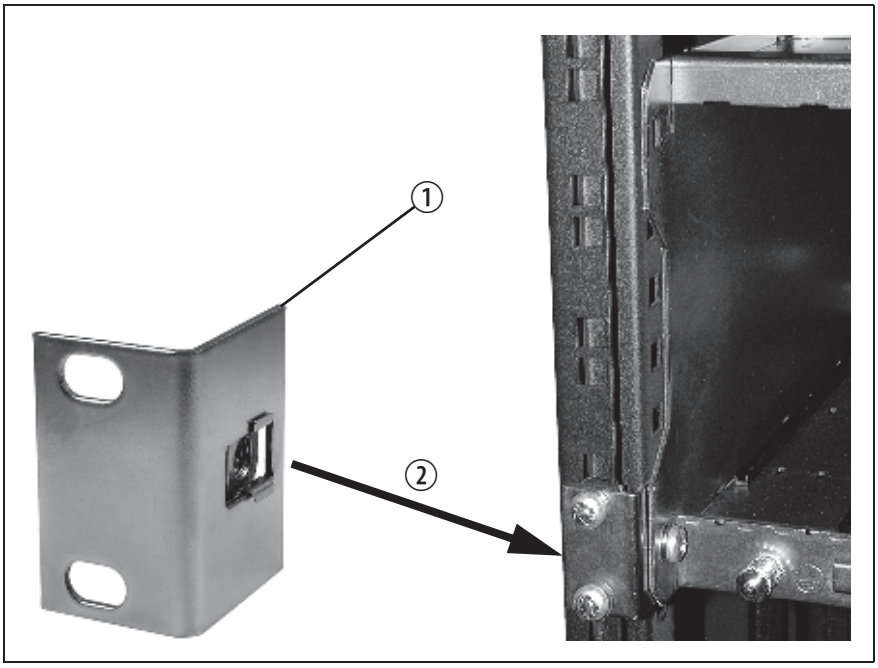

Notice You **must** fit the auxiliary support brackets if you intend to transport a cabinet fitted with a fully built-up base station.

We also recommend that you fit the brackets under the following conditions:

- when the installation is in an area prone to earthquakes
- when third party equipment is installed hard up underneath the base station subrack.

General Cabling

We recommend that you try to route all cables to and from the base station along the side of the cabinet so the cooling airflow is not restricted.

DC Power Cabling

DC power cables should be well supported so that the terminals on the PMU and on the ends of the cables do not have to support the full weight of the cables.

Figure 4.8 shows two recommended methods of securing these cables to prevent straining either set of terminals.

We recommend that you fit the supplied covers to the DC terminals to protect against accidental shorts.

Figure 4.8 DC power cabling

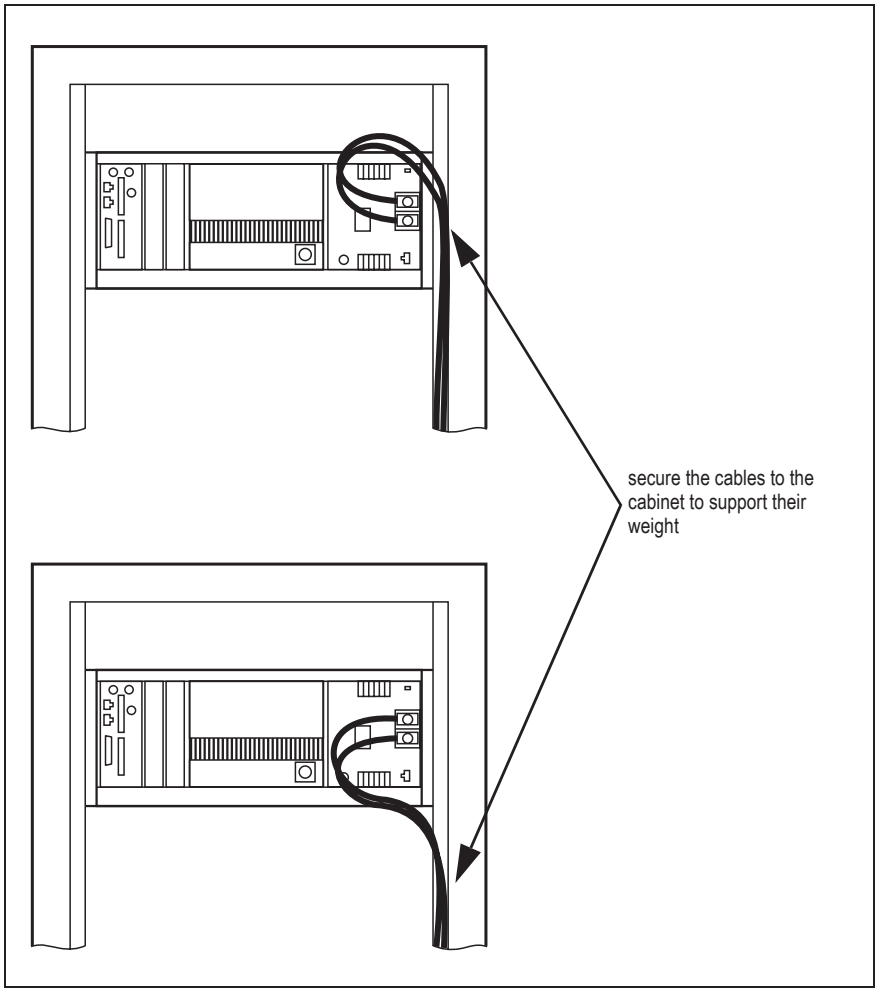

© Tait Limited July 2017

4.6 Connecting Up the Base Station

This section provides information relevant to the task of connecting up the various inputs and outputs of the base station.

4.6.1 Connection Overview

The connections at the rear of a 100 W base station are identified in Figure 4.9. External connections are all located at the rear of the subrack.

Figure 4.9 100 W base station inputs and outputs

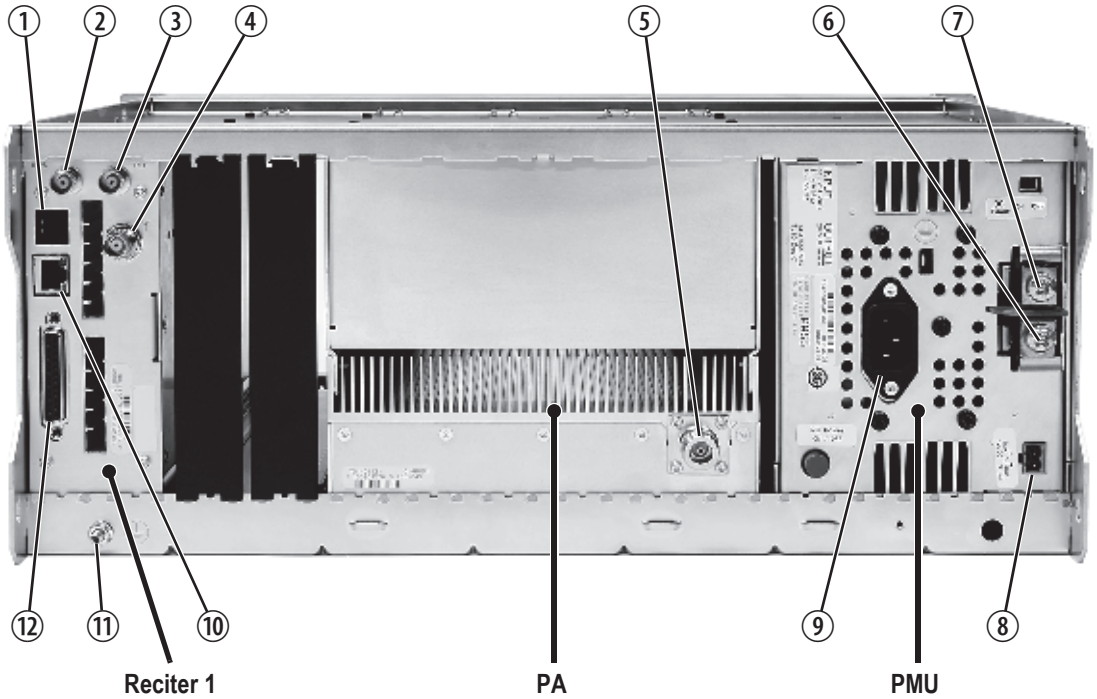

① serial RS-232 connector[a]
② 1 PPS input
③ external reference frequency input
④ RF input
⑤ RF output
⑥ –VDC input
⑦ +VDC input
⑧ auxiliary DC output
⑨ AC mains input
⑩ Ethernet interface connector
⑪ subrack ground connector
⑫ system interface connector

a. Factory use only.

4.6.2 Connecting AC Power

The PMU is designed to accept a mains input of 88 to 264 VAC at 45 to 65 Hz. A standard 3-wire grounded socket outlet must be used to supply the AC power. The socket outlet must be installed near the equipment and must be easily accessible. This outlet should be connected to an AC power supply capable of providing at least 600 W. The requirements of two typical AC supplies are given in the following table.

Nominal Supply	Current Requirement[a]	Circuit Breaker/Fuse Rating[a]
115 VAC	8 A	10 A
230 VAC	4 A	6 A

a. The actual current consumption of the base station will be lower than these requirements (refer to the Specifications Manual for more information).

Your base station should come supplied with a power supply cord to connect the male IEC connector on the PMU to the local AC supply. The pins of the IEC connector on the PMU are identified at right.

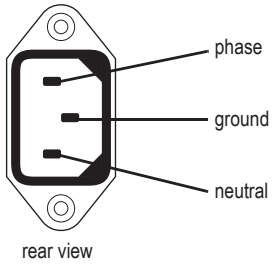

© Tait Limited July 2017

4.6.3 Connecting DC Power

The PMU is designed to accept a nominal 12 VDC, 24 VDC or 48 VDC input (depending on the model) with negative or positive ground. There is a minimum DC startup threshold to prevent damaging a battery which has little capacity left.

You must connect the DC supply from the battery to the PMU via a fuse or DC-rated circuit breaker with the appropriate rating, as shown in the table below. The circuit breaker must have a contact separation of 3 mm, an interrupt capacity of 1000 A or more, and an inrush current capability of at least 500 A for a minimum of 3.5 ms.

Notice The inrush current is not affected by the state of the DC module on/off switch on the PMU. This switch does not disconnect power from the DC converter itself. It disables the converter by switching off its control circuitry. Even when the DC converter is off, the DC input is still connected to its power circuitry.

The DC input leads should be of a suitable gauge to ensure less than 3% voltage drop at maximum load over the required length of lead.

Nominal Supply Voltage	Input Voltage Range	Circuit Breaker/ Fuse Rating[a]	Recommended Wire Gauge[b]
12 VDC	10 VDC to 16.8 VDC	60 A	2 AWG / 35 mm^2
24 VDC	20 VDC to 33.6 VDC	30 A	5 AWG / 16 mm^2
48 VDC	40 VDC to 60 VDC	15 A	8 AWG / 8 mm^2

a. The actual current consumption of the base station will be lower than these requirements (refer to the Specifications Manual for more information).

b. For a length of 5 ft to 6.5 ft (1.5 m to 2 m) (typical).

Terminate and insulate the DC input leads to protect them from accidentally shorting to the subrack if the PMU is removed before the leads are disconnected. Protective covers for the DC terminals are supplied with each PMU. We recommend a screw torque of 18–20 lbf · in (2–2.25 N · m).

© Tait Limited July 2017

4.6.4 Connecting the Auxiliary DC Power Output

The PMU can provide an auxiliary DC output from the auxiliary power supply board. This board is available with an output of 13.65 VDC, 27.3 VDC, or 54.6 VDC (depending on the model), and is current limited to 3 A, 1.5 A or 750 mA respectively. This power supply is permanently on as soon as the base station has finished powering up, and is available on the auxiliary output connector on the rear panel.

You can connect multiple auxiliary power supply boards in parallel for redundancy purposes, or to provide an output greater than 40 W. Although no active current sharing is used, auxiliary boards connected in parallel will current-share before reaching their power limit. The failure (or switching off) of one auxiliary board will not load any other paralleled auxiliary boards in the circuit.

The auxiliary power supply turns off briefly when the PMU restarts after a firmware upgrade. This interruption may also cause any ancillary equipment powered from the auxiliary supply to restart. If this is a problem for your system, we recommend connecting auxiliary power supply boards in parallel to ensure an uninterrupted power supply for the ancillary equipment.

Auxiliary DC Power Output Cabling

Network elements are supplied with a connector, as shown in Figure 4.10. You can use this to connect the PMU's auxiliary DC power output to another device (refer to "PMU Auxiliary DC Output" on page 116 for the pin allocations).

Contact your regional Tait office for details on the full range of wiring kits available.

Figure 4.10 Auxiliary DC power connector

Phoenix MVSTBR2.5HC/2-ST/5.08 female

© Tait Limited July 2017

4.6.5 Connecting RF

Notice Do not remove the load from the PA while it is transmitting as this may damage the PA output stage. Before disconnecting any RF cables, put the base station into Offline mode to prevent any transmissions.

The RF input to the base station is via the marked BNC connector on the rear panel of the reciter. The RF output is via the N-type connector on the rear panel of the PA (refer to Figure 4.9 on page 71).

Cables and antennas should be of high quality construction. Solid shield heliax type cables are best, but if braided shield cables must be used for short distances, their braids must be silver-plated.

Recommendations for Installing the PA

We recommend the following installation procedures, which should protect the PA from damage under all but the most extreme operating conditions.

1. Do not connect the PA directly to the antenna. Fit an isolator or duplexer between the PA and the load. Fit the isolator as close as possible to the RF output connector on the PA. Do not connect any switching equipment between the isolator and the PA, unless the switch **cannot** operate while there is RF present (i.e. the base station is transmitting).
2. Fit a surge suppressor to the antenna cabling where it enters the building.
3. Inspect all cables and equipment connected to the base station for defects.

Ice on the antenna, or a broken antenna, is unlikely to cause damage to the PA.

Explanation

The circuit design of the PA protects the circuitry from high VSWR. This makes it difficult to damage the RF power device by keying the PA into a mismatched load, or if the load deteriorates over even a short period of time (milliseconds).

However, it is possible to damage the device if **all** the following conditions happen **at the same time**:

- there is a step change in the PA load (for example, the load is removed)
- the PA is transmitting
- the feed line loss between the PA and the mismatch is <1 dB.

The effect of such conditions is variable: some devices will not be destroyed, and some may fail after repeated load interruptions.

© Tait Limited July 2017

4.6.6 Connecting an External Frequency Reference

For K4 band, the internal frequency reference accuracy is inadequate, and an external reference **must** be used. An external reference is also required for simulcast and P25 Phase 2. The external reference frequency can be 10 MHz or 12.8 MHz, with an input level of 300 mV_{pp} to 5 V_{pp}. The reciter automatically detects the frequency of the external reference and configures itself accordingly. The stability of this reference should be as shown below.

For more details, see Technical Note TN-2411a Providing Synchronization to Tait Networks.

Multicast	P25 Phase 1 P25 Phase 1	B and H bands K4 band	not required 100 parts per billion
	P25 Phase 2	All bands	100 parts per billion
Simulcast	P25 Phase 1 P25 Phase 2	All bands	10 parts per billion

If an external reference is required, enable the external reference “Absent” alarm (Configure > Alarms > Control).

Use a 50 Ω coaxial cable (RG58 or RG223) to connect the external reference to the base station’s external reference frequency input. You can daisy-chain up to eight base stations using F-junctions. The maximum overall cable length is 30 m. Terminate the last connection (including single base stations) with a 50 Ω load.

Figure 4.11 Daisy-chaining an external frequency reference input

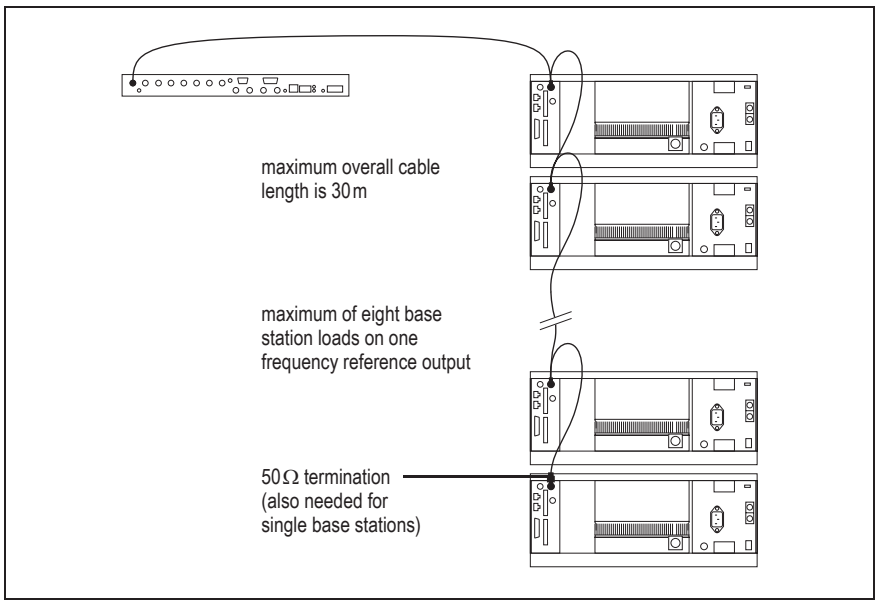

© Tait Limited July 2017

4.6.7 Connecting a 1 PPS Source

A 1 PPS signal is required for simulcast and P25 Phase 2 base stations. Use a 50Ω coaxial cable (RG58 or RG223) to connect the source to the base station's 1 PPS input. You can daisy-chain up to eight base stations using F-junctions. We recommend that the cable length between the first and last load is kept to a minimum. This will reduce any propagation variation between base stations. The maximum overall cable length is 30 m. Terminate the last connection (including single base stations) with a 50Ω resistor, otherwise reflections of the 1 PPS pulse may occur.

Notice For P25 Phase 2 operation the NTP signal must be linked to the 1PPS signal. To ensure synchronization, both signals must come from a source that is GPS-disciplined.

Figure 4.12 Daisy-chaining a 1 PPS input

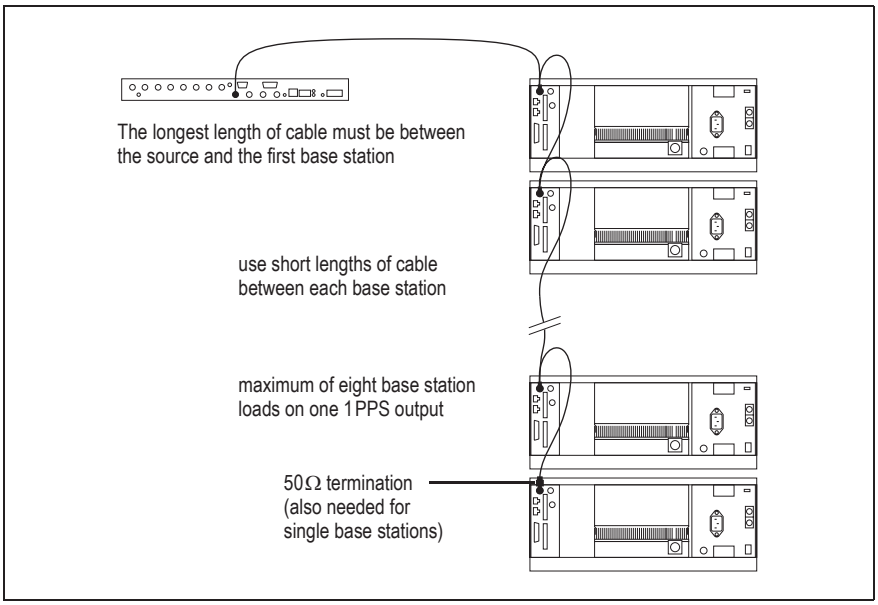

4.6.8 Ethernet Connection

The RJ-45 socket on the reciter's rear panel provides the 1-BASE-T or 100BASE-T Ethernet connection to the other devices in the network. Use a Cat-5 cable to connect this socket to the Tait Network via a router or switch.

The Web UI allows you to set the Ethernet port speed auto-negotiation to 10/100 Mbit/s or to negotiate a maximum 10 Mbit/s. Tait recommends that you keep the port speed at the factory default setting of 10 Mbit/s. The reciter hardware and software are scaled to meet the performance requirements of processing multiple voice streams along with supervisory control and management communications. 10 Mbit/s is ample for those requirements. The 10/100 Mbit/s setting is provided for compatibility reasons, but it is possible under high traffic conditions at 100 Mbit/s for traffic arriving at the reciter at the full rate within a small timing window

© Tait Limited July 2017

to overflow internal buffers and therefore suffer packet loss. If you set the port speed to 100 Mbit/s and observe QoS lost packet alarms, then review your Ethernet port speed settings.

With the port speed at 10 Mbit/s it is particularly important to set the voice QoS on the reciter port of your site router or switch to a strict priority queue policy - which is the same policy that you should also be setting for your site link ports. The default QoS settings restrict the voice bandwidth to 1/25th of the port speed which is smaller than the required bandwidth for typical systems at 10 Mbit/s.

If necessary, refer to "Ethernet Connector" on page 116 for a list of Ethernet connection pin allocations.

© Tait Limited July 2017

4.6.9 Connecting General Purpose Inputs and Outputs

The base station has a number of general purpose inputs and outputs. These are connected via the 25-way D-range on the rear panel.

The pin allocations for the D-range connector are given in the following table. Not all pins are used in this release of the base station.

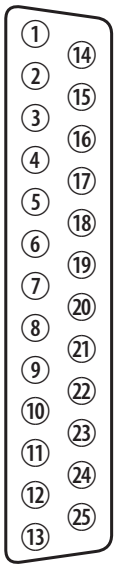

external view

Pin	Signal Name	Signal Type	Notes
1	not used		reserved for future use
2			
3			
4			
5			
6			
7			
8			
9			
10			
11	digital in 1	input	5V TTL logic active low
12	digital in 2		
13	+5.2VDC output	power output	maximum current 200mA
14	digital in 3	input	5V TTL logic active low
15	digital in 4		
16	digital in 5		
17	digital in 6		
18	digital in 7		
19	digital in 8		
20	digital in 9		
21	digital in 10		
22	digital in 11		
23	digital in 12		
24	not used		reserved for future use
25	ground	ground	

© Tait Limited July 2017

5 Working with Base Stations from Your PC

The normal web browser on your PC provides a window into the TB9400 base station. Use it to connect to the base station so that you can monitor, configure, diagnose, and calibrate it (if required).

This section describes the following:

- Connecting to the base station, including initially setting things up.
- Working with base station web pages.
- Carrying out basic tasks.

This section provides an overview of some aspects of the web interface. Refer to the Help for detailed instructions.

© Tait Limited July 2017

5.1 PC Recommendations

We recommend the following PC hardware and software for connecting to a TB9400 base station:

- SVGA Monitor (1024 x 768 minimum).
- Network connection.
- The base station works with recent versions of most modern browsers. Refer to the Release Notes for more information on currently supported browsers.

5.2 Connecting Your PC to the Base Station

You connect to a base station using your web browser. Using multiple browser windows or tabs, you can view more than one base station and more than one page of any base station at once. Base stations have a web-based interface that provides the pages you view. Up to ten users may be logged in to a base station at once.

The base station has three different user access levels: Administrator, Maintainer, and Monitor. Passwords can be defined for each level. This is done using the base station's web interface (Tools > Tools > User Administration). Refer to the Help for more information on setting user access levels.

Connections to the base station can be authenticated by a remote (i.e. centralized) service. Refer to the Help and "Setting Up Authentication" on page 88 for more information.

© Tait Limited July 2017

5.2.1 Logging In

1. Enter the base station's URL into your browser using a secure connection (https://). To find out the base station's IP address, on the front panel select Modules > Reciter 1 (or 2) > View Reciter 1 (or 2) Address. To set the IP address, refer to "Setting the IP Address" on page 83.

   Notice If access to this menu has been disabled, you cannot use the front panel to find out the IP address. Make sure that you store the IP address securely and do not lose it.

2. A security warning appears when you connect for the first time. Proceed anyway (refer to "Security Certificates" on page 84).

3. The login screen appears.

4. Enter your user name and password. When connecting for the first time, enter the user name "admin" and password "tbc_admin".

5. Click **Login**.

   Notice After logging in we recommend that you change the password and username for your own security (refer to "Working with the Web Interface" on page 89). Make sure that you store your passwords and usernames securely and do not lose them. They may be needed by Tait support personnel if assistance is required. Tait cannot retrieve forgotten passwords.

© Tait Limited July 2017

5.2.2 Setting the IP Address

Before the base station is installed on site, you need to provide it with its proper IP address. Make sure that you do not lose this address. A quick way to set the base station's IP address is to use the front panel, as described below.

Notice If access to this menu on the front panel has been disabled, log in to the base station and set the IP address using the web interface (Identity > Identity > Network Identity).

1. Use the front panel display to enter the IP address, subnet mask and gateway specified for this base station by the IP addressing plan for the network. From the base station menu select Modules > Reciter 1 (or 2) > Edit Reciter 1 (or 2) Address. If the home screen is showing, press an arrow key, a scroll key or OK to clear it.

Notice In this screen each octet in the address lines has provision for three characters. If an octet in the address has less than three characters, enter one or two leading zeroes so that each position is filled, even though the zeroes are not part of the address. For example, enter 172.25.163.47 as 172.025.163.047. Leading zeroes are removed when the address is programmed into the base station.

2. Set each address as described below. Use the left and right arrow keys to move the cursor across each line in the Addresses screen. Use the scroll keys to scroll through the available numbers for each position in a line.
   a. Set the IP address and press OK. This moves the cursor to the next line. To move the cursor back to the previous line, press the return key.
   b. Set the Mask address and press OK.
   c. Set the Gateway address and press OK.
   d. The display shows "Setting Reciter 1 (or 2) address Please wait..." while the base station confirms that the addresses are correct. When this process has finished, the display will show "SUCCEEDED" or "FAILED" as appropriate. Press OK to return to the previous menu.

3. If the process failed, try entering the address again. If it still fails, try the following:
   - enter the address through the web interface
   - check that the IP address you are trying to enter is not already in use by another device on the same subnet.

© Tait Limited July 2017

5.2.3 Security Certificates

You can upload your own security certificates to the base station (Tools > Settings > Web certificate). If you have installed and configured the appropriate Certification Authority software, you can issue security certificates for all base stations. After uploading the certificates to the base stations, you can configure all maintainers' web browsers to accept security certificates from your own Certification Authority.

ⓘ Before you have uploaded a security certificate to the base station, it will raise a security warning when your browser connects to it for the first time. The base station creates a self-signed certificate when the reciter's firmware is installed. Your browser raises a security warning because the security certificate was not issued by a trusted Certification Authority. The browser has a way of letting you override or bypass the security warning.

© Tait Limited July 2017

5.2.4 Connecting a Networked PC to a Base Station

You may want to temporarily disconnect a networked PC from its LAN in order to be able to establish a direct connection with the base station.
A physical connection is needed as well as an alternate (Windows 7, Windows Vista, Windows XP) or temporary (Windows 2000) IP address and subnet mask.

Windows 7 or Windows Vista

1. Remove the local area Ethernet connection and connect an Ethernet patch cable between the PC and the base station. You can use either a straight through or crossover Ethernet patch cable with the current base station firmware.
2. Navigate to Control Panel > Network and Internet > Network and Sharing Center.
3. Click View status.
4. In the Local Area Connection Status dialog box, click Properties.
5. In the Local Area Connection Properties dialog box, click Internet Protocol Version 4 (TCP/IPv4), and then click Properties.
6. Click Alternate Configuration.
7. Select the User configured option, and then enter a number that is on the same subnet as the base station. For example, if the TB9400 has IP 192.168.1.2, enter 192.168.1.3 for the PC.
8. Enter a suitable subnet mask, for example 255.255.255.0.

   The web browser should now be able to connect to any physically connected base station that is on the same subnet.
9. Once the web browser session is finished, re-connect the local area network cable to the PC. The PC then uses its normal TCP/IP properties.

ⓘ For those using Windows XP, please be aware that Microsoft no longer provides updates for this operating system, so you may be open to security risks.

Windows XP Professional

1. Remove the local area Ethernet connection and connect an Ethernet patch cable between the PC and the base station. You can use either a straight through or crossover Ethernet patch cable with the current base station firmware.
2. Click Start > Settings > Control Panel.
3. Double-click Network Connections.
4. Double-click the Local Area Network icon.
5. Click Properties.

© Tait Limited July 2017

6. Click Internet Protocol (TCP/IP), and then click Properties.

7. Click Alternate Configuration.

8. Select the User configured option, and then enter a number that is on the same subnet as the base station. For example, if the TB9400 has IP 192.168.1.2, enter 192.168.0.3 for the PC.

9. Enter a suitable subnet mask, for example 255.255.255.0.

   The web browser should now be able to connect to any physically connected base station that is on the same subnet.

10. Once the web browser session is finished, re-connect the local area network cable to the PC. The PC then uses its normal TCP/IP properties.

Windows 2000

1. Remove the local area Ethernet connection and connect an Ethernet patch cable between the PC and the base station. You can use either a straight through or crossover Ethernet patch cable with the current base station firmware.

2. Select Start > Settings > Network and Dialup Connections.

3. Double-click the Local Area Connection icon.

4. Click Properties.

5. Click Internet Protocol (TCP/IP), and then click Properties.

6. Note the current settings so that you can restore them later.

7. Select Use the following IP address, and then enter a number that is on the same subnet as the base station. For example, if the base station has IP 192.168.1.2, enter 192.168.0.3 for the PC.

8. Enter a suitable subnet mask, for example 255.255.255.0.

   The web browser should now be able to connect to the base station.

9. When you have finished the web browser session, re-connect the local area network cable to the PC and then restore the original PC configuration. When you close the Network connection dialog box, the restored configuration is applied.

© Tait Limited July 2017

5.2.5 Troubleshooting Connection Problems

If the attempt to connect to a base station failed, consider these possible causes.

1. Your PC is part of your organization's LAN and does not belong to the same subnet as the base station. Give the PC a suitable IP address and subnet mask as described in "Connecting a Networked PC to a Base Station" on page 85.

2. You are attempting to connect to the wrong IP address. Check that the IP address is correct.

   Notice You can quickly check the base station's IP address via the front panel, as long as access to this menu has not been disabled.

3. The link to the base station is down. Use ping to check.

4. You may have to bypass the proxy in your organization's LAN to access the Tait Network. Ask your system administrator to give you access.

5. JavaScript may be disabled in your browser. If JavaScript is disabled, your browser will be unable to connect to the base station. Note that modern browsers normally have JavaScript enabled by default.

5.2.6 Finding a Lost or Forgotten IP Address

Use the following procedure if an IP address has been lost or forgotten.

1. Mount the reciter in a TB9400 subrack and fit the front panel. Power up the subrack.

2. On the front panel display select Modules > Reciter 1 (or 2) > View Reciter 1 (or 2) Address.

© Tait Limited July 2017

5.2.7 Setting Up Authentication

Connections to the base station can be authenticated by a remote (i.e. centralized) service (Tools > Settings > Authentication). Two remote authentication protocols are supported: LDAP and RADIUS.

Notice Only people experienced with the AAA architecture and authentication protocols should make changes on this page.

Moving logins to a centralized server can provide enhanced security for a number of reasons, such as:

- less work is required to manage password-controlled access to all base stations in a network; you no longer need to change the password in each base station individually
- previously used passwords may be excluded from re-use
- access can be denied after a set number of incorrect passwords is entered
- passwords can be set to expire on a certain date
- remote access to base stations can be globally enabled and disabled as required for technical staff during the commissioning process.

Once the centralized server logins are set up, we recommend that only one local administrator login is left on the base station for emergency use (e.g. when the connection to the server is lost). The password for this emergency login should be kept secret.

Notice Unless they are deleted, any local logins left on the base station will still work and have priority over remote logins.

© Tait Limited July 2017

5.3 Working with the Web Interface

This section provides an overview of the web interface. Refer to the Help for detailed instructions.

When you connect to a base station, the browser displays a page like the following.

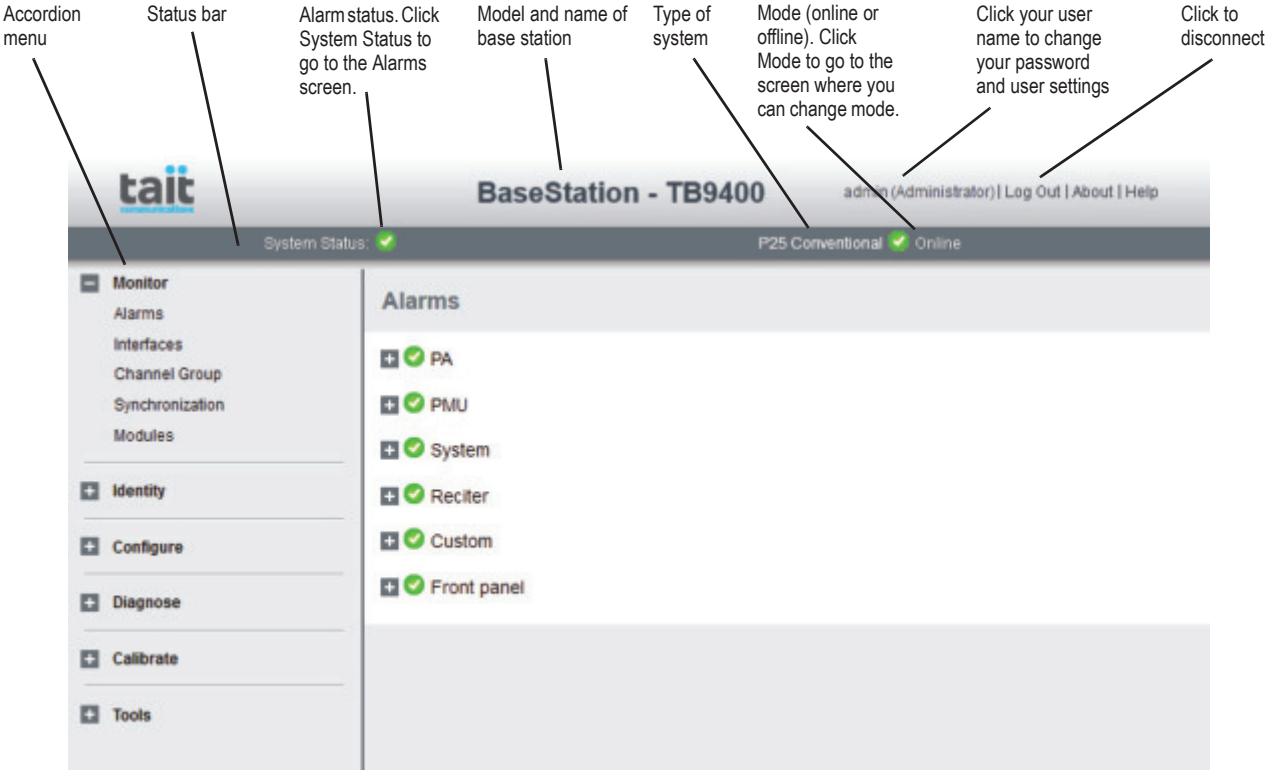

The accordion menu on the left gives you access to the various pages. Click a top level item (such as Configure) to open up its menu. Click on a menu item to display its page, then click on the appropriate tab on that page to display the required information. Click the + icon (⊞) on a menu item to expand the menu tree and the – icon (⊟) to collapse it again.

Press F11 for a full-screen display of the browser which does not show toolbars and other information. Press F11 again to return to the standard view.

ⓘ Using a browser window size smaller than 1024 x 768 may cause some pages to display incorrectly.

5.3.1 Monitoring Operation

Using the monitoring pages, you can see how the base station is currently operating.

For example, you can see the status of its RF interface (Monitor > Interfaces > P25 RF).

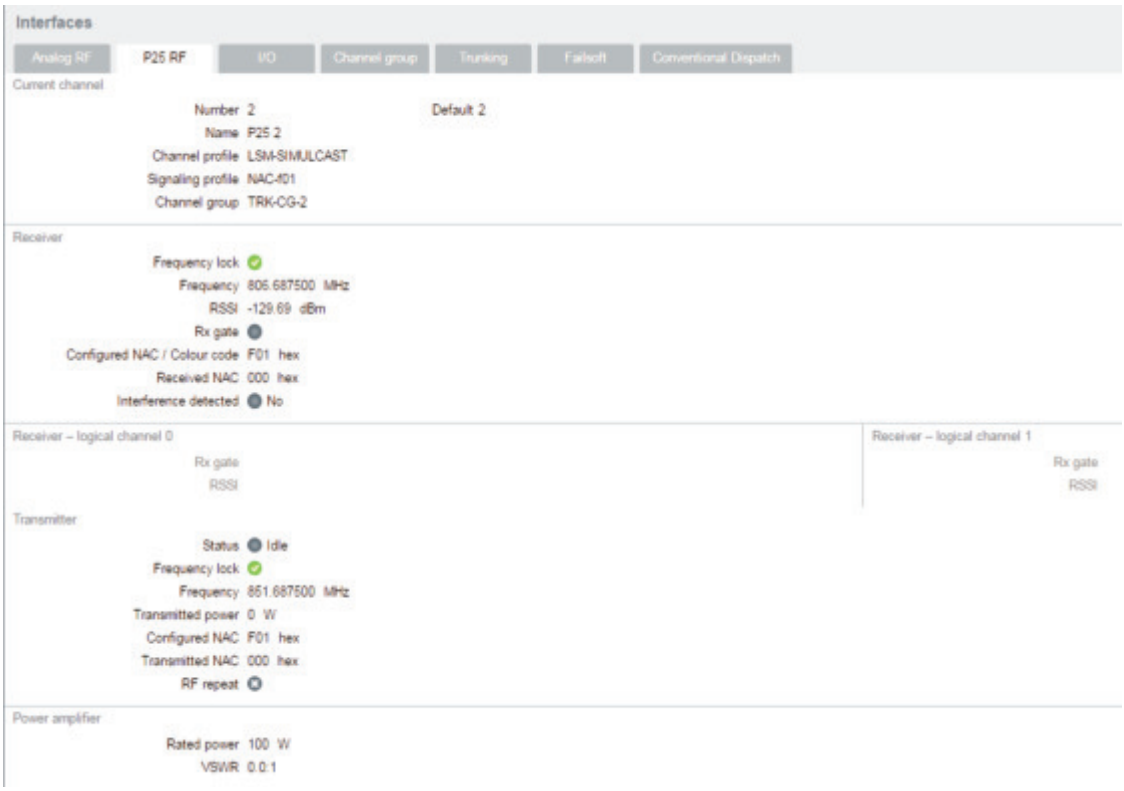

If the base station is part of a simulcast network, you can monitor the simulcast timing of the transmitter and the central voter (Monitor > Synchronization). When connected to the central voter, the browser can monitor its timing.

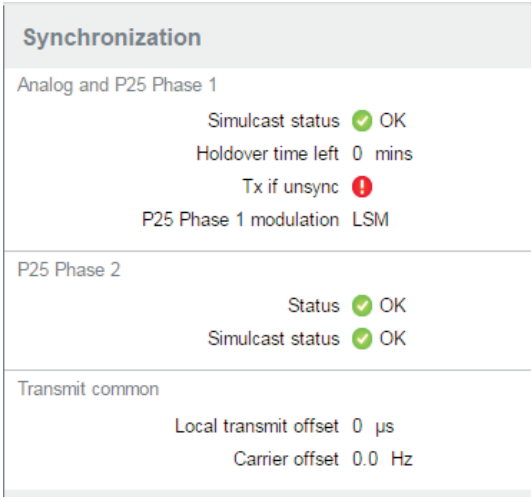

© Tait Limited July 2017

5.3.2 Troubleshooting Alarms

If the Alarm status on the status bar displays red, one or more alarms have been triggered, and the Alarms menu automatically expands to display the alarm(s). Click Help and navigate to the description of that alarm.

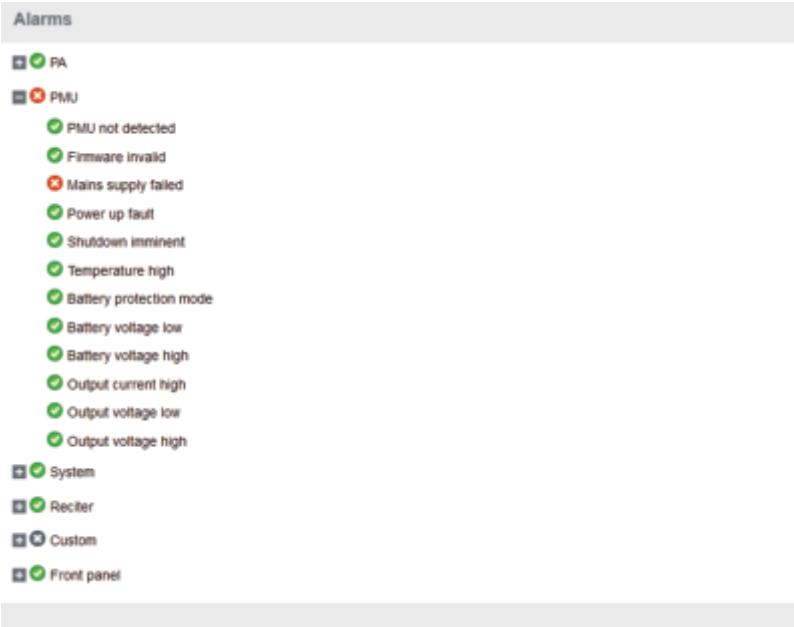

5.3.3 Viewing Configuration Settings

The base station has many configuration settings that personalize it for its particular role in the network. Some settings, such as those for alarm thresholds (Configure > Alarms > Thresholds), always apply.

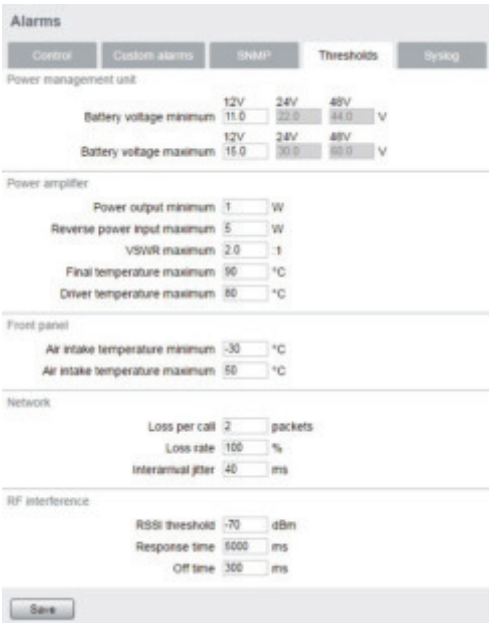

Others are channel-based so that they can be dynamically changed. To view these, you first need to know the channel on which the base station is operating. To see the channel number and profiles the base station is using, select Monitor > Interfaces > RF >.

Channels can be edited from Configure > Base Station > Channels. Select a channel and click **Edit** to view details of the channel. Clicking directly on any text in a line will also open the edit screen.

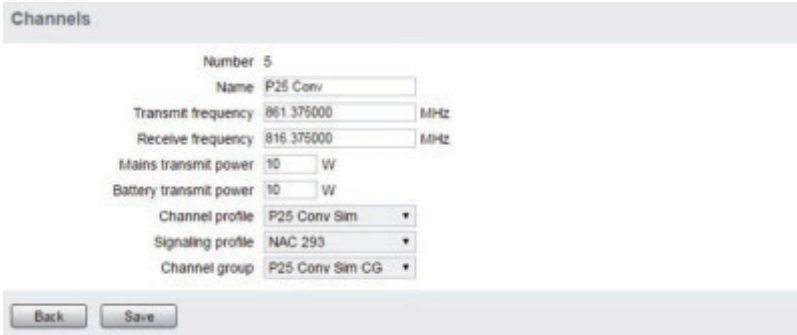

© Tait Limited July 2017

Channel and signaling settings are grouped together in profiles. The RF monitoring page (see above) shows the channel profile and signaling profile the channel uses. To view the channel profile settings, select Configure > RF Interface > Channel Profiles and select the profile you wish to review or edit.

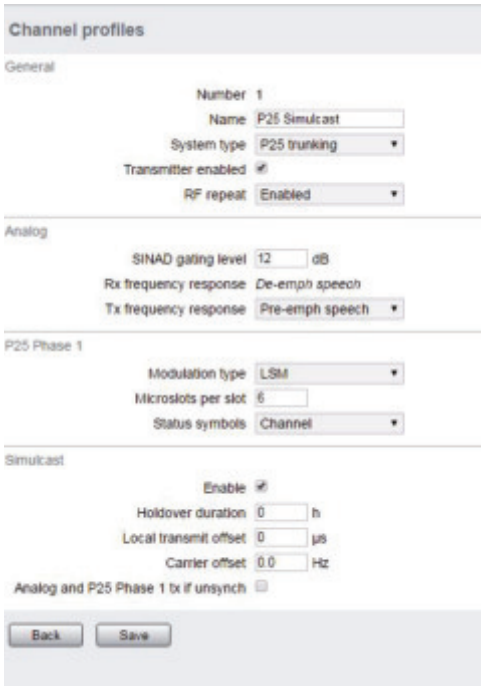

Proceed in a similar way to view signaling profile and channel group settings.

5.3.4 Viewing the Base Station and Network Identity

Each base station in a network has a unique base station and network identity.

Select Identity > Identity and then Base Station or Network to view details such as name, receiver number, default channel and network addresses. Note that the Host name field has a maximum of 63 characters, and may use the characters a–z, 0–9, dot and hyphen. You cannot use spaces.

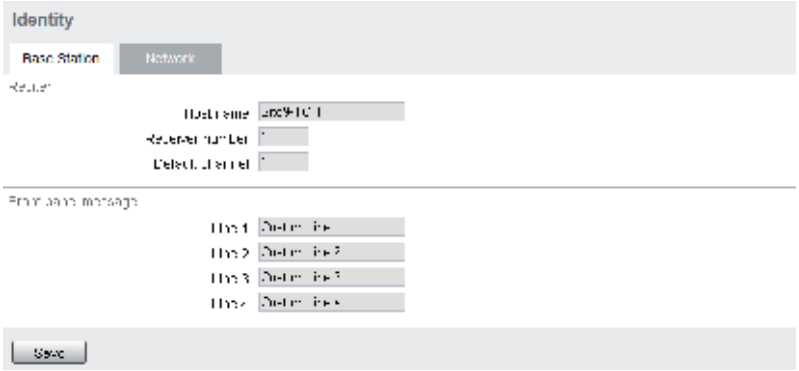

You can also enter here the four lines of information you want to appear on the home screen on the front panel display. Each line has a maximum of 20 characters.

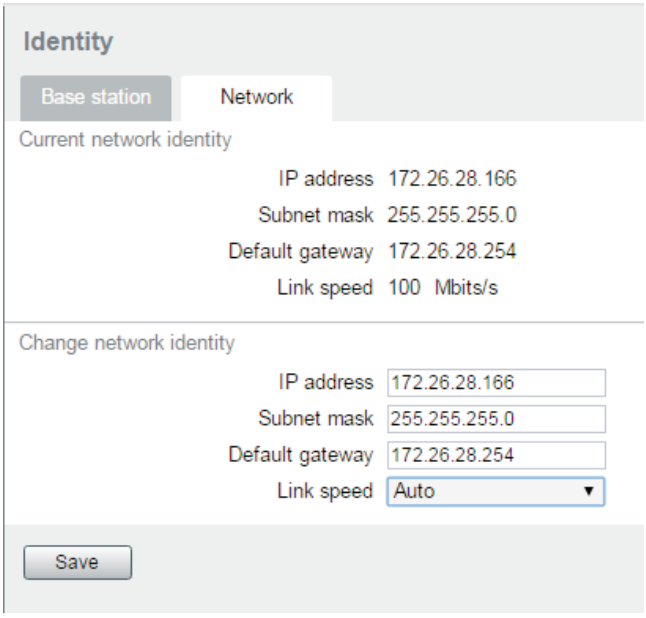

The Link speed configuration option enables the Ethernet port speed auto-negotiation to 10/100 MBits/s or to negotiate a maximum of 10 Mbits/s. Under high traffic conditions it is possible for traffic arriving at the reciter at the full rate (100 Mbits/s) within a small timing window to overflow internal buffers and therefore suffer packet loss. To minimize this cause of packet loss a setting of 10 Mbits/s is recommended.

© Tait Limited July 2017

5.4 Basic Tasks

5.4.1 User Settings

Click on your user name in the top right corner of the page to change your password. Note that this information is stored in the base station, not in your browser. To choose temperature units, go to Configure > Base Station > Miscellaneous and select either Temperature °C or °F.

5.4.2 Taking the Base Station Offline

You may need to take the base station offline in order to carry out diagnostic tests or to take it out of service if a fault develops.

1. Click Mode on the status bar (or Select Tools > Tools > Base Station).
2. Under Control, select Offline. Click Offline to confirm the change. In the Status area, the Mode display changes first to “Changing”, and then to “Offline” ( ).

5.4.3 Working with Configuration Files

At any time, you can save the current configuration settings as a file (Tools > Files > Configuration > Backup configuration). This is stored in the base station, but we recommend that you download it and store it on your computer as an off-site backup. The base station identity and network identity are not saved as part of the configuration file.

The following parameters are not restored on a base station when a configuration is restored:

- Keypad enabled
- Trunking capability
- Trunking node priority
- Host name
- Default channel
- Operating mode
- Front panel test lines 1 through 4
- IP address
- Subnet mask
- Gateway address
- Link speed

You may want to develop a master configuration and upload it to all base stations in the network. The master configuration can contain all the

© Tait Limited July 2017

different channel configurations and can be common to all base stations. The base station identity selects the default channel.

> Base stations are delivered with a default configuration which provides a safe set of values. We recommend that you download it and store it on your computer as a backup before changing and saving any configuration settings.

You can also generate a report containing all the base station's configuration settings (Tools > Files > Configuration > Configuration report), which can be saved as a text file. We recommend that you do this when the base station is commissioned. This report can be useful later if there is a problem with the base station. Comparing the original report with the later one may highlight changes in configuration that are causing a problem.

5.4.4 Configuring Single Base Stations

Most base stations in non-simulcast trunked networks are single. They interface to a site controller but not to other base stations. The following explains the special considerations when configuring single base stations.

Channel Group Membership

Although single base stations are not actually part of a channel group, their channel configurations (Configure > Base Station > Channels) must still select a channel group (Configure > Channel Group > Channel Groups). Once a channel group has been selected, the following parameters need to be configured.

Channel Group IP Address

The selected channel group must be configured for single base station operation. Specify 127.0.0.1 as the channel group IP address. This is the base station's localhost address and stops it from attempting to send voice packets to other base stations.

Marshaling Duration

Although marshalling duration applies only to control channels, and has no effect on traffic channels, we recommend that you configure the marshalling duration for each base station as described below. This will allow any base station to operate as a control channel when required.

Configure the channel group settings to specify either fixed or self-regulating marshaling, and allow a duration of 40 ms. This gives the control channel's transmitter an appropriate buffer.

The self-regulating marshaling sub-system includes a configured satellite transmit buffer minimum, which the regulation algorithm at the master seeks to maintain. All satellites report the level in their transmit buffer to the master. The master adjusts its marshaling time allowance up or down to maintain the configured value at all satellites.

© Tait Limited July 2017

Trunking Interface

Single base stations need a control connection to their site controller. A single base station interfaces to the site controller in the same way as the master base station in a trunked channel group. Select Configure > Network Interfaces > Trunking to configure this.

5.4.5 Configuring Receive-Only Base Stations

You can program a receiver with the same configuration as a reciter. This will keep the number of required configuration files to a minimum and, if possible, re-use existing configuration files.

Transmit information for the receiver will be displayed in the web interface, but this can be ignored. Also, some polled SNMP parameters, such as Tx NAC, will return the correct transmitter configuration data, but none of these parameters is used by the receiver.

5.4.6 Configuring Base Stations in a Channel Group

You can configure the way the base station behaves in its channel group. Also, qualified network engineers can change DSCP assignments so that routers and switches provide a different quality of service to different types of IP packets. For more information on designing and configuring simulcast channel groups, refer to TN-1514 (P25 Phase 1) or TN-2341 (P25 Phase 2).

In trunked networks, many base stations are single and not actually part of a channel group. However, they still must be assigned to a channel group configuration and some of its parameters must be set correctly.

5.4.7 Setting Up Custom Alarms

Each of the base station's 12 digital inputs can be used to raise a custom alarm when the input goes high or low. The Custom Alarms form (Configure > Alarms > Custom Alarms) allows you to assign a name to each custom alarm, and to configure whether the alarm is triggered when the digital input goes high or low. Custom alarms are reported via the web interface and SNMP traps.

Custom alarms are used to provide an alarm when an external event activates a digital input. You can rename any of the available alarms to provide a more meaningful name, such as "Door open".

ⓘ Take care when setting the severity of alarms, including custom alarms (Configure > Alarms > Severity). Setting an alarm's severity to Major will cause the node to take the base station out of service when the alarm is raised. See below for the severity of each alarm.

© Tait Limited July 2017

Major An alarm of this severity causes the node to take a base station out of service. This alarm **must** be cleared at the base station before the channel will be used again. To avoid this, an alarm's severity **must** be set to 'Minor' or 'Notification'.

Minor An alarm of this severity means the base station has a fault that will need addressing, but it remains capable of operating as part of the radio network.

Notification An alarm of this severity is not reported to the Node.

5.4.8 Disabling the Front Panel Keypad

You can disable the front panel keypad to prevent access to the base station via the front panel menus. Select Configure > Base Station > Miscellaneous and in the Front Panel area clear the Keypad enabled check box.

Notice If you disable the front panel keypad, you cannot use it to find out the base station's IP address. Make sure that you store the IP address securely and do not lose it.

5.4.9 Preparing to Download Firmware

New versions of base station firmware are remotely downloaded to base stations from a package server (a web server application). You can set up a single computer to be the central package server for all the base stations on your network, using a web server of your choice. Tait also provides the Mongoose[1] web server as part of the base station firmware package for use with a temporary package server, such as a laptop.

The base station firmware package can be downloaded as a zip file from the Tait support website.

This procedure describes using the Mongoose web server.

Installing the Firmware Package

The installation procedure copies files into a folder and adds items to the Windows Start menu (Start > Programs > Tait Applications > TB9400). From the Start menu you can then access the Help, licenses, manuals and release notes for each firmware package, and also start Mongoose.

You do not have to install Mongoose to make it work, because it is a self-contained executable file. Once started, it will run in the background until stopped, or the computer is shut down. Mongoose must also run from the same folder as the firmware files.

If you are downloading a base station package zip file:

1. Mongoose runs on Windows only.

© Tait Limited July 2017

1. Save the zip file to a suitable location on the hard drive of the package server computer.

2. Extract the zip file, then navigate to the root folder and double-click *TB9400.msi* to run the Windows installer.

Notice Tait recommends that the maximum length of the path to the location of the extracted files is 100 characters. Using a longer path may cause the files to be extracted incorrectly.

Setting Up a Central Package Server

It is beyond the scope of this manual to describe the exact procedure for setting up a central package server for any particular network. Tait expects that each customer will configure their own package server according to the requirements for their network.

However, you do need to configure each base station with the IP address and port of the package server computer.

1. Log in to the base station and select Configure > Base Station > Miscellaneous.

2. Under Package server, enter the IP address and port number of the package server.

3. Download the firmware as described in the Help.

Notice The base station has enough space for two firmware packages. If the base station already has two packages, delete the unwanted package before downloading another.

Setting up a Temporary Package Server

If you want to use a laptop as a temporary package server, you can temporarily override the package server IP address and port in each base station.

1. Run Mongoose on the package server (Start > Programs > Tait Applications > TB9400 > Mongoose).

2. Windows Firewall may raise a Security Alert about allowing Mongoose to access your network or the internet.

   a. In Windows 7 allow access to private networks.

   b. In Windows XP click Unblock.

3. Log in to the base station and select Tools > Firmware > Download.

4. Under Package server, enter the IP address of the laptop. The default port number is 8080.

5. Download the firmware as described in the Help.

6. If you have trouble with any of the above procedures, please consider the following points:

   - The firmware download process uses the HTTP protocol. If you

© Tait Limited July 2017

are using a laptop from outside the radio communications network, make sure that HTTP traffic can get through the firewall.

- If Mongoose fails to start, it may already be running, or another application may be using port 8080.
- If the error message “Could not find index file” appears when listing packages, Windows security may be silently blocking access for Mongoose. Turn off the laptop’s WiFi and temporarily disable its firewall, then try again.
- The base station has enough space for two firmware packages. If the base station already has two packages, delete the unwanted package before downloading another.

5.4.10 Checking for Interference on a Receive Channel

You can use the Signal Level page (Diagnose > RF Interface > Signal Level) to look for sources of interference across a range of receive frequencies.

The chart on this page has two lines. One shows the current RSSI measurement for the selected frequency. The second shows a historical trace of peak RSSI readings on that frequency.

© Tait Limited July 2017

6 Maintenance

The base station is designed to be very reliable and should require little maintenance. However, performing regular checks will prolong the life of the equipment and prevent problems from happening.

It is beyond the scope of this manual to list every check that you should perform on your base station. The type and frequency of maintenance checks will depend on the location and type of your system. The checks and procedures listed below can be used as a starting point for your maintenance schedule.

Performance Checks

We suggest you monitor the following operational parameters using the web interface:

- VSWR
- DC input voltage, especially on transmit
- any temperature alarms
- forward power

Simulcast

- external reference absent
- NTP unsynchronised

These basic checks will provide an overview of how well your base station is operating.

Reciter

We recommend that you calibrate the reciter after three months of operation, and then annually for H-band reciters, or every three years for B-band reciters. The calibration procedure is described in the Help (Calibrate > Reciter > Internal reference), and requires a calibrated frequency generator.

PA

There are no special maintenance requirements for the PA.

PMU

There are no special maintenance requirements for the PMU. However, we suggest that you periodically check that the screws on the DC input terminals are tightened to the recommended torque of 18–20 lbf · in (2–2.25 N · m). They may work loose with thermal cycling. Also, if you are using battery back-up, you should check the batteries regularly in accordance with the manufacturer's recommendations.

Ventilation

The base station has been designed to have a front-to-back cooling airflow. We strongly recommend that you periodically check and maintain the ventilation requirements described in "Equipment Ventilation" on page 49 to ensure a long life and trouble-free operation for your base station. Also

© Tait Limited July 2017

check for a build-up of dust in and around the module heatsink fins, front panel air intakes, and fan ducts.

Cooling Fans

The cooling fans have a long service life and have no special maintenance requirements. You can use the web interface to configure the base station to generate an alarm if any of the front panel cooling fans fails. Refer to the Help for more details.

© Tait Limited July 2017

7 Troubleshooting

Check that all front and rear connectors and cables are in place, and that power switches are on. If problems persist, contact your regional Tait office.

Symptom	Possible Cause	Action
Alarm LED red and steady (not flashing)	The base station is in Offline mode	Use the web interface to put the base station in Online mode
Alarm LED flashing	One or more faults are present	Use the web interface to identify the faulty module
Alarm LED flashing, display shows “Please wait...”, fans are running slowly	Front panel has lost communication with reciter 1	Check cable connections. Check front panel D-range connector is pressed in fully. Use the web interface to check reciter 1 (Monitor > Modules > Inventory).
Power LED on front panel is on, but keypad does not work	Keypad is disabled	Check that the keypad is enabled in the web interface (Configure > Base Station > Miscellaneous)
Power LED flashing, fans are running, but display is blank	The base station is downloading firmware	Use the web interface to monitor the progress of the firmware download
No power or LEDs on front panel	System control bus not connected to front panel	Check cable connections
	Pins bent on 15-pin D-range plug on front panel	Replace or repair D-range plug
Desired feature is not operating	Feature license missing	Check that you have the necessary feature licenses (refer to “Licenses” on page 20 and the Help)
	Feature license present but feature is not enabled	Use the web interface to enable the feature
Tx stuck on	Tx and Rx frequencies are the same	Reconfigure Tx and Rx with different frequencies
The base station appears to make random transmissions	CWID feature enabled	No action: CWID transmissions are made according to configuration settings
PA has low power	Channel is configured to low power	Use the web interface to check the power settings
	PA may have suffered partial damage	Replace module and send faulty module for servicing

© Tait Limited July 2017

8 Replacing Modules

Caution The 100 W PA and PMU weigh between 9.3 lb (4.2 kg) and 15.4 lb (7 kg) each. Take care when handling these modules to avoid personal injury.

Notice The cooling fans are mounted on the front panel and will only operate when the panel is fitted correctly to the front of the subrack. To ensure adequate airflow through the base station, do not operate it for more than a few minutes with the front panel removed (e.g. for servicing purposes). Both the PMU and PA modules have built-in protection mechanisms to prevent damage from overheating.

© Tait Limited July 2017

8.1 Saving the Base Station's Configuration

Before replacing a module in the base station, you should decide whether you need to save its configuration data. If you are unsure whether you have a record of the configuration, backup and save the configuration file before removing any modules. Once you have replaced the module, you will be able to restore the original configuration to the base station.

If one or more of the modules is faulty, you may be unable to save the configuration. In this case, you will have to restore the configuration from a back-up file. Refer to the Help for more information.

© Tait Limited July 2017

8.2 Preliminary Disassembly

Hot-pluggable Modules

The reciter, PA and front panel are hot-pluggable and can be removed without powering down the whole base station. These modules can also be removed without disrupting the system control bus communications with the other modules in the subrack.

Notice Before removing a PA, first disconnect the DC input, transmit forward input and transmit reverse output, followed by the RF output. After refitting the PA, reconnect the RF output first, followed by the transmit forward input, transmit reverse output, and then the DC input.

Disconnecting the Power

If you want to disconnect the power before working on the base station, follow these steps.

Caution Before disconnecting the battery supply leads from the PMU, open the circuit breaker or disconnect the supply leads from the battery.

1. Turn off the AC ① and DC ② switches at the rear of the PMU.
2. Also at the rear of the PMU disconnect the mains ③ and battery ④ supply leads, and the auxiliary DC supply lead ⑤ (if fitted).

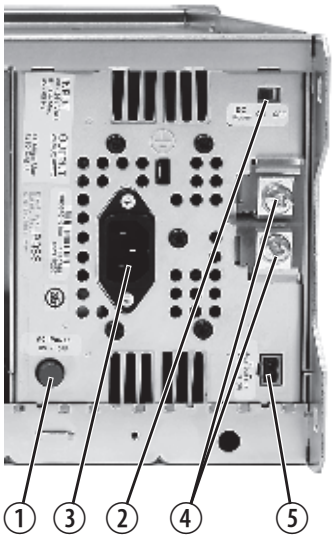

© Tait Limited July 2017

Remove the Front Panel

1. Using a Pozidriv PZ2 screwdriver, undo the fastener at each end of the front panel ① with a quarter turn counterclockwise.

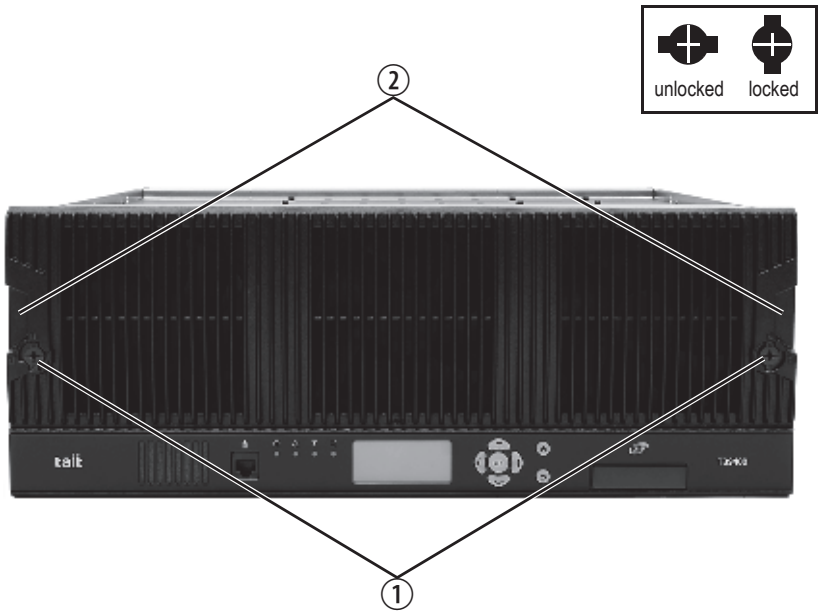

2. Place a finger in the recess ② provided at each end of the front panel and pull the front panel away from the subrack.

Cable Retaining Clips

The cable retaining clips are used to hold cables in position at the top of the subrack so that they do not interfere with the mounting of the front panel, or interrupt the airflow through the base station.

If you need to remove any front panel cables, simply pull the front of the cable retaining clip down and then slide it out from the subrack until it reaches the end of its travel.

8.3 Replacing a Reciter

Removal

1. If you have not already done so, carry out the instructions in "Preliminary Disassembly" on page 106.

2. At the rear of the reciter, unplug the RF input cable ①, any system cables ②, and the external reference ③ and 1 PPS ④ cables (if fitted).

3. At the front of the reciter, unplug the transmit reverse ⑤ and transmit forward ⑥ cables (if fitted), and move both cables to one side. Unplug both ends of the system control bus cable ⑦ and remove it.

4. Loosen the screw securing the retaining clamp ⑧ and rotate the clamp through 90° to clear the module.

5. Slide the reciter out of the subrack, taking care not to damage any of the cables.

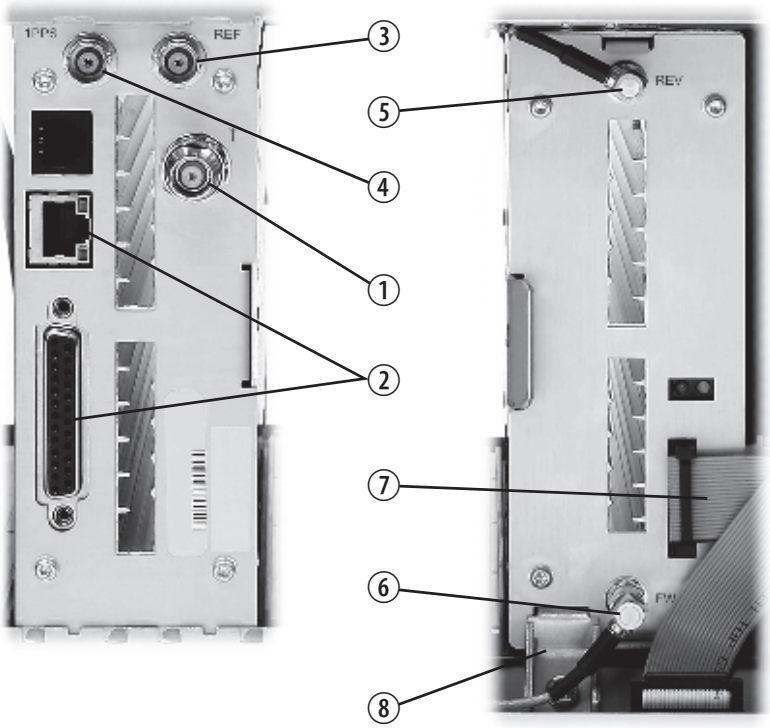

© Tait Limited July 2017

Refitting

1. Slide the replacement reciter into the subrack and secure it with the retaining clamp.
2. Reconnect all the front and rear panel cables previously disconnected. Ensure the front panel cables are positioned correctly, and retained where required by the cable retaining clips in the top of the subrack (refer to "Appendix B – Inter-Module Connections" on page 117).
3. Tighten the nut on the SMA connector to a torque of 5 lbf·in (0.6 N·m).
4. Carry out the instructions in "Final Reassembly" on page 115.

© Tait Limited July 2017

8.4 Replacing a Power Amplifier

Notice Before removing a PA, first disconnect the DC input, transmit forward input and transmit reverse output, followed by the RF output. After refitting the PA, reconnect the RF output first, followed by the transmit forward input, transmit reverse output, and then the DC input.

Removal

1. If you have not already done so, carry out the instructions in "Preliminary Disassembly" on page 106.
2. At the front of the PA, unplug the DC input ①, transmit forward ② and transmit reverse ③ cables, and move the cables to one side. Unplug both ends of the system control bus cable ④ and remove it.
3. At the rear of the PA, unplug the RF output cable.
4. Loosen the screw securing the retaining clamp(s) ⑤ and rotate the clamp(s) through 90° to clear the module.
5. Slide the PA out of the subrack, taking care not to damage any of the cables.

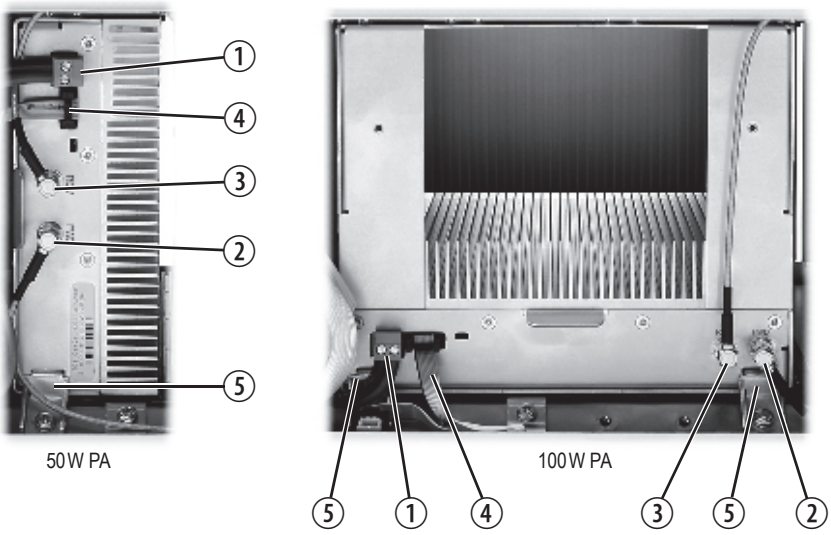

Refitting

1. Slide the replacement PA into the subrack and secure it with the retaining clamp(s).
2. At the rear of the PA, connect the RF output cable.
3. At the front of the PA, connect the transmit forward and transmit reverse cables, followed by the DC input cable.
4. Reconnect all the other front and rear panel cables previously disconnected. Ensure the front panel cables are positioned correctly, and retained where required by the cable retaining clips in the top of the subrack (refer to "Appendix B – Inter-Module Connections" on page 117).

© Tait Limited July 2017

5. Tighten the nut on the SMA connector to a torque of 5 lbf·in (0.6 N·m).

6. Carry out the instructions in “Final Reassembly” on page 115.

8.5 Replacing a Power Management Unit

Notice You must disconnect the AC and DC power cables before removing the PMU from the subrack.

Removal

1. If you have not already done so, carry out the instructions in "Preliminary Disassembly" on page 106.
2. At the front of the PMU, unplug and remove the output power cable ① to the subrack interconnect board. Also unplug and remove the system control bus cable ②.
3. Unplug the output power cable to the PA ③ and move it to one side.
4. Loosen the screws securing the retaining clamps ④ and rotate the clamps through 90° to clear the module.
5. Slide the PMU out of the subrack, taking care not to damage any of the cables.

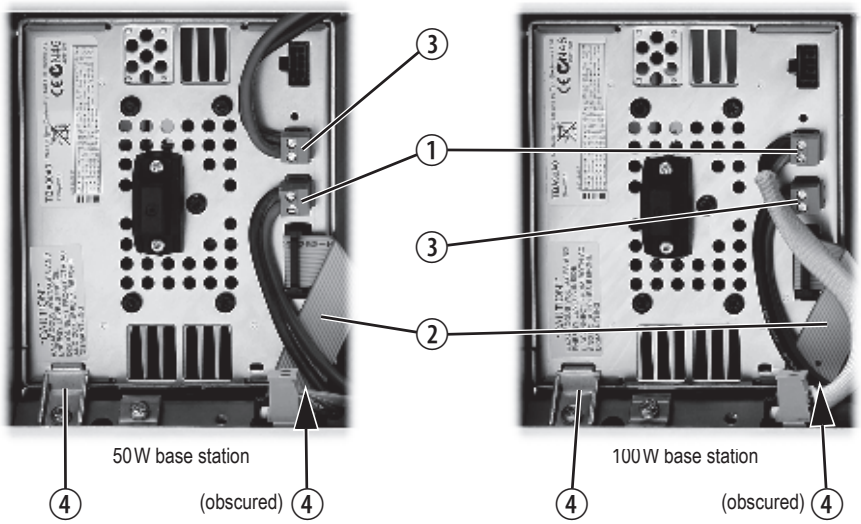

Refitting

1. Slide the replacement PMU into the subrack and secure it with the retaining clamps.
2. Reconnect all the front and rear panel cables previously disconnected. Connect the DC power cables on the rear panel as shown in Figure 4.8 on page 70. Tighten the screws to a torque of 18–20 lbf·in (2–2.25 N·m). Ensure the front panel cables are positioned correctly, and retained where required by the cable retaining clips in the top of the subrack (refer to "Appendix B – Inter-Module Connections" on page 117).
3. Carry out the instructions in "Final Reassembly" on page 115.

© Tait Limited July 2017

8.6 Replacing the Module Guide Rails

The module guide rails are held in place by four hooks that fit through the slots in the top and bottom of the subrack. There is also a locking tab which prevents the guide rails from working loose.

Notice Subracks produced from late 2008 onwards have wider slots than earlier subracks. Guide rails designed for these wider slots will not fit older subracks with narrow slots.

Removal

1. Bottom Guide Rails
   a. Insert a small flat-blade screwdriver under the front end of the guide rail and lift it slightly ①. This will ensure the small locking tab is clear of the slot in the subrack.
   b. While holding the front end of the guide rail up, pull the guide rail towards the front of the subrack ② and lift it clear of the slots.
2. Top Rails
   a. Insert a small flat-blade screwdriver under the rear end of the guide rail and lift it slightly ③. This will ensure the small locking tab is clear of the slot in the subrack.
   b. While holding the rear end of the guide rail up, pull the guide rail towards the rear of the subrack ④ and lift it clear of the slots.

bottom guide rail

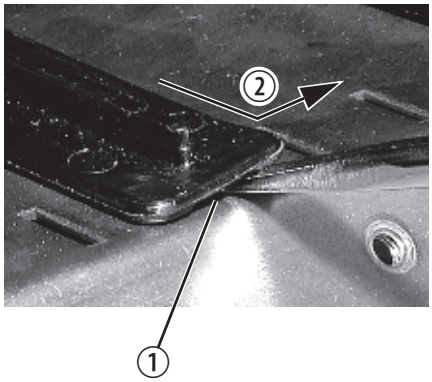

top guide rail

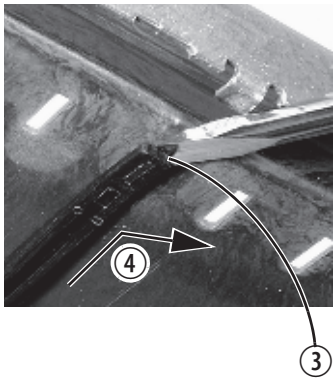

Refitting

1. Bottom Guide Rails
   a. With the locating hooks pointing towards the rear of the subrack, insert the hooks into the slots in the subrack.
   b. Push the guide rail towards the rear of the subrack until you hear the locking tab “click” into place.
2. Top Guide Rails
   a. With the locating hooks pointing towards the front of the subrack, insert the hooks into the slots in the subrack.
   b. Push the guide rail towards the front of the subrack until you hear the locking tab “click” into place.

© Tait Limited July 2017

8.7 Replacing the Subrack Interconnect Board

Removal

1. If you have not already done so, carry out the instructions in "Preliminary Disassembly" on page 106.
2. Disconnect any system control bus cables and DC power cables from the subrack board.
3. Remove the three M3 nuts and spring washers ① securing the right end of the board to the subrack.
4. Remove the D-range cover ②.
5. Remove the two retaining clamps ③ securing the left end and centre of the board.
6. Remove the board.

Refitting

1. If previously removed, replace the insulator ④.
2. Refit the board and D-range cover, and secure with the M3 nuts and spring washers. Replace the two retaining clamps.
3. Reconnect the system control bus cables and reciter DC cables as shown in "Appendix B – Inter-Module Connections" on page 117).

Figure 8.1 Replacing the subrack interconnect board

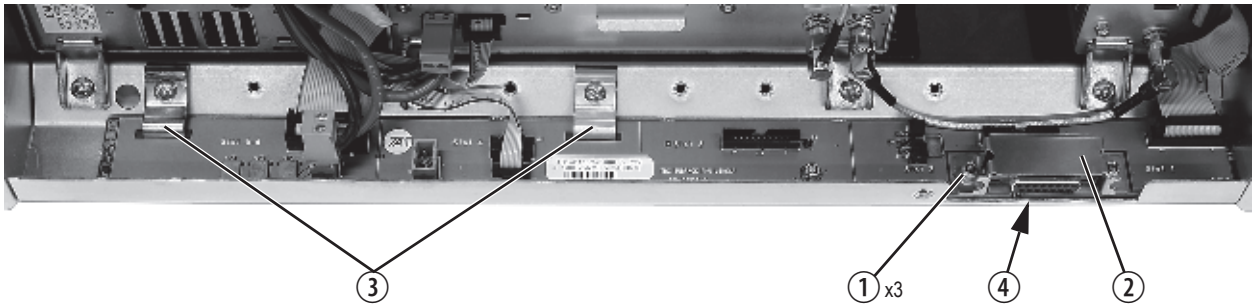

© Tait Limited July 2017

8.8 Final Reassembly

Notice You must fit the correct type of front panel to your base station. The different types of front panel and fan ducts are explained in "Appendix C – Identifying Front Panels" on page 121.

1. Before fitting the front panel, ensure that all cables are secured and positioned correctly so they are clear of the fan ducts (refer to "Appendix B – Inter-Module Connections" on page 117). Otherwise the panel may not fit properly, or you may damage the cables.

2. Refit the Front Panel
   a. Ensure that the fasteners ① are in the unlocked position.
   b. Fit the front panel onto the locating pegs on the subrack.
   c. Secure each fastener with a quarter turn clockwise.
   d. **Push the self-aligning D-range connector ② fully in.**

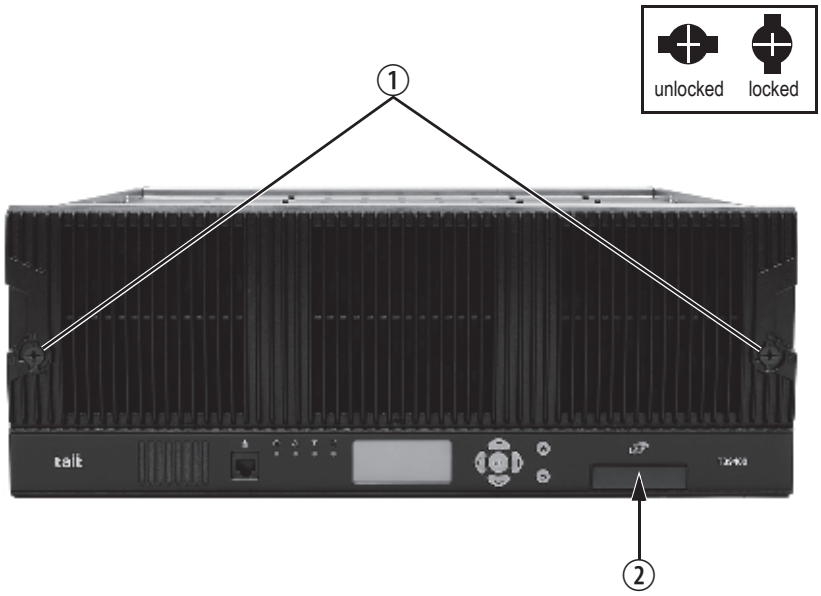

3. Before powering up the base station, check that all power, RF and system cables are connected correctly and securely at the rear of the base station.

Notice When refitting modules, make sure they are fitted correctly into the subrack and all retaining clamps are securely tightened. The recommended torque for the retaining clamp screws is 17 lbf·in (1.9 N·m). As well as holding the modules in place, the retaining clamps push the modules hard against the rear rail of the subrack to ensure a good ground connection between the modules and the subrack.

Appendix A – Interface Pin Allocations

System Interface Connector

For the pin allocations for the system interface D-range connector, see "Connecting General Purpose Inputs and Outputs" on page 79.

Ethernet Connector

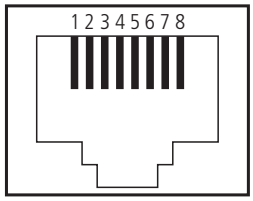

external view

Pin	Description
1	transmit data +
2	transmit data –
3	receive data +
4	not connected
5	not connected
6	receive data –
7	not connected
8	not connected

PMU Auxiliary DC Output

The pin allocations for the auxiliary DC output on the PMU are given in the following table.

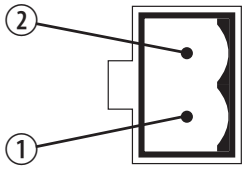

2-pin connector - external view

Pin	Description
1	+V output
2	–V output

© Tait Limited July 2017

Appendix B – Inter-Module Connections

Dual 50W Base Station

The connections between modules at the front of a dual 50W base station are shown below.

Dual 50W base station inter-module connections

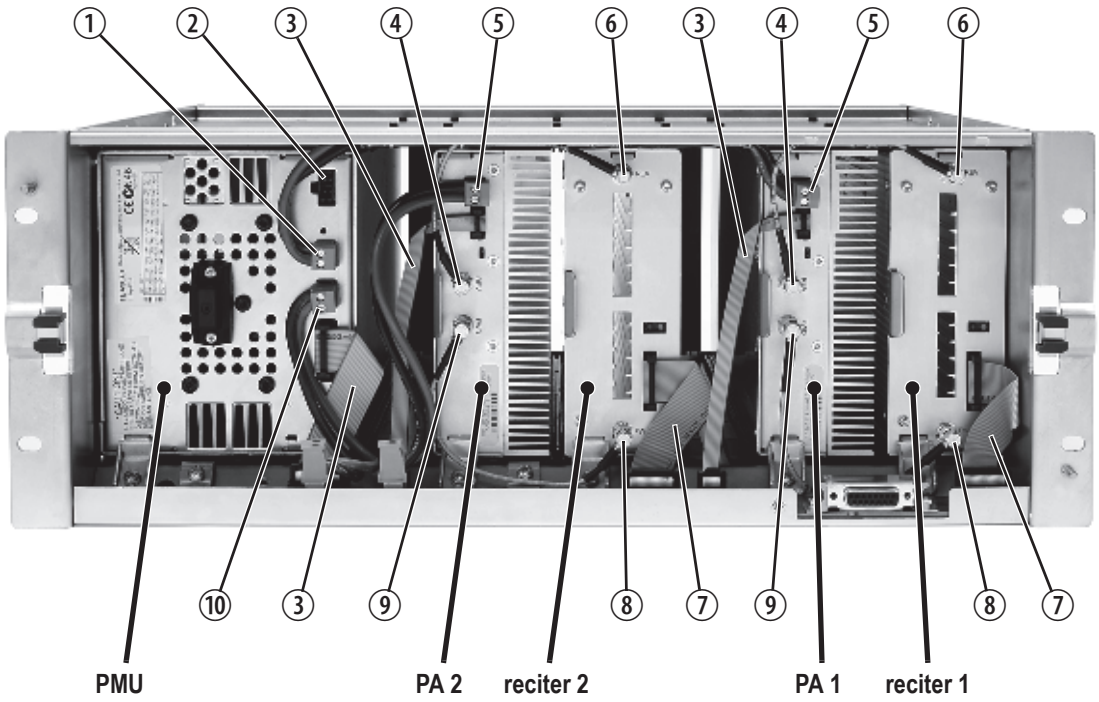

① 28VDC output for PA 1

② not used

③ system control bus

④ transmit reverse output

⑤ 28VDC input

⑥ transmit reverse input

⑦ system control bus and 28VDC input

⑧ transmit forward output

⑨ transmit forward input

⑩ 28VDC output to subrack interconnect board

DC Supply

PA 1 is powered by a direct connection from the PMU. The other modules in the subrack are powered from the PMU via the subrack interconnect board. The DC supply to the reciters is via the system control bus ribbon cable.

Single 50 W Base Station

The connections between modules at the front of a single 50 W base station are shown below.

Single 50 W base station inter-module connections

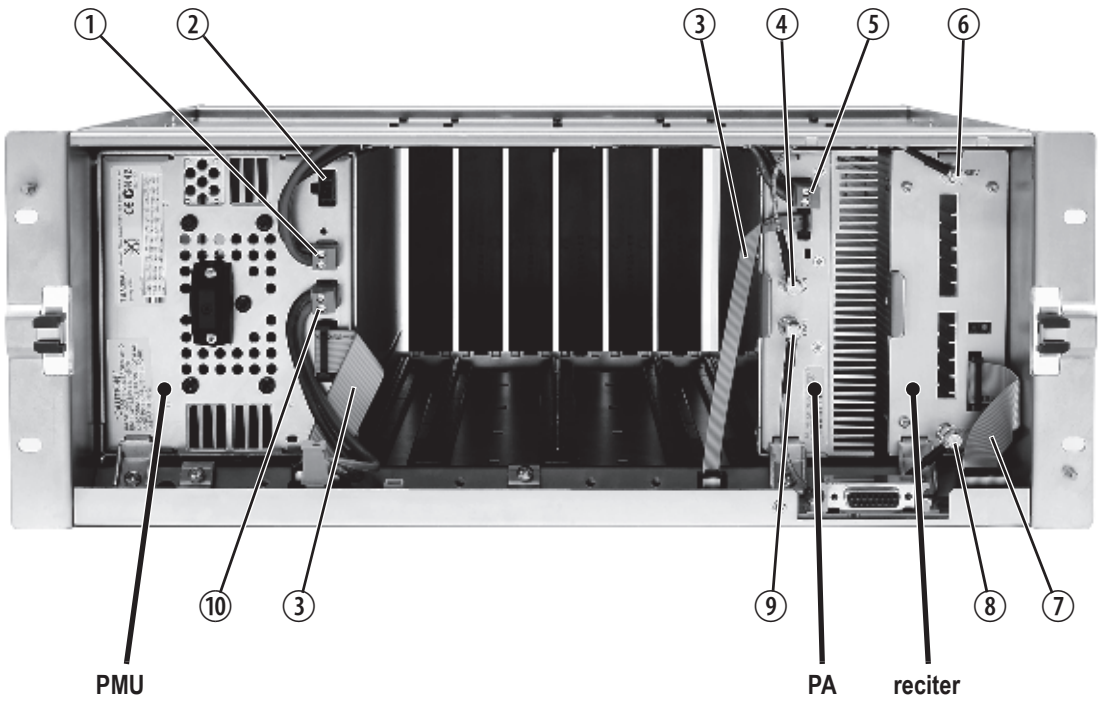

1. 28 VDC output for PA
2. not used
3. system control bus
4. transmit reverse output
5. 28 VDC input
6. transmit reverse input
7. system control bus and 28 VDC input
8. transmit forward output
9. transmit forward input
10. 28 VDC output to subrack interconnect board

DC Supply

The PA is powered by a direct connection from the PMU. The reciter is powered from the PMU via the subrack interconnect board and system control bus ribbon cable.

© Tait Limited July 2017

100 W Base Station

The connections between modules at the front of a 100 W base station are shown below.

100 W base station inter-module connections

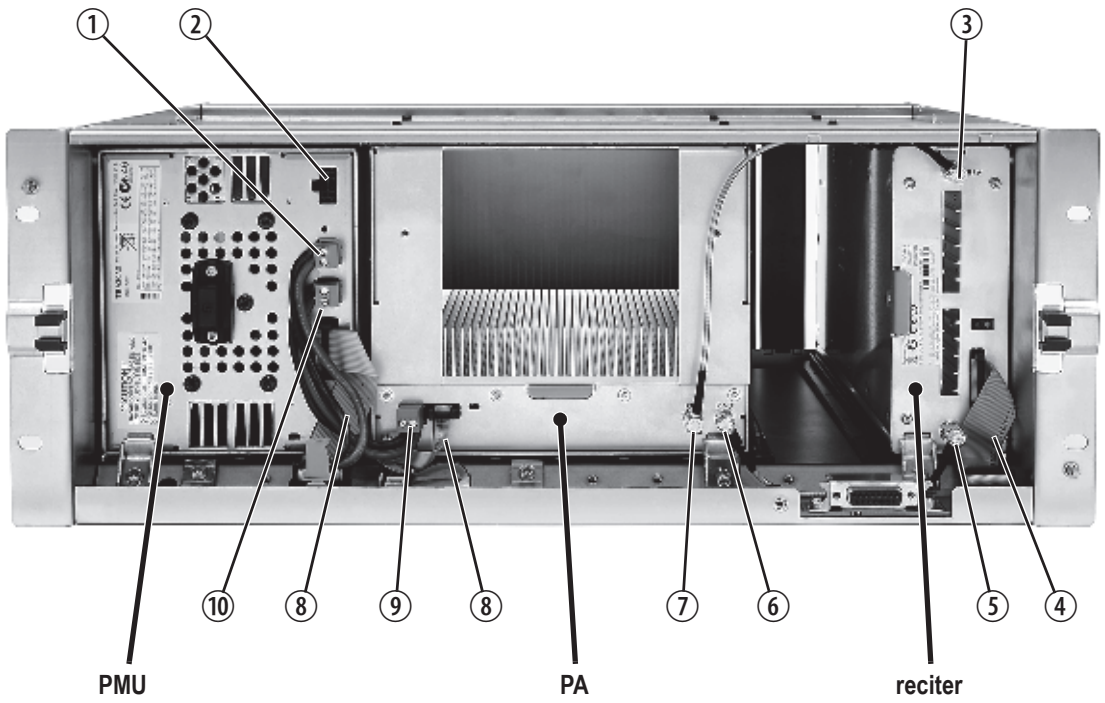

1	28 VDC output to subrack interconnect board	6	transmit forward input
2	not used	7	transmit reverse output
3	transmit reverse input	8	system control bus
4	system control bus and 28 VDC input	9	28 VDC input
5	transmit forward output	10	28 VDC output for PA

DC Supply

The PA is powered by a direct connection from the PMU. The reciter is powered from the PMU via the subrack interconnect board and system control bus ribbon cable.

Receive-only Base Station

The connections between modules at the front of a receive-only base station are shown below. A receive-only base station can have up to four receivers with a PMU.

Receive-only base station inter-module connections

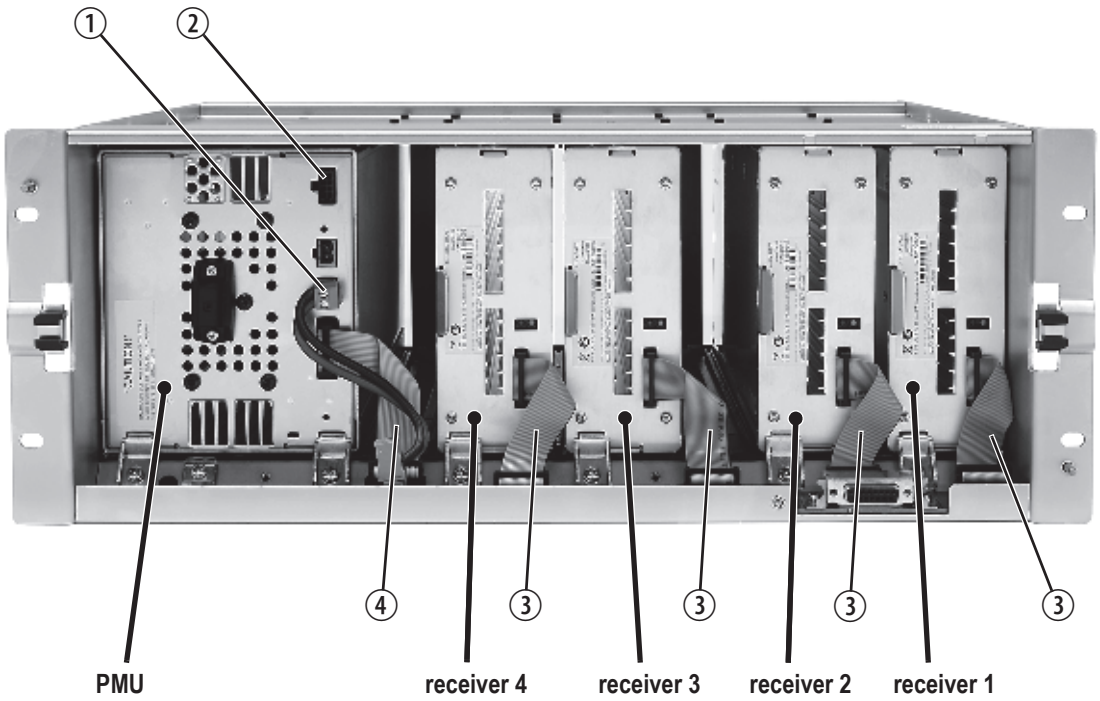

① 28 VDC output to subrack interconnect board

② not used

③ system control bus and 28 VDC input

④ system control bus

DC Supply

The receivers are powered from the PMU via the subrack interconnect board and system control bus ribbon cables.

© Tait Limited July 2017

Appendix C – Identifying Front Panels

You must fit the correct type of front panel to your base station. Each type of base station has a different combination of modules, and must use a front panel fitted with fan ducts that match those modules. Each module, or pair of modules, requires a specific type of fan duct to ensure the cooling air flow passes directly through the modules' heatsinks. The illustration below shows the different front panels and identifies each fan duct by its part number (the xx in the part number indicates the version of the part).

Identifying the different types of front panel

50W base station (single and dual)

fan 1	fan 2	fan 3
reciter 1 and 50W PA 1	reciter 2 and 50W PA 2	PMU
duct: 304-10000-xx	duct: 304-10001-xx	duct: 302-05265-xx

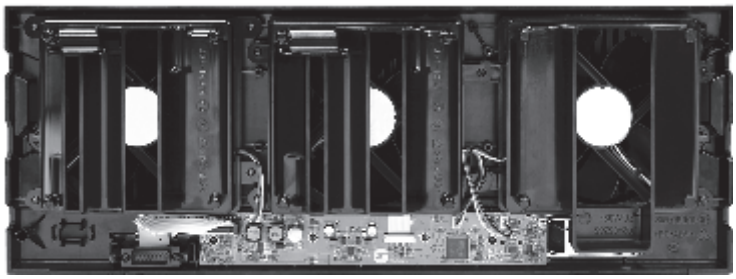

100W base station

fan 1	fan 2	fan 3
reciter	100W PA	PMU
duct: 302-05302-xx	duct: 302-05264-xx	duct: 302-05265-xx

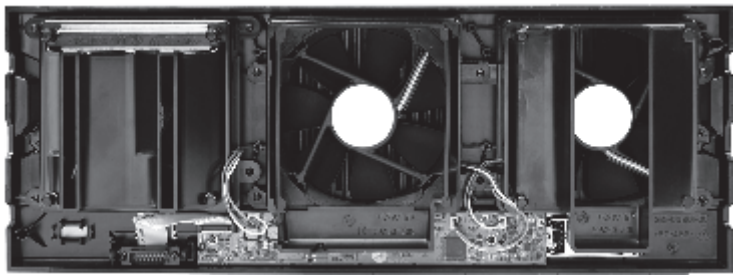

Receive-only base station

fan 1	fan 2	fan 3
receiver 1 and 2	receiver 3 and 4	PMU
duct: 302-05302-xx	duct: 302-05303-xx	duct: 302-05265-xx

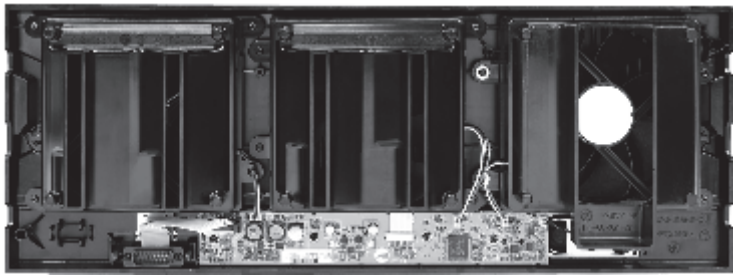

© Tait Limited July 2017

Glossary

This glossary contains an alphabetical list of terms and abbreviations related to the Tait network and the TB9400 base station.

AAA protocols
AAA commonly stands for Authentication, Authorization and Accounting. It refers to an IP-based security architecture that allows centralized, controlled access to devices in a network.

ADC
Analog-to-Digital Converter. A device for converting an analog signal to a digital signal that represents the same information.

AMBE+2™
Advanced Multiband Excitation. A voice compression technology patented by Digital Voice Systems, Inc and used in the vocoders of P25 radios.

ANI
Automatic Number Identification. A service that provides the receiver of a call with a numerical identifier or alphanumeric label of the caller.

APCO
The Association of Public Safety Communications Officials in the United States. The APCO Project 25 standards committee defined the P25 digital radio standard. The standard is often referred to as APCO or P25.

ARP
Address Resolution Protocol is an IP protocol used to map IP network addresses to the hardware addresses used by a data link protocol.

base station
A radio receiver and transmitter that is located in a specific place (at a site) that enables a two-way radio to communicate with a dispatcher or over a larger range with other two-way radios. Specifically, Tait TB9400 equipment in a subrack.

battery protection mode
A PMU enters battery protection mode when it has AC power but its DC power is below the configured power shutdown voltage. In battery protection mode, the PMU will shut down to protect the battery if it loses AC power.

bearer network
Telecom equipment that is used to carry user data.

BER
Bit Error Rate. A measure of the quality of digital transmission, expressed as a percentage. The BER indicates the proportion of errors to correctly received digits in a received signal.

© Tait Limited July 2017

C4FM Compatible Four-level Frequency Modulation. A modulation scheme defined in the P25 CAI standard for 12.5 kHz bandwidth.

CAI Common Air Interface. The over-the-air data formats and protocols defined by the APCO P25 committee.

call A complete exchange of information between two or more parties. A call requires a receive signal path and a transmit signal path. In conventional systems, a call is an over, but in trunked systems, a call may be a conversation, made up of a number of overs.

Cartesian Loop The reciter's RF output is fed to the PA through the transmit forward path. A coupled signal from the PA's RF output is fed back to the reciter through the transmit reverse path. The reciter uses this feedback through a Cartesian Loop to linearize the RF amplification system. Linearization is required to accurately transmit complex waveforms which vary in frequency and amplitude, such as those used in P25 Phase 2.

central voting Voting that is centralized at one member of the channel group.

channel 1. A path through which signals can flow.
2. In the RF domain, a frequency pair (or just a single frequency in a simplex system).
3. One of the two timeslots that P25 Phase 2 provides for each radio frequency (physical channel). Refer to "logical channel".
4. A set of configuration information that defines the frequency pair and other related settings (a channel configuration). "Channel" has this meaning in the web interface.

channel group A single logical channel consisting of a set of base stations. The members of a channel group operate on the same RF frequencies, are linked by an IP network and share a common multicast IP address.

channel profile A named group of configuration settings that help to define the properties of a channel. Each channel in the channel table must have a channel profile assigned to it.

channel spacing The bandwidth that a channel nominally occupies. If a base station has a channel spacing of 12.5 kHz, there must be a separation of at least 12.5 kHz between its operating frequencies and those of any other equipment.

channel table The base station's database of channel configurations.

CODEC A device which combines analog-to-digital conversion (coding) and digital-to-analog conversion (decoding).

© Tait Limited July 2017

community repeater	Repeater that is shared by several user groups.
configuration file	Consists of all the configuration settings needed for a base station, stored as a file.
conventional network	Systems that do not have centralized management of channel access. System operation is entirely controlled by system end users.
CTCSS	CTCSS (continuous tone controlled squelch system), also known as PL (private line), is a type of signaling that uses subaudible tones to segregate groups of users.
CWID	Continuous Wave Identification is a method of automatically identifying the base station using a Morse code. Continuous wave means transmission of a signal with a single frequency that is either on or off, as opposed to a modulated carrier.
DAC	Digital-to-Analog Converter. A device for converting a digital signal to an analog signal that represents the same information.
DDC	Digital Down Converter. A device which converts the digitized IF signal of the receiver down to a lower frequency (complex baseband) to suit the DSP.
dispatcher	A person who gives official instructions by radio to one or more SU users.
dotted quad	A method for writing IPv4 addresses. The form is DDD.DDD.DDD.DDD where DDD is an 8-bit decimal number.
downlink	The transmission path from fixed equipment to SUs.
DSP	Digital Signal Processor.
duplex	Providing transmission and reception in both directions simultaneously.
duty cycle	Used in relation to the PA, it is the proportion of time (expressed as a percentage) during which the PA is transmitting.
EIA	Electronic Industries Alliance. Accredited by the American National Standards Institute (ANSI) and responsible for developing telecommunications and electronics standards in the USA.

© Tait Limited July 2017

EMC	Electromagnetic Compatibility. The ability of equipment to operate in its electromagnetic environment without creating interference with other devices.
ETSI	European Telecommunications Standards Institute. The non-profit organization responsible for producing European telecommunications standards.
failsoft mode	An optional operational mode of Tait P25 trunked networks. It comes into effect when the channel group loses all connection to the trunking site controller. You can select the on-air signaling type to be compatible with previous TB9400 functionality, or to be interoperable with radio fleets from other manufacturers.
FCC	Federal Communications Commission. The FCC is an independent United States government agency that regulates interstate and international radio communications.
feature code	The alphanumeric code used to identify a feature set.
feature set	A function or mode of operation of the base station which can be enabled or disabled using the web interface. Each feature set requires a license to be purchased from Tait before it can be enabled.
feature license key	The unique set of digits belonging to a license which is programmed into the base station to enable a feature set.
fill-in receiver	An additional receiver placed within the coverage area of a base station to receive SU transmissions that are too weak to be received by that base station.
FLASH	Electrically block-erasable and programmable read-only memory.
FM	Frequency Modulation. Often used as an adjective to denote analog radio transmission.
frequency band	The range of frequencies that the equipment is capable of operating on.
front panel	The cover over the front of the base station containing the indicator LEDs, four-line LCD display, user controls and cooling fans.
gating	The process of opening and closing the receiver gate. When a valid signal is received, the receiver gate opens, letting the signal through.

© Tait Limited July 2017

group call A call that is sent to more than one SU simultaneously.

heartbeat message A message whose purpose is to indicate to the receiver that the sender is operational.

hiccup mode Many power supplies switch off in the event of a short-circuit and try to start again after a short time (usually after a few seconds). This “hiccup”-type of switching off and on is repeated until the problem is eliminated.

holdover mode A simulcast base station can enter holdover mode when it loses its 1 PPS pulse. Holdover mode temporarily maintains synchronization by phase-locking the transmit clock to the external frequency reference.

hostname The unique name by which a network element is known on the network.

hub A unit for connecting hosts together. It sends all incoming Ethernet packets to all the other hosts.

hysteresis The difference between the upper and lower trigger points. For example, the receiver unmutes when the upper trigger point is reached, but will mute again until the level falls to the lower trigger point. An adequate hysteresis prevents the receiver gate from repeatedly muting and unmuting when the level varies around the trigger point.

I^2C A bi-directional two-wire serial bus which is used to connect integrated circuits (ICs). I^2C is a multi-master bus, which means that multiple chips can be connected to the same bus, and each one can act as a master by initiating a data transfer. Used in the TB9400 for communications between reciter 1 and the PMU.

impairment A measure of signal quality used in channel group voting. Impairment is inversely related to signal quality. The lowest impairment (0) indicates the highest signal quality. The highest impairment (15) indicates the worst signal quality.

inbound Describes the direction of a signal: from an SU over the air interface to the fixed station.

inhibit A control command that can be sent across the CAI to inhibit an SU. An inhibited SU appears to the user as if it is powered off.

IP Internet Protocol is a protocol for sending data packets between hosts.

© Tait Limited July 2017

isolator A passive two-port device which transmits power in one direction, and absorbs power in the other direction. It is used in a PA to prevent damage to the RF circuitry from high reverse power.

kernel The core executable of an operating system.

LAN Local Area Network. A computer network that interconnects computers in a limited area, such as a single building or group of buildings.

LDU Link Data Unit. Voice calls are sent over the CAI as a series of LDUs.

LED Light Emitting Diode. Also the screen representation of a physical LED.

license Some operational functions of the base station are controlled by licenses. Purchasing a license from Tait allows you to enable the feature set which includes the required functionality.

logical channel One of the two timeslots provided in each TB9400 radio frequency. Each timeslot can function as a separate logical channel, independent of the other timeslot. One radio frequency can therefore carry two separate voice or data streams, one in each timeslot.

LSM Linear Simulcast Modulation is a proprietary modulation scheme designed to give optimal performance in simulcast systems, compared to that obtainable using C4FM.

marshalling duration The length of time that the voice stream needs to travel from the central voter to the furthest channel group member. The fixed marshalling duration parameter includes the time needed to fill the transmit buffer to the required level.

master The channel group master is the member with the control connection to the trunking site controller.

multicast group The group of hosts associated with a specific IP multicast address.

multicast IP address An IP address that refers to a group of hosts rather than a single host. These hosts will all accept packets with this IP address.

mute Prevents audio from being passed to the radio's speaker.

NAC Network Access Code. The 12 most significant bits of the network identifier information that precedes every packet sent on the CAI. The

© Tait Limited July 2017

NAC identifies which network the data belongs to, allowing base stations and mobiles to ignore packets belonging to interfering networks.

NAT Network Address Translation allows the use of a single IP address for a whole network of computers. A NAT sits between the public Internet and the network it serves, and works by rewriting IP addresses and port numbers in IP headers on the fly so the packets all appear to be coming from (or going to) the single public IP address of the NAT device instead of the actual source or destination.

network element Any device that is network-connected. A Tait digital network consists of a number of network elements. The TB9400 base station is a network element designed and manufactured by Tait.

NTP Network Time Protocol is a protocol and software implementation for synchronizing the clocks of computer systems across a network. An NTP server obtains the correct time from a time source and sets the local time in each connected computer.

octet A set of 8 bits.

Offline mode A mode of operation in which active service is suspended so that special operations can be carried out, such as programming in a new configuration or carrying out invasive diagnostic tests.

Online mode The normal operating mode of the base station.

outbound Describes the direction of a signal: from a fixed station over the air interface to an SU.

over A single transmission, which begins when a user presses PTT and ends when the user stops pressing.

P25 Project 25. A suite of standards and requirements endorsed by the TIA and intended for digital public safety radio communications systems.

P25 Phase 2 P25 Phase 2 uses a two-slot TDMA modulation scheme to provide two logical channels (time slots) on one physical 12.5 kHz RF channel.

PA The Power Amplifier is a base station module that boosts the exciter output to the required transmit level.

PCB Printed Circuit Board.

© Tait Limited July 2017

PMU	The Power Management Unit is a module in the base station that provides power to the subrack and monitors power conditions.
preamble	A well-defined signal that is transmitted at the beginning of digital P25 calls to facilitate downlink voting and to allow the transmit buffer to fill.
privileges	A set of access rights to the web interface functions. There are Guest, Maintainer, and Administrator privileges.
Project 25	A project set up by APCO (the Association of Public Safety Communications Officials), together with other US governmental organizations, to develop standards for interoperable digital radios to meet the needs of public safety users.
PSTN	Public Switched Telephone Network: the public telephone network.
PTT	Push To Talk. The button on an SU that keys the transmitter.
QoS	Quality Of Service. A router feature that gives real-time data such as voice calls priority over other data.
receiver number	A unique number assigned to the members of a channel group.
reciter	A module of a base station that provides both receiver and exciter functionality.
repeater talkaround	Allows the SU user to bypass repeater operation and so communicate directly with other SUs. While repeater talkaround is active, all transmissions are made on the receive frequency programmed for the channel.
RISC	Reduced Instruction Set Computer. A type of microprocessor that recognizes a relatively limited number of instructions. The reciter's control board has a RISC microprocessor.
router	A router is an internetwork packet switch that switches data packets from an input interface to an output interface. The interfaces can be of different types.
RS-232	A protocol for serial communications between a DTE (data terminal equipment) and a DCE (data communications equipment) device.
RS-485	An updated version of the RS-232 protocol for serial communications between multiple devices.

© Tait Limited July 2017

RSSI Received Signal Strength Indicator is a level that indicates the strength of the received signal.

RTP Real Time Protocol is an Internet protocol that supports the real-time transmission of voice and data.

Rx Receiver.

satellite voter A channel group member that has delegated voting activity to a central voter.

SAW filter Surface Acoustic Wave filter. A band pass filter that can be used to filter both RF and IF frequencies. A SAW filter uses the piezoelectric effect to turn the input signal into vibrations that are turned back into electrical signals in the desired frequency range.

selectivity The ability of a radio receiver to select the wanted signal and reject unwanted signals on adjacent channels (expressed as a ratio).

sensitivity The sensitivity of a radio receiver is the minimum input signal strength required to provide a usable signal.

signaling profile A named set of configuration items related to signaling that can be applied to any channel.

simplex Able to provide transmission and reception in only one direction at a time.

simulcast The simultaneous broadcast by more than one transmitter of the same signal on the same frequency.

SINAD Signal plus Noise and Distortion is a measure of signal quality. It is the ratio of (signal + noise + distortion) to (noise + distortion). A SINAD of 12 dB corresponds to a signal-to-noise ratio of 4:1.

site 1. The base station equipment at a particular location. This includes power supplies, transmitters, receivers, network interfaces and controllers.
2. The location of that equipment.

skew A measure used in centrally voted channel groups. If a voice stream arrives at the central voter 20 ms later than the first voice stream from the same SU, it is said to have a skew of 20 ms.

SMR Specialized Mobile Radio. A communications system used by police, ambulances, taxis, trucks and other delivery vehicles.

© Tait Limited July 2017

SNMP Simple Network Management Protocol. A protocol used (for example) by the trunking site controller to monitor the status of the channel group and its members.

SSRC Synchronization source. The SSRC is a large number specified by the trunking controller in its connection message. It uniquely identifies voice streams sent from the master base station.

SU Subscriber Unit. The term used in the APCO P25 standard documents for a two-way radio (generally a mobile or a portable radio) conforming to the CAI specifications.

supplementary service A term used in the P25 standards. It refers to a group of services that is additional to the basic service that a telecommunications network provides. Examples include encryption and SU monitoring.

syslog collector A program that can receive, display, and log syslog messages from many devices.

syslog protocol A standard protocol used for the transmission of event notification messages across IP networks. TB9400 base stations can send messages such as alarms to an IP address on the Tait Network. The base station's logs store messages in the syslog format.

system control bus Provides the following physical paths in a TB9400 base station:

- I^2C and RS-485 communications between the modules in the subrack
- fan power from the PMU
- power connections for the reciter and front panel.

TaitNet Brand name for a PMR network designed and manufactured by Tait Limited.

Tait P25 network A set of Tait base stations interconnected by an IP network that can carry voice and data traffic.

TB9400 Base Station A base station consisting of the equipment necessary to receive and transmit on one channel in a P25 Phase 1, P25 Phase 2, or analog network. Generally, this means a reciter, a PA, and a PMU. Often abbreviated to TB9400 or base station.

TCCP Trunking Channel Control Protocol. A proprietary protocol operating over IP for the exchange of channel control messages between a base station and a trunking site controller.

© Tait Limited July 2017

TCP	Transmission Control Protocol. A complex protocol on top of IP for sending reliable streams of data with flow control.
TDMA	Time Division Multiple Access. TDMA divides a single RF channel into multiple time slots (logical channels), with each time slot being transmitted in rapid succession, one after the other. A time slot can be occupied by a single voice or data stream.
TELCO	Telephone company.
TIA	Telecommunications Industry Association
toggle	Describes the switching between two states. If something is on, toggling it turns it off. If it is off, toggling it turns it on.
tone	A sound wave of a particular frequency.
TSBK	A Trunking Signaling Block is an over-the-air message format used in digital P25 mode for setting up trunked calls and for supplementary services such as messaging and status updates.
Tx	Transmitter.
UDP	User Datagram Protocol. A simple protocol on top of IP for sending streams of data.
uninhibit	A control command that can be sent across the CAI to restore an inhibited SU to normal functioning.
uplink	The transmission path from SUs to fixed equipment.
UTC	Coordinated Universal Time (word order from French). An international time standard that has replaced Greenwich Mean Time.
valid signal	A signal that the receiver unmutes to. A signal is valid, for example, when it is strong enough to be decoded and when it has the specified NAC.
voice stream	A digitized voice signal that passes through the main switch.
VoIP	Voice over IP. The name for the technology that puts speech signals in packets and then routes them over an IP backbone network.

© Tait Limited July 2017

voting The systematic sampling of a group of channels for the channel with the greatest signal strength. Voting provides wide-area coverage and ensures that as the user moves throughout the coverage area the strongest channel is always available for a call.

VPN Virtual Private Network. A private communications network used to communicate confidentially over a non-private network.

VSWR Voltage Standing Wave Ratio is the ratio of the maximum peak voltage anywhere on the transmission line to the minimum value anywhere on the transmission line. A perfectly matched line has a VSWR of 1:1. A high ratio indicates that the antenna subsystem is poorly matched.

watchdog A circuit that checks that the system is still responding. If the system does not respond (because the firmware has locked up), the circuit generally resets the system.

© Tait Limited July 2017

Tait Software License Agreement

This Software License Agreement ("Agreement") is between you (“Licensee”) and Tait Limited (“Tait").

By using any of the Software items embedded and pre-loaded in the related Tait Designated Product, included on CD, downloaded from the Tait website, or provided in any other form, you agree to be bound by the terms of this Agreement. If you do not agree to the terms of this Agreement, do not install or use any of the Software. If you install or use any of the Software, that will be deemed to be acceptance of the terms of this Agreement.

For good and valuable consideration, the parties agree as follows:

Section 1 DEFINITIONS

“Confidential Information” means all or any information supplied to or received by Licensee from Tait, whether before or after installation or use and whether directly or indirectly pertaining to the Software and Documentation supplied by Tait, including without limitation all information relating to the Designated Products, hardware, software; copyright, design registrations, trademarks; operations, processes, and related business affairs of Tait; and including any other goods or property supplied by Tait to Licensee pursuant to the terms of this Agreement.

“Designated Products” means products provided by Tait to Licensee with which or for which the Software and Documentation is licensed for use.

“Documentation” means product and software documentation that specifies technical and performance features and capabilities; user, operation, and training manuals for the Software; and all physical or electronic media upon which such information is provided.

“Executable Code” means Software in a form that can be run in a computer and typically refers to machine language, which is comprised of native instructions the computer carries out in hardware. Executable code may also refer to programs written in interpreted languages that require additional software to actually execute.

“Intellectual Property Rights” and **“Intellectual Property”** mean the following or their substantial equivalents or counterparts, recognized by or through action before any governmental authority in any jurisdiction throughout the world and including, but not limited to all rights in patents, patent applications, inventions, copyrights, trademarks, trade secrets, trade names, and other proprietary rights in or relating to the Software and Documentation; including any adaptations, corrections, de-compilations, disassemblies, emulations, enhancements fixes, modifications, translations and updates to or derivative works from, the Software or Documentation, whether made by Tait or another party, or any improvements that result from Tait processes or, provision of information services.

“Licensee” means any individual or entity that has accepted the terms of this License.

“Open Source Software” means software with freely obtainable source code and license for modification, or permission for free distribution.

“Open Source Software License” means the terms or conditions under which the Open Source Software is licensed.

“Person” means any individual, partnership, corporation, association, joint stock company, trust, joint venture, limited liability company, governmental authority, sole proprietorship, or other form of legal entity recognized by a governmental authority.

“Security Vulnerability” means any flaw or weakness in system security procedures, design, implementation, or internal controls that if exercised (accidentally triggered or intentionally exploited) could result in a security breach such that data is compromised, manipulated, or stolen, or a system is damaged.

“Software” (i) means proprietary software in executable code format, and adaptations, translations, de-compilations, disassemblies, emulations, or derivative works of such software; (ii) means any modifications, enhancements, new versions and new releases of the software provided by Tait; and (iii) may contain one or more items of software owned by a third-party supplier. The term "Software" does not include any third-party software provided under separate license or not licensable under the terms of this Agreement.

“Source Code” means software expressed in human readable language necessary for understanding, maintaining, modifying, correcting, and enhancing any software referred to in this Agreement and includes all states of that software prior to its compilation into an executable programme.

“Tait” means Tait Limited and includes its Affiliates.

Section 2 SCOPE

This Agreement contains the terms and conditions of the license Tait is providing to Licensee, and of Licensee’s use of the Software and Documentation. Tait and Licensee enter into this Agreement in connection with Tait delivery of certain proprietary Software and/or products containing embedded or pre-loaded proprietary Software.

Section 3 GRANT OF LICENSE

3.1. Subject to the provisions of this Agreement and the payment of applicable license fees, Tait grants to Licensee a personal, limited, non-transferable (except as permitted in Section 7), and non-exclusive license to use the Software in executable code form, and the Documentation,

© Tait Limited July 2017

solely in connection with Licensee's use of the Designated Products for the useful life of the Designated Products. This Agreement does not grant any rights to source code.

3.2. If the Software licensed under this Agreement contains or is derived from Open Source Software, the terms and conditions governing the use of such Open Source Software are in the Open Source Software Licenses of the copyright owner and not in this Agreement. If there is a conflict between the terms and conditions of this Agreement and the terms and conditions of the any applicable Open Source Software Licenses, the terms and conditions of the Open Source Software Licenses will take precedence. For information about Open Source Components contained in Tait products and the related Open Source licenses, see:
http://support.taitradio.com/go/opensource

Section 4 LIMITATIONS ON USE

4.1. Licensee may use the Software only for Licensee's internal business purposes and only in accordance with the Documentation. Any other use of the Software is strictly prohibited. Without limiting the general nature of these restrictions, Licensee will not make the Software available for use by third parties on a "time sharing," "application service provider," "service bureau" basis, or for any other similar commercial rental or sharing arrangement.

4.2. Licensee will not, and will not directly or indirectly allow or enable any third party to: (i) reverse engineer, disassemble, extract components, decompile, reprogram, or otherwise reduce the Software or any portion thereof to a human perceptible form or otherwise attempt to recreate the source code; (ii) modify, adapt, create derivative works of, or merge the Software; (iii) copy, reproduce, distribute, lend, or lease the Software or Documentation to any third party; (iv) grant any sublicense or other rights in the Software or Documentation to any third party; (v) take any action that would cause the Software or Documentation to be placed in the public domain; (vi) remove, or in any way alter or obscure any copyright notice or other notice of Tait or third-party licensor's proprietary rights; (vii) provide, copy, transmit, disclose, divulge or make the Software or Documentation available to, or permit the use of the Software by, any third party or on any machine except as expressly authorized by this Agreement; or (viii) use, or permit the use of, the Software in a manner that would result in the production of a copy of the Software by any means whatsoever other than what is permitted in this Agreement. Licensee may make one copy of the Software to be used solely for archival, back-up, or disaster recovery purposes; provided that Licensee may not operate that copy of the Software at the same time as the original Software is being operated. Licensee may make as many copies of the Documentation as it may reasonably require for the internal use of the Software.

4.3. Unless otherwise authorized by Tait in writing, Licensee will not, and will not enable or allow any third party to: (i) install a copy of the Software on more than one unit of a Designated Product; or (ii) copy or transfer Software installed on one unit of a Designated Product to any other device. Licensee may temporarily transfer Software installed on a Designated Product to another device if the Designated Product is inoperable or malfunctioning. Temporary transfer of the Software to another device must be discontinued when the original Designated Product is returned to operation and the Software must be removed from the other device.

4.4. Licensee will maintain, during the term of this Agreement and for a period of two years thereafter, accurate records relating to this license grant to verify compliance with this Agreement. Tait, or a third party nominated by Tait, may inspect Licensee's premises, books and records, upon reasonable prior notice to Licensee, during Licensee's normal business hours and subject to Licensee's facility and security regulations. Tait is responsible for the payment of all expenses and costs of the inspection, provided that Licensee shall indemnify Tait for all costs (including audit costs and legal costs on a solicitor client basis) if Licensee has breached the terms of this Agreement. Any information obtained by Tait during the course of the inspection will be kept in strict confidence by Tait and used solely for the purpose of verifying Licensee's compliance with the terms of this Agreement.

Section 5 OWNERSHIP AND TITLE

Tait, its licensors, and its suppliers retain all of their Intellectual Property Rights in and to the Software and Documentation, in any form. No rights are granted to Licensee under this Agreement by implication, estoppel or otherwise, except for those rights which are expressly granted to Licensee in this Agreement. All Intellectual Property developed, originated, or prepared by Tait in connection with providing the Software, Designated Products, Documentation, or related services, remains vested exclusively in Tait, and Licensee will not have any shared development or other Intellectual Property Rights.

Section 6 LIMITED WARRANTY; DISCLAIMER OF WARRANTY

6.1. The commencement date and the term of the Software warranty will be a period of one (1) year from Tait shipment of the Software. If Licensee is not in breach of any obligations under this Agreement, Tait warrants that the unmodified Software, when used properly and in accordance with the Documentation and this Agreement, will be free from a reproducible defect that eliminates the functionality or successful operation of a feature critical to the primary functionality or successful operation of the Software. Whether a defect has occurred will be determined solely by Tait. Tait does not warrant that Licensee's use of the Software or the Designated Products will be uninterrupted, error-free, completely free of Security Vulnerabilities, or that the Software or the Designated Products will meet Licensee's particular requirements. Tait makes

© Tait Limited July 2017

no representations or warranties with respect to any third-party software included in the Software.
6.2 Tait sole obligation to Licensee, and Licensee's exclusive remedy under this warranty, is to use reasonable efforts to remedy any material Software defect covered by this warranty. These efforts will involve either replacing the media or attempting to correct significant, demonstrable program or documentation errors or Security Vulnerabilities. If Tait cannot correct the defect within a reasonable time, then at Tait option, Tait will replace the defective Software with functionally equivalent Software, license to Licensee substitute Software which will accomplish the same objective, or terminate the license and refund Licensee's paid license fee. If Tait investigation of the perceived defect reveals that no such defect in fact exists, Tait may recover its costs in respect of such investigation from Licensee.
6.3. Tait disclaims any and all other warranties relating to the Software or Documentation other than the express warranties set forth in this Section 6. Warranties in Section 6 are in lieu of all other warranties whether express or implied, oral or written, and including without limitation any and all implied warranties of condition, title, non-infringement, merchantability, or fitness for a particular purpose or use by Licensee (whether Tait knows, has reason to know, has been advised of, or is otherwise aware of any such purpose or use), whether arising by law, by reason of custom or usage of trade, or by course of dealing. In addition, Tait disclaims any warranty to any person other than Licensee with respect to the Software or Documentation.

Section 7 TRANSFERS

7.1. Licensee will not transfer the Software or Documentation to any third party without specific prior written consent from Tait. Tait may withhold such consent or at its own discretion make the consent conditional upon the transferee paying applicable license fees and agreeing to be bound by this Agreement.
7.2. In the case of a value-added reseller or distributor of Tait Designated Products, the consent referred to in Section 7.1 may be contained in a Tait Reseller or Tait Distributor Agreement.
7.3. If the Designated Products are Tait vehicle-mounted mobile products or hand-carried portable radio products and Licensee transfers ownership of the Tait mobile or portable radio products to a third party, Licensee may assign its right to use the Software which is embedded in or furnished for use with the radio products and the related Documentation; provided that Licensee transfers all copies of the Software and Documentation to the transferee.
7.4. For the avoidance of any doubt, Section 7.3 excludes TaitNet Infrastructure, or the products listed at any time under network products at: http://www.taitradio.com.
7.5. If Licensee, as a contractor or subcontractor (integrator), is purchasing Tait Designated Products and licensing Software not for its own internal use but for end use only by a Customer, the Licensee may transfer such Software, but only if a) Licensee transfers all copies of such Software and the related Documentation to the transferee and b) Licensee has first obtained from its Customer (and, if Licensee is acting as a subcontractor, from the interim transferee(s) and from the ultimate end user sub license) an enforceable sublicense agreement that prohibits any other transfer and that contains restrictions substantially identical to the terms set forth in this Software License Agreement. Except as stated in the foregoing, Licensee and any transferee(s) authorised by this Section may not otherwise transfer or make available any Tait Software to any third party nor permit any party to do so. Licensee will, on request, make available evidence reasonably satisfactory to Tait demonstrating compliance with all the foregoing.

Section 8 TERM AND TERMINATION

8.1. Licensee's right to use the Software and Documentation will commence when the Designated Products are supplied by Tait to Licensee and will continue for the life of the Designated Products with which or for which the Software and Documentation are supplied, unless Licensee breaches this Agreement, in which case this Agreement and Licensee's right to use the Software and Documentation may be terminated immediately upon notice by Tait.
8.2. Within thirty (30) days after termination of this Agreement, Licensee must certify in writing to Tait that all copies of the Software have been removed or deleted from the Designated Products and that all copies of the Software and Documentation have been returned to Tait or destroyed by Licensee and are no longer in use by Licensee.
8.3. Licensee acknowledges that Tait made a considerable investment of resources in the development, marketing, and distribution of the Software and Documentation and that Licensee's breach of this Agreement will result in irreparable harm to Tait for which monetary damages would be inadequate. If Licensee breaches this Agreement, Tait may terminate this Agreement and be entitled to all available remedies at law or in equity including immediate injunctive relief and repossession of all non-embedded Software and associated Documentation. Licensee shall pay all Tait costs (on an indemnity basis) for the enforcement of the terms of this Agreement.

Section 9 CONFIDENTIALITY

Licensee acknowledges that the Software and Documentation contain proprietary and Confidential Information valuable to Tait and are Tait trade secrets, and Licensee agrees to respect the confidentiality of the information contained in the Software and Documentation.

Section 10 LIMITATION OF LIABILITY

10.1. In no circumstances shall Tait be under any liability to Licensee, or any other person whatsoever, whether in Tort (including negligence), Contract (except as expressly provided in this Agreement), Equity, under any Statute, or otherwise at law for any losses or damages whether general, special, exemplary, punitive, direct,

© Tait Limited July 2017

indirect, or consequential arising out of or in connection with any use or inability of using the Software.

10.2. Licensee's sole remedy against Tait will be limited to breach of contract and Tait sole and total liability for any such claim shall be limited at the option of Tait to the repair or replacement of the Software or the refund of the purchase price of the Software.

Section 11 GENERAL

11.1. COPYRIGHT NOTICES. The existence of a copyright notice on the Software will not be construed as an admission or presumption of publication of the Software or public disclosure of any trade secrets associated with the Software.

11.2. COMPLIANCE WITH LAWS. Licensee acknowledges that the Software may be subject to the laws and regulations of the jurisdiction covering the supply of the Designated Products and will comply with all applicable laws and regulations, including export laws and regulations, of that country.

11.3. ASSIGNMENTS AND SUBCONTRACTING. Tait may assign its rights or subcontract its obligations under this Agreement, or encumber or sell its rights in any Software, without prior notice to, or consent of, Licensee.

11.4. GOVERNING LAW. This Agreement shall be subject to and construed in accordance with New Zealand law and disputes between the parties concerning the provisions hereof shall be determined by the New Zealand Courts of Law. Provided however Tait may at its election bring proceedings for breach of the terms hereof or for the enforcement of any judgment in relation to a breach of the terms hereof in any jurisdiction Tait considers fit for the purpose of ensuring compliance with the terms hereof or obtaining relief for breach of the terms hereof.

11.5. THIRD-PARTY BENEFICIARIES. This Agreement is entered into solely for the benefit of Tait and Licensee. No third party has the right to make any claim or assert any right under this Agreement, and no third party is deemed a beneficiary of this Agreement. Notwithstanding the foregoing, any licensor or supplier of third-party software included in the Software will be a direct and intended third-party beneficiary of this Agreement.

11.6. SURVIVAL. Sections 4, 5, 6.3, 7, 8, 9, 10, and 11 survive the termination of this Agreement.

11.7. ORDER OF PRECEDENCE. In the event of inconsistencies between this Agreement and any other Agreement between the parties, the parties agree that, with respect to the specific subject matter of this Agreement, this Agreement prevails.

11.8. SECURITY. Tait uses reasonable means in the design and writing of its own Software and the acquisition of third-party Software in order to limit Security Vulnerabilities. While no software can be guaranteed to be free from Security Vulnerabilities, if a Security Vulnerability is discovered, Tait will take the steps specified in Section 6 of this Agreement.

11.9. EXPORT. Licensee will not transfer, directly or indirectly, any Designated Product, Documentation or Software furnished hereunder or the direct product of such Documentation or Software to any country for which New Zealand or any other applicable country requires an export license or other governmental approval without first obtaining such license or approval.

11.10. SEVERABILITY. In the event that any part or parts of this Agreement shall be held illegal or null and void by any court or administrative body of competent jurisdiction, such determination shall not affect the remaining terms which shall remain in full force and effect as if such part or parts held to be illegal or void had not been included in this Agreement. Tait may replace the invalid or unenforceable provision with a valid and enforceable provision that achieves the original intent and economic effect of this Agreement.

11.11. CONSUMER GUARANTEES. Licensee acknowledges that the licenses supplied in terms of this agreement are supplied to Licensee in business, and that the guarantees and other provisions of prevailing consumer protection legislation shall not apply.

11.12. WHOLE AGREEMENT. Licensee acknowledges that it has read this Agreement, understands it and agrees to be bound by its terms and conditions. Licensee also agrees that, subject only to the express terms of any other agreement between Tait and Licensee to the contrary, this is the complete and exclusive statement of the Agreement between it and Tait in relation to the Software. This Agreement supersedes any proposal or prior agreement, oral or written, and any other communications between Licensee and Tait relating to the Software and the Designated Products.

© Tait Limited July 2017

Directive 1999/5/EC Declaration of Conformity

da **Dansk**

Undertegnede Tait Limited erklærer herved, at følgende udstyr TBCB1A, TBCB1B, TBCB1X, TBCH1A, TBCH1B, TBCH2A & TBCH2B overholder de væsentlige krav og øvrige relevante krav i direktiv 1999/5/EF.
Se endvidere: www.taitradio.com/eudoc

de **Deutsch**

Hiermit erklärt Tait Limited die Übereinstimmung des Gerätes TBCB1A, TBCB1B, TBCB1X, TBCH1A, TBCH1B, TBCH2A & TBCH2B mit den grundlegenden Anforderungen und den anderen relevanten Festlegungen der Richtlinie 1999/5/EG.
Siehe auch: www.taitradio.com/eudoc

el **Ελληνικά**

Η Tait Limited δηλώνει ότι το TBCB1A, TBCB1B, TBCB1X, TBCH1A, TBCH1B, TBCH2A & TBCH2B συμμορφώνεται προς τις ουσιώδεις απαιτήσεις και τις λοιπές σχετικές διατάξεις της Οδηγίας 1999/5/ΕΚ.
Βλέπε επίσης: www.taitradio.com/eudoc

en **English**

Tait Limited declares that this TBCB1A, TBCB1B, TBCB1X, TBCH1A, TBCH1B, TBCH2A & TBCH2B complies with the essential requirements and other relevant provisions of Directive 1999/5/EC.
See also: www.taitradio.com/eudoc

es **Español**

Por medio de la presente Tait Limited declara que el TBCB1A, TBCB1B, TBCB1X, TBCH1A, TBCH1B, TBCH2A & TBCH2B cumple con los requisitos esenciales y cualesquiera otras disposiciones aplicables o exigibles de la Directiva 1999/5/CE.
Vea también: www.taitradio.com/eudoc

fi **Suomi**

Tait Limited vakuuttaa täten että TBCB1A, TBCB1B, TBCB1X, TBCH1A, TBCH1B, TBCH2A & TBCH2B tyyppinen laite on direktiivin 1999/5/EY oleellisten vaatimusten ja sitä koskevien direktiivin muiden ehtojen mukainen.
Katso: www.taitradio.com/eudoc

fr **Français**

Par la présente, Tait Limited déclare que les appareils TBCB1A, TBCB1B, TBCB1X, TBCH1A, TBCH1B, TBCH2A & TBCH2B sont conformes aux exigences essentielles et aux autres dispositions pertinentes de la directive 1999/5/CE.
Voir aussi: www.taitradio.com/eudoc

it **Italiano**

Con la presente Tait Limited dichiara che questo TBCB1A, TBCB1B, TBCB1X, TBCH1A, TBCH1B, TBCH2A & TBCH2B è conforme ai requisiti essenziali ed alle altre disposizioni pertinenti stabilite dalla direttiva 1999/5/CE.
Vedi anche: www.taitradio.com/eudoc

nl **Nederlands**

Hierbij verklaart Tait Limited dat het toestel TBCB1A, TBCB1B, TBCB1X, TBCH1A, TBCH1B, TBCH2A & TBCH2B in overeenstemming is met de essentiële eisen en de andere relevante bepalingen van richtlijn 1999/5/ EG.
Zie ook: www.taitradio.com/eudoc

pt **Português**

Tait Limited declara que este TBCB1A, TBCB1B, TBCB1X, TBCH1A, TBCH1B, TBCH2A & TBCH2B está conforme com os requisitos essenciais e outras provisões da Directiva 1999/5/CE.
Veja também: www.taitradio.com/eudoc

sv **Svensk**

Härmed intygar Tait Limited att denna TBCB1A, TBCB1B, TBCB1X, TBCH1A, TBCH1B, TBCH2A & TBCH2B står I överensstämmelse med de väsentliga egenskapskrav och övriga relevanta bestämmelser som framgår av direktiv 1999/5/EG.
Se även: www.taitradio.com/eudoc

© Tait Limited July 2017