TB9300 Base Station/Repeater

Installation and Operation Manual

MBC-00008-13 · Issue 13 · June 2016

www.taitradio.com

Contact Information

Tait Communications
Corporate Head Office

Tait Limited
P.O. Box 1645
Christchurch
New Zealand

For the address and telephone number of regional offices, refer to our website: www.taitradio.com

Copyright and Trademarks

All information contained in this document is the property of Tait Limited. All rights reserved.
This document may not, in whole or in part, be copied, photocopied, reproduced, translated, stored, or reduced to any electronic medium or machine-readable form, without prior written permission from Tait Limited.

The word TAIT and the TAIT logo are trademarks of Tait Limited.

All trade names referenced are the service mark, trademark or registered trademark of the respective manufacturers.

Disclaimer

There are no warranties extended or granted by this document. Tait Limited accepts no responsibility for damage arising from use of the information contained in the document or of the equipment and software it describes. It is the responsibility of the user to ensure that use of such information, equipment and software complies with the laws, rules and regulations of the applicable jurisdictions.

Enquiries and Comments

If you have any enquiries regarding this document, or any comments, suggestions and notifications of errors, please contact your regional Tait office.

Updates of Manual and Equipment

In the interests of improving the performance, reliability or servicing of the equipment, Tait Limited reserves the right to update the equipment or this document or both without prior notice.

Intellectual Property Rights

This product may be protected by one or more patents or designs of Tait Limited together with their international equivalents, pending patent or design applications, and registered trade marks: NZ409837, NZ409838, NZ415277, NZ415278, NZ508806, NZ519742/NZ516280, NZ524369, NZ524378, NZ524509, NZ530819, NZ534475, NZ547713, NZ569985, NZ577009, NZ579051, NZ579364, NZ584534, NZ586889, NZ592624, NZ593888, NZ600346, NZ610563, NZ615954, NZ629167, NZ630718, NZ700387, NZ700908, NZ708662, NZ710766, NZ711325, NZ714188, AU2004216984, AU2015215962, AU339127, AU339391, AU2015904806, EU000915475-0001, EU000915475-0002, UK1518031.8, US 8301682, US13/542147, US14/032876, US14/495334, US14/725922, US14/818712, US14/832420, US62/128101, US62/128129, US640974, US640977, US698339, US702666, US7758996, US7937661, US8902804, US9107231.

This product may also be made under license under one or more of the following U.S. Patents: 5,146,497, 5,148,482, 5,164,986, 5,185,795, 5,185,796, 5,271,017, 5,377,229 and 5,502,767.
The AMBE+2™ voice coding Technology embodied in this product is protected by intellectual property rights including patent rights, copyrights and trade secrets of Digital Voice Systems, Inc. This voice coding Technology is licensed solely for use within this Communications Equipment. The user of this Technology is explicitly prohibited from attempting to decompile, reverse engineer, or disassemble the Object Code, or in any other way convert the Object Code into a human-readable form. Protected by U.S. Patents 5,870,405, 5,826,222, 5,754,974, 5,701,390, 5,715,365, 5,649,050, 5,630,011, 5,581,656, 5,517,511, 5,491,772, 5,247,579, 5,226,084 and 5,195,166.

This product includes software developed by the OpenSSL Project for use in the OpenSSL Toolkit (http://www.openssl.org/).

Environmental Responsibilities

Tait Limited is an environmentally responsible company which supports waste minimization, material recovery and restrictions in the use of hazardous materials.

The European Union's Waste Electrical and Electronic Equipment (WEEE) Directive requires that this product be disposed of separately from the general waste stream when its service life is over. For more information about how to dispose of your unwanted Tait product, visit the Tait WEEE website at www.taitradio.com/weee. Please be environmentally responsible and dispose through the original supplier, or contact Tait Limited.

Tait Limited also complies with the Restriction of the Use of Certain Hazardous Substances in Electrical and Electronic Equipment (RoHS) Directive in the European Union.

In China, we comply with the Measures for Administration of the Pollution Control of Electronic Information Products. We will comply with environmental requirements in other markets as they are introduced.

Contents

Preface **7**
Scope of Manual 7
Document Conventions 7
Associated Documentation 8

1 Description **10**
1.1 Features 11
1.2 Modules 12
1.3 Mechanical Assembly 15
1.4 Frequency Bands and Sub-bands 18
1.5 Applications 19
1.6 Licenses 20
1.7 Theory of Operation 21
1.7.1 Signal Paths 23
1.7.2 Online and Offline Modes 23
1.7.3 Intermodule Communications 24
1.7.4 Power Management and Distribution 25
1.7.5 PMU Operation on DC Input 27
1.7.6 Front Panel Fans 30

2 General Safety and Regulatory Information **31**
2.1 Personal Safety 32
2.1.1 Unpacking and Moving the Equipment 32
2.1.2 Lethal Voltages 32
2.1.3 AC Power Connection 33
2.1.4 Explosive Environments 33
2.1.5 High Temperatures 33
2.1.6 LED Safety (EN60825-1) 33
2.1.7 Proximity to RF Transmissions / A proximité des émissions RF 34
2.2 Equipment Safety 35
2.2.1 Installation and Servicing Personnel 35
2.2.2 Preventing Damage to the PA 35
2.2.3 ESD Precautions 35
2.2.4 Anti-tampering Devices 36
2.3 Environmental Conditions 36
2.3.1 Operating Temperature Range 36
2.3.2 Humidity 36
2.3.3 Dust and Dirt 36
2.4 Regulatory Information 37
2.4.1 Distress Frequencies 37
2.4.2 Compliance Standards 37

© Tait Limited June 2016

2.4.3 FCC Compliance . . . 37
2.4.4 Unauthorized Modifications . . . 37
2.4.5 Health, Safety and Electromagnetic Compatibility in Europe . . . 38

3 Operation . . . 39

3.1 Front Panel . . . 40

3.2 Module Indicator LEDs and Switches . . . 44
3.2.1 Reciter . . . 44
3.2.2 PA . . . 46
3.2.3 PMU . . . 47

4 Working with Base Stations from Your PC . . . 49

4.1 PC Recommendations . . . 50

4.2 Connecting Your PC to the Base Station . . . 50
4.2.1 Logging In . . . 51
4.2.2 Setting the IP Address . . . 52
4.2.3 Security Certificates . . . 53
4.2.4 Connecting a Networked PC to a Base Station . . . 54
4.2.5 Troubleshooting Connection Problems . . . 56
4.2.6 Finding a Lost or Forgotten IP Address . . . 56
4.2.7 Setting Up Authentication . . . 57

4.3 Working with the Web Interface . . . 58
4.3.1 Monitoring Operation . . . 59
4.3.2 Viewing Configuration Settings . . . 60
4.3.3 Viewing the Base Station and Network Identity . . . 61

4.4 Basic Tasks . . . 62
4.4.1 User Settings . . . 62
4.4.2 Taking the Base Station Offline . . . 62
4.4.3 Troubleshooting Alarms . . . 62
4.4.4 Working with Configuration Files . . . 63
4.4.5 Setting Up Custom Alarms . . . 63
4.4.6 Disabling the Front Panel Keypad . . . 63
4.4.7 Preparing to Download Firmware . . . 64
4.4.8 Checking for Interference on a Receive Channel . . . 66

5 Installation . . . 67

5.1 Before You Begin . . . 68
5.1.1 Equipment Security . . . 68
5.1.2 Grounding and Lightning Protection . . . 68
5.1.3 Equipment Ventilation . . . 68
5.1.4 Ambient Temperature Sensor . . . 68
5.1.5 Cabinet and Rack Ventilation . . . 69

5.2 Unpacking and Moving the Subrack . . . 71

5.3 Identifying the Equipment . . . 73

5.4 Initial Setting Up . . . 75
5.4.1 Confirming Operation . . . 75
5.4.2 Customizing the Configuration . . . 77

© Tait Limited June 2016

5.4.3 Recommended Configuration Settings 77
5.4.4 Restricted Port Numbers 78
5.4.5 Changing the Root Password. 78
5.4.6 Tuning the Reciter 79

5.5 Installing the Base Station on Site 84
5.5.1 General Installation Advice. 84
5.5.2 Equipment Required 84
5.5.3 Mounting the Subrack 85

5.6 Connecting Up the Base Station 89
5.6.1 Connection Overview 89
5.6.2 Connecting AC Power. 90
5.6.3 Connecting DC Power. 91
5.6.4 Connecting the Auxiliary DC Power Output. 92
5.6.5 Connecting RF. 93
5.6.6 Connecting an External Frequency Reference 94
5.6.7 Ethernet Connection 95
5.6.8 Connecting General Purpose Inputs and Outputs 96

6 Maintenance. 97

7 Troubleshooting 99

8 Replacing Modules 100

8.1 Saving the Base Station's Configuration 101
8.2 Preliminary Disassembly 102
8.3 Replacing a Reciter 104
8.4 Replacing a Power Amplifier. 106
8.5 Replacing a Power Management Unit 108
8.6 Replacing the Module Guide Rails 109
8.7 Replacing the Subrack Interconnect Board 110
8.8 Final Reassembly 111

Appendix A – Interface Pin Allocations 113

System Interface Connector 113
Ethernet Connector. 113
PMU Auxiliary DC Output 113

Appendix B – Inter-Module Connections. 114

Dual 50 W Base Station 114
Single 50 W Base Station 115
100 W Base Station. 116

Glossary 117

© Tait Limited June 2016

Tait Software License Agreement **127**

Directive 1999/5/EC Declaration of Conformity **131**

© Tait Limited June 2016

Preface

Scope of Manual

This manual provides information on installing and operating the TB9300 base station. It is intended for use by experienced technicians familiar with installing and operating base station equipment. It also includes configuration, maintenance and troubleshooting information.

In the following, unless mentioned specifically, this manual will use the term “base station” to mean both base station and repeater.

Document Conventions

The TB9300 base station has a web interface with an accordion menu on the left side of the screen. “Configure > Base Station > Channels” means click Configure in the top-level menu, then in the expanded Configure menu click Base Station, and finally click on the Channels tab on that page.

Within this manual, four types of alerts may be given to the reader. The following paragraphs illustrate each type of alert and its associated symbol.

Warning **This alert is used when there is a hazardous situation which, if not avoided, could result in death or serious injury.**

Caution This alert is used when there is a hazardous situation which, if not avoided, could result in minor or moderate injury.

Notice This alert is used to highlight information that is required to ensure procedures are performed correctly. Incorrectly performed procedures could result in equipment damage or malfunction.

This icon is used to draw your attention to information that may improve your understanding of the equipment or procedure.

© Tait Limited June 2016

Associated Documentation

The following associated documentation for this product is available on the Tait support website.

- TB9300 Specifications Manual (MBC-00009-xx)
- TN9300 DMR Tier 2 Conventional Radio Network System Manual (MNB-00005-xx)
- TN9300 DMR Tier 3 Trunked Radio Network System Manual (MNB-00003-xx)
- TN9300 DMR Radio Network Node Controller Installation Manual (MNB-00001-xx)
- Safety and Compliance Information (MBA-00012-xx)

The characters **xx** represent the issue number of the documentation.

Technical notes are published from time to time to describe applications for Tait products, to provide technical details not included in manuals, and to offer solutions for any problems that arise. Technical notes are available in PDF format from the Tait support website. For more information contact your regional Tait office.

© Tait Limited June 2016

Issue	Publication Date	Description
1	July 2012	First release
2	October 2012	General updates for version 1.05 release. Information added on compliance standards, firmware download procedure, reciter and PA product codes.
3	June 2013	General updates for version 1.15 release and the K-band base station.
4	August 2013	General updates for version 1.20 release and the H-band base station.
5	November 2013	General updates for version 1.25 release.
6	April 2014	General updates for version 1.30 release. PMU fan thresholds updated. Information added on proximity to RF transmissions, AAA Authentication, and checking for interference on a receive channel.
7	August 2014	General updates for version 1.35 release and the H3-band base station.
8	November 2014	General updates for version 1.40 release and the L2-band base station.
9	March 2015	General updates for version 2.00 release, the DMR Tier 2 conventional base station, and B2-band.
10	July 2015	General updates for version 2.05 release. Information added for: ■ uploading security certificates ■ setting alarm severity ■ external frequency reference stability requirements
11	November 2015	General updates for version 2.10 release. Information added for HC band and analog base stations. Feature license names updated.
12	March 2016	General updates for version 2.15 release. Information added for G-band. Clarification of repeater vs. base station for K and L bands in Brazil added.
13	June 2016	General updates for the 2.20 release. Information reworded in some areas. MPT feature added. Title bar screen image updated.

© Tait Limited June 2016

1 Description

The Tait TB9300 base station is a robust state-of-the-art digital fixed station that combines Tait's proven strengths in reliability, high performance and modular design with software-based configurability and operation, digital signal processing and voice-over-IP technology.

The base station operates as a transceiver in trunked DMR or MPT networks, and as a repeater in DMR or analog conventional networks. In a DMR or MPT trunked network, the TB9300 provides control channel and traffic channel functions, including stand-alone operation in fallback mode.

The TB9300 operates as a simple, conventional analog repeater with CTCSS[1] subaudible signaling[2].

The base station combines industry-leading digital voice quality with rugged design specifications and intuitive user interfaces. These products have been designed to meet the demanding needs of professional radio users.

The ability of the base station to link stations using standard Internet Protocol communications, and to add features through software options ensures that systems designed with the TB9300 are scalable in both size and functionality.

Its Ethernet interface provides built-in network connectivity. This network supports voice-over-IP in DMR networks, and remote management of all base stations via a web browser.

1. Private Line (PL).
2. Multi-site operation with voice-over-IP connection will be supported in a later release.

© Tait Limited June 2016

1.1 Features

The following are some of the features of the base station:

- Fully compliant with the DMR Tier 2 and Tier 3 Standards.
  Can therefore interoperate with any similarly compliant radios.
- Analog conventional repeater operation.
- MPT operation as control channel or traffic channel transceiver in MPT/IP network including standalone operation.
- Can be completely managed remotely from a PC running a web browser: configuration, alarm monitoring, fault diagnosis, feature and firmware upgrades. Alarms can also be reported via SNMP traps, allowing integration with an SNMP-based network management system.
- An integrated wiring solution is provided for the system control bus and DC power connections to each module in the subrack.
- Reciters (receiver/exciter modules) can be replaced without affecting the operation of other reciters in the same subrack.
- Rugged construction with generous heatsinks and fan-forced cooling for continuous operation from –22°F to +140°F (–30°C to +60°C).

© Tait Limited June 2016

1.2 Modules

The base station consists of a subrack with up to two physical transmit/receive channels.

The single PMU (power management unit) supplies and manages power to the whole subrack (refer to "Theory of Operation" on page 21). One reciter and one PA (power amplifier) are needed for each physical transmit/receive channel. There is also a front panel with user controls and fans. The modules are interconnected at the front of the subrack. External connections to the modules are located at the rear.

Modules come in different variants depending, for example, on the RF band or the supply voltage.

Each module is inserted into the 4U subrack from the front and is secured at the front with a metal clamp. Both clamp and module are easily removed for rapid module replacement. The modules are secured laterally with plastic guides that clip into the top and bottom of the subrack. These guides can be easily repositioned to change the configuration of a subrack. The heavier modules are also secured laterally by metal tabs at the rear of the subrack.

The following provides a brief description of the available modules.

Subrack

The 4U subrack is made of passivated steel and is designed to fit into a standard 19 inch rack or cabinet. The subrack is fitted with an interconnect board that connects the system control bus and power to the modules and front panel. The position of a module in the subrack is defined by the socket on the subrack interconnect board to which the module is connected by the system control bus.

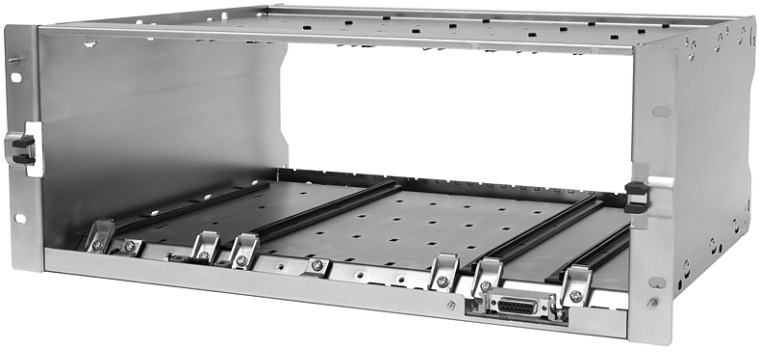

© Tait Limited June 2016

Front Panel

The front panel is mounted onto the subrack with two quick-release fasteners. It incorporates the indicator LEDs, four-line LCD display, user controls, ambient temperature sensor and cooling fans.

The indicator LEDS allow some monitoring of the operational status of the base station. The user controls and display allow the technician to configure the IP address of each module. Refer to "Front Panel" on page 40 for more information.

ⓘ The microphone input and speaker are not used in this release of the TB9300.

Reciter

The reciter module comprises the receiver, exciter and digital control circuitry. The reciter provides the Ethernet interface and system inputs and outputs.

Power Amplifier

The PA amplifies the RF output from the reciter and is available in 50 W and 100 W models.

The 50 W model mounts vertically in the subrack, while the 100 W model mounts horizontally as it has a wider heatsink. The 100 W PA is also fitted with an airflow duct.

50 W PA

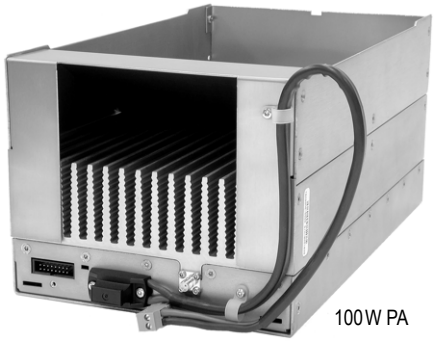

100 W PA

Both models are designed to operate on the 28 VDC output provided by the PMU.

Power Management Unit

The PMU provides the 28 VDC power supply for the modules in the subrack. It can operate on 120/230 VAC 50/60 Hz nominal, and 12, 24 or 48 VDC nominal. The input voltage can be AC, DC, or both AC and DC, depending on the model. The PMU also has an auxiliary DC output of 13.65 VDC, 27.3 VDC, or 54.6 VDC, depending on the model.

AC and DC PMU shown

© Tait Limited June 2016

1.3 Mechanical Assembly

This section illustrates the main mechanical components of the base station.

Figure 1.1 below shows the configuration for a typical dual 50W base station. The subrack has six slots, numbered from right to left as viewed from the front of the subrack. The PMU occupies slots 5 and 6, with the reciters in slots 1 and 2. The two PAs are mounted vertically in slots 3 and 4 with the heatsinks facing each other. The airflow separator between the PAs helps to direct the cooling airflow evenly through each heatsink. The PMU and each pair of reciters and PAs have their own cooling fans.

The front panel can be easily removed from the subrack by undoing two quick-release fasteners. Refer to "Replacing Modules" on page 100 for more details.

Figure 1.1 Mechanical assembly - dual 50W base station with front panel

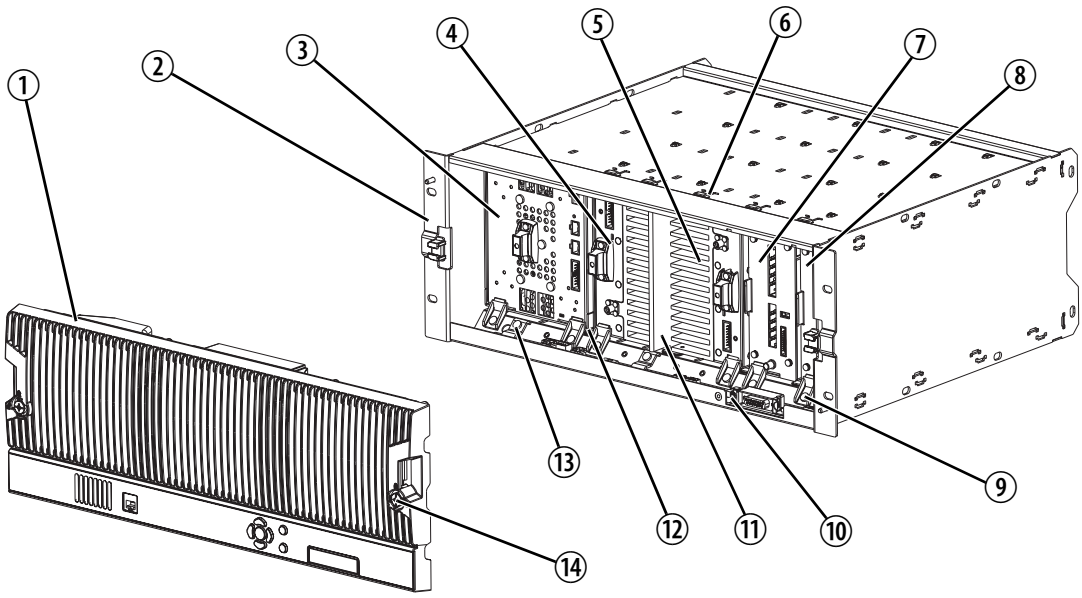

1. front panel
2. subrack
3. PMU
4. PA 2
5. PA 1
6. cable retaining clip
7. reciter 2
8. reciter 1
9. module retaining clamp
10. subrack interconnect board
11. airflow separator
12. plastic guide rail
13. subrack interconnect board retaining clamp
14. front panel fastener

Figure 1.2 below shows the configuration for a typical single 50W base station. The PMU again occupies slots 5 and 6, with the reciter in slot 1 and the PA in slot 3. The single PA is mounted vertically with the heatsink facing the center of the subrack. This positions the cooling fins directly behind the fan.

Figure 1.2 Mechanical assembly - single 50W base station

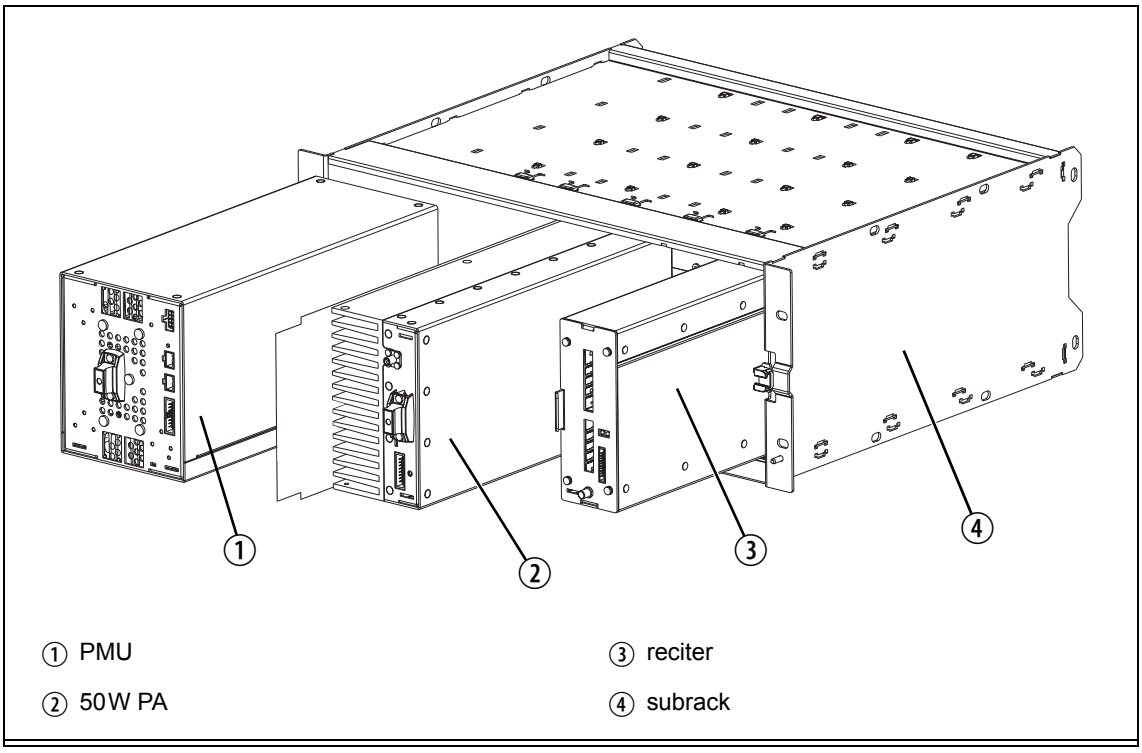

© Tait Limited June 2016

Figure 1.3 below shows the configuration for a typical 100 W base station. The PMU occupies slots 5 and 6, with the PA directly beside it in slots 3 and 4. The reciter occupies slot 1. Unlike the 50 W PAs, the 100 W PA is mounted horizontally with the heatsink facing upwards. It is also fitted with an airflow duct to channel the airflow from the cooling fan through the heatsink fins.

Figure 1.3 Mechanical assembly - single 100 W base station

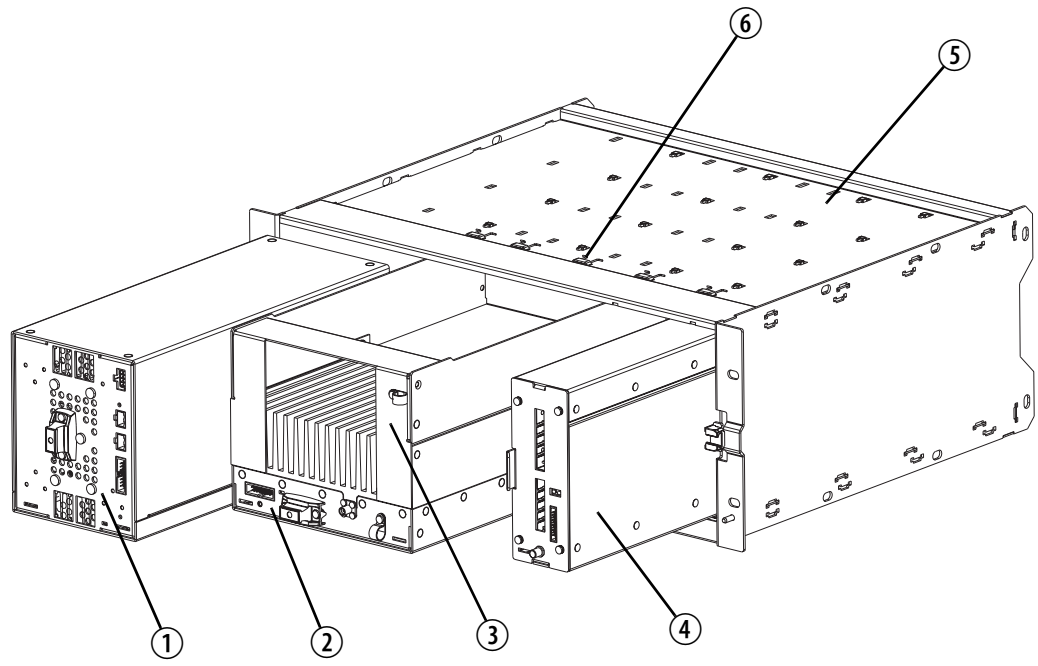

① PMU
② PA
③ airflow duct
④ reciter
⑤ subrack
⑥ cable retaining clip

1.4 Frequency Bands and Sub-bands

Much of the circuitry in the base station is common to all frequency bands, and is therefore covered by a single description in this manual. In some cases the descriptions refer to specific bands or sub-bands, and these are identified with the letters listed in the following table.

Frequency Identification	Frequency Band and Sub-band	50W	100W
B band	B2 = 136MHz to 156MHz B3 = 148MHz to 174MHz	✓	✓
G band	G4 = 330MHz to 380MHz	✓	
H band	H1 = 400MHz to 440MHz H2 = 440MHz to 480MHz H3 = 470MHz to 520MHz	✓	✓
	HC = 400MHz to 440MHz (receive) HC = 440MHz to 480MHz (transmit)	✓	
K band	K4 = 762MHz to 870MHz[a]	✓	✓
L band	L2 = 896MHz to 902MHz (receive) L2 = 927MHz to 941MHz (transmit)		✓

a. The actual frequency coverage in this band is:

Transmit: 762MHz to 776MHz, and 850MHz to 870MHz
Receive: 792MHz to 824MHz

In Brazil, for K and L bands, the TB9300 is considered to be configured as a base station with retransmission of receive frequencies.

© Tait Limited June 2016

1.5 Applications

The TB9300 is designed for operation in a Tait TN9300 DMR Tier 2 conventional radio network, a Tait TN9300 DMR Tier 3 trunked radio network, or as an analog conventional repeater.

In a DMR Tier 2 conventional network it can operate as a stand-alone repeater, or as a member of a multi-site system (under the supervision of a DMR conventional node). Since DMR provides two logical channels (timeslots) simultaneously for each radio frequency (physical channel), two users can alternately access the same frequency, one in each timeslot. Base stations on different sites can be linked together to form channel groups. A base station can support two channel groups, one in each timeslot.

In a DMR Tier 3 trunked network it can operate as a traffic channel or a control channel. With two logical channels for each radio frequency, a single TB9300 base station can provide two traffic channels, two control channels, or both a traffic channel and a control channel. In an MPT network, the TB9300 operates as a control channel or as a traffic channel, both with standalone operation.

In analog operation it can operate as a conventional repeater with CTCSS[1] subaudible signaling[2].

For more information, refer to the DMR System Manual.

1. Private Line (PL).
2. Multi-site operation with voice-over-IP connection will be supported in a later release.

© Tait Limited June 2016

1.6 Licenses

Some operational functions of the base station are controlled by licenses. These functions will not work unless you purchase the appropriate feature license and enable the feature set controlled by that license. The feature sets currently available are listed below.

The base stations in a Tait DMR Tier 3 Network are controlled by a node (DMR trunking controller). Tait sells three types of node: Full, Express and Access. Each type of node has different capabilities. Refer to TN-2134 for more information.

Analog Air Interface (TBAS301 - Default Licence)

A base station with this license can operate as an MPT transceiver or an analog conventional repeater.

DMR Trunking Full (TBAS300)

A base station with this license can accept connections from any node/standalone node[1]. In single-site trunking and fallback modes, this license entitles a standalone node to control a single site of up to 20 physical channels.

DMR Trunking Express (TBAS302)

A base station with this license can accept connections from any Express node/standalone node or Access standalone node. In single-site trunking and fallback modes, this license entitles a standalone node to control a single site of up to 20 physical channels.

DMR Trunking Access (TBAS303)

A base station with this license can accept connections only from an Access standalone node. This license entitles a standalone node to control a single site of up to four physical channels.

DMR Conventional (TBAS304)

A base station with this license can operate in a Tait DMR Tier 2 conventional network. It can operate as a standalone repeater, or as a member of a multi-site system (under the supervision of a DMR conventional node).

A base station with both a DMR Conventional license and a valid DMR trunking license (such as Full, Express or Access) can be configured to operate in either mode. This enables a DMR Tier 2 base station to be reconfigured and re-used in a DMR Tier 3 trunked network.

1. The base station itself can act as a DMR trunking controller, but with limited functionality. The base station is then said to be a standalone node.

© Tait Limited June 2016

1.7 Theory of Operation

The reciter receives RF signals from its RF input and sends RF from its RF output to the PA, along with a PA key signal. The reciter also receives signals from, and sends signals to, the system interface, the Ethernet interface, and the front panel (see Figure 1.4).

A system control bus interconnects the modules and carries alarm and control signaling between the reciter and the other modules (refer to "Intermodule Communications" on page 24 for more details).

The Ethernet interface carries voice over IP and also allows maintainer access via a web browser.

Figure 1.4 Base station high-level diagram

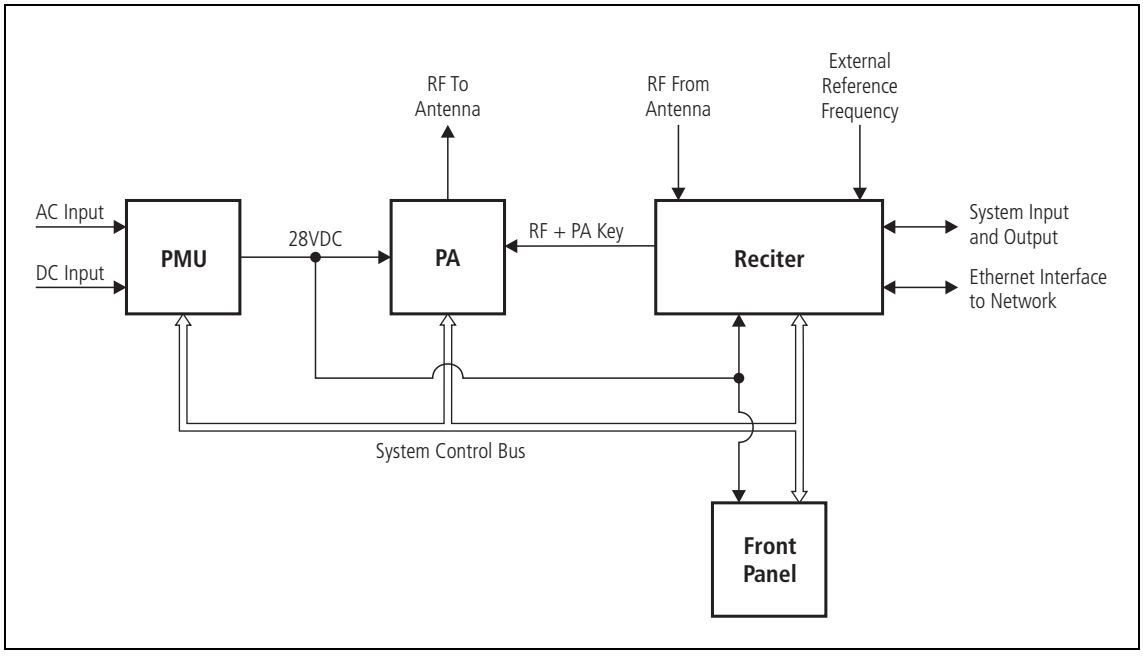

© Tait Limited June 2016

The reciter carries out signal processing and has overall control of the base station. Its circuit boards are shown in Figure 1.5.

Figure 1.5 Reciter boards

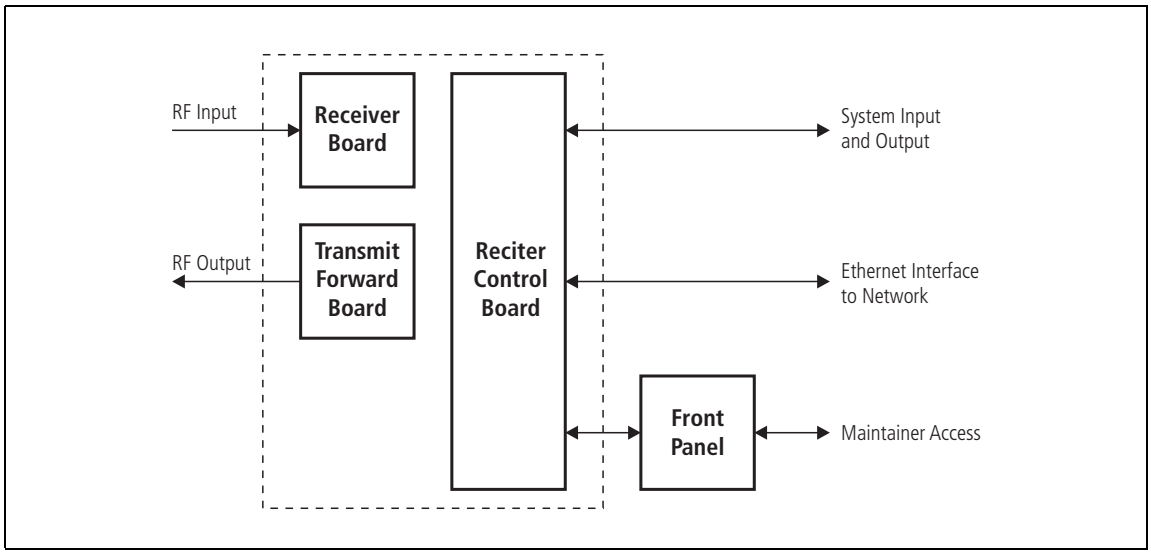

The receiver board contains all the receiver circuitry, while the exciter circuitry is located on the transmit forward board.

The reciter control board converts information between analog and digital and controls the maintainer's access via the front panel. It performs the air interface signal processing for digital DMR operation, gives the base station an identity as a network element, and provides the physical connections for the Ethernet and system interfaces.

© Tait Limited June 2016

1.7.1 Signal Paths

Figure 1.6 gives an overview of signal paths within the reciter.

Figure 1.6 Reciter signal paths

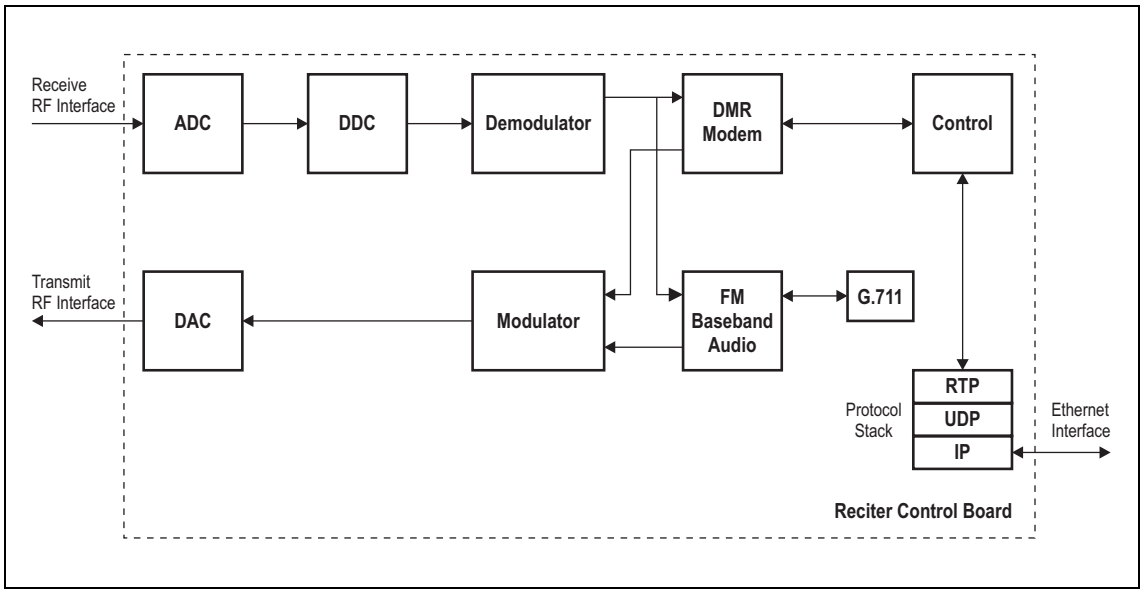

Digital DMR signals from the receive RF interface pass through the digital receiver and DMR modem to the control software in the RISC processor. The control software passes the signal through the Ethernet interface to the node controller.

Input to the Ethernet interface is from the node controller. This input is processed by the RISC and passed through the DMR modem to the transmitter.

Analog FM signals from the receive RF interface pass through the digital receiver and are converted to G.711 before being modulated and retransmitted.

1.7.2 Online and Offline Modes

The base station normally operates in Online mode, but you can put it into Offline mode via its web interface.

Online Mode

In Online mode, the base station performs its normal functions.

Offline Mode

Some procedures, such as activating firmware or running certain diagnostic tests, require the base station to be in Offline mode. This takes the base station out of service. However, the front panel is still operational and can be used in the normal way.

1.7.3 Intermodule Communications

A system control bus and a subrack interconnect board link the modules in the subrack and carry alarm and control signaling between the reciter and the other modules, as shown in Figure 1.7.

Specific configuration settings for dual base stations are described in "Recommended Configuration Settings" on page 77.

Figure 1.7 Intermodule communication paths

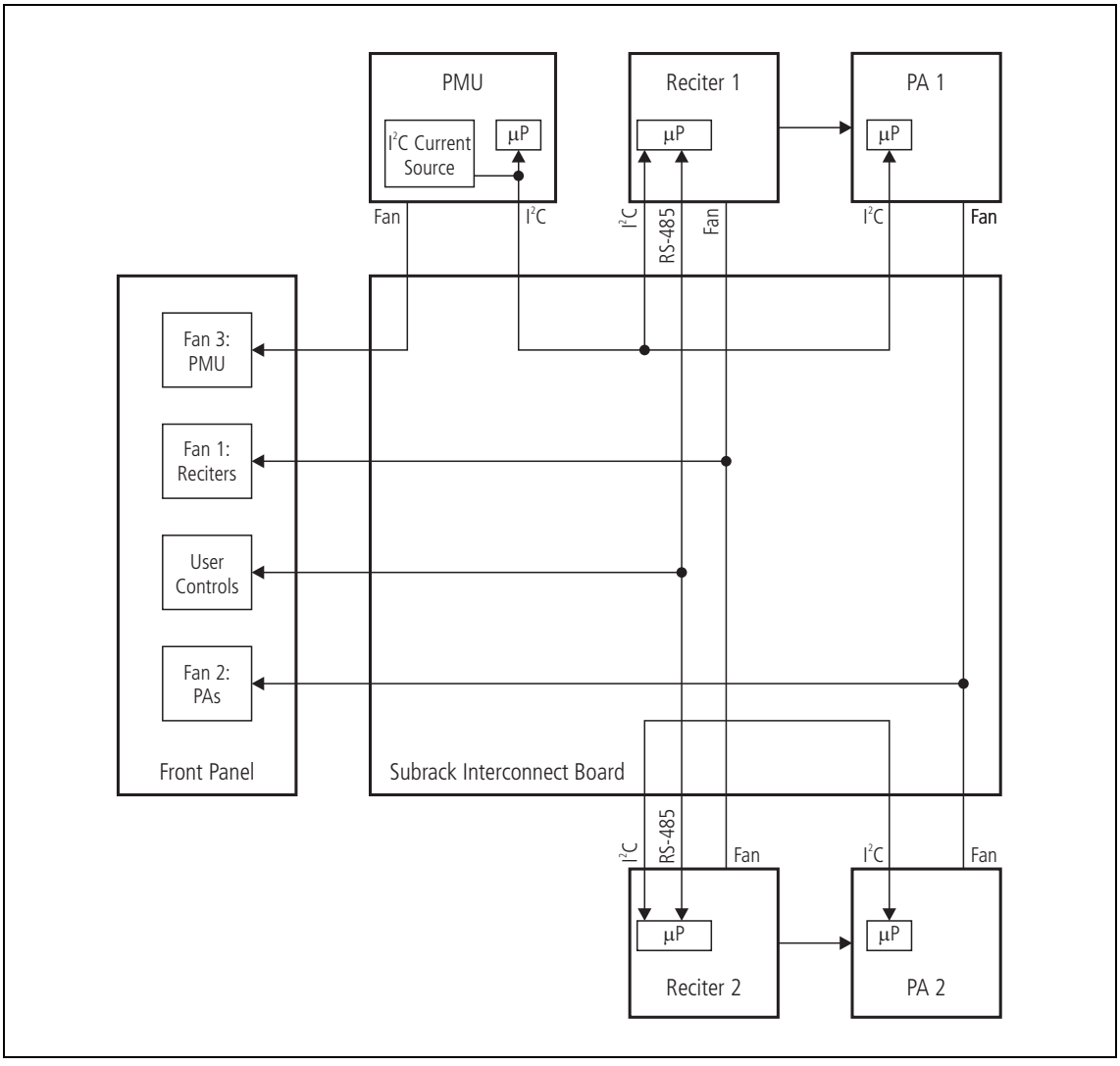

© Tait Limited June 2016

1.7.4 Power Management and Distribution

The PMU manages the supply of power to ensure uninterrupted operation of the base station. A range of parameters is monitored and these can trigger alarms that are sent to the reciter. Alarms can be monitored via the web interface and reported via SNMP traps; they are also recorded in the reciter's internal log file.

AC to DC Changeover

When the PMU has an AC and a DC module, the base station can be powered by either the AC (mains) or the DC (battery) supply. The base station will default to the AC supply if both supplies are provided. If the AC supply becomes unavailable, a seamless changeover from the AC to DC supply takes place, providing that the battery voltage is above the configured minimum startup voltage. You can use a web browser to check whether the base station is running on battery or mains power.

DC Operation

When the base station is running off the DC supply and the battery voltage falls below the configured minimum, the base station will enter battery protection mode to protect the battery and base station equipment. The standby power supply card maintains the power to the PMU microprocessor, while the rest of the PMU is shut down. When the battery voltage rises to the configured startup setting, power is resumed to the DC supply. Refer to "PMU Operation on DC Input" on page 27 for more detailed information.

Auxiliary Power Control

The output from the auxiliary power supply board can be used to power other site equipment. The maximum output is 40 W.

Distribution

Figure 1.8 shows how power is distributed to modules in the subrack. The 28 VDC output from the PMU is fed directly to the PA in a single base station, or directly to PA 1 in a dual base station, and to the other modules via the subrack interconnect board. Power to the reciters and front panel is current-limited by self-resetting fuses on the subrack board.

The AC converter has a series switch which breaks the phase input to the converter. The DC input, however, has much higher current ratings. Its switch does not disconnect power from the DC converter itself, but disables the converter by switching off its control circuitry.

The outputs from both the AC and DC high power converters are added together and fed to the modules via the high-current outputs. The auxiliary output is also tapped off this summed output.

© Tait Limited June 2016

Figure 1.8 Subrack power distribution

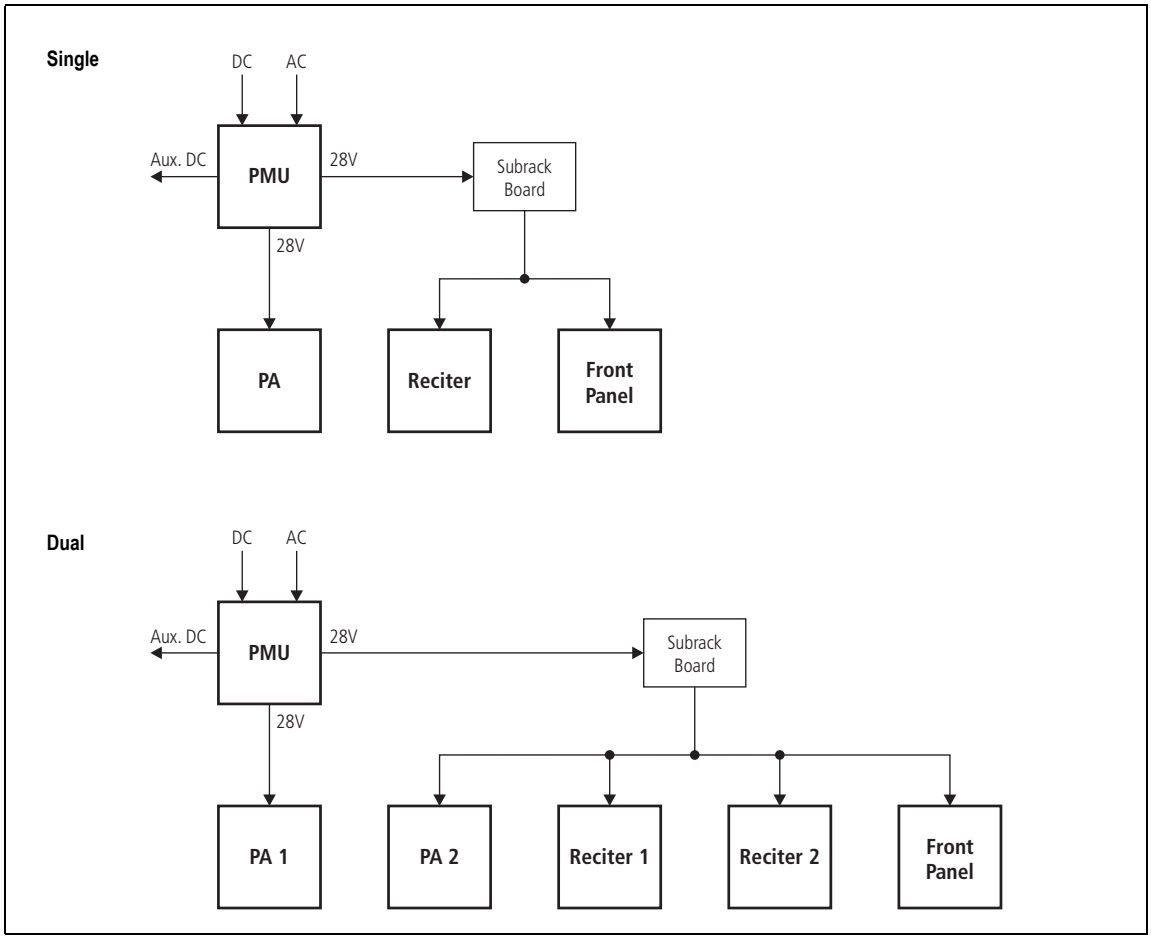

© Tait Limited June 2016

1.7.5 PMU Operation on DC Input

The operation of the PMU on DC input is controlled by three sets of parameters:

- user-programmable alarms
- user-programmable startup and shutdown limits
- battery protection limits

The voltage range for each of these parameters is provided in Table 1.1 on page 28. Figure 1.9 on page 29 illustrates how these parameters interact, and how they control the operation of the PMU over a range of DC input voltages.

Alarms

User-programmable alarms can be set for low or high battery voltage (Configure > Alarms > Thresholds). The alarms will be triggered when the set voltage levels are reached. These limits are subject to the tolerances of the battery protection circuitry, as stated in "Battery Protection (Fail-safe) Limits" in Table 1.1.

Startup and Shutdown Limits

The user-programmable startup and shutdown limits allow for adjustable startup and shutdown voltages (Configure > Base Station > Miscellaneous). These limits can be adjusted for different numbers of battery cells, or for the particular requirements of the base station operation. Once the limits are reached, the PMU will shut down. These limits are subject to the tolerances of the battery protection circuitry, as stated in "Battery Protection (Fail-safe) Limits" in Table 1.1.

> **Notice** It is possible to set the startup voltage of the base station below the nominal voltage of the battery. Continuing to use a battery for extended periods when it is below its nominal voltage will severely shorten its service life. For more information on battery management, we recommend that you consult the battery manufacturer.

Battery Protection Limits

The battery protection limits are set in hardware at the factory, and cannot be adjusted by the user. These limits will not be reached under normal operation conditions, but are provided as "fail-safe" measures to protect the battery from deep discharge. They also remove the need for low-voltage disconnect modules.

© Tait Limited June 2016

Table 1.1 PMU DC voltage limits[a]

Parameter	Voltage Range		
	12V PMU	**24V PMU**	**48V PMU**
User-programmable Alarms[b]			
Low Battery Voltage	10V to 14V	20V to 28V	40V to 56V
High Battery Voltage	14V to 17.5V	28V to 35V	56V to 70V
User-programmable Limits[b]			
Startup Voltage (after shutdown)	10.9V to 15V ±0.3V	21.8V to 30V ±0.5V	43.6V to 60V ±1V
Shutdown Voltage	10V to 13.5V ±0.3V	20V to 27V ±0.5V	40V to 54V ±1V
Battery Protection (Fail-safe) Limits			
Startup Voltage	10.8V ±0.2V	21.6V ±0.5V	43.2V ±1V
Undervoltage Shutdown	9.5V ±0.3V	19V ±0.5V	38V ±1V
Overvoltage Shutdown	18.1V ±0.3V	36.2V ±0.5V	72.4V ±1V
Overvoltage Shutdown Reset	17.1V ±0.3V	34.2V ±0.5V	68.4V ±1V

a. The information in this table is extracted from the Specifications Manual. Refer to the latest issue of this manual for the most up-to-date and complete PMU specifications.

b. Using the base station's web interface.

© Tait Limited June 2016

Figure 1.9 PMU alarm thresholds and voltage limits when operating on DC

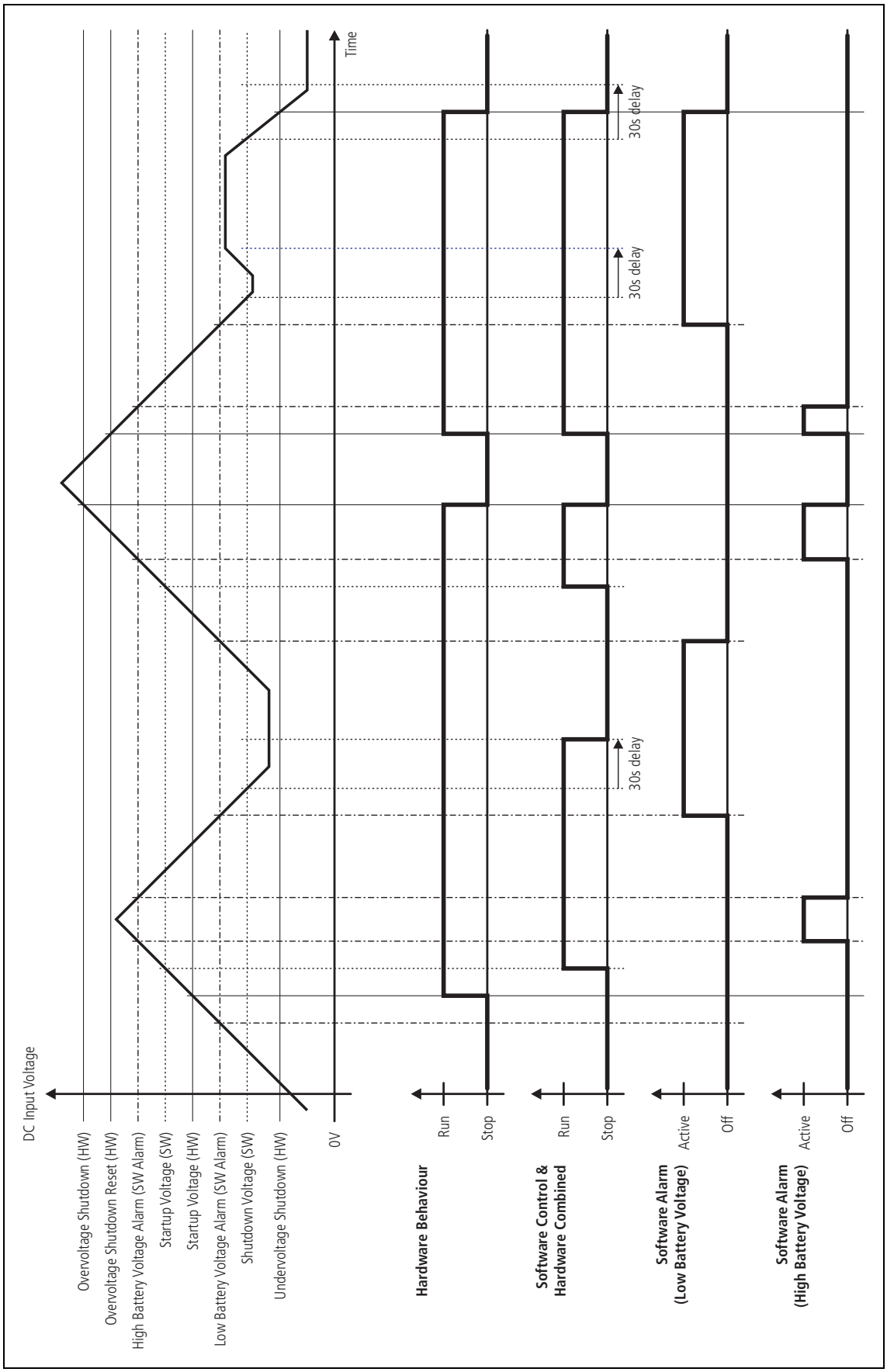

© Tait Limited June 2016

1.7.6 Front Panel Fans

The front panel is equipped with three fans. Fan 1 is for the reciters, fan 2 is for the PAs, and fan 3 is for the PMU. Front panel fans do not operate continuously, but are switched on and off as needed by their associated module. In a dual base station either PA or reciter can turn on its fan. The reciter in slot 1can also carry out a fan test on all three fans.

Front panel fans are 3-wire fans (power, ground, and rotation detect). The reciter can monitor whether the fans are rotating and generate an alarm if the fan fails.

The fans turn on for a few seconds when the base station is powered up, and also after the front panel is refitted to a base station which is powered up.

Configuring Fan Control

The operation of the PA fan is configurable via the web interface; you can specify the threshold temperature at which the fan will be turned on, and set the fan to operate only when the PA is transmitting.

The PMU fan has fixed on/off thresholds and a defined set of duty cycles based on the PMU temperature and load current, as described in the following table.

PMU Temperature	Current	Fan Duty Cycle
<149°F (65°C)	<4A 4A–6A 6A–8A 8A–12A 12A–14A ≥15A	always off 2 minutes on, 8 minutes off 2 minutes on, 5 minutes off 3 minutes on, 3 minutes off 4 minutes on, 1 minute off always on
>149°F (65°C)	—	always on

© Tait Limited June 2016

2 General Safety and Regulatory Information

This chapter provides general information on safety precautions for operating the base station.

2.1 Personal Safety

2.1.1 Unpacking and Moving the Equipment

To prevent personal injury and equipment damage, we recommend that two people unpack and move the equipment.

Caution A subrack complete with modules can weigh up to 62 lb (28 kg), or up to 66 lb (30 kg) complete with packaging. We recommend that you have another person help you unpack and move the equipment. The TBAA03-16 carrying handles will make it easier to move the equipment once it has been unpacked. If necessary, remove the modules from the subrack before moving it (refer to "Replacing Modules" on page 100). In all cases follow safe lifting practices.

2.1.2 Lethal Voltages

Warning **The PMU contains voltages that may be lethal. Refer to the ratings label on the rear of the module.**

The equipment must be installed so that the rear of the PMU is located in a service access area which is accessible only by qualified personnel. The PMU must be connected to the mains supply source by qualified personnel in accordance with local and national regulations.

Disconnect the mains IEC connector and wait for five minutes for the internal voltages to self-discharge before dismantling. The AC power on/off switch does not isolate the PMU from the mains. It breaks only the phase circuit, not the neutral.

The PMU should be serviced only by qualified technicians. There are no user-replaceable parts inside. If the PMU is damaged and does not function properly, stop the module safely and contact your regional Tait office immediately.

All servicing should be carried out only when the PMU is powered through a mains isolating transformer of sufficient rating.

© Tait Limited June 2016

2.1.3 AC Power Connection

English (en)	The PMU must be connected to a grounded mains socket-outlet.
Norsk (no)	Apparatet må tilkoples jordet stikkontakt.
Suomi (fi)	Laite on liitettävä suojamaadoitus-koskettimilla varustettuun pistorasiaan.
Svenska (sv)	Apparaten skall anslutas till jordat uttag.

2.1.4 Explosive Environments

Warning **Do not operate the equipment near electrical blasting caps or in an explosive atmosphere. Operating the equipment in these environments is a definite safety hazard.**

2.1.5 High Temperatures

Take care when handling a PMU or PA which has been operating recently. Under extreme operating conditions (+140°F [+60°C] ambient air temperature) or high duty cycles, the external surfaces of the PMU and PA can reach temperatures of up to +176°F (+80°C).

2.1.6 LED Safety (EN60825-1)

This equipment contains Class 1 LED Products.

© Tait Limited June 2016

2.1.7 Proximity to RF Transmissions / A proximité des émissions RF

To comply with the RF Field Limits for Devices Used by the General Public for (Uncontrolled Environment)[a], a safe separation distance of at least 12 feet (3.6 metres) from the antenna system should be maintained.

This figure is calculated for a typical installation, employing one 100 W base station transmitter. Other configurations, including installations at multi-transmitter sites, must be installed so that they comply with the relevant RF exposure standards.

a. Reference Standards
   Health Canada's Safety Code 6: *Limits of Human Exposure to Radiofrequency Electromagnetic Energy in the Frequency Range from 3 kHz to 300 GHz*
   USA Federal Communications Commission OET bulletin 65 (47CFR 1.1310)
   IEEE C95.1 2005: *Standard for Safety Levels with Respect to Human Exposure to Radio Frequency Electromagnetic Fields, 3 kHz to 300 GHz*

Pour respecter les limites imposées au champ RF au niveau des équipements utilisés par le grand public (environnement non contrôlé)[a], une distance de séparation de sécurité d'au moins 3.6 mètres du bloc d'antenne devrait être observée.

Ce nombre est calculé pour une installation typique, ayant un émetteur de station de base de 100 W. D'autres configurations, incluant les installations ayant des sites de plusieurs émetteurs, doivent être installées de façon à se conformer aux normes pertinentes des expositions RF.

a. Normes de référence
   Code de sécurité 6 de Santé Canada: *Limites d'exposition humaine à l'énergie électromagnétique radioélectrique dans la gamme de fréquences de 3 kHz à 300 GHz*
   Commission fédérale des communications (FCC) des Etats Unis d'Amérique bulletin OET numéro 65 (47CFR 1.1310)
   IEEE C95.1 2005: *Norme pour les niveaux de sécurité compatibles avec l'exposition des personnes aux champs électromagnétiques de radiofréquence 3 kHz à 300 GHz*

© Tait Limited June 2016

2.2 Equipment Safety

2.2.1 Installation and Servicing Personnel

The equipment should be installed and serviced only by qualified personnel.

2.2.2 Preventing Damage to the PA

The base station has been designed to operate safely under a wide range of antenna loading conditions. Transmitting into a low VSWR will maximize the power delivered to the antenna.

Notice Do not remove the load from the PA while it is transmitting.

Load transients (switching or removing the load) can damage the PA output stage. See "Connecting RF" on page 93 for recommendations.

2.2.3 ESD Precautions

Notice This equipment contains devices which are susceptible to damage from static charges. You must handle these devices carefully and according to the procedures described in the manufacturers' data books.

We recommend you purchase an antistatic bench kit from a reputable manufacturer and install and test it according to the manufacturer's instructions. Figure 2.1 shows a typical antistatic bench set-up.

You can obtain further information on antistatic precautions and the dangers of electrostatic discharge (ESD) from standards such as ANSI/ESD S20.20-1999 or BS EN 100015-4 1994.

Figure 2.1 Typical antistatic bench set-up

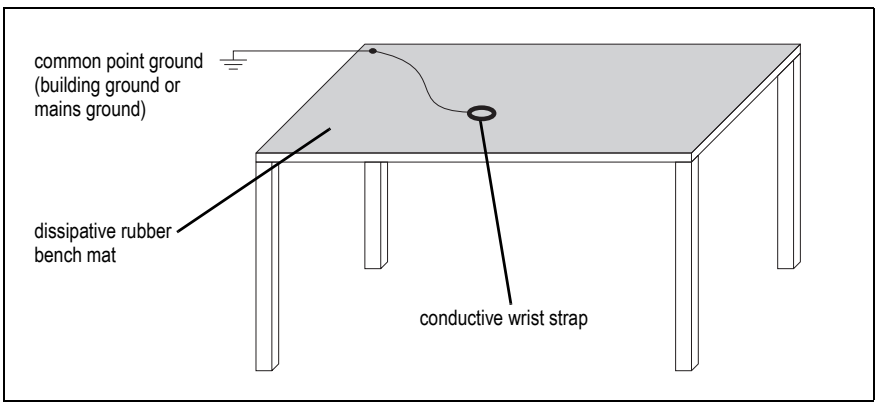

2.2.4 Anti-tampering Devices

All network elements should be physically secured, where possible. This includes the use of locked cabinets and the use of seals on connectors.

All network connectors should be sealed with the stick-on type of seal. The purpose of the seals is to detect unauthorized tampering. The seal should reveal if any of the connectors have been unplugged or if any unauthorized equipment has been plugged in.

The seals must be difficult to remove without breaking, and must bridge between the cable and equipment side (plug and socket) of the connection.

Seals must cover any unused network sockets. This includes the Ethernet connector on the rear panel, any spare switch ports, and the console port on the router and switch.

The seals must be difficult to reproduce. A sticker initialed or signed by the technician should satisfy this.

Seals must be replaced if they need to be disturbed during maintenance.

2.3 Environmental Conditions

2.3.1 Operating Temperature Range

The operating temperature range of the equipment is –22°F to +140°F (–30°C to +60°C) ambient temperature. Ambient temperature is defined as the temperature of the air at the intake to the cooling fans.

2.3.2 Humidity

The humidity should not exceed 95% relative humidity through the specified operating temperature range.

2.3.3 Dust and Dirt

For uncontrolled environments, the level of airborne particulates must not exceed 100 $\mu g/m^3$.

© Tait Limited June 2016

2.4 Regulatory Information

2.4.1 Distress Frequencies

The 406 to 406.1 MHz frequency range is reserved worldwide for use by Distress Beacons. Do **not** program transmitters to operate in this frequency range.

2.4.2 Compliance Standards

This equipment has been tested and approved to various national and international standards. Refer to the latest issue of the Specifications Manual for a complete list of these standards.

2.4.3 FCC Compliance

This equipment complies with:

- CFR Title 47 Part 15 Class B (except PMU):

  Radiated and conducted emissions, and electromagnetic susceptibility specifications of the Federal Communications Commission (FCC) rules for the United States.

  Operation is subject to the following two conditions:

  a. This device may not cause harmful interference, and

  b. This device must accept any interference received, including interference that may cause undesired operation.

- CFR Title 47 Part 15 Class A (PMU only):

  Radiated and conducted emissions, and electromagnetic susceptibility specifications of the Federal Communications Commission (FCC) rules for the United States.

  Operation is subject to the following two conditions:

  a. This device may not cause harmful interference, and

  b. This device must accept any interference received, including interference that may cause undesired operation.

2.4.4 Unauthorized Modifications

Any modifications you make to this equipment which are not authorized by Tait may invalidate your compliance authority's approval to operate the equipment.

The manufacturer is not responsible for any radio or TV interference caused by unauthorized modifications to this equipment. Such modifications could void the user's authority to operate the equipment.

© Tait Limited June 2016

2.4.5 Health, Safety and Electromagnetic Compatibility in Europe

In the European Community, radio and telecommunications equipment is regulated by Directive 1999/5/EC, also known as Radio and Telecommunications Terminal Equipment (R&TTE) directive. The requirements of this directive include protection of health and safety of users, as well as electromagnetic compatibility.

Intended Purpose of Product

This product is a radio transceiver. It is intended for radio communications in the Private Mobile Radio (PMR) or Public Access Mobile Radio (PAMR) services, to be used in all member states of the European Union (EU) and states within the European Economic Area (EEA). This product can be programmed to transmit on frequencies that are not harmonized throughout the EU/EEA, and will require a licence to operate in each member state.

Declaration of Conformity

You can download the formal Declaration of Conformity from www.taitradio.com/eudoc.

© Tait Limited June 2016

3 Operation

This section describes the user controls and indicator LEDs on the front panel and on the base station modules.

© Tait Limited June 2016

3.1 Front Panel

The user controls and indicator LEDs on the front panel are shown in Figure 3.1. They allow some manual control over the base station and monitoring of its operational status.

Notice If there is more that one reciter in a subrack, inputs from all reciters are summed to drive the front panel LEDs.

Figure 3.1 Operating controls on the control panel

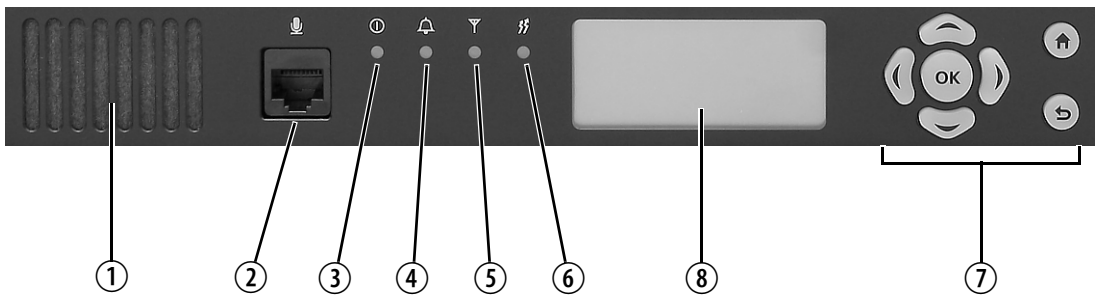

① speaker
② microphone connector
③ power LED
④ alarm LED
⑤ receive LED
⑥ transmit LED
⑦ keypad
⑧ display

① ② **Speaker and Microphone Connector**

The speaker and microphone connector are not used in this release of the base station.

③ **Power LED**

The green power LED is lit when power is supplied to the subrack.

④ **Alarm LED**

The red alarm LED will flash at a rate of 2 to 5 Hz when an alarm has been generated by any of the base station modules. It will continue to flash until the alarm is canceled or the fault is fixed. Note that only those alarms which are enabled using the web interface will cause this LED to flash.

LED	Description
Flashing	One or more faults are present.
On (steady)	A base station is in Offline mode, and no faults are present.
Off	A base station is in Online mode, and no faults are present.

© Tait Limited June 2016

⑤ **Receive LED**

The amber receive LED indicates whether the base station is receiving a valid RF signal on one or both logical channels.

LED	Description
On (steady)	A base station is receiving a valid RF signal.
Off	A base station is not receiving a valid RF signal.

⑥ **Transmit LED**

The amber transmit LED is lit while the transmitter is transmitting.

⑦ **Keypad**

The keypad is used to navigate the base station's menus, enter text, and to adjust the contrast of the display. The complete list of menu items is provided in "Menu Map" on page 43.

If required, the keypad can be disabled in the web interface to prevent access to the base station via the front panel menus (see "Disabling the Front Panel Keypad" on page 63).

Key	Name	Function
	left and right arrow keys	■ Move the cursor to the left or right when entering text. Moving the cursor beyond the end of a line will return it to the other end of the same line. ■ Decrease or increase the contrast in the Display Contrast screen.
	scroll keys	■ Scroll up and down through a list of menu items. ■ Scroll up and down through the list of available characters when entering text. ■ Increase or decrease the contrast in the Display Contrast screen.
OK	OK	■ Selects the highlighted menu item. ■ Confirms any adjustments made and exits to the previous menu. ■ When setting the IP address, moves the cursor down one line. When all the IP addresses are confirmed, exits to the previous menu.
	home	■ Returns to the home screen from any other menu.
	return	■ Returns to the previous menu. ■ Moves the cursor up one line in the IP address screen. When the top line is reached, pressing again returns to the previous menu.

ⓘ Unlike a computer keyboard, the keys do not auto-repeat. Each action requires a separate key-press.

⑧ Display

The display is used in conjunction with the keypad to access the base station's menus. It allows the technician to configure the IP address of each reciter (refer to "Setting the IP Address" on page 52), and to set the contrast of the display (see below).

After the base station is powered up, the display shows "Please wait…" while the base station is starting up, followed by the home screen when the start-up process is complete. The home screen shows four lines of user-defined text, which can be entered via the web interface (Identity > Identity > Base Station Identity).

From the home screen press an arrow key, a scroll key or OK to go to the base station menu. The display returns to the home screen from any other screen 30 seconds after the last key press. Press any key to turn on the backlight. The backlight turns off 30 seconds after the last key press.

ⓘ If the keypad has been disabled, pressing an arrow key, a scroll key or OK will cause the display to show "Keypad Disabled".

Set the display contrast as follows:

1. From the base station menu select Modules > Front Panel > Contrast.
2. To increase the contrast, press the right arrow or scroll up key. To decrease the contrast, press the left arrow or scroll down key.
3. When the contrast is set to the required level, press OK to save the changes and exit the menu.

© Tait Limited June 2016

Menu Map

The menu map below shows the menu items available in this release of the base station.

Notice The menu map shown is for a single base station. The menu items available in your base station will depend on which modules are present in the subrack, and whether the keypad has been disabled (refer to "Disabling the Front Panel Keypad" on page 63).

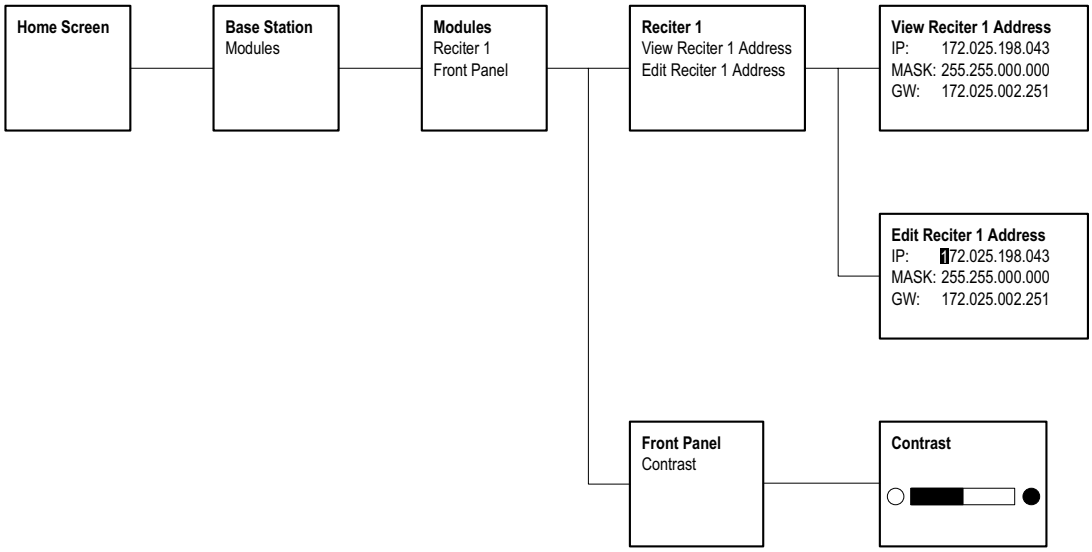

3.2 Module Indicator LEDs and Switches

Additional status information is displayed by LEDs in individual modules. The PMU also has switches that let you turn the AC and DC modules off.

3.2.1 Reciter

Front View

The indicator LEDs on the front of the reciter are visible through a slot in its front panel.

Figure 3.2 Indicator LEDs on the front of the reciter

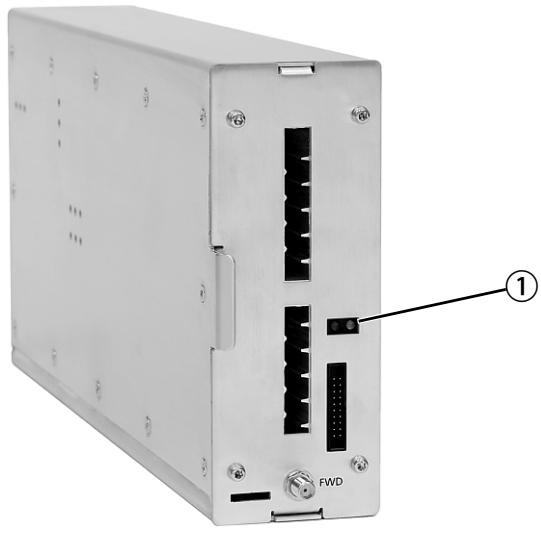

① indicator LEDs

These LEDs provide the following information about the state of the reciter:

- steady green - the reciter is powered up
- flashing red - one or more alarms have been generated; you can use the web interface to find out more details about the alarms.

© Tait Limited June 2016

Rear View The indicator LEDs on the rear of the reciter are on the Ethernet connector.

Figure 3.3 Indicator LEDs on the rear of the reciter

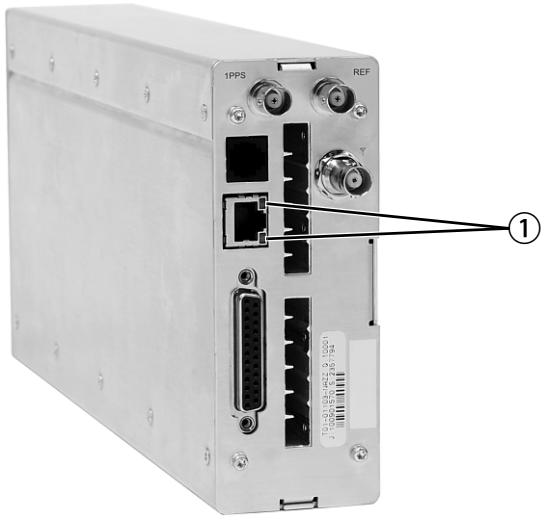

1 indicator LEDs

These LEDs provide the following information about the state of the reciter:

- steady amber - the Ethernet interface is connected
- flashing green - data is being transmitted across the Ethernet interface.

© Tait Limited June 2016

3.2.2 PA

The indicator LEDs on the PA are visible through a slot in its front panel.

Figure 3.4 Indicator LEDs on the PA

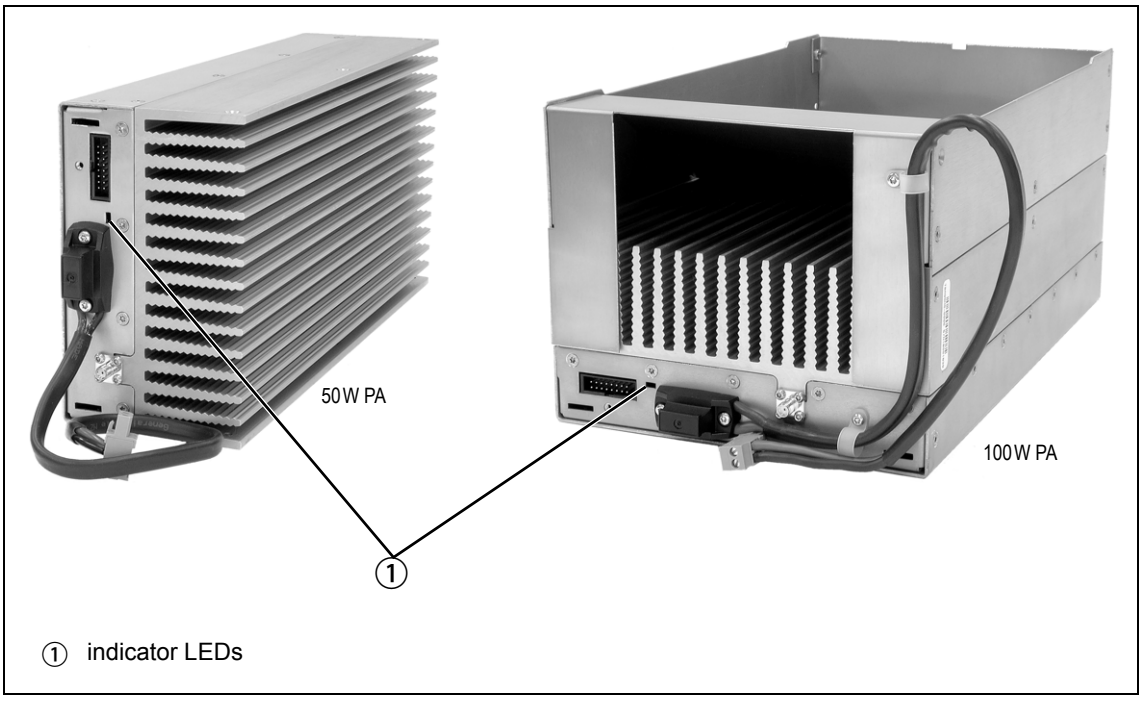

Indicator LEDs

These LEDs provide the following information about the state of the PA:

- steady green - the PA is powered up
- flashing green - the PA has no application firmware loaded or activated; you can use the web interface to download or activate the firmware; also see "Preparing to Download Firmware" on page 64
- flashing red - one or more alarms have been generated; you can use the web interface to find out more details about the alarms.

ⓘ The alarm LED will flash whenever an alarm is generated, whether or not this alarm has been disabled via the web interface.

© Tait Limited June 2016

3.2.3 PMU

The only controls on the PMU are the on/off switches on the rear panel for the AC and DC modules, and the indicator LEDs visible through a slot in its front panel.

Figure 3.5 Operating controls on the PMU

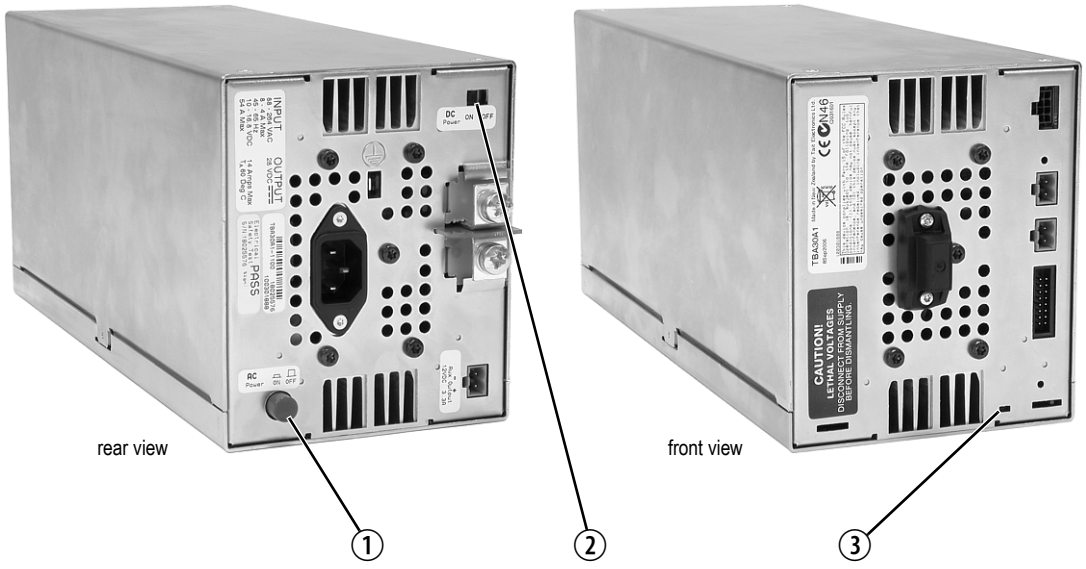

① AC module on/off switch

② DC module on/off switch

③ indicator LEDs

Warning **The AC and DC module on/off switches do not totally isolate the internal circuitry of the PMU from the AC or DC power supplies. You must disconnect the AC and DC supplies from the PMU before dismantling or carrying out any maintenance. Refer to the service manual for the correct servicing procedures.**

AC Module On/Off Switch

This switch turns the AC input to the PMU on and off. Note that this switch breaks only the phase circuit, not the neutral.

The red button remains “out” whether on or off.

DC Module On/Off Switch

This switch turns the DC output from the PMU on and off. Note that this switch does not disconnect power from the DC converter itself. It disables the converter by switching off its control circuitry. Even when the DC converter is off, the DC input is still connected to its power circuitry.

The switch is recessed to prevent the DC module being accidentally switched off.

Indicator LEDs

These LEDs provide the following information about the state of the PMU:

- steady green - the PMU is powered up
- flashing green - the PMU has no application firmware loaded or activated; you can use the web interface to download or activate the firmware; also see "Preparing to Download Firmware" on page 64
- flashing red - one or more alarms have been generated; you can use the web interface to find out more details about the alarms
- flashing red and green - the PMU is in battery protection mode; check that the battery voltage is above the configured minimum startup voltage; also check that the minimum startup voltage is configured correctly.

ⓘ The alarm LED will flash whenever an alarm is generated, whether or not this alarm has been disabled via the web interface.

© Tait Limited June 2016

4 Working with Base Stations from Your PC

The normal web browser on your PC provides a window into the TB9300 base station. Use it to connect to the base station so that you can monitor, configure, diagnose, and calibrate it (if required).

This section describes the following:

- Connecting to the base station, including initially setting things up.
- Working with base station web pages.
- Carrying out basic tasks.

This section provides an overview of some aspects of the web interface. Refer to the Help for detailed instructions.

© Tait Limited June 2016

4.1 PC Recommendations

We recommend the following PC hardware and software for connecting to a TB9300 base station:

- SVGA Monitor (1024 x 768 minimum).
- Network connection.
- The base station works with recent versions of most modern browsers. Refer to the Release Notes for more information on currently supported browsers.

4.2 Connecting Your PC to the Base Station

You connect to a base station using your web browser. Using multiple browser windows or tabs, you can view more than one base station and more than one page of any base station at once. Base stations have a web-based interface that provides the pages you view. Up to ten users may be logged in to a base station at once.

The base station has three different user access levels: Administrator, Maintainer, and Monitor. Passwords can be defined for each level. This is done using the base station's web interface (Tools > Tools > User Administration). Refer to the Help for more information on setting user access levels.

Connections to the base station can be authenticated by a remote (i.e. centralized) service. Refer to the Help and "Setting Up Authentication" on page 57 for more information.

© Tait Limited June 2016

4.2.1 Logging In

1. Enter the base station's URL into your browser using a secure connection (https://). To find out the base station's IP address, on the front panel select Modules > Reciter 1 (or 2) > View Reciter 1 (or 2) Address. To set the IP address, refer to "Setting the IP Address" on page 52.

   Notice If access to this menu has been disabled, you cannot use the front panel to find out the IP address. Make sure that you store the IP address securely and do not lose it.

2. A security warning appears when you connect for the first time. Proceed anyway (refer to "Security Certificates" on page 53).

3. The login screen appears.

4. Enter your user name and password. When connecting for the first time, enter the user name "admin" and password "tbc_admin".

5. Click **Login**.

   Notice After logging in we recommend that you change the password and username for your own security (refer to "Working with the Web Interface" on page 58). Make sure that you store your passwords and usernames securely and do not lose them. They may be needed by Tait support personnel if assistance is required. Tait cannot retrieve forgotten passwords.

4.2.2 Setting the IP Address

Before the base station is installed on site, you need to provide it with its proper IP address. Make sure that you do not lose this address. A quick way to set the base station's IP address is to use the front panel, as described below.

Notice If access to this menu on the front panel has been disabled, log in to the base station and set the IP address using the web interface (Identity > Identity > Network Identity).

1. Use the front panel display to enter the IP address, subnet mask and gateway specified for this base station by the IP addressing plan for the network. From the base station menu select Modules > Reciter 1 (or 2) > Edit Reciter 1 (or 2) Address. If the home screen is showing, press an arrow key, a scroll key or OK to clear it.

Notice In this screen each octet in the address lines has provision for three characters. If an octet in the address has less than three characters, enter one or two leading zeroes so that each position is filled, even though the zeroes are not part of the address. For example, enter 172.25.163.47 as 172.025.163.047. Leading zeroes are removed when the address is programmed into the base station.

2. Set each address as described below. Use the left and right arrow keys to move the cursor across each line in the Addresses screen. Use the scroll keys to scroll through the available numbers for each position in a line.
   a. Set the IP address and press OK. This moves the cursor to the next line. To move the cursor back to the previous line, press the return key.
   b. Set the Mask address and press OK.
   c. Set the Gateway address and press OK.
   d. The display shows "Setting Reciter 1 (or 2) address Please wait..." while the base station confirms that the addresses are correct. When this process has finished, the display will show "SUCCEEDED" or "FAILED" as appropriate. Press OK to return to the previous menu.

3. If the process failed, try entering the address again. If it still fails, try the following:
   - enter the address through the web interface
   - check that the IP address you are trying to enter is not already in use by another device on the same subnet.

© Tait Limited June 2016

4.2.3 Security Certificates

You can upload your own security certificates to the base station (Tools > Settings > Web certificate). If you have installed and configured the appropriate Certification Authority software, you can issue security certificates for all base stations. After uploading the certificates to the base stations, you can configure all maintainers' web browsers to accept security certificates from your own Certification Authority.

Before you have uploaded a security certificate to the base station, it will raise a security warning when your browser connects to it for the first time. The base station creates a self-signed certificate when the reciter's firmware is installed. Your browser raises a security warning because the security certificate was not issued by a trusted Certification Authority. The browser has a way of letting you override or bypass the security warning.

© Tait Limited June 2016

4.2.4 Connecting a Networked PC to a Base Station

You may want to temporarily disconnect a networked PC from its LAN in order to be able to establish a direct connection with the base station. A physical connection is needed as well as an alternate (Windows 7, Windows Vista, Windows XP) or temporary (Windows 2000) IP address and subnet mask.

Windows 7 or Windows Vista

1. Remove the local area Ethernet connection and connect an Ethernet patch cable between the PC and the base station. You can use either a straight through or crossover Ethernet patch cable with the current base station firmware.
2. Navigate to Control Panel > Network and Internet > Network and Sharing Center.
3. Click View status.
4. In the Local Area Connection Status dialog box, click Properties.
5. In the Local Area Connection Properties dialog box, click Internet Protocol Version 4 (TCP/IPv4), and then click Properties.
6. Click Alternate Configuration.
7. Select the User configured option, and then enter a number that is on the same subnet as the base station. For example, if the TB9300 has IP 192.168.1.2, enter 192.168.1.1 for the PC.
8. Enter a suitable subnet mask, for example 255.255.255.0.

   The web browser should now be able to connect to any physically connected base station that is on the same subnet.
9. Once the web browser session is finished, re-connect the local area network cable to the PC. The PC then uses its normal TCP/IP properties.

For those using Windows XP, be aware that Microsoft no long updates this, therefore this may leave you open to security risks.

Windows XP Professional

1. Remove the local area Ethernet connection and connect an Ethernet patch cable between the PC and the base station. You can use either a straight through or crossover Ethernet patch cable with the current base station firmware.
2. Click Start > Settings > Control Panel.
3. Double-click Network Connections.
4. Double-click the Local Area Network icon.
5. Click Properties.

© Tait Limited June 2016

6. Click Internet Protocol (TCP/IP), and then click Properties.
7. Click Alternate Configuration.
8. Select the User configured option, and then enter a number that is on the same subnet as the base station. For example, if the TB9300 has IP 192.168.1.2, enter 192.168.1.1 for the PC.
9. Enter a suitable subnet mask, for example 255.255.255.0.

   The web browser should now be able to connect to any physically connected base station that is on the same subnet.
10. Once the web browser session is finished, re-connect the local area network cable to the PC. The PC then uses its normal TCP/IP properties.

Windows 2000

1. Remove the local area Ethernet connection and connect an Ethernet patch cable between the PC and the base station. You can use either a straight through or crossover Ethernet patch cable with the current base station firmware.
2. Select Start > Settings > Network and Dialup Connections.
3. Double-click the Local Area Connection icon.
4. Click Properties.
5. Click Internet Protocol (TCP/IP), and then click Properties.
6. Note the current settings so that you can restore them later.
7. Select Use the following IP address, and then enter a number that is on the same subnet as the base station. For example, if the base station has IP 192.168.1.2, enter 192.168.1.1 for the PC.
8. Enter a suitable subnet mask, for example 255.255.255.0.

   The web browser should now be able to connect to the base station.
9. When you have finished the web browser session, re-connect the local area network cable to the PC and then restore the original PC configuration. When you close the Network connection dialog box, the restored configuration is applied.

© Tait Limited June 2016

4.2.5 Troubleshooting Connection Problems

If the attempt to connect to a base station failed, consider these possible causes.

1. Your PC is part of your organization's LAN and does not belong to the same subnet as the base station. Give the PC a suitable IP address and subnet mask as described in "Connecting a Networked PC to a Base Station" on page 54.

2. You are attempting to connect to the wrong IP address. Check that the IP address is correct.

   Notice You can quickly check the base station's IP address via the front panel, as long as access to this menu has not been disabled.

3. The link to the base station is down. Use ping to check.

4. You may have to bypass the proxy in your organization's LAN to access the Tait Network. Ask your system administrator to give you access.

5. JavaScript may be disabled in your browser. If JavaScript is disabled, your browser will be unable to connect to the base station. Note that modern browsers normally have JavaScript enabled by default.

4.2.6 Finding a Lost or Forgotten IP Address

Use the following procedure if an IP address has been lost or forgotten.

1. Mount the reciter in a TB9300 subrack and fit the front panel. Power up the subrack.

2. On the front panel display select Modules > Reciter 1 (or 2) > View Reciter 1 (or 2) Address.

© Tait Limited June 2016

4.2.7 Setting Up Authentication

Connections to the base station can be authenticated by a remote (i.e. centralized) service (Tools > Settings > Authentication). Two remote authentication protocols are supported: LDAP and RADIUS.

Notice Only people experienced with the AAA architecture and authentication protocols should make changes on this page.

Moving logins to a centralized server can provide enhanced security for a number of reasons, such as:

- less work is required to manage password-controlled access to all base stations in a network; you no longer need to change the password in each base station individually
- previously used passwords may be excluded from re-use
- access can be denied after a set number of incorrect passwords is entered
- passwords can be set to expire on a certain date
- remote access to base stations can be globally enabled and disabled as required for technical staff during the commissioning process.

Once the centralized server logins are set up, we recommend that only one local administrator login is left on the base station for emergency use (e.g. when the connection to the server is lost). The password for this emergency login should be kept secret.

Notice Unless they are deleted, any local logins left on the base station will still work and have priority over remote logins.

© Tait Limited June 2016

4.3 Working with the Web Interface

This section provides an overview of the web interface. Refer to the Help for detailed instructions.

When you connect to a base station, the browser displays a page like the following.

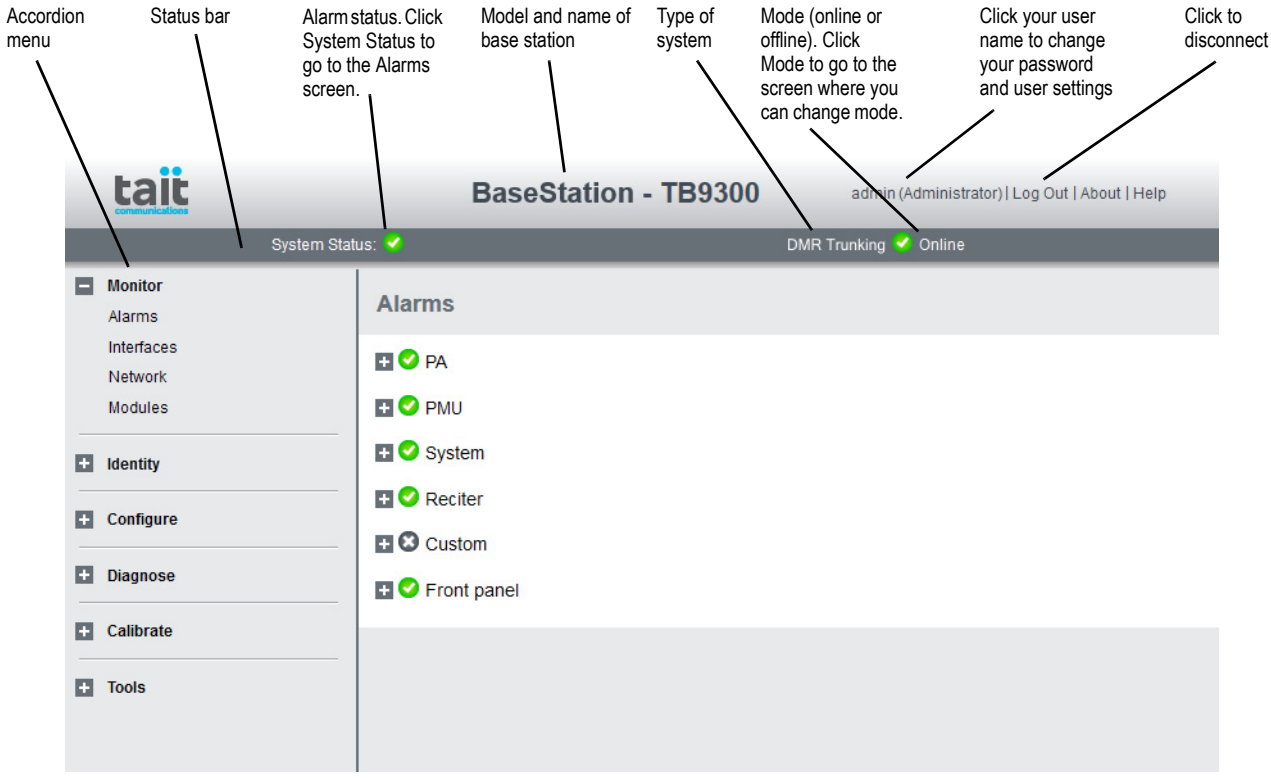

The accordion menu on the left gives you access to the various pages. Click a top level item (such as Configure) to open up its menu. Click on a menu item to display its page, then click on the appropriate tab on that page to display the required information. Click the + icon (⊞) on a menu item to expand the menu tree and the – icon (⊟) to collapse it again.

Press F11 for a full-screen display of the browser which does not show toolbars and other information. Press F11 again to return to the standard view.

ⓘ Using a browser window size smaller than 1024 x 768 may cause some pages to display incorrectly.

© Tait Limited June 2016

4.3.1 Monitoring Operation

Using the monitoring pages, you can see how the base station is currently operating.

For example, you can see the status of its RF interface (Monitor > Interfaces > DMR RF).

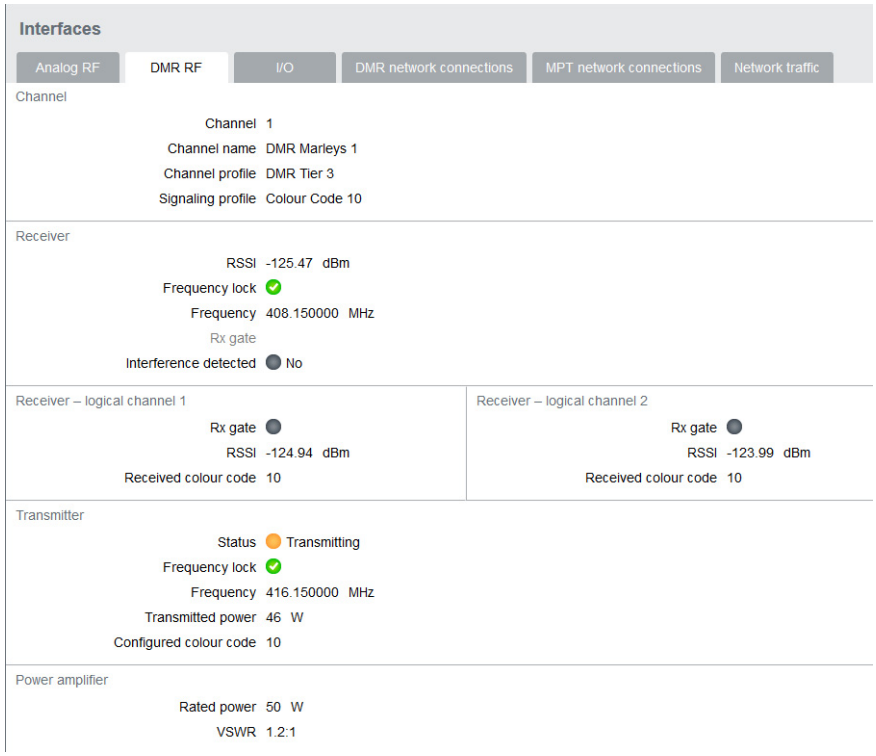

4.3.2 Viewing Configuration Settings

The base station has many configuration settings that personalize it for its particular role in the network. Some settings, such as those for the trunking interface (Configure > RF Interface > Channel profiles), always apply.

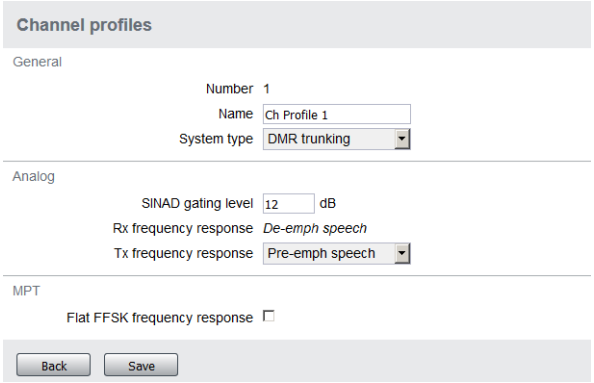

Others are channel-based so that they can be dynamically changed. To view these, you first need to know the channel that the base station is operating on. Select Identity > Identity > Base Station to see its default channel number. Then you can view the base station's channel configuration settings. Select Configure > Base Station > Channels to view the list of channels.

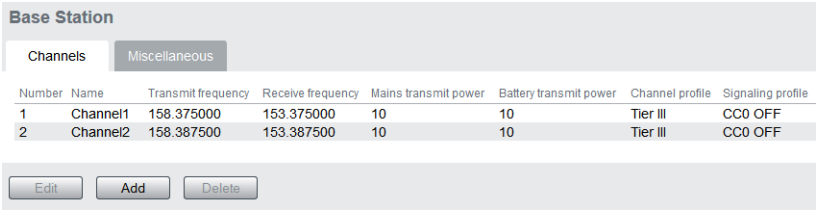

Select a channel and click Edit to view details of the channel. Clicking directly on any text in a line will also open the edit screen.

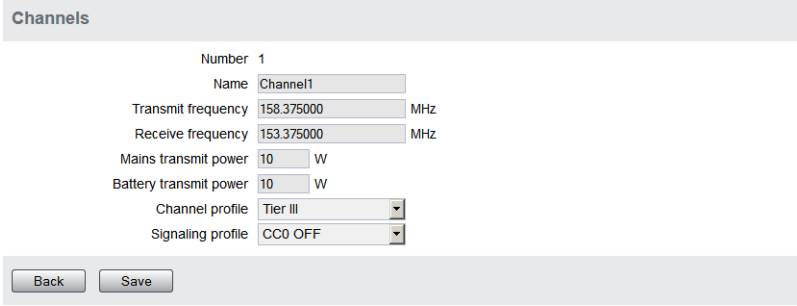

© Tait Limited June 2016

4.3.3 Viewing the Base Station and Network Identity

Each base station in a network has a unique base station and network identity.

Select Identity > Identity and then Base Station or Network to view details such as name, default channel and network addresses. Note that the Host name field has a maximum of 63 characters, and may use the characters a–z, 0–9, dot and hyphen. You cannot use spaces.

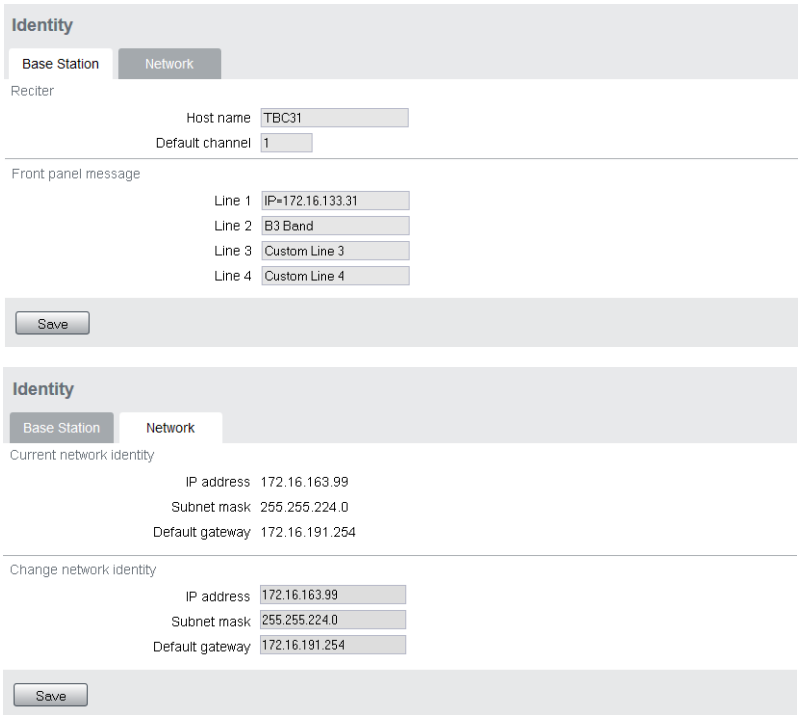

You can also enter here the four lines of information you want to appear on the home screen on the front panel display. Each line has a maximum of 20 characters.

4.4 Basic Tasks

4.4.1 User Settings

Click on your user name in the top right corner of the page to choose whether the temperature is displayed in Fahrenheit or Celsius[1], and to change your password. Note that this information is stored in the reciter, not in your browser.

4.4.2 Taking the Base Station Offline

You may need to take the base station offline in order to carry out diagnostic tests or to take it out of service if a fault develops.

1. Click Mode on the status bar (or Select Tools > Tools > Base Station).

2. Under Control, select Offline. Click Offline to confirm the change. In the Status area, the Mode display changes first to “Changing”, and then to “Offline” ( ).

4.4.3 Troubleshooting Alarms

If the Alarm status on the status bar displays red, one or more alarms have been triggered, and the Alarms menu automatically expands to display the alarm(s). Click Help and navigate to the description of that alarm.

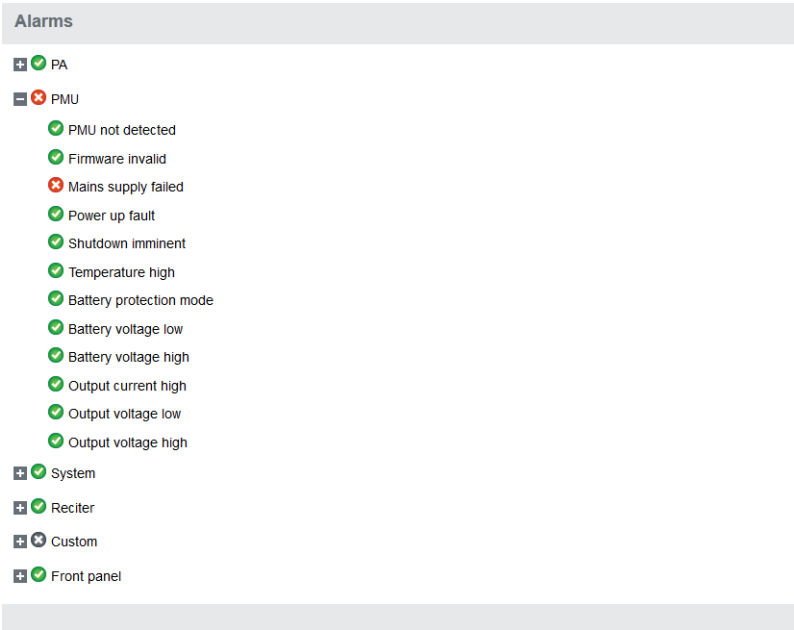

1. For this change to take effect, you must log out of the base station and then log back in again.

© Tait Limited June 2016

4.4.4 Working with Configuration Files

At any time, you can save the current configuration settings as a file (Tools > Files > Configuration > Backup configuration). This is stored in the base station, but we recommend that you download it and store it on your computer as an off-site backup. The base station identity and network identity are not saved as part of the configuration file.

You may want to develop a master configuration and upload it to all base stations in the network. The master configuration can contain all the different channel configurations and can be common to all base stations. The base station identity selects the default channel.

> Base stations are delivered with a default configuration which provides a safe set of values. We recommend that you download it and store it on your computer as a backup before changing and saving any configuration settings.

You can also generate a report containing all the base station's configuration settings (Tools > Files > Configuration > Configuration report), which can be saved as a text file. We recommend that you do this when the base station is commissioned. This report can be useful later if there is a problem with the base station. Comparing the original report with the later one may highlight changes in configuration that are causing a problem.

4.4.5 Setting Up Custom Alarms

Each of the base station's 12 digital inputs can be used to raise a custom alarm when the input goes high or low. The Custom Alarms form (Configure > Alarms > Custom Alarms) allows you to assign a name to each custom alarm, and to configure whether the alarm is triggered when the digital input goes high or low. Custom alarms are reported via the web interface and SNMP traps.

Custom alarms are used to provide an alarm when an external event activates a digital input. You can rename any of the available alarms to provide a more meaningful name, such as "Door open".

> Take care when setting the severity of alarms, including custom alarms (Configure > Alarms > Severity). Setting an alarm's severity to Major will cause the node to take the base station out of service when the alarm is raised. Refer to the Help for more information.

4.4.6 Disabling the Front Panel Keypad

You can disable the front panel keypad to prevent access to the base station via the front panel menus. Select Configure > Base Station > Miscellaneous and in the Front Panel area clear the Keypad enabled check box.

© Tait Limited June 2016

Notice If you disable the front panel keypad, you cannot use it to find out the base station's IP address. Make sure that you store the IP address securely and do not lose it.

4.4.7 Preparing to Download Firmware

New versions of base station firmware are remotely downloaded to base stations from a package server (a web server application). You can set up a single computer to be the central package server for all the base stations on your network, using a web server of your choice. Tait also provides the Mongoose[1] web server as part of the base station firmware package for use with a temporary package server, such as a laptop.

The base station firmware package can be downloaded as a zip file from the Tait support website.

This procedure describes using the Mongoose web server.

Installing the Firmware Package

The installation procedure copies files into a folder and adds items to the Windows Start menu (Start > Programs > Tait Applications > TB9400). From the Start menu you can then access the Help, licenses, manuals and release notes for each firmware package, and also start Mongoose.

ⓘ You do not have to install Mongoose to make it work, because it is a self-contained executable file. Once started, it will run in the background until stopped, or the computer is shut down. Mongoose must also run from the same folder as the firmware files.

If you are downloading a base station package zip file:

1. Save the zip file to a suitable location on the hard drive of the package server computer.
2. Extract the zip file, then navigate to the root folder and double-click *TB9400.msi* to run the Windows installer.

Notice Tait recommends that the maximum length of the path to the location of the extracted files is 100 characters. Using a longer path may cause the files to be extracted incorrectly.

1. Mongoose runs on Windows only.

© Tait Limited June 2016

Setting Up a Central Package Server

It is beyond the scope of this manual to describe the exact procedure for setting up a central package server for any particular network. Tait expects that each customer will configure their own package server according to the requirements for their network.

However, you do need to configure each base station with the IP address and port of the package server computer.

1. Log in to the base station and select Configure > Base Station > Miscellaneous.
2. Under Package server, enter the IP address and port number of the package server.
3. Download the firmware as described in the Help.

Notice The base station has enough space for two firmware packages. If the base station already has two packages, delete the unwanted package before downloading another.

Setting up a Temporary Package Server

If you want to use a laptop as a temporary package server, you can temporarily override the package server IP address and port in each base station.

1. Run Mongoose on the temporary package server (Start > Programs > Tait Applications > TB9400 > Mongoose).
2. Windows Firewall may raise a Security Alert about allowing Mongoose to access your network or the internet.
   a. In Windows 7 allow access to private networks.
   b. In Windows XP click Unblock.
3. Log in to the base station and select Tools > Firmware > Download.
4. Under Package server, enter the IP address of the laptop. The default port number is 8080.
5. Download the firmware as described in the Help.
6. If you have trouble with any of the above procedures, please consider the following points:
   - The firmware download process uses the HTTP protocol. If you are using a laptop from outside the radio communications network, make sure that HTTP traffic can get through the firewall.
   - If Mongoose fails to start, it may already be running, or another application may be using port 8080.
   - If the error message “Could not find index file” appears when listing packages, Windows security may be silently blocking access for Mongoose. Turn off the laptop’s WiFi and temporarily disable its firewall, then try again.

© Tait Limited June 2016

- The base station has enough space for two firmware packages. If the base station already has two packages, delete the unwanted package before downloading another.

4.4.8 Checking for Interference on a Receive Channel

You can use the Signal Level page (Diagnose > RF Interface > Signal Level) to look for sources of interference across a range of receive frequencies.

The chart on this page has two lines. One shows the current RSSI measurement for the selected frequency. The second shows a historical trace of peak RSSI readings on that frequency.

© Tait Limited June 2016