TB9400 Base Station

Installation and Operation Manual

MBC-00001-05 · Issue 5 · December 2013 (Draft)

www.taitradio.com

Contact Information

Tait Communications
Corporate Head Office

Tait Limited
P.O. Box 1645
Christchurch
New Zealand

For the address and telephone number of regional offices, refer to our website: www.taitradio.com

Copyright and Trademarks

All information contained in this document is the property of Tait Limited. All rights reserved.
This document may not, in whole or in part, be copied, photocopied, reproduced, translated, stored, or reduced to any electronic medium or machine-readable form, without prior written permission from Tait Limited.

The word TAIT and the TAIT logo are trademarks of Tait Limited.

All trade names referenced are the service mark, trademark or registered trademark of the respective manufacturers.

Disclaimer

There are no warranties extended or granted by this document. Tait Limited accepts no responsibility for damage arising from use of the information contained in the document or of the equipment and software it describes. It is the responsibility of the user to ensure that use of such information, equipment and software complies with the laws, rules and regulations of the applicable jurisdictions.

Enquiries and Comments

If you have any enquiries regarding this document, or any comments, suggestions and notifications of errors, please contact your regional Tait office.

Updates of Manual and Equipment

In the interests of improving the performance, reliability or servicing of the equipment, Tait Limited reserves the right to update the equipment or this document or both without prior notice.

Intellectual Property Rights

This product may be protected by one or more patents or designs of Tait Limited together with their international equivalents, pending patent or design applications, and registered trade marks: NZ409837, NZ409838, NZ415277, NZ415278, NZ508806, NZ508807, NZ511155, NZ516280/NZ519742, NZ520650/NZ537902, NZ521450, NZ524369, NZ524378, NZ524509, NZ524537, NZ530819, NZ534475, NZ534692, NZ537434, NZ547713, NZ569985, NZ577009, NZ579051, NZ579364, NZ580361/NZ601933, NZ584534, NZ586889, AU2003281447, AU2004216984, AU2010212364, AU11677/2008, AU13745/2008, CN200930004199.5, CN1031871, CN1070368, CN200930004200.4, CN200930009301.0, CN201110141630, CN201110253742.1, EU000915475-0001, EU000915475-0002, GB2413249, US5,745,840, US7,649,893, US7,758,996, US7,937,661, US8,301,682, US10/597339, US29/401234, US29/401235, US61/218015, US61/236663, US61/323437.

This product may also be made under license under one or more of the following U.S. Patents: 5,146,497, 5,148,482, 5,164,986, 5,185,795, 5,185,796, 5,271,017, 5,377,229 and 5,502,767.
The AMBE+2™ voice coding Technology embodied in this product is protected by intellectual property rights including patent rights, copyrights and trade secrets of Digital Voice Systems, Inc. This voice coding Technology is licensed solely for use within this Communications Equipment. The user of this Technology is explicitly prohibited from attempting to decompile, reverse engineer, or disassemble the Object Code, or in any other way convert the Object Code into a human-readable form. Protected by U.S. Patents 5,870,405, 5,826,222, 5,754,974, 5,701,390, 5,715,365, 5,649,050, 5,630,011, 5,581,656, 5,517,511, 5,491,772, 5,247,579, 5,226,084 and 5,195,166.

Environmental Responsibilities

Tait Limited is an environmentally responsible company which supports waste minimization, material recovery and restrictions in the use of hazardous materials.

The European Union's Waste Electrical and Electronic Equipment (WEEE) Directive requires that this product be disposed of separately from the general waste stream when its service life is over. For more information about how to dispose of your unwanted Tait product, visit the Tait WEEE website at www.taitradio.com/weee. Please be environmentally responsible and dispose through the original supplier, or contact Tait Limited.

Tait Limited also complies with the Restriction of the Use of Certain Hazardous Substances in Electrical and Electronic Equipment (RoHS) Directive in the European Union.

In China, we comply with the Measures for Administration of the Pollution Control of Electronic Information Products. We will comply with environmental requirements in other markets as they are introduced.

Contents

Preface 7
Scope of Manual 7
Document Conventions 7
Associated Documentation 8
Publication Record 8

1 Description 9
1.1 Features 10
1.2 Modules 11
1.3 Mechanical Assembly 14
1.4 Frequency Bands and Sub-bands 17
1.5 Applications 17
1.6 Licenses 18
1.7 Theory of Operation 19
1.7.1 Signal Paths 21
1.7.2 Online and Offline Modes 21
1.7.3 Intermodule Communications 22
1.7.4 Power Management and Distribution 23
1.7.5 PMU Operation on DC Input 25
1.7.6 Front Panel Fans 28

2 General Safety and Regulatory Information 29
2.1 Personal Safety 30
2.1.1 Unpacking and Moving the Equipment 30
2.1.2 Lethal Voltages 30
2.1.3 AC Power Connection 31
2.1.4 Explosive Environments 31
2.1.5 Proximity to RF Transmissions 31
2.1.6 High Temperatures 31
2.1.7 LED Safety (EN60825-1) 31
2.2 Equipment Safety 32
2.2.1 Installation and Servicing Personnel 32
2.2.2 Preventing Damage to the PA 32
2.2.3 ESD Precautions 32
2.2.4 Anti-tampering Devices 33
2.3 Environmental Conditions 33
2.3.1 Operating Temperature Range 33
2.3.2 Humidity 33
2.3.3 Dust and Dirt 33
2.4 Regulatory Information 34
2.4.1 Distress Frequencies 34

© Tait Limited December 2013 (Draft)

2.4.2 Compliance Standards 34
2.4.3 FCC Compliance 34
2.4.4 Unauthorized Modifications 34

3 Operation 35

3.1 Front Panel 36

3.2 Module Indicator LEDs and Switches 40
3.2.1 Reciter 40
3.2.2 PA 42
3.2.3 PMU 43

4 Working with Base Stations from Your PC 45

4.1 PC Recommendations 46

4.2 Connecting Your PC to the Base Station 46
4.2.1 Logging In 47
4.2.2 Setting the IP Address 48
4.2.3 Responding to Security Warnings 49
4.2.4 Connecting a Networked PC to a Base Station 50
4.2.5 Troubleshooting Connection Problems 52
4.2.6 Finding a Lost or Forgotten IP Address 52

4.3 Working with the Web Interface 53
4.3.1 Monitoring Operation 54
4.3.2 Viewing Configuration Settings 55
4.3.3 Viewing the Base Station and Network Identity 57

4.4 Basic Tasks 58
4.4.1 User Settings 58
4.4.2 Taking the Base Station Offline 58
4.4.3 Troubleshooting Alarms 58
4.4.4 Working with Configuration Files 59
4.4.5 Configuring Single Base Stations 59
4.4.6 Configuring Base Stations in a Channel Group 60
4.4.7 Setting Up Custom Alarms 60
4.4.8 Disabling the Front Panel Keypad 60
4.4.9 Preparing to Download Firmware 61

5 Installation 65

5.1 Before You Begin 66
5.1.1 Equipment Security 66
5.1.2 Grounding and Lightning Protection 66
5.1.3 Equipment Ventilation 66
5.1.4 Ambient Temperature Sensor 66
5.1.5 Cabinet and Rack Ventilation 67

5.2 Unpacking and Moving the Subrack 69

5.3 Identifying the Equipment 71

5.4 Initial Setting Up 73
5.4.1 Confirming Operation 73
5.4.2 Customizing the Configuration 75

© Tait Limited December 2013 (Draft)

5.4.3 Recommended Configuration Settings 75
5.4.4 Restricted Port Numbers 76
5.4.5 Changing the Root Password. 76
5.4.6 Tuning the Reciter 77

5.5 Installing the Base Station on Site 81
5.5.1 Base Stations for Trunked Systems 81
5.5.2 Equipment Required 81
5.5.3 Mounting the Subrack 82

5.6 Connecting Up the Base Station 86
5.6.1 Connection Overview 86
5.6.2 Connecting AC Power 87
5.6.3 Connecting DC Power 88
5.6.4 Connecting the Auxiliary DC Power Output. 89
5.6.5 Connecting RF 90
5.6.6 Connecting an External Frequency Reference 91
5.6.7 Connecting a 1 PPS Source 92
5.6.8 Ethernet Connection 92
5.6.9 Connecting General Purpose Inputs and Outputs 93

6 Maintenance 95

7 Troubleshooting 97

8 Replacing Modules 99

8.1 Saving the Base Station's Configuration 100
8.2 Preliminary Disassembly 101
8.3 Replacing a Reciter 103
8.4 Replacing a Power Amplifier. 105
8.5 Replacing a Power Management Unit 107
8.6 Replacing the Module Guide Rails 108
8.7 Replacing the Subrack Interconnect Board 109
8.8 Final Reassembly 110

Appendix A – Interface Pin Allocations 111

System Interface Connector 111
Ethernet Connector. 111
PMU Auxiliary DC Output 111

Appendix B – Inter-Module Connections. 113

Dual 50 W Base Station 113
Single 50 W Base Station 114
100 W Base Station. 115

© Tait Limited December 2013 (Draft)

Appendix C – Identifying Front Panels 117

Glossary 119

Tait Software License Agreement 131

© Tait Limited December 2013 (Draft)

Preface

Scope of Manual

This manual provides information on installing and operating the TB9400 base station. It is intended for use by experienced technicians familiar with installing and operating base station equipment. It also includes configuration, maintenance and troubleshooting information.

Except where stated otherwise, the information in this manual generally applies to both standard and receive-only base stations and reciters. References to power amplifiers (PAs) and transmitting obviously do not apply to receive-only equipment.

Document Conventions

The TB9400 base station has a web interface with an accordion menu on the left side of the screen. “Configure > Base Station > Channels” means click Configure in the top-level menu, then in the expanded Configure menu click Base Station, and finally click on the Channels tab on that page.

Within this manual, four types of alerts may be given to the reader. The following paragraphs illustrate each type of alert and its associated symbol.

Warning **This alert is used when there is a hazardous situation which, if not avoided, could result in death or serious injury.**

Caution This alert is used when there is a hazardous situation which, if not avoided, could result in minor or moderate injury.

Notice This alert is used to highlight information that is required to ensure procedures are performed correctly. Incorrectly performed procedures could result in equipment damage or malfunction.

This icon is used to draw your attention to information that may improve your understanding of the equipment or procedure.

© Tait Limited December 2013 (Draft)

Associated Documentation

The current set of TB9400 product documentation is provided in PDF format on the product CD. Updates are made available on the Tait support website. Printed copies of the documentation are available on request.

- TB9400 Specifications Manual (MBC-00002-xx).
- TaitNet P25 Trunked (TB9400) System Manual (MBA-00064-xx).

The characters **xx** represent the issue number of the documentation.

Technical notes are published from time to time to describe applications for Tait products, to provide technical details not included in manuals, and to offer solutions for any problems that arise. The product CD includes technical notes that were available at the time of release. Look for new or updated technical notes on the Tait support website.

Publication Record

Issue	Publication Date	Description
1	May 2012	First release
2	November 2012	General updates for version 1.15 release. Information added on compliance standards, marshalling duration, firmware download procedure, and restricted port numbers.
3	May 2013	General updates for version 1.20 release and the B3-band base station. Front end tuning procedure added.
4	August 2013	General updates for version 1.25 release and the H-band base station. Information added for dual 50W and receive-only base stations.

© Tait Limited December 2013 (Draft)

1 Description

The Tait TB9400 base station is a robust state-of-the-art digital fixed station that combines Tait's proven strengths in reliability, high performance and modular design with software-based configurability and operation, digital signal processing and voice-over-IP technology.

The base station is designed for operation in a Project 25 trunked or trunked simulcast radio network. The ability of the base station to link stations using standard Internet Protocol communications, and to add features through software options ensures that P25 systems designed with the TB9400 are scalable in both size and functionality.

The base station combines industry-leading digital voice quality with rugged design specifications and intuitive user interfaces. These products have been designed to meet the demanding needs of the public safety and public service sectors.

Its Ethernet interface provides built-in network connectivity, allowing the TB9400 to join with other TB9400 base stations to form a channel group. This network supports voice over IP and remote management of all base stations via a web browser.

1.1 Features

The following are some of the features of the base station:

- Fully compliant with the Project 25 Common Air Interface. Can therefore interoperate with any similarly compliant radios.
- Linear power amplifier allows operation with Linear Simulcast Modulation (LSM). Future software upgrades will also allow P25 Phase 2 operation (H-DQPSK modulation).
- Integrated built-in voting facility. No external voter is needed.
- Can be completely managed remotely from a PC running a web browser: configuration, alarm monitoring, fault diagnosis, feature and firmware upgrades. Alarms can also be reported via SNMP traps, allowing integration with an SNMP-based network management system.
- An integrated wiring solution is provided for the system control bus and DC power connections to each module in the subrack.
- Reciters (receiver/exciter modules) can be replaced without affecting the operation of other reciters in the same subrack.
- Rugged construction with generous heatsinks and fan-forced cooling for continuous operation from –30°C to +60°C (–22°F to +140°F).

© Tait Limited December 2013 (Draft)

1.2 Modules

The base station consists of a subrack with up to two transmit/receive channels, or up to two receive-only channels.

Receive-only base stations are currently available for operation only on B3 band (148 MHz to 174 MHz[1]).

The single PMU (power management unit) supplies and manages power to the whole subrack (refer to "Theory of Operation" on page 19). One reciter and one PA (power amplifier) are needed for each transmit/receive channel. The PA is not required for a receive-only base station. There is also a front panel with user controls and fans. The modules are interconnected at the front of the subrack. External connections to the modules are located at the rear.

Modules come in different variants depending, for example, on the RF band or the supply voltage.

Each module is inserted into the 4 U subrack from the front and is secured at the front with a metal clamp. Both clamp and module are easily removed for rapid module replacement. The modules are secured laterally with plastic guides that clip into the top and bottom of the subrack. These guides can be easily repositioned to change the configuration of a subrack. The heavier modules are also secured laterally by metal tabs at the rear of the subrack.

The following provides a brief description of the available modules.

Reciter

The reciter module comprises the receiver, exciter and digital control circuitry. The reciter provides the Ethernet interface and system inputs and outputs.

Receive-only reciters are not fitted with the transmit circuitry and are physically unable to transmit.

1. Refer to "Frequency Bands and Sub-bands" on page 17.

Power Amplifier

The PA amplifies the RF output from the reciter and is available in 50 W and 100 W models.

The 50 W model mounts vertically in the subrack, while the 100 W model mounts horizontally as it has a wider heatsink. The 100 W PA is also fitted with an airflow duct.

50 W PA

100 W PA

Both models are designed to operate on the 28 VDC output provided by the PMU. PAs are not required in a receive-only base station.

Power Management Unit

The PMU provides the 28 VDC power supply for the modules in the subrack. It can operate on 120/230 VAC 50/60 Hz nominal, and 12, 24 or 48 VDC nominal. The input voltage can be AC, DC, or both AC and DC, depending on the model. The PMU also has an auxiliary DC output of 13.65 VDC, 27.3 VDC, or 54.6 VDC, depending on the model.

AC and DC PMU shown

© Tait Limited December 2013 (Draft)

Front Panel

The front panel is mounted onto the subrack with two quick-release fasteners. It incorporates the indicator LEDs, four-line LCD display, user controls, ambient temperature sensor and cooling fans.

The indicator LEDS allow some monitoring of the operational status of the base station. The user controls and display allow the technician to configure the IP address of each module. Refer to "Front Panel" on page 36 for more information.

ⓘ The microphone input and speaker are not used in this release of the TB9400.

Subrack

The 4U subrack is made of passivated steel and is designed to fit into a standard 19 inch rack or cabinet. The subrack is fitted with an interconnect board that connects the system control bus and power to the modules and front panel. The position of a module in the subrack is defined by the socket on the subrack interconnect board to which the module is connected by the system control bus.

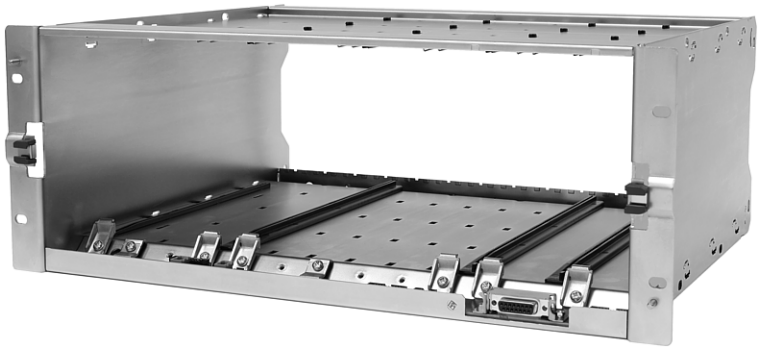

1.3 Mechanical Assembly

This section illustrates the main mechanical components of the base station.

Figure 1.1 below shows the configuration for a typical dual 50 W base station. The subrack has six slots, numbered from right to left as viewed from the front of the subrack. The PMU occupies slots 5 and 6, with the reciter and PA pairs to the right of it in slots 1 to 4. Each PA is mounted vertically with its heatsink facing its associated reciter. The PMU and each reciter/PA pair have their own cooling fans.

The front panel can be easily removed from the subrack by undoing two quick-release fasteners. Refer to "Replacing Modules" on page 99 for more details.

Figure 1.1 Mechanical assembly - dual 50 W base station with front panel

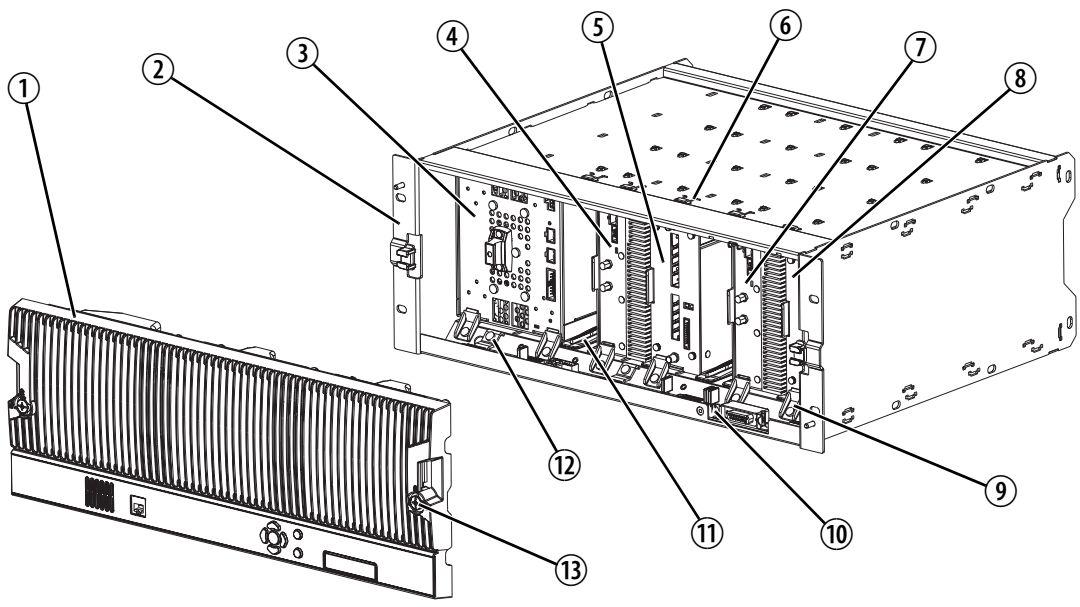

1. front panel
2. subrack
3. PMU
4. PA 2
5. reciter 2
6. cable retaining clip
7. PA 1
8. reciter 1
9. module retaining clamp
10. subrack interconnect board
11. plastic guide rail
12. subrack interconnect board retaining clamp
13. front panel fastener

© Tait Limited December 2013 (Draft)

Figure 1.2 below shows the configuration for a typical single 50 W base station. The PMU again occupies slots 5 and 6, with the reciter in slot 1 and PA in slot 2. The PA is mounted vertically with its heatsink facing the reciter. The PMU and the reciter/PA pair have their own cooling fans.

Figure 1.2 Mechanical assembly - single 50 W base station

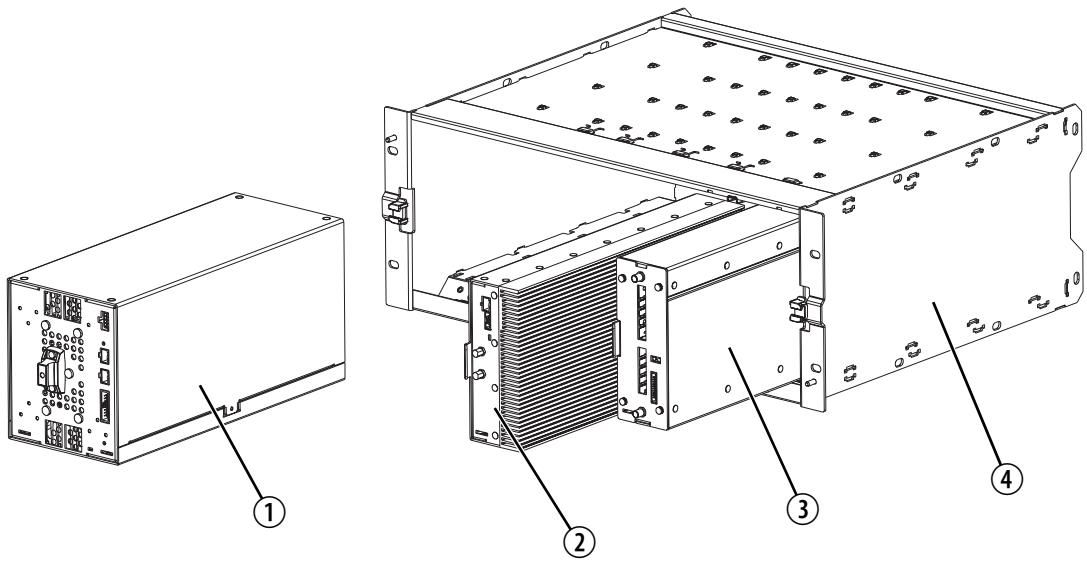

① PMU

② 50 W PA

③ reciter

④ subrack

Figure 1.3 below shows the configuration for a typical 100 W base station. The PMU occupies slots 5 and 6, with the PA directly beside it in slots 3 and 4. The reciter occupies slot 1. Unlike the 50 W PAs, the 100 W PA is mounted horizontally with the heatsink facing upwards. It is also fitted with an airflow duct to channel the airflow from the cooling fan through the heatsink fins.

Figure 1.3 Mechanical assembly - single 100 W base station

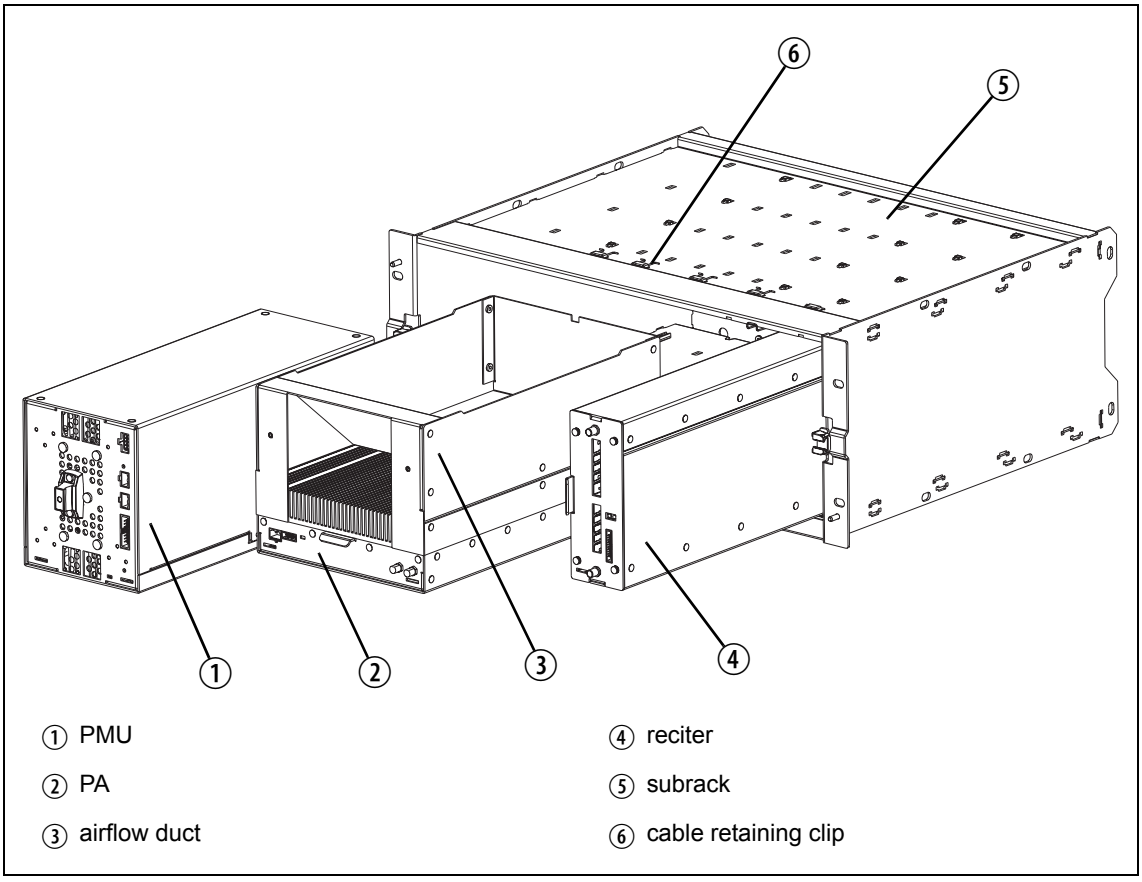

© Tait Limited December 2013 (Draft)

1.4 Frequency Bands and Sub-bands

Much of the circuitry in the base station is common to all frequency bands, and is therefore covered by a single description in this manual. In some cases the descriptions refer to specific bands or sub-bands, and these are identified with the letters listed in the following table.

Frequency Identification	Frequency Band and Sub-band
B band	B3 = 148 MHz to 174 MHz
H band	H1 = 400 MHz to 440 MHz H2 = 440 MHz to 480 MHz
K band	K4 = 762 MHz to 870 MHz[a]

a. The actual frequency coverage in this band is:
Transmit: 762 MHz to 776 MHz, and 850 MHz to 870 MHz
Receive: 792 MHz to 824 MHz

1.5 Applications

The TB9400 is designed for operation in a Tait P25 trunked radio network. It can operate as a single base station or as part of a simulcast channel group, and as a traffic channel or control channel.

In a trunked simulcast network, the transmitters in the channel group are synchronized and transmit simultaneously on the same frequency. Each transmitter needs a highly accurate 1 PPS pulse and an external frequency reference, so that it can time transmissions with the required accuracy. We also recommend using an NTP server at each site, as this will ensure a common timestamp in logs across all units in the system.

The base station can be provided as a receive-only variant in systems that need sites to enhance the receive coverage. The reciter in a receive-only base station is physically unable to transmit.

For more information, refer to the appropriate Tait P25 System Manual.

© Tait Limited December 2013 (Draft)

1.6 Licenses

Some operational functions of the base station are controlled by licenses. These functions will not work unless you purchase the appropriate feature license and enable the feature set controlled by that license. The feature sets currently available are listed below.

P25 Common Air Interface

Allows the base station to go into Online mode. Base stations are always provided with this license.

P25 Trunking Operation

Allows the base station to participate in a trunking system. Without this feature, the base station cannot provide a control or a status connection to a trunking site controller and it cannot function as a control or traffic channel.

Networking with Centralized Voter

This feature is required in any base station that is used in a voted configuration, such as simulcast. It also allows a base station to act as a central voter.

Simulcast Transmitter

This feature is required in base stations that have transmitters and belong to a simulcast network.

Linear Simulcast Modulation

Allows the base station to transmit using the LSM modulation scheme. This scheme allows increased site separation in simulcast networks.

Failsoft for P25 Trunking

Allows trunked channels that become isolated from a site controller to perform simple conventional operation and to interface to a digital dispatch system. If a trunked channel consists of several base stations in a channel group, only the central voter (normally the master) needs this license. It is then able to become the failsoft repeater for that channel group.

P25 Phase 2 Operation (not yet available)

This feature will allow the base station to operate in trunking mode using two-slot TDMA as defined by the P25 Phase 2 standard.

© Tait Limited December 2013 (Draft)

1.7 Theory of Operation

The reciter receives RF signals from its RF input and sends RF from its RF output to the PA, along with a PA key signal. The PA sends an RF feedback signal to the reciter for linearization and power control purposes. The reciter also receives signals from, and sends signals to, the system interface, the Ethernet interface, and the front panel (see Figure 1.4).

A system control bus interconnects the modules and carries alarm and control signaling between the reciter and the other modules.

The Ethernet interface carries voice over IP and also allows maintainer access via a web browser.

Figure 1.4 Base station high-level diagram

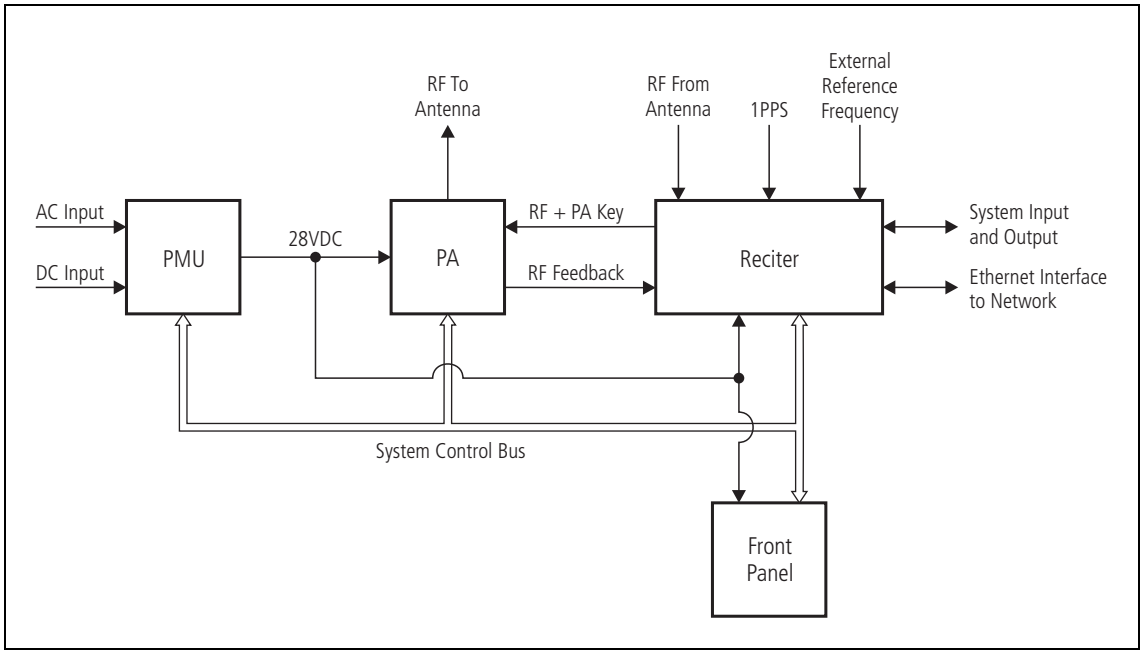

The reciter carries out signal processing and has overall control of the base station. Its circuit boards are shown in Figure 1.5.

Figure 1.5 Reciter boards

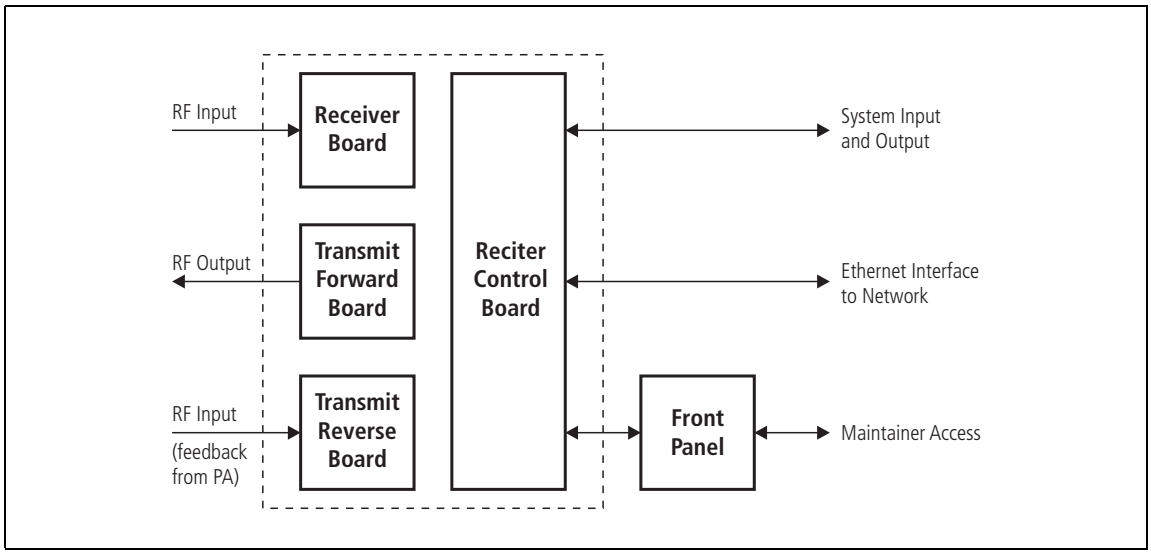

The receiver board contains all the receiver circuitry, while the exciter circuitry is located on the transmit forward board.

The reciter control board converts information between analog and digital and controls the maintainer's access via the front panel. It performs the air interface signal processing for digital P25 mode, gives the base station an identity as a network element, and provides the physical connections for the Ethernet and system interfaces.

© Tait Limited December 2013 (Draft)

1.7.1 Signal Paths

Figure 1.6 gives an overview of signal paths within the reciter.

Figure 1.6 Reciter signal paths

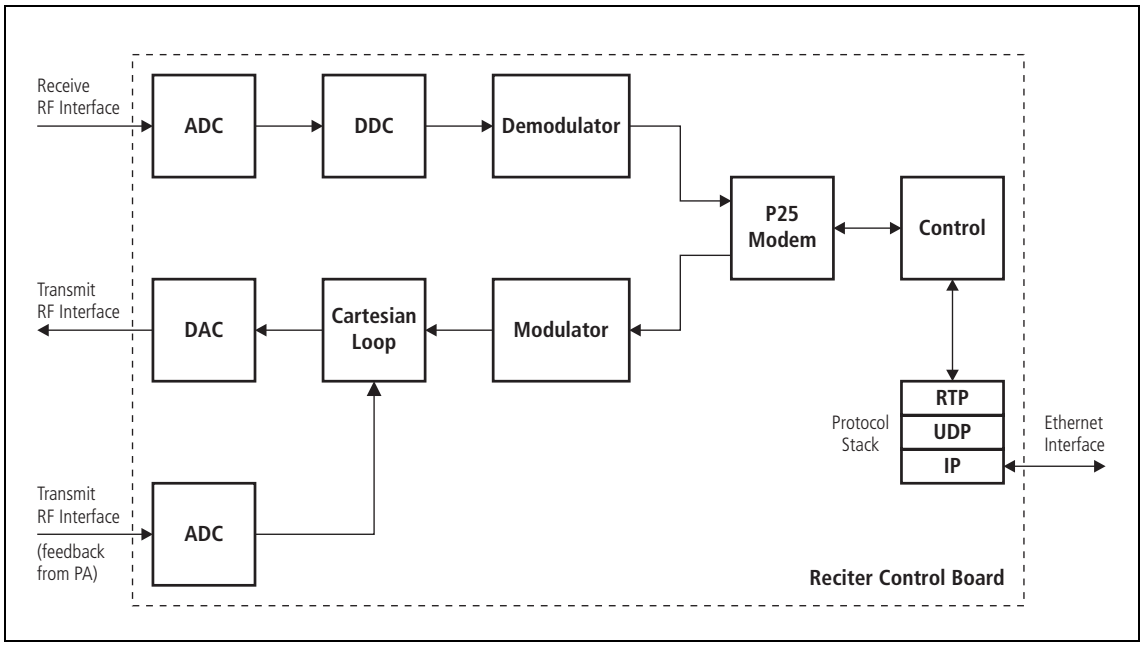

Digital P25 signals from the receive RF interface pass through the digital receiver and P25 modem to the control software in the RISC processor. The control software passes the signal through the Ethernet interface to the site controller, or to the central voter in a simulcast system.

Input to the Ethernet interface can be from the site controller, or from the central voter in a simulcast system. These inputs are processed by the RISC and passed through the P25 modem to the transmitter. If the base station is itself a central voter, this input can also be a received signal, which is voted on and sent back through the Ethernet interface to the site controller.

1.7.2 Online and Offline Modes

The base station normally operates in Online mode, but you can put it into Offline mode via its web interface.

Online Mode

In Online mode, the base station performs its normal functions.

Offline Mode

Some procedures, such as activating firmware or running certain diagnostic tests, require the base station to be in Offline mode. This takes the base station out of service. However, the front panel is still operational and can be used in the normal way.

1.7.3 Intermodule Communications

A system control bus and a subrack interconnect board link the modules in the subrack and carry alarm and control signaling between the reciter and the other modules, as shown in Figure 1.7.

Specific configuration settings for dual base stations are described in "Recommended Configuration Settings" on page 75.

Figure 1.7 Intermodule communication paths

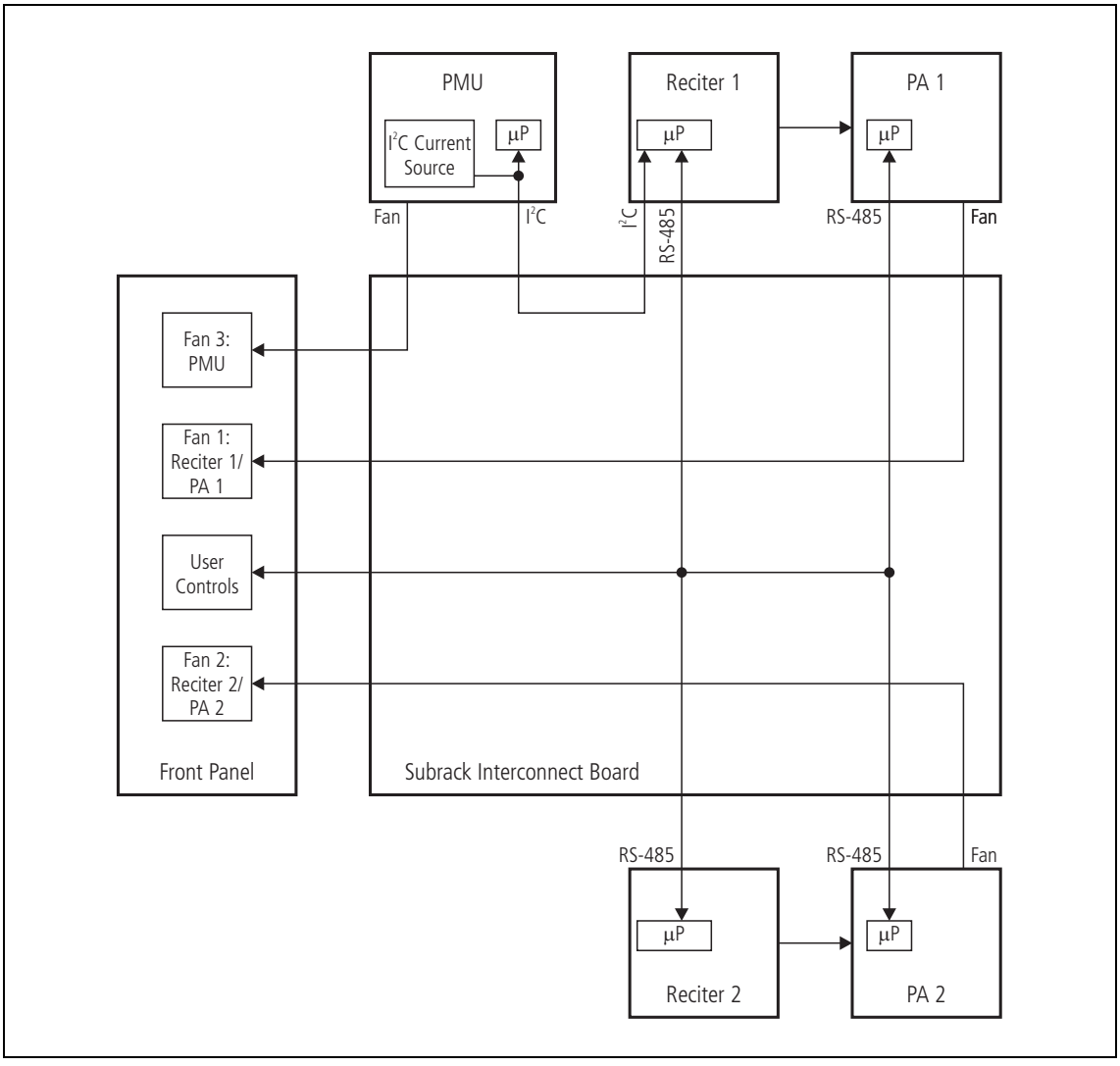

© Tait Limited December 2013 (Draft)

1.7.4 Power Management and Distribution

The PMU manages the supply of power to ensure uninterrupted operation of the base station. A range of parameters is monitored and these can trigger alarms that are sent to the reciter. Alarms can be monitored via the web interface and reported via SNMP traps; they are also recorded in the reciter's internal log file.

AC to DC Changeover

When the PMU has an AC and a DC module, the base station can be powered by either the AC (mains) or the DC (battery) supply. The base station will default to the AC supply if both supplies are provided. If the AC supply becomes unavailable, a seamless changeover from the AC to DC supply takes place, providing that the battery voltage is above the configured minimum startup voltage. You can use a web browser to check whether the base station is running on battery or mains power.

DC Operation

When the base station is running off the DC supply and the battery voltage falls below the configured minimum, the base station will enter battery protection mode to protect the battery and base station equipment. The standby power supply card maintains the power to the PMU microprocessor, while the rest of the PMU is shut down. When the battery voltage rises to the configured startup setting, power is resumed to the DC supply. Refer to "PMU Operation on DC Input" on page 25 for more detailed information.

Auxiliary Power Control

The output from the auxiliary power supply board can be used to power other site equipment. The maximum output is 40 W.

Distribution

Figure 1.8 shows how power is distributed to modules in the subrack. The 28 VDC output from the PMU is fed directly to the PA in a single base station, or directly to PA 1 in a dual base station, and to the other modules via the subrack interconnect board. Power to the reciters and front panel is current-limited by self-resetting fuses on the subrack board.

The AC converter has a series switch which breaks the phase input to the converter. The DC input, however, has much higher current ratings. Its switch does not disconnect power from the DC converter itself, but disables the converter by switching off its control circuitry.

The outputs from both the AC and DC high power converters are added together and fed to the modules via the high-current outputs. The auxiliary output is also tapped off this summed output.

© Tait Limited December 2013 (Draft)

Figure 1.8 Subrack power distribution

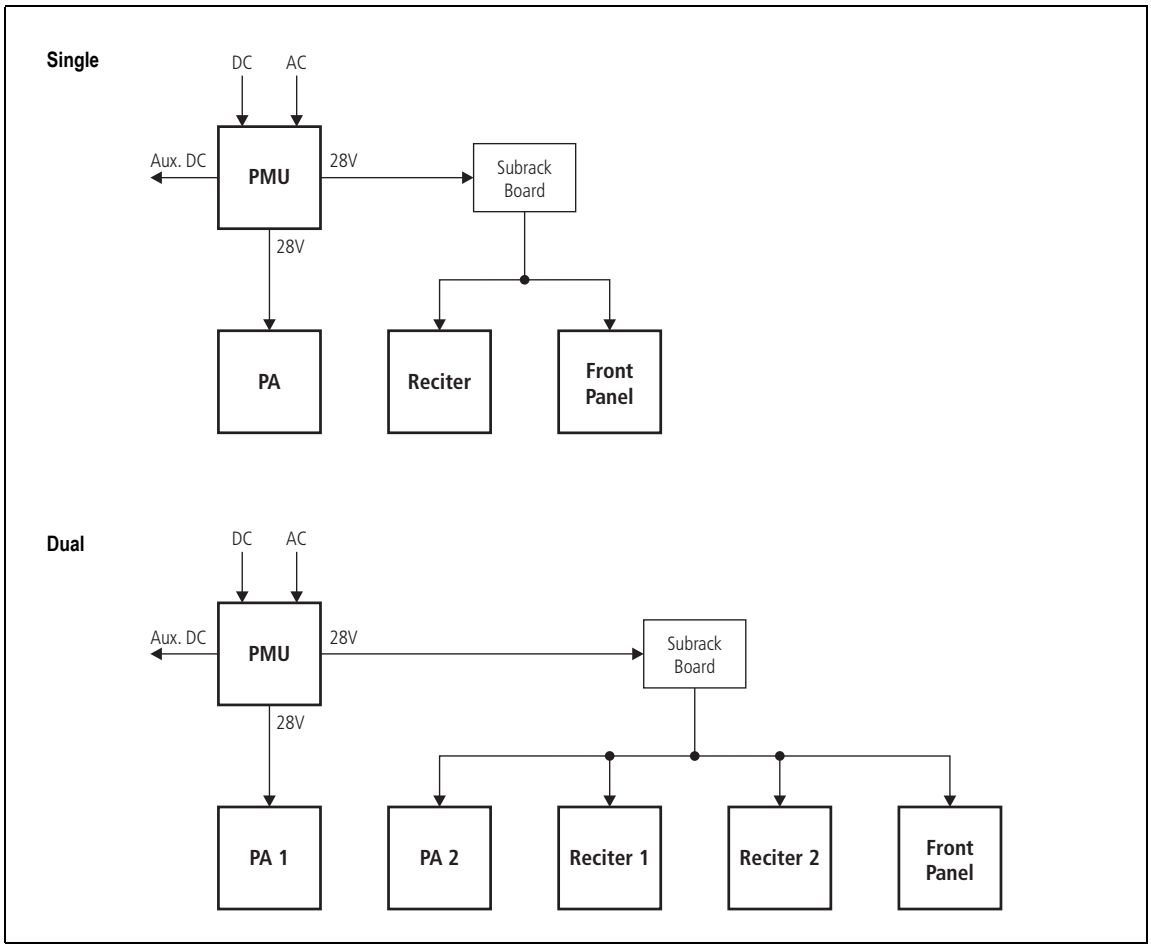

© Tait Limited December 2013 (Draft)

1.7.5 PMU Operation on DC Input

The operation of the PMU on DC input is controlled by three sets of parameters:

- user-programmable alarms
- user-programmable startup and shutdown limits
- battery protection limits

The voltage range for each of these parameters is provided in Table 1.1 on page 26. Figure 1.9 on page 27 illustrates how these parameters interact, and how they control the operation of the PMU over a range of DC input voltages.

Alarms

User-programmable alarms can be set for low or high battery voltage (Configure > Alarms > Thresholds). The alarms will be triggered when the set voltage levels are reached. These limits are subject to the tolerances of the battery protection circuitry, as stated in "Battery Protection (Fail-safe) Limits" in Table 1.1.

Startup and Shutdown Limits

The user-programmable startup and shutdown limits allow for adjustable startup and shutdown voltages (Configure > Base Station > Miscellaneous). These limits can be adjusted for different numbers of battery cells, or for the particular requirements of the base station operation. Once the limits are reached, the PMU will shut down. These limits are subject to the tolerances of the battery protection circuitry, as stated in "Battery Protection (Fail-safe) Limits" in Table 1.1.

> **Notice** It is possible to set the startup voltage of the base station below the nominal voltage of the battery. Continuing to use a battery for extended periods when it is below its nominal voltage will severely shorten its service life. For more information on battery management, we recommend that you consult the battery manufacturer.

Battery Protection Limits

The battery protection limits are set in hardware at the factory, and cannot be adjusted by the user. These limits will not be reached under normal operation conditions, but are provided as "fail-safe" measures to protect the battery from deep discharge. They also remove the need for low-voltage disconnect modules.

© Tait Limited December 2013 (Draft)

Table 1.1 PMU DC voltage limits[a]

Parameter	Voltage Range		
	12V PMU	24V PMU	48V PMU
User-programmable Alarms[b]			
Low Battery Voltage	10V to 14V	20V to 28V	40V to 56V
High Battery Voltage	14V to 17.5V	28V to 35V	56V to 70V
User-programmable Limits[b]			
Startup Voltage (after shutdown)	10.9V to 15V ±0.3V	21.8V to 30V ±0.5V	43.6V to 60V ±1V
Shutdown Voltage	10V to 13.5V ±0.3V	20V to 27V ±0.5V	40V to 54V ±1V
Battery Protection (Fail-safe) Limits			
Startup Voltage	10.8V ±0.2V	21.6V ±0.5V	43.2V ±1V
Undervoltage Shutdown	9.5V ±0.3V	19V ±0.5V	38V ±1V
Overvoltage Shutdown	18.1V ±0.3V	36.2V ±0.5V	72.4V ±1V
Overvoltage Shutdown Reset	17.1V ±0.3V	34.2V ±0.5V	68.4V ±1V

a. The information in this table is extracted from the Specifications Manual. Refer to the latest issue of this manual for the most up-to-date and complete PMU specifications.

b. Using the base station's web interface.

© Tait Limited December 2013 (Draft)

Figure 1.9 PMU alarm thresholds and voltage limits when operating on DC

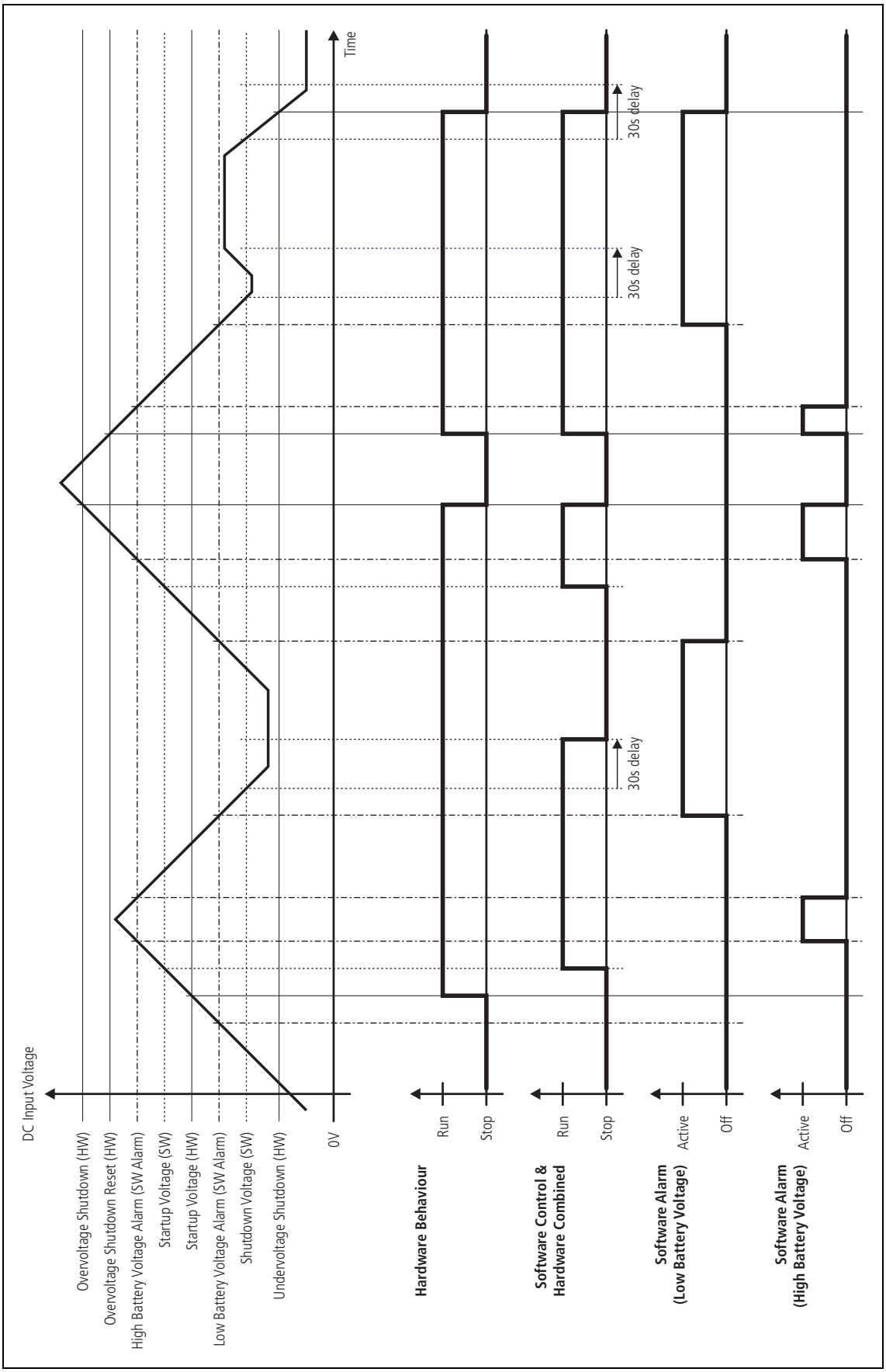

© Tait Limited December 2013 (Draft)

1.7.6 Front Panel Fans

The front panel is equipped with three fans. One fan is for the PMU and the other two are for the reciter/PA pairs in a 50 W base station, or for the PA and reciter in a 100 W base station. Front panel fans do not operate continuously, but are switched on and off as needed. The PMU and PA control their own fan. Reciters request the front panel to turn on their fan. The reciter in slot 1can also carry out a fan test on all three fans.

Front panel fans are 3-wire fans (power, ground, and rotation detect). The reciter can monitor whether the fans are rotating and generate an alarm if the fan fails.

The fans turn on for a few seconds when the base station is powered up, and also after the front panel is refitted to a base station which is powered up.

Configuring Fan Control

The operation of the PA fan is configurable via the web interface; you can specify the threshold temperature at which the fan will be turned on, and set the fan to operate only when the PA is transmitting.

The PMU fan has fixed on/off thresholds and a defined set of duty cycles based on the PMU temperature and load current, as described in the following table.

PMU Temperature	Current	Fan Duty Cycle
<149 °F (65 °C)	<4 A 4 A–6 A 6 A–8 A 8 A–12 A 12 A–14 A ≥15 A	always off 2 minutes on, 8 minutes off 2 minutes on, 5 minutes off 3 minutes on, 3 minutes off 4 minutes on, 1 minute off always on
149–167 °F (65–75 °C)	—	two minutes on, one minute off
>167 °F (75 °C)	—	always on

© Tait Limited December 2013 (Draft)

2 General Safety and Regulatory Information

This chapter provides general information on safety precautions for operating the base station.

2.1 Personal Safety

2.1.1 Unpacking and Moving the Equipment

To prevent personal injury and equipment damage, we recommend that two people unpack and move the equipment.

Caution A subrack complete with modules can weigh up to 55 lb (25 kg), or up to 62 lb (28 kg) complete with packaging. We recommend that you have another person help you unpack and move the equipment. The TBAA03-16 carrying handles will make it easier to move the equipment once it has been unpacked. If necessary, remove the modules from the subrack before moving it (refer to "Replacing Modules" on page 99). In all cases follow safe lifting practices.

2.1.2 Lethal Voltages

Warning **The PMU contains voltages that may be lethal. Refer to the ratings label on the rear of the module.**

The equipment must be installed so that the rear of the PMU is located in a service access area which is accessible only by qualified personnel. The PMU must be connected to the mains supply source by qualified personnel in accordance with local and national regulations.

Disconnect the mains IEC connector and wait for five minutes for the internal voltages to self-discharge before dismantling. The AC power on/off switch does not isolate the PMU from the mains. It breaks only the phase circuit, not the neutral.

The PMU should be serviced only by qualified technicians. There are no user-replaceable parts inside. If the PMU is damaged and does not function properly, stop the module safely and contact your regional Tait office immediately.

All servicing should be carried out only when the PMU is powered through a mains isolating transformer of sufficient rating.

© Tait Limited December 2013 (Draft)

2.1.3 AC Power Connection

English (en)	The PMU must be connected to a grounded mains socket-outlet.
Norsk (no)	Apparatet må tilkoples jordet stikkontakt.
Suomi (fi)	Laite on liitettävä suojamaadoitus-koskettimilla varustettuun pistorasiaan.
Svenska (sv)	Apparaten skall anslutas till jordat uttag.

2.1.4 Explosive Environments

Warning **Do not operate the equipment near electrical blasting caps or in an explosive atmosphere. Operating the equipment in these environments is a definite safety hazard.**

2.1.5 Proximity to RF Transmissions

Do not operate the transmitter when someone is standing within 3 ft (90 cm) of the antenna. Do not operate the transmitter unless you have checked that all RF connectors are secure.

2.1.6 High Temperatures

Take care when handling a PMU or PA which has been operating recently. Under extreme operating conditions (+140°F [+60°C] ambient air temperature) or high duty cycles, the external surfaces of the PMU and PA can reach temperatures of up to +176°F (+80°C).

2.1.7 LED Safety (EN 60825-1)

This equipment contains Class 1 LED Products.

2.2 Equipment Safety

2.2.1 Installation and Servicing Personnel

The equipment should be installed and serviced only by qualified personnel.

2.2.2 Preventing Damage to the PA

The base station has been designed to operate safely under a wide range of antenna loading conditions. Transmitting into a low VSWR will maximize the power delivered to the antenna.

Notice Do not remove the load from the PA while it is transmitting.

Load transients (switching or removing the load) can damage the PA output stage. See "Connecting RF" on page 90 for recommendations.

2.2.3 ESD Precautions

Notice This equipment contains devices which are susceptible to damage from static charges. You must handle these devices carefully and according to the procedures described in the manufacturers' data books.

We recommend you purchase an antistatic bench kit from a reputable manufacturer and install and test it according to the manufacturer's instructions. Figure 2.1 shows a typical antistatic bench set-up.

You can obtain further information on antistatic precautions and the dangers of electrostatic discharge (ESD) from standards such as ANSI/ESD S20.20-1999 or BS EN 100015-4 1994.

Figure 2.1 Typical antistatic bench set-up

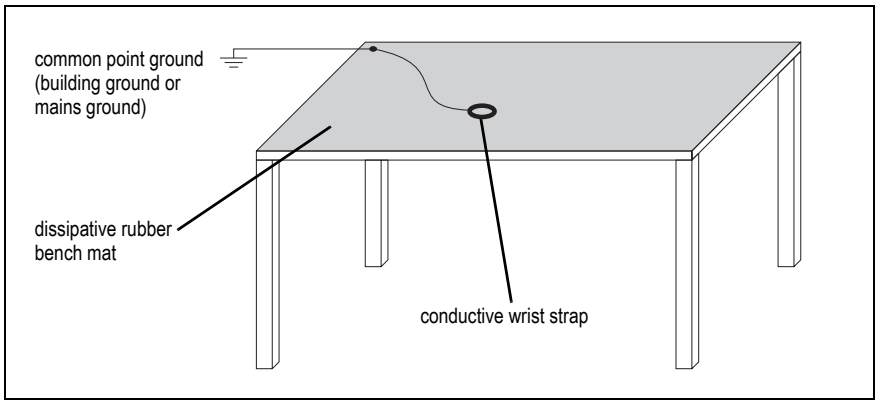

© Tait Limited December 2013 (Draft)

2.2.4 Anti-tampering Devices

All network elements should be physically secured, where possible. This includes the use of locked cabinets and the use of seals on connectors.

All network connectors should be sealed with the stick-on type of seal. The purpose of the seals is to detect unauthorized tampering. The seal should reveal if any of the connectors have been unplugged or if any unauthorized equipment has been plugged in.

The seals must be difficult to remove without breaking, and must bridge between the cable and equipment side (plug and socket) of the connection.

Seals must cover any unused network sockets. This includes the Ethernet connector on the rear panel, any spare switch ports, and the console port on the router and switch.

The seals must be difficult to reproduce. A sticker initialed or signed by the technician should satisfy this.

Seals must be replaced if they need to be disturbed during maintenance.

2.3 Environmental Conditions

2.3.1 Operating Temperature Range

The operating temperature range of the equipment is –22°F to +140°F (–30°C to +60°C) ambient temperature. Ambient temperature is defined as the temperature of the air at the intake to the cooling fans.

2.3.2 Humidity

The humidity should not exceed 95% relative humidity through the specified operating temperature range.

2.3.3 Dust and Dirt

For uncontrolled environments, the level of airborne particulates must not exceed 100 µg/m^3.

2.4 Regulatory Information

2.4.1 Distress Frequencies

The 406 to 406.1 MHz frequency range is reserved worldwide for use by Distress Beacons. Do **not** program transmitters to operate in this frequency range.

2.4.2 Compliance Standards

This equipment has been tested and approved to various national and international standards. Refer to the latest issue of the Specifications Manual for a complete list of these standards.

2.4.3 FCC Compliance

This equipment complies with:

- CFR Title 47 Part 15 Class B (except PMU):

  Radiated and conducted emissions, and electromagnetic susceptibility specifications of the Federal Communications Commission (FCC) rules for the United States.

  Operation is subject to the following two conditions:

  a. This device may not cause harmful interference, and

  b. This device must accept any interference received, including interference that may cause undesired operation.

- CFR Title 47 Part 15 Class A (PMU only):

  Radiated and conducted emissions, and electromagnetic susceptibility specifications of the Federal Communications Commission (FCC) rules for the United States.

  Operation is subject to the following two conditions:

  a. This device may not cause harmful interference, and

  b. This device must accept any interference received, including interference that may cause undesired operation.

2.4.4 Unauthorized Modifications

Any modifications you make to this equipment which are not authorized by Tait may invalidate your compliance authority's approval to operate the equipment.

The manufacturer is not responsible for any radio or TV interference caused by unauthorized modifications to this equipment. Such modifications could void the user's authority to operate the equipment.

© Tait Limited December 2013 (Draft)

3 Operation

This section describes the user controls and indicator LEDs on the front panel and on the base station modules.

© Tait Limited December 2013 (Draft)

3.1 Front Panel

The user controls and indicator LEDs on the front panel are shown in Figure 3.1. They allow some manual control over the base station and monitoring of its operational status.

Notice If there is more that one reciter in a subrack, inputs from all reciters are summed to drive the front panel LEDs.

Figure 3.1 Operating controls on the control panel

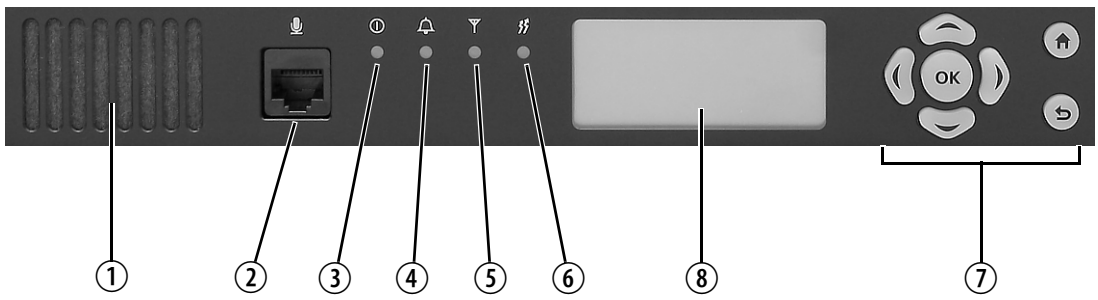

① speaker
② microphone connector
③ power LED
④ alarm LED
⑤ receive LED
⑥ transmit LED
⑦ keypad
⑧ display

① ② **Speaker and Microphone Connector**

The speaker and microphone connector are not used in this release of the base station.

③ **Power LED**

The green power LED is lit when power is supplied to the subrack.

④ **Alarm LED**

The red alarm LED will flash at a rate of 2 to 5 Hz when an alarm has been generated by any of the base station modules. It will continue to flash until the alarm is canceled or the fault is fixed. Note that only those alarms which are enabled using the web interface will cause this LED to flash.

LED	Description
Flashing	One or more faults are present.
On (steady)	A base station is in Offline mode, and no faults are present.
Off	A base station is in Online mode, and no faults are present.

© Tait Limited December 2013 (Draft)

⑤ **Receive LED**

The amber receive LED indicates whether the base station is receiving a valid RF signal.

LED	Description
On (steady)	A base station is receiving a valid RF signal.
Off	A base station is not receiving a valid RF signal.

⑥ **Transmit LED**

The amber transmit LED is lit while the transmitter is transmitting.

⑦ **Keypad**

The keypad is used to navigate the base station's menus, enter text, and to adjust the contrast of the display. The complete list of menu items is provided in "Menu Map" on page 39.

If required, the keypad can be disabled in the web interface to prevent access to the base station via the front panel menus (see "Disabling the Front Panel Keypad" on page 60).

Key	Name	Function
	left and right arrow keys	■ Move the cursor to the left or right when entering text. Moving the cursor beyond the end of a line will return it to the other end of the same line. ■ Decrease or increase the contrast in the Display Contrast screen.
	scroll keys	■ Scroll up and down through a list of menu items. ■ Scroll up and down through the list of available characters when entering text. ■ Increase or decrease the contrast in the Display Contrast screen.
OK	OK	■ Selects the highlighted menu item. ■ Confirms any adjustments made and exits to the previous menu. ■ When setting the IP address, moves the cursor down one line. When all the IP addresses are confirmed, exits to the previous menu.
	home	■ Returns to the home screen from any other menu.
	return	■ Returns to the previous menu. ■ Moves the cursor up one line in the IP address screen. When the top line is reached, pressing again returns to the previous menu.

ⓘ Unlike a computer keyboard, the keys do not auto-repeat. Each action requires a separate key-press.

⑧ Display

The display is used in conjunction with the keypad to access the base station's menus. It allows the technician to configure the IP address of each reciter (refer to "Setting the IP Address" on page 48), and to set the contrast of the display (see below).

After the base station is powered up, the display shows "Please wait…" while the base station is starting up, followed by the home screen when the start-up process is complete. The home screen shows four lines of user-defined text, which can be entered via the web interface (Identity > Identity > Base Station Identity).

From the home screen press an arrow key, a scroll key or OK to go to the base station menu. The display returns to the home screen from any other screen 30 seconds after the last key press. Press any key to turn on the backlight. The backlight turns off 30 seconds after the last key press.

ⓘ If the keypad has been disabled, pressing an arrow key, a scroll key or OK will cause the display to show "Keypad Disabled".

Set the display contrast as follows:

1. From the base station menu select Modules > Front Panel > Contrast.
2. To increase the contrast, press the right arrow or scroll up key. To decrease the contrast, press the left arrow or scroll down key.
3. When the contrast is set to the required level, press OK to save the changes and exit the menu.

© Tait Limited December 2013 (Draft)

Menu Map

The menu map below shows the menu items available in this release of the base station.

Notice The menu map shown is for a single base station. The menu items available in your base station will depend on which modules are present in the subrack, and whether the keypad has been disabled (refer to "Disabling the Front Panel Keypad" on page 60).

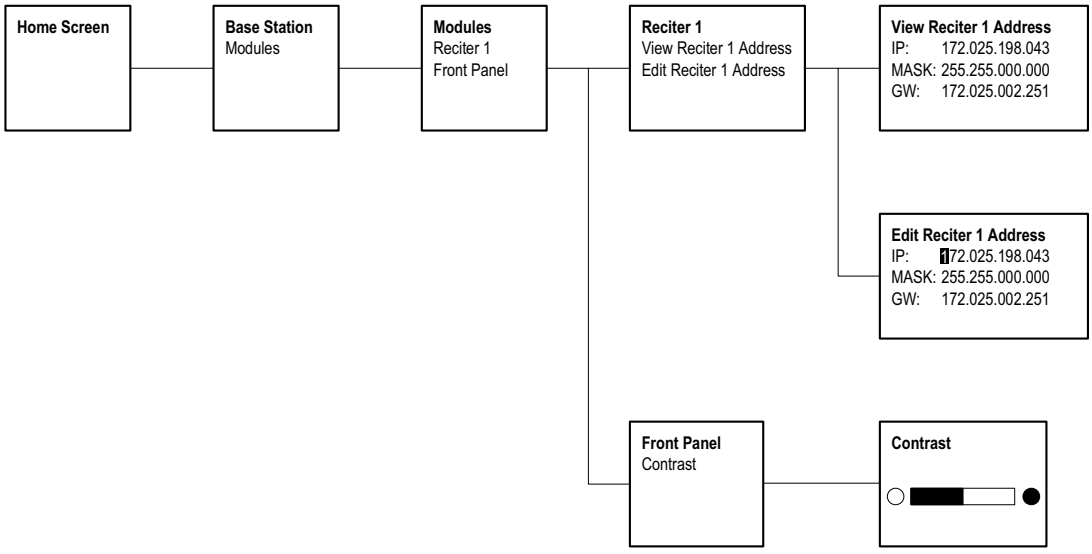

3.2 Module Indicator LEDs and Switches

Additional status information is displayed by LEDs in individual modules. The PMU also has switches that let you turn the AC and DC modules off.

3.2.1 Reciter

Front View

The indicator LEDs on the front of the reciter are visible through a slot in its front panel.

Figure 3.2 Indicator LEDs on the front of the reciter

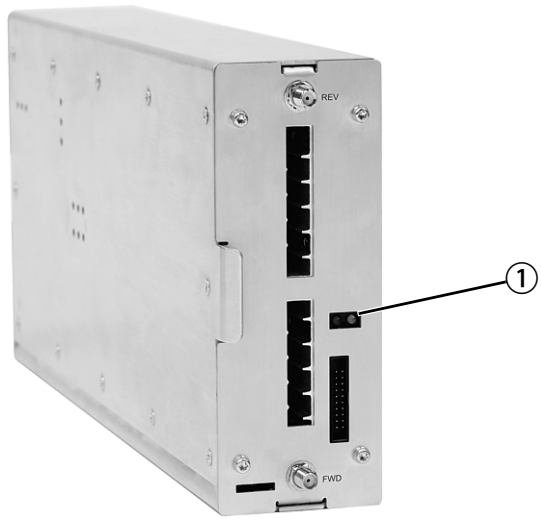

① indicator LEDs

These LEDs provide the following information about the state of the reciter:

- steady green - the reciter is powered up
- flashing red - one or more alarms have been generated; you can use the web interface to find out more details about the alarms.

© Tait Limited December 2013 (Draft)

Rear View The indicator LEDs on the rear of the reciter are on the Ethernet connector.

Figure 3.3 Indicator LEDs on the rear of the reciter

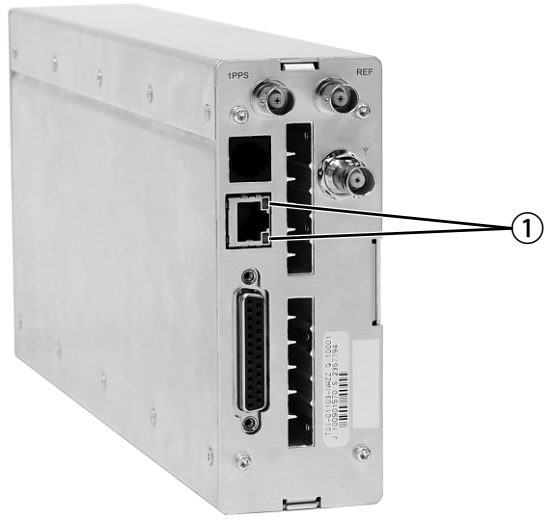

① indicator LEDs

These LEDs provide the following information about the state of the reciter:

- steady amber - the Ethernet interface is connected
- flashing green - data is being transmitted across the Ethernet interface.

3.2.2 PA

The indicator LEDs on the PA are visible through a slot in its front panel.

Figure 3.4 Indicator LEDs on the PA

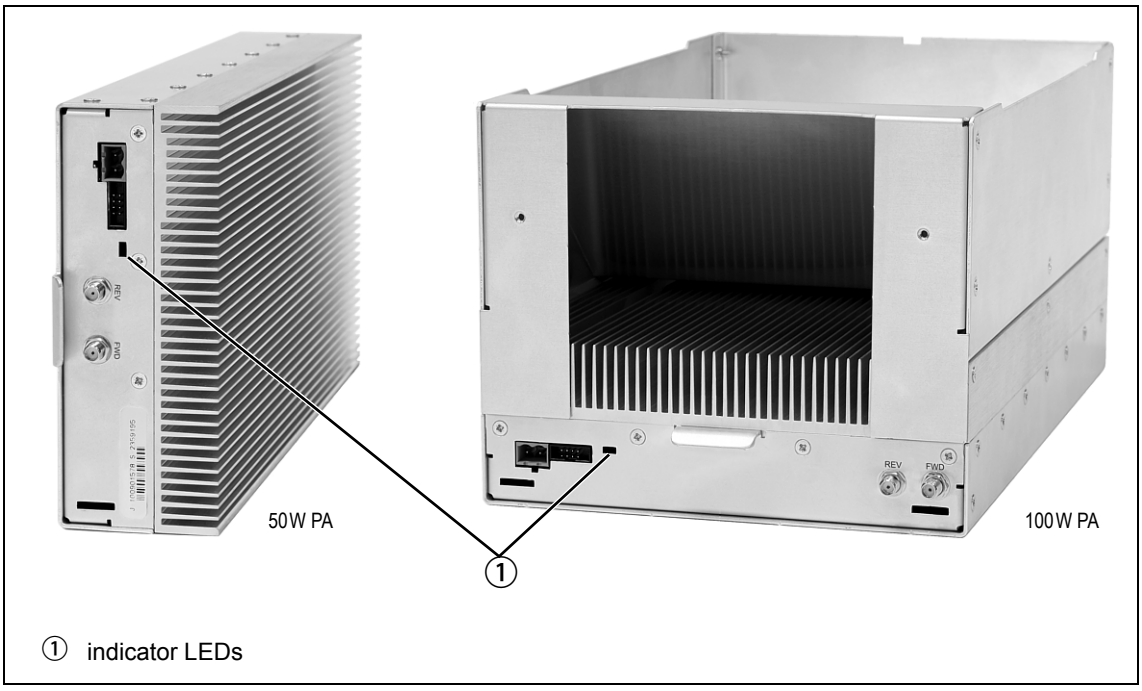

Indicator LEDs

These LEDs provide the following information about the state of the PA:

- steady green - the PA is powered up
- flashing green - the PA has no application firmware loaded or activated; you can use the web interface to download or activate the firmware; also see "Preparing to Download Firmware" on page 61
- flashing red - one or more alarms have been generated; you can use the web interface to find out more details about the alarms.

ⓘ The alarm LED will flash whenever an alarm is generated, whether or not this alarm has been disabled via the web interface.

© Tait Limited December 2013 (Draft)

3.2.3 PMU

The only controls on the PMU are the on/off switches on the rear panel for the AC and DC modules, and the indicator LEDs visible through a slot in its front panel.

Figure 3.5 Operating controls on the PMU

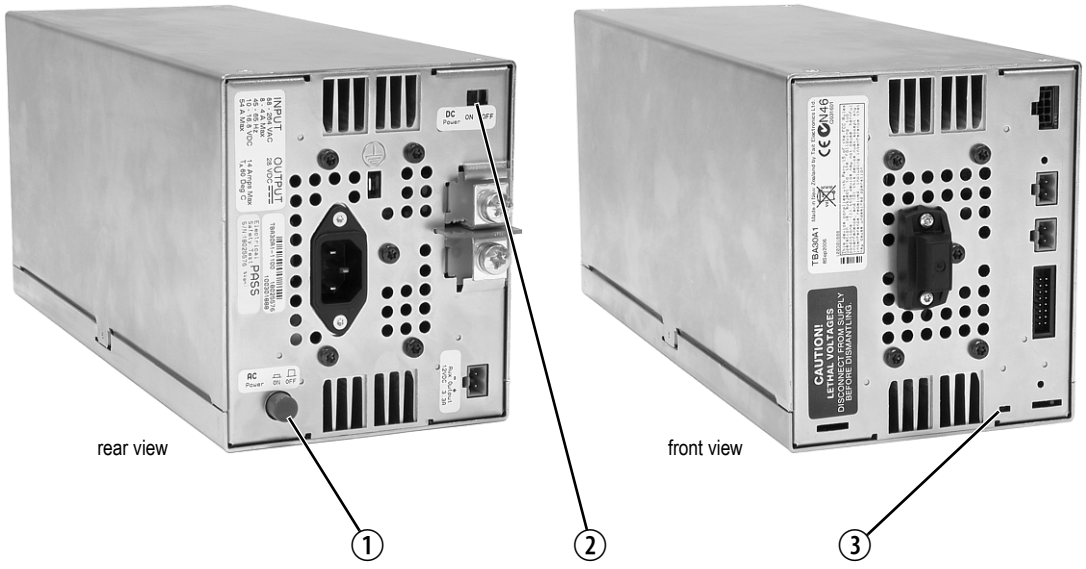

① AC module on/off switch

② DC module on/off switch

③ indicator LEDs

Warning **The AC and DC module on/off switches do not totally isolate the internal circuitry of the PMU from the AC or DC power supplies. You must disconnect the AC and DC supplies from the PMU before dismantling or carrying out any maintenance. Refer to the service manual for the correct servicing procedures.**

AC Module On/Off Switch

This switch turns the AC input to the PMU on and off. Note that this switch breaks only the phase circuit, not the neutral.

The red button remains “out” whether on or off.

DC Module On/Off Switch

This switch turns the DC output from the PMU on and off. Note that this switch does not disconnect power from the DC converter itself. It disables the converter by switching off its control circuitry. Even when the DC converter is off, the DC input is still connected to its power circuitry.

The switch is recessed to prevent the DC module being accidentally switched off.

Indicator LEDs

These LEDs provide the following information about the state of the PMU:

- steady green - the PMU is powered up
- flashing green - the PMU has no application firmware loaded or activated; you can use the web interface to download or activate the firmware; also see "Preparing to Download Firmware" on page 61
- flashing red - one or more alarms have been generated; you can use the web interface to find out more details about the alarms
- flashing red and green - the PMU is in battery protection mode; check that the battery voltage is above the configured minimum startup voltage; also check that the minimum startup voltage is configured correctly.

ⓘ The alarm LED will flash whenever an alarm is generated, whether or not this alarm has been disabled via the web interface.

© Tait Limited December 2013 (Draft)

4 Working with Base Stations from Your PC

The normal web browser on your PC provides a window into the TB9400 base station. Use it to connect to the base station so that you can monitor, configure, diagnose, and calibrate it (if required).

This section describes the following:

- Connecting to the base station, including initially setting things up.
- Working with base station web pages.
- Carrying out basic tasks.

This section provides an overview of some aspects of the web interface. Refer to the Help for detailed instructions.

© Tait Limited December 2013 (Draft)

4.1 PC Recommendations

We recommend the following PC hardware and software for connecting to a TB9400 base station:

- SVGA Monitor (1024 x 768 minimum).
- Network connection.
- Mozilla Firefox Extended Support Release (ESR), currently version 17.0.7; Microsoft Internet Explorer version 8 or version 9.

ⓘ The base station has been tested with these browsers, however other modern browsers should also be compatible.

4.2 Connecting Your PC to the Base Station

You connect to a base station using your web browser. Using multiple browser windows or tabs, you can view more than one base station and more than one page of any base station at once. Base stations have a web-based interface that provides the pages you view. Up to ten users may be logged in to a base station at once.

The base station has three different user access levels: Administrator, Maintainer, and Monitor. Passwords can be defined for each level. This is done using the base station's web interface (Tools > Tools > User Administration). Refer to the Help for more information on setting user access levels.

© Tait Limited December 2013 (Draft)

4.2.1 Logging In

1. Enter the base station's URL into your browser using a secure-socket connection(https://). To find out the base station's IP address, on the front panel select Modules > Reciter 1 (or 2) > View Reciter 1 (or 2) Address. To set the IP address, refer to "Setting the IP Address" on page 48.

   Notice If access to this menu has been disabled, you cannot use the front panel to find out the IP address. Make sure that you store the IP address securely and do not lose it.

2. A security warning appears when you connect for the first time. Proceed anyway (refer to "Responding to Security Warnings" on page 49).

3. The login screen appears.

4. Enter your user name and password. When connecting for the first time, enter the user name "admin" and password "tbc_admin".

5. Click **Login**.

   Notice After logging in we recommend that you change the password and username for your own security (refer to "Working with the Web Interface" on page 53). Make sure that you store your passwords and usernames securely and do not lose them. They may be needed by Tait support personnel if assistance is required. Tait cannot retrieve forgotten passwords.

4.2.2 Setting the IP Address

Before the base station is installed on site, you need to provide it with its proper IP address. Make sure that you do not lose this address. A quick way to set the base station's IP address is to use the front panel, as described below.

Notice If access to this menu on the front panel has been disabled, log in to the base station and set the IP address using the web interface (Identity > Identity > Network Identity).

1. Use the front panel display to enter the IP address, subnet mask and gateway specified for this base station by the IP addressing plan for the network. From the base station menu select Modules > Reciter 1 (or 2) > Edit Reciter 1 (or 2) Address. If the home screen is showing, press an arrow key, a scroll key or OK to clear it.

   Notice In this screen each octet in the address lines has provision for three characters. If an octet in the address has less than three characters, enter one or two leading zeroes so that each position is filled, even though the zeroes are not part of the address. For example, enter 172.25.163.47 as 172.025.163.047. Leading zeroes are removed when the address is programmed into the base station.

2. Set each address as described below. Use the left and right arrow keys to move the cursor across each line in the Addresses screen. Use the scroll keys to scroll through the available numbers for each position in a line.
   a. Set the IP address and press OK. This moves the cursor to the next line. To move the cursor back to the previous line, press the return key.
   b. Set the Mask address and press OK.
   c. Set the Gateway address and press OK.
   d. The display shows "Setting Reciter 1 (or 2) address Please wait..." while the base station confirms that the addresses are correct. When this process has finished, the display will show "SUCCEEDED" or "FAILED" as appropriate. Press OK to return to the previous menu.

3. If the process failed, try entering the address again. It it still fails, try the following:
   - enter the address through the web interface
   - check that the IP address you are trying to enter is not already in use by another device on the same subnet.

© Tait Limited December 2013 (Draft)

4.2.3 Responding to Security Warnings

When your browser connects to a TB9400 for the first time, it raises a security warning. Normally, secure websites have a security certificate issued by a trusted Certification Authority. This is to foil attempts by rogue websites to pretend to be something they are not. The TB9400 creates a self-signed certificate when the reciter's firmware is installed. Your browser raises a security warning because the security certificate was not issued by a trusted Certification Authority. The browser has a way of letting you override or bypass the security warning, as explained below.

You can be confident that you are not connecting to a rogue website pretending to be your TB9400, so follow the procedure below to tell the browser that the security certificate is OK. The browser then stores the security certificate and will not raise a warning on subsequent connections, unless the IP address of the TB9400 changes. For more information, refer to http://support.microsoft.com/kb/931850 (Internet Explorer) or search for "security certificate" in your browser's Help.

Firefox

1. When the message "This Connection is Untrusted" appears, click **I Understand the Risks**.
2. Click **Add Exception**.
3. The Location field includes details specific to your TB9400. Without changing the default values, click **Confirm Security Exception**.

Internet Explorer 8

1. Click **Continue to this website (not recommended)**.
2. Click **Certificate Error**.
3. Click **View certificates**. The Certificate dialog box, General tab is displayed.
4. Click **Install Certificate** and then follow the Certificate Import Wizard to install the certificate. Proceed to the end without changing the default values. When the Security Warning window appears, click **Yes**.

Internet Explorer 9

Click **Continue to this website (not recommended)**. Internet Explorer 9 does not provide a means of installing the certificate, however you can log into the base station as normal.

If you log out of the base station and then log back in, Internet Explorer may display a warning that it has blocked the website from displaying content. Click **Show content** to continue to the login screen.

4.2.4 Connecting a Networked PC to a Base Station

You may want to temporarily disconnect a networked PC from its LAN in order to be able to establish a direct connection with the base station. A physical connection is needed as well as an alternate (Windows 7, Windows Vista, Windows XP) or temporary (Windows 2000) IP address and subnet mask.

Windows 7 or Windows Vista

1. Remove the local area Ethernet connection and connect an Ethernet patch cable between the PC and the base station. You can use either a straight through or crossover Ethernet patch cable with the current base station firmware.
2. Navigate to Control Panel > Network and Internet > Network and Sharing Center.
3. Click **View status**.
4. In the Local Area Connection Status dialog box, click **Properties**.
5. In the Local Area Connection Properties dialog box, click **Internet Protocol Version 4 (TCP/IPv4)**, and then click **Properties**.
6. Click **Alternate Configuration**.
7. Select the User configured option, and then enter a number that is on the same subnet as the base station. For example, if the TB9400 has IP 192.168.1.2, enter 192.168.1.1 for the PC.
8. Enter a suitable subnet mask, for example 255.255.255.0.

   The web browser should now be able to connect to any physically connected base station that is on the same subnet.
9. Once the web browser session is finished, re-connect the local area network cable to the PC. The PC then uses its normal TCP/IP properties.

Windows XP Professional

1. Remove the local area Ethernet connection and connect an Ethernet patch cable between the PC and the base station. You can use either a straight through or crossover Ethernet patch cable with the current base station firmware.
2. Click Start > Settings > Control Panel.
3. Double-click **Network Connections**.
4. Double-click the Local Area Network icon.
5. Click **Properties**.
6. Click **Internet Protocol (TCP/IP)**, and then click **Properties**.
7. Click **Alternate Configuration**.

© Tait Limited December 2013 (Draft)

8. Select the User configured option, and then enter a number that is on the same subnet as the base station. For example, if the TB9400 has IP 192.168.1.2, enter 192.168.1.1 for the PC.

9. Enter a suitable subnet mask, for example 255.255.255.0.

   The web browser should now be able to connect to any physically connected base station that is on the same subnet.

10. Once the web browser session is finished, re-connect the local area network cable to the PC. The PC then uses its normal TCP/IP properties.

Windows 2000

1. Remove the local area Ethernet connection and connect an Ethernet patch cable between the PC and the base station. You can use either a straight through or crossover Ethernet patch cable with the current base station firmware.

2. Select Start > Settings > Network and Dialup Connections.

3. Double-click the Local Area Connection icon.

4. Click **Properties**.

5. Click I**nternet Protocol (TCP/IP)**, and then click **Properties**.

6. Note the current settings so that you can restore them later.

7. Select **Use the following IP address**, and then enter a number that is on the same subnet as the base station. For example, if the base station has IP 192.168.1.2, enter 192.168.1.1 for the PC.

8. Enter a suitable subnet mask, for example 255.255.255.0.

   The web browser should now be able to connect to the base station.

9. When you have finished the web browser session, re-connect the local area network cable to the PC and then restore the original PC configuration. When you close the Network connection dialog box, the restored configuration is applied.

4.2.5 Troubleshooting Connection Problems

If the attempt to connect to a base station failed, consider these possible causes.

1. Your PC is part of your organization's LAN and does not belong to the same subnet as the base station. Give the PC a suitable IP address and subnet mask as described in "Connecting a Networked PC to a Base Station" on page 50.

2. You are attempting to connect to the wrong IP address. Check that the IP address is correct.

   Notice You can quickly check the base station's IP address via the front panel, as long as access to this menu has not been disabled.

3. The link to the base station is down. Use ping to check.

4. You may have to bypass the proxy in your organization's LAN to access the Tait P25 Network. Ask your system administrator to give you access.

5. JavaScript may be disabled in your browser. If JavaScript is disabled, your browser will be unable to connect to the base station. Note that modern browsers normally have JavaScript enabled by default.

4.2.6 Finding a Lost or Forgotten IP Address

Use the following procedure if an IP address has been lost or forgotten.

1. Mount the reciter in a TB9400 subrack and fit the front panel. Power up the subrack.

2. On the front panel display select Modules > Reciter 1 (or 2) > View Reciter 1 (or 2) Address.

© Tait Limited December 2013 (Draft)

4.3 Working with the Web Interface

This section provides an overview of the web interface. Refer to the Help for detailed instructions.

When you connect to a base station, the browser displays a page like the following.

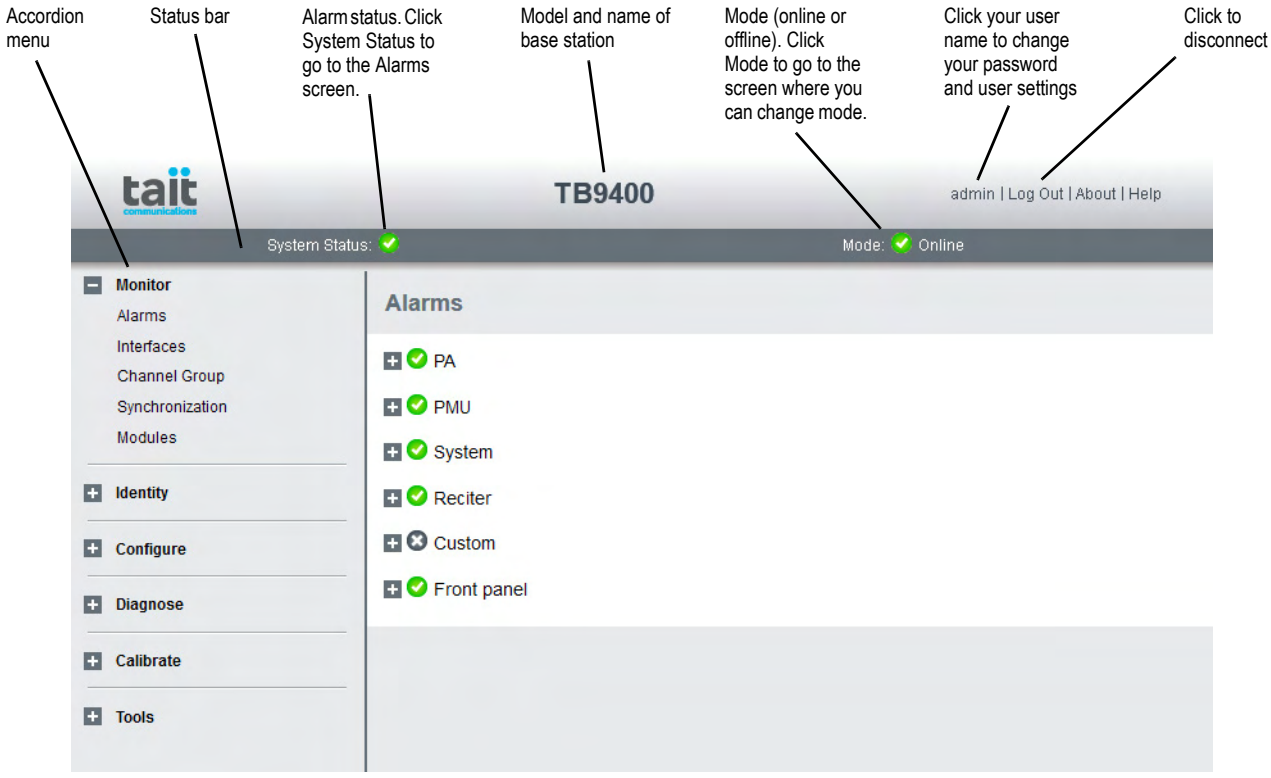

The accordion menu on the left gives you access to the various pages. Click a top level item (such as Configure) to open up its menu. Click on a menu item to display its page, then click on the appropriate tab on that page to display the required information. Click the + icon (⊞) on a menu item to expand the menu tree and the – icon (⊟) to collapse it again.

Press F11 for a full-screen display of the browser which does not show toolbars and other information. Press F11 again to return to the standard view.

4.3.1 Monitoring Operation

Using the monitoring pages, you can see how the base station is currently operating.

For example, you can see the status of its trunking interface (Monitor > Interfaces > Trunking).

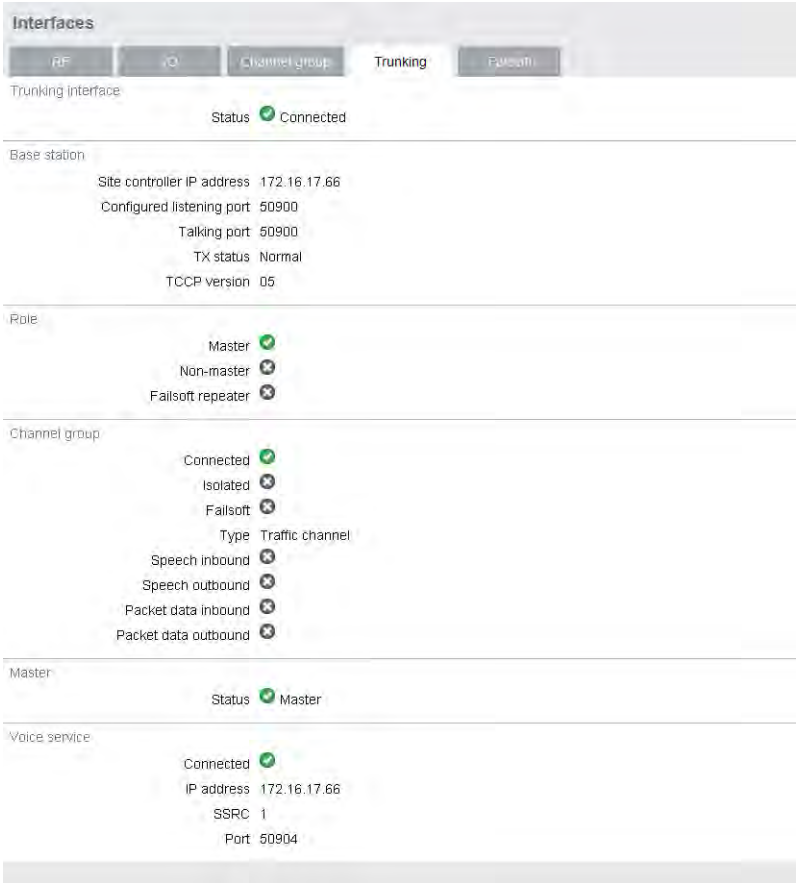

© Tait Limited December 2013 (Draft)

4.3.2 Viewing Configuration Settings

The base station has many configuration settings that personalize it for its particular role in the network. Some settings, such as those for the trunking interface (Configure > Network Interfaces > Trunking), always apply.

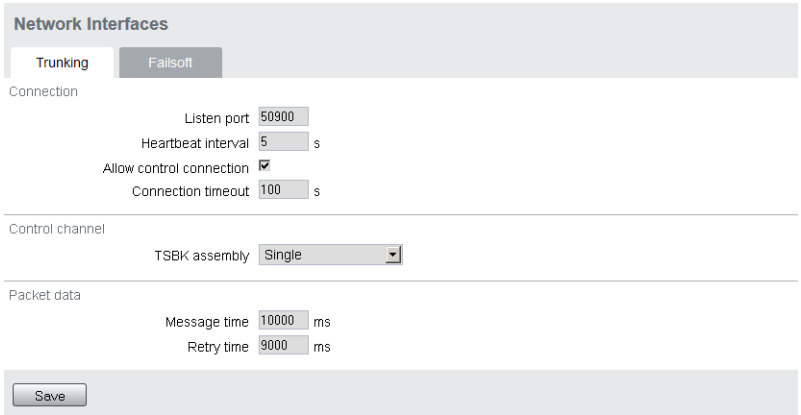

Others are channel-based so that they can be dynamically changed. To view these, you first need to know the channel that the base station is operating on. Select Identity > Identity > Base Station to see its default channel number. Then you can view the base station's channel configuration settings. Select Configure > Base Station > Channels to view the list of channels.

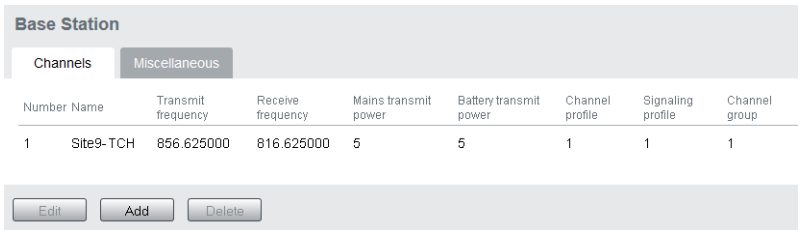

Select a channel and click **Edit** to view details of the channel. Clicking directly on any text in a line will also open the edit screen.

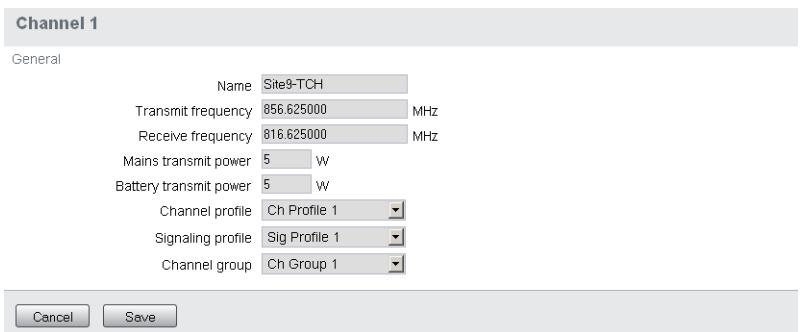

Channel and signaling settings are grouped together in profiles. The channel configuration indicates the number of the currently active profile. To view the channel profile settings, select Configure > RF Interface > Channel Profiles and then click the relevant profile number.

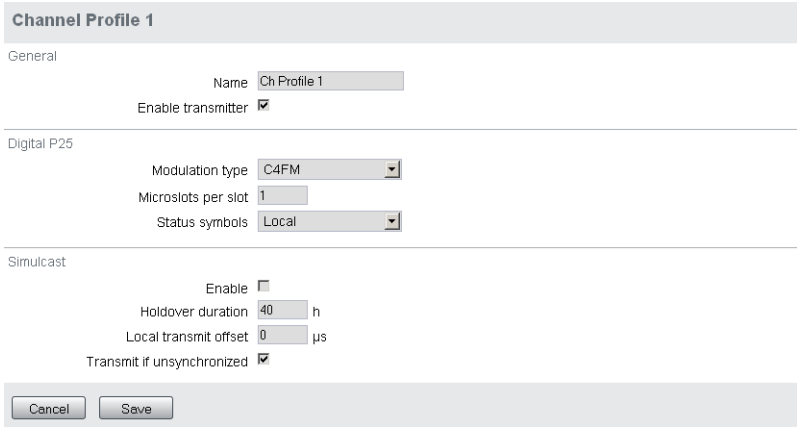

Proceed in a similar way to view signaling profile and channel group settings.

© Tait Limited December 2013 (Draft)

4.3.3 Viewing the Base Station and Network Identity

Each base station in a network has a unique base station and network identity.

Select Identity > Identity and then Base Station or Network to view details such as name, receiver number, default channel and network addresses. Note that the Host name field has a maximum of 63 characters, and may use the characters a–z, 0–9, dot and hyphen.

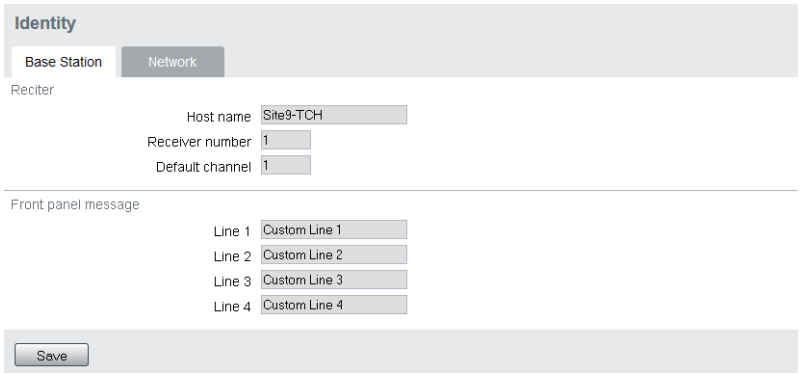

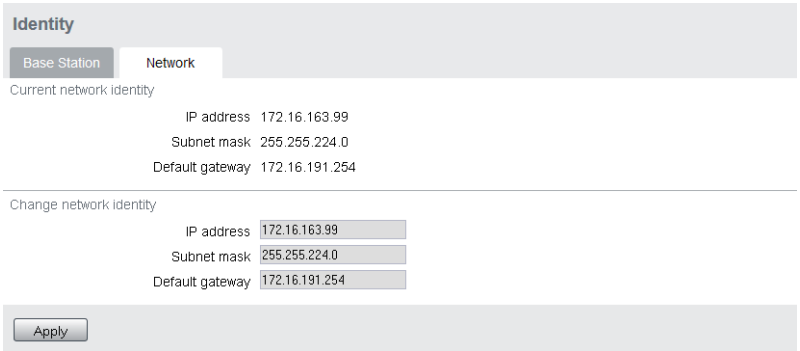

You can also enter here the four lines of information you want to appear on the home screen on the front panel display. Each line has a maximum of 20 characters.

4.4 Basic Tasks

4.4.1 User Settings

Click on your user name in the top right corner of the page to choose whether the temperature is displayed in Fahrenheit or Celsius[1], and to change your password. Note that this information is stored in the reciter, not in your browser.

4.4.2 Taking the Base Station Offline

You may need to take the base station offline in order to carry out diagnostic tests or to take it out of service if a fault develops.

1. Click Mode on the status bar (or Select Tools > Tools > Base Station).

2. Under Control, select Offline. Click **Offline** to confirm the change. In the Status area, the Mode display changes first to “Changing”, and then to “Offline” (⏏).

4.4.3 Troubleshooting Alarms

If the Alarm status on the status bar displays red, one or more alarms have been triggered, and the Alarms menu automatically expands to display the alarm(s). Click Help and navigate to the description of that alarm.

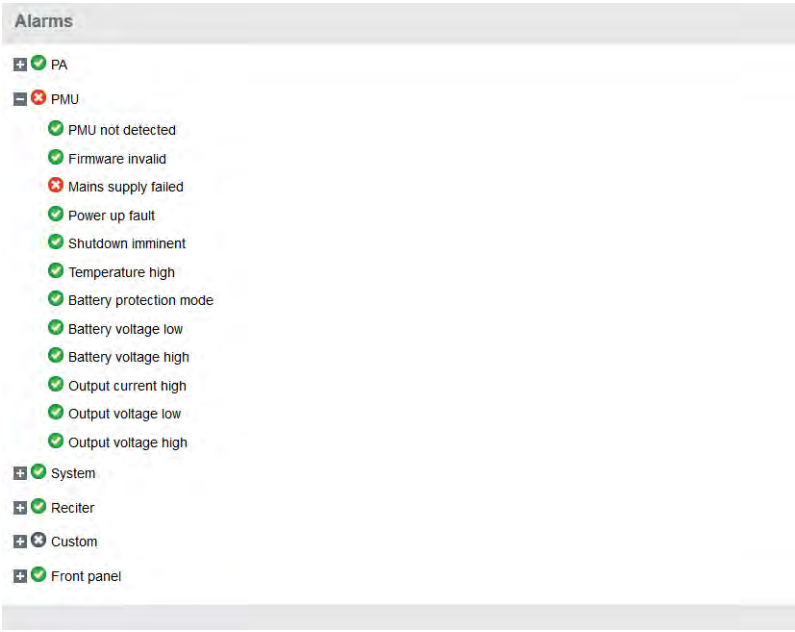

1. For this change to take effect, you must log out of the base station and then log back in again.

© Tait Limited December 2013 (Draft)

4.4.4 Working with Configuration Files

At any time, you can save the current configuration settings as a file (Tools > Files > Configuration). This is stored in the base station, but we recommend that you download it and store it on your computer as an off-site backup. The base station identity and network identity are not saved as part of the configuration file.

You may want to develop a master configuration and upload it to all base stations in the network. The master configuration can contain all the different channel configurations and can be common to all base stations. The base station identity selects the default channel.

ⓘ Base stations are delivered with a default configuration which provides a safe set of values. We recommend that you download it and store it on your computer as a backup before changing and saving any configuration settings.

4.4.5 Configuring Single Base Stations

Most base stations in non-simulcast trunked networks are single. They interface to a site controller but not to other base stations. The following explains the special considerations when configuring single base stations.

Channel Group Membership

Although single base stations are not actually part of a channel group, their channel configurations (Configure > Base Station > Channels) must still select a channel group (Configure > Channel Group > Channel Groups).

Channel Group IP Address

The selected channel group must be configured for single base station operation. Specify 127.0.0.1 as the channel group IP address. This stops the base station from attempting to send voice packets to other base stations.

Preamble

Although the single base station's transmitter does not receive voice packets from other channel group members, it still receives them from other base stations via trunking controllers. So, while most channel group settings have no effect, the preamble setting still applies and determines how large the transmit buffer is.

The default setting of 40ms is intended for internal jitter only. If the base station is a traffic channel, you may have to increase the preamble. Voice arriving at the base station's trunking interface has travelled from another base station via the trunking site controller and could have significantly more jitter.

Marshalling Duration

Although marshalling duration applies only to control channels, and has no effect on traffic channels, we recommend that you configure the marshalling duration for each base station as described below. This will allow any base station to operate as a control channel when required.

Configure the channel group settings to specify fixed marshalling and allow a duration of 40ms. This gives the control channel's transmitter an appropriate buffer (control channels do not use the preamble to regulate the transmit buffer).

Trunking Interface

Single base stations need a control connection to their site controller. A single base station interfaces to the site controller in the same way as the master base station in a trunked channel group. Select Configure > Network Interfaces > Trunking to configure this.

4.4.6 Configuring Base Stations in a Channel Group

You can configure the way the base station behaves in its channel group. Also, qualified network engineers can change DSCP assignments, so that routers and switches provide a different quality of service to different types of IP packets.

In trunked networks, many base stations are single and not actually part of a channel group. However, they still must be assigned to a channel group configuration and some of its parameters must be set correctly.

4.4.7 Setting Up Custom Alarms

Each of the base station's 12 digital inputs can be used to raise a custom alarm when the input goes high or low. The Custom Alarms form (Configure > Alarms > Custom Alarms) allows you to assign a name to each custom alarm, and to configure whether the alarm is triggered when the digital input goes high or low. Custom alarms are reported via the web interface and SNMP traps.

Custom alarms are used to provide an alarm when an external event activates a digital input. You can rename any of the available alarms to provide a more meaningful name, such as "Door open".

4.4.8 Disabling the Front Panel Keypad

You can disable the front panel keypad to prevent access to the base station via the front panel menus. Select Configure > Base Station > Miscellaneous and in the Front Panel area clear the **Keypad enabled** check box.

Notice If you disable the front panel keypad, you cannot use it to find out the base station's IP address. Make sure that you store the IP address securely and do not lose it.

© Tait Limited December 2013 (Draft)

4.4.9 Preparing to Download Firmware

New versions of base station firmware are remotely downloaded to base stations from a package server (a web server application). You can set up a single computer to be the central package server for all the base stations on your network, using a web server of your choice. Tait also provides the Mongoose[1] web server as part of the base station firmware package for use with a temporary package server, such as a laptop.

The base station firmware package is provided on the product CD, and can also be downloaded as a zip file from the Tait support website.

This procedure describes using the Mongoose web server.

Installing the Firmware Package

The installation procedure copies files into a folder and adds items to the Windows Start menu (Start > Programs > Tait Applications > TB9400). From the Start menu you can then access the Help, licenses, manuals and release notes for each firmware package, and also start Mongoose.

> You do not have to install Mongoose to make it work, because it is a self-contained executable file. Once started, it will run in the background until stopped, or the computer is shut down. Mongoose must also run from the same folder as the firmware files.

If you have a product CD:

1. Insert the product CD into the CD drive of the package server computer.
2. If the CD does not autorun, navigate to the CD's root folder and double-click *TB9400.msi* to run the Windows installer.

If you are downloading a base station package zip file:

1. Save the zip file to a suitable location on the hard drive of the package server computer.
2. Extract the zip file, then navigate to the root folder and double-click *TB9400.msi* to run the Windows installer.

Notice Tait recommends that the maximum length of the path to the location of the extracted files is 100 characters. Using a longer path may cause the files to be extracted incorrectly.

1. Mongoose runs on Windows only.

Setting Up a Central Package Server

It is beyond the scope of this manual to describe the exact procedure for setting up a central package server for any particular network. Tait expects that each customer will configure their own package server according to the requirements for their network.

However, you do need to configure each base station with the IP address and port of the package server computer.

1. Log in to the base station and select Configure > Base Station > Miscellaneous.
2. Under Package server, enter the IP address and port number of the package server.
3. Download the firmware as described in the Help.

Notice The base station has enough space for two firmware packages. If the base station already has two packages, delete the unwanted package before downloading another.

Setting up a Temporary Package Server

If you want to use a laptop as a temporary package server, you can temporarily override the package server IP address and port in each base station.

1. Run Mongoose on the package server (Start > Programs > Tait Applications > TB9400 > Mongoose).
2. Windows Firewall may raise a Security Alert about allowing Mongoose to access your network or the internet.
   a. In Windows 7 allow access to private networks.
   b. In Windows XP click Unblock.
3. Log in to the base station and select Tools > Firmware > Download.
4. Under Package server, enter the IP address of the laptop. The default port number is 8080.
5. Download the firmware as described in the Help.
6. If you have trouble with any of the above procedures, please consider the following points:
   - The firmware download process uses the HTTP protocol. If you are using a laptop from outside the radio communications network, make sure that HTTP traffic can get through the firewall.
   - If Mongoose fails to start, it may already be running, or another application may be using port 8080.
   - If the error message “Could not find index file” appears when listing packages, Windows security may be silently blocking access for Mongoose. Turn off the laptop’s WiFi and temporarily disable its firewall, then try again.

© Tait Limited December 2013 (Draft)

- The base station has enough space for two firmware packages. If the base station already has two packages, delete the unwanted package before downloading another.

© Tait Limited December 2013 (Draft)

5 Installation

This chapter provides information on the site requirements for your TB9400 equipment and also describes how to install the base station in a standard 19 inch rack or cabinet.

If this is your first time installing a TB9400 base station, we recommend that you read the entire chapter before beginning the actual installation.

© Tait Limited December 2013 (Draft)

5.1 Before You Begin

5.1.1 Equipment Security

The security of your base station equipment is a high priority. If the site is not fully secure, the base station should at least be locked in a secure cabinet to prevent unauthorized access.

5.1.2 Grounding and Lightning Protection

Electrical Ground

The base station modules are grounded by physical contact between the module case and the subrack. To ensure a good ground connection you must tighten each module retaining clamp securely (refer to "Final Reassembly" on page 110 for the correct torque).

A threaded grounding connector is provided on the rear of the subrack for connection to the site ground point (refer to "Connecting Up the Base Station" on page 86 for more details).

Lightning Ground

It is extremely important for the security of the site and its equipment that you take adequate precautions against lightning strike. Because it is outside the scope of this manual to provide comprehensive information on this subject, we recommend that you conform to your country's standards organization or regulatory body.

5.1.3 Equipment Ventilation

Always ensure there is adequate ventilation around the base station.

Notice **Do not** operate it in a sealed cabinet. You **must** keep the ambient temperature within the specified range, and we **strongly** recommended that you ensure that the cooling airflow is not restricted.

Notice The cooling fans are mounted on the front panel and will only operate when the panel is fitted correctly to the front of the subrack. To ensure adequate airflow through the base station, do not operate it for more than a few minutes with the front panel removed (e.g. for servicing purposes).

5.1.4 Ambient Temperature Sensor

The ambient temperature reading for the base station is provided by the temperature sensor located on the front panel circuit board.

© Tait Limited December 2013 (Draft)

5.1.5 Cabinet and Rack Ventilation

The cooling airflow for the base station enters through the front panel and exits at the rear of the subrack. For optimum thermal performance, the heated air that has passed through a base station must not be allowed to re-enter the air intakes on the front panel. Any space at the front of the cabinet not occupied by equipment should be covered by a blanking panel. Refer to Figure 5.1 on page 68.

To allow enough cooling airflow through a cabinet-mounted base station, we recommend the following:

- an area of at least 23 in^2 (150 cm^2) of unrestricted ventilation slots or holes in front of the air intakes for the fans for each subrack; for example, thirty 0.25 x 3.3 in (6 x 85 mm) slots will allow the recommended airflow
- a vent in the top of the cabinet with an area of approximately 23 in^2 (150 cm^2) per subrack, or a similar area of ventilation per subrack at the rear of the cabinet behind each subrack
- a 2 U gap at the top of the cabinet.

Notice The ventilation opening must be unrestricted. If the slots or holes are covered with a filter, mesh or grille, the open area must be increased to allow the same airflow as an unrestricted opening.

The maximum ambient temperature entering the cabinet must not exceed +140°F (+60°C).

If you are installing multiple subracks in a cabinet, ensure that there will be enough cooling airflow through the cabinet after the equipment has been installed. For example, the recommended maximum number of subracks in a 38 U cabinet is five, as shown in Figure 5.1 on page 68.

If the base station is installed in a rack or cabinet with other equipment with different ventilation requirements, we recommend that the base station be positioned below this equipment.

Auxiliary Extractor Fans

The base station does not require auxiliary extractor fans mounted in the top of the cabinet. If your cabinet is already fitted with fans, the following procedures apply:

- if there are six or more 4.75 in (12 cm) fans, each capable of extracting 94.2 ft^3 per minute (160 m^3 per hour), they must run continuously
- if there are fewer than six fans, you must remove them and ensure the vent in the top of the cabinet has an area of approximately 23 in^2 (150 cm^2) per subrack.

If you have any other configuration, the performance of your system will depend on how closely you comply with the base station airflow requirements described above.

© Tait Limited December 2013 (Draft)

Figure 5.1 Typical cabinet ventilation requirements

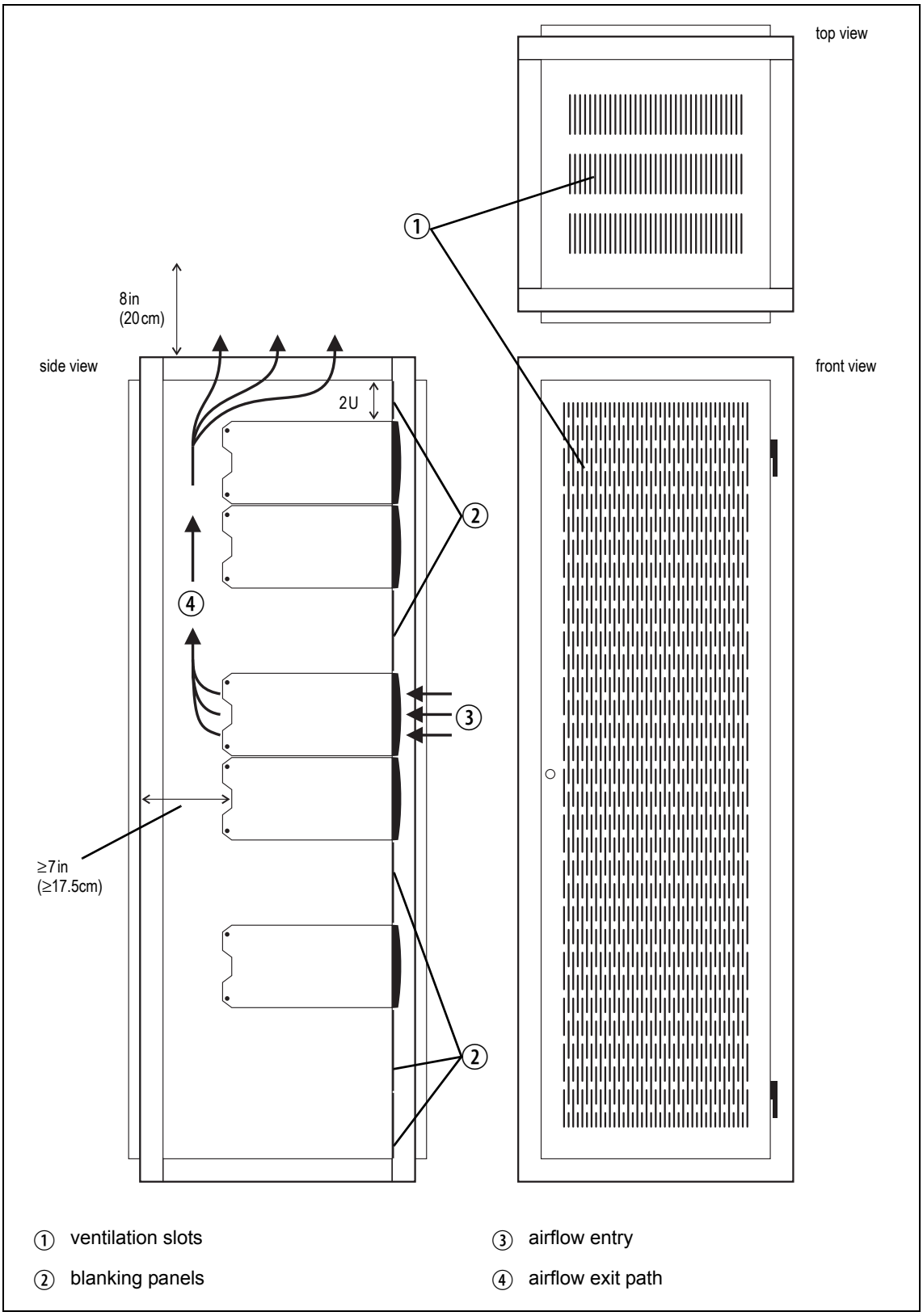

© Tait Limited December 2013 (Draft)

5.2 Unpacking and Moving the Subrack

The subrack is packed in a strong corrugated cardboard carton with top and bottom foam cushions. To prevent personal injury and damage to the equipment, we recommend that two people unpack and move the subrack. To remove the subrack from the carton, follow the procedure illustrated in Figure 5.2.

Caution A subrack complete with modules can weigh up to 46 lb (21 kg), or up to 53 lb (24 kg) complete with packaging. We recommend that you have another person help you unpack and move the equipment. The TBAA03-16 carrying handles will make it easier to move the equipment once it has been unpacked. If necessary, remove the modules from the subrack before moving it (refer to "Replacing Modules" on page 99). In all cases follow safe lifting practices.

Figure 5.2 Unpacking the subrack

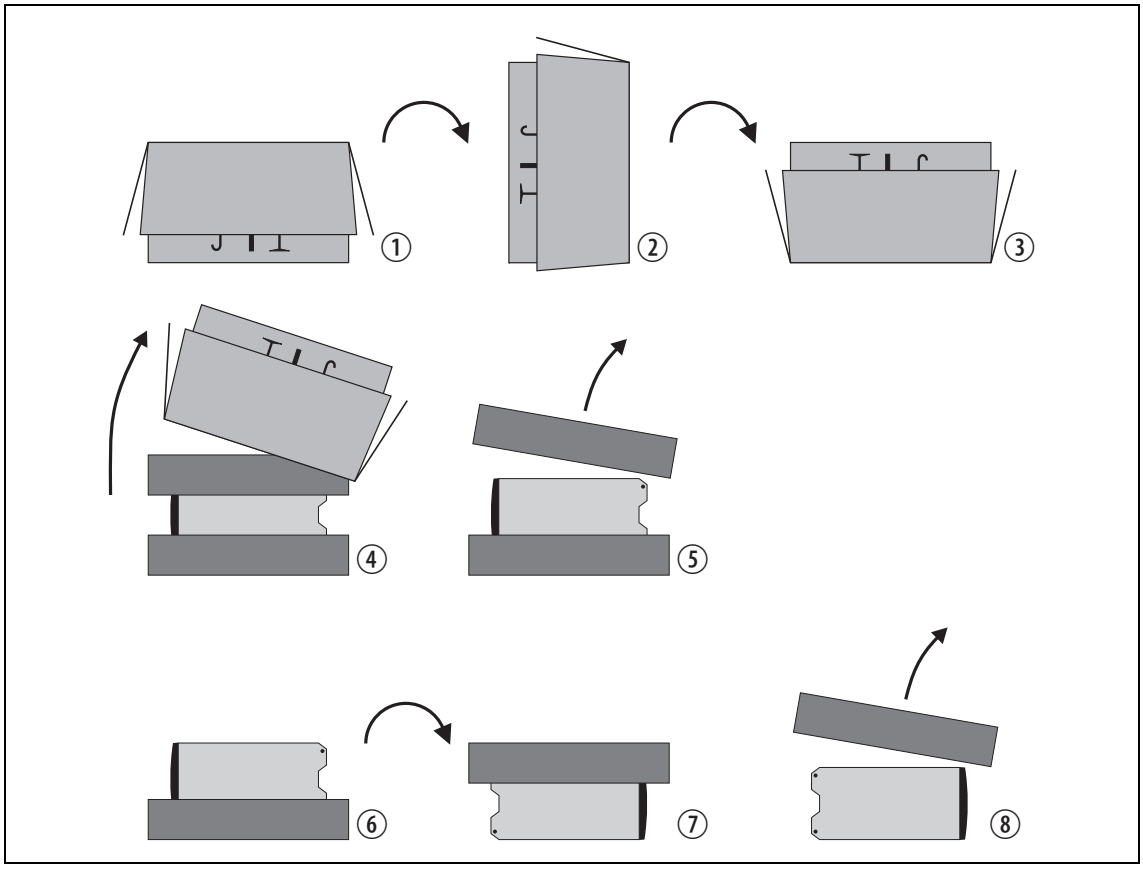

1. Cut the tape securing the flaps at the top of the carton and fold them flat against the sides ①.
2. Rotate the carton carefully onto its side ② and then onto its top ③, ensuring that none of the flaps is trapped underneath.

3. Slide the carton upwards over the foam cushions and lift it away ④. Remove the cushion from the bottom of the subrack ⑤.

4. Rotate the subrack and cushion carefully over the rear of the subrack ⑥ so that it is the right way up with the cushion on top ⑦. Remove the cushion from the top of the subrack ⑧.

Disposal of Packaging

If you do not need to keep the packaging, we recommend that you recycle it according to your local recycling methods. The foam cushions are CFC- and HCFC-free and may be burnt in a suitable waste-to-energy combustion facility, or compacted in landfill.

© Tait Limited December 2013 (Draft)

5.3 Identifying the Equipment

You can identify the model and hardware configuration of the TB9400 modules by referring to the product code printed on labels at the rear of each module. The meaning of each character in the product code is explained in the tables below.

ⓘ This explanation of product codes is not intended to suggest that any combination of features is necessarily available in any one product. Consult your regional Tait office for more information regarding the availability of specific models and options.

Reciter Product Codes

Product Code	Description	
T01-0110**X**-XXXX	3 = reciter 4 = receive-only[a]	
T01-0110X-**X**XXX	**Frequency Band** D = 148MHz to 174MHz K = 400MHz to 440MHz L = 440MHz to 480MHz N = 762MHz to 870MHz[b]	**Tait Band Identifier** B3 band H1 band H2 band K4 band
T01-0110X-X**X**XX	A = standard	
T01-0110X-XX**X**X	A = default	
T01-0110X-XXX**X**	A = default	

a. Receive-only base stations are currently available for operation only on B3 band.

b. The actual frequency coverage in this band is:
Transmit: 762MHz to 776MHz and 850MHz to 870MHz
Receive: 792MHz to 824MHz

PA Product Codes

Product Code	Description	
T01-01121-**X**XXX	**Frequency Band** D = 148MHz to 174MHz K = 400MHz to 440MHz L = 440MHz to 480MHz N = 762MHz to 870MHz[a]	**Tait Band Identifier** B3 band H1 band H2 band K4 band
T01-01121-X**X**XX	A = 50W B = 100W	
T01-01121-XX**X**X	A = default	
T01-01121-XXX**X**	A = default	

a. The actual frequency coverage in this band when used with a K-band TB9400 reciter is 762MHz to 776MHz and 850MHZ to 870MHz.

PMU Product Codes

Product Code	Description
TBA**X**XXX-XXXX	3 = PMU
TBA3**X**XX-XXXX	0 = default
TBA3X**X**X-XXXX	0 = AC module not fitted A = AC module fitted
TBA3XX**X**-XXXX	0 = DC module not fitted 1 = 12V DC module fitted 2 = 24V DC module fitted 4 = 48V DC module fitted
TBA3XXX-**X**XXX	0 = standby power supply card not fitted 1 = 12VDC standby power supply card fitted 2 = 24VDC standby power supply card fitted 4 = 48VDC standby power supply card fitted
TBA3XXX-X**X**XX	0 = auxiliary power supply board not fitted 1 = 12VDC auxiliary power supply board fitted 2 = 24VDC auxiliary power supply board fitted 4 = 48VDC auxiliary power supply board fitted
TBA3XXX-XX**X**X	0 = default
TBA3XXX-XXX**X**	0 = default

© Tait Limited December 2013 (Draft)

5.4 Initial Setting Up

Before putting the base station into service, you may want to carry out some basic functional testing, configuration, and tuning (if required). This section provides an overview of these procedures:

- checking that the base station powers up correctly
- checking the basic functionality of the base station by using the tests available in the web interface
- customizing the configuration for the intended installation and verifying that the configuration is correct
- changing the root password
- tuning the base station (if required).

5.4.1 Confirming Operation

Notice Make sure that the RF output is connected to a suitable attenuator or dummy load. Do not remove the load while the PA is transmitting as this may damage the PA output stage.

Applying Power

1. Apply power by turning on the PMU.
2. Check that the base station powers up correctly:
   - The front panel display will show “Please wait...” while the base station starts up (this may take up to two minutes). When the startup process is complete, the display will show the home screen.
   - The cooling fans in the front panel will run at full speed for a few seconds, then run at low speed while the base station starts up, and then assume standard operation. One or more fans may operate, depending on the temperature of the modules.

© Tait Limited December 2013 (Draft)

Functional Tests

The following table provides an overview of the tests available using the web interface. Refer to the Help for full details of these tests.

Test	Notes	Menu
receiver operation	requires a suitable RF source	Diagnose > RF Interface > Receiver
transmitter operation	requires connection to the network	Diagnose > RF Interface > Transmitter
synchronized transmit	checks the simulcast operation of a channel group or the transmitters in it	Diagnose > RF Interface > Synchronized Transmit
ping	checks the IP connection to another device with an IP address	Diagnose > Connection > Network
NTP query	checks if the NTP-based time synchronization is working	
PMU mains failure	requires a DC backup supply	Diagnose > Subsystems > PMU Control Tests
fan operation	checks the operation of each fan individually	Diagnose > Subsystems > Fan Tests

© Tait Limited December 2013 (Draft)

5.4.2 Customizing the Configuration

The following steps provide an overview of the process used to configure the base station with the settings it needs. Refer to the Help for detailed information.

1. Log in to the base station (refer to "Connecting Your PC to the Base Station" on page 46 for more details).

2. Select Configure. The base station has many different settings that can be configured before it is put into operation, such as:
   - channel configurations
   - alarm control and SNMP agent
   - network interfaces
   - channel groups and quality of service
   - channel and signaling profiles
   - CWID
   - miscellaneous items such as minimum battery voltages, fan control, NTP and package servers.

3. Make the changes needed in each form and click **Save**.

We recommend that you save the configuration to your PC or network. First make a backup copy of the configuration (which is stored in the base station as a file), then save this file to a folder on your PC or network. This provides a backup which can be restored to the base station if the configuration information becomes lost or corrupted.

5.4.3 Recommended Configuration Settings

In a dual base station only reciter 1 communicates directly with the PMU and front panel. Therefore the following configuration settings are recommended for dual base station operation:

- Disable the "PMU not detected" alarm on base station 2 (Configure > Alarms > Control > PMU).
- Disable the "FP not detected" alarm on base station 2 (Configure > Alarms > Control > Front panel).

© Tait Limited December 2013 (Draft)

5.4.4 Restricted Port Numbers

Certain configuration settings in the base station's web interface require you to enter a port number (for example, the trunking interface and channel groups).

Two ranges of port numbers are unavailable for use with the base station. The web interface will prevent you from entering a number from these ranges, as explained below.

Restricted Port Numbers	Details
0 – 1023	The "well-known ports", commonly used by other devices in a network. Using a port number in this range could cause compatibility problems with other devices.
12000 – 14999	Reserved for internal use in the base station. Using a port number in this range could cause the base station to malfunction.

5.4.5 Changing the Root Password

The root password to the Linux operating system of the reciter is a possible security risk. The equipment is delivered with a default password that is well known. Knowledge of the password could be used to render the equipment inoperable, for example by deleting files. If you are concerned about the security risk that this poses, change the password. If Tait provides support services, it may need to know the password.

Notice If you change the password and then lose it, the equipment must be returned to Tait. Make sure that you store the password securely and do not lose it.

To change the root password, follow these steps.

1. Log in from your PC to the base station using SSH client software such as PuTTY. The username is "root" and the default password is "k1w1".
2. At the # prompt, enter the command "passwd".
3. Follow the on-screen instructions.
4. Record the password in a secure location.

© Tait Limited December 2013 (Draft)

5.4.6 Tuning the Reciter

B3-Band Reciter

Before the base station is installed on site, you may need to tune the receiver front end. The receiver front end requires tuning if the receive frequency is shifted more than 2 MHz away from the previously set frequency, or the RSSI level of the new frequency is more than 1 dB lower than the RSSI level of the previously set frequency.

The receiver in the B3-band reciter covers the 148 to 174 MHz frequency band. This is split into two sub-bands: 148 to 159 MHz and 159 to 174 MHz. Each sub-band has its own helical filter (shown in Figure 5.3 below) which is electronically switched in or out of circuit depending on the frequency programmed into the reciter. The bandwidth of these helical filters is approximately ±1.5 MHz.

Figure 5.3 Identifying the B3-band receiver front end helical filters

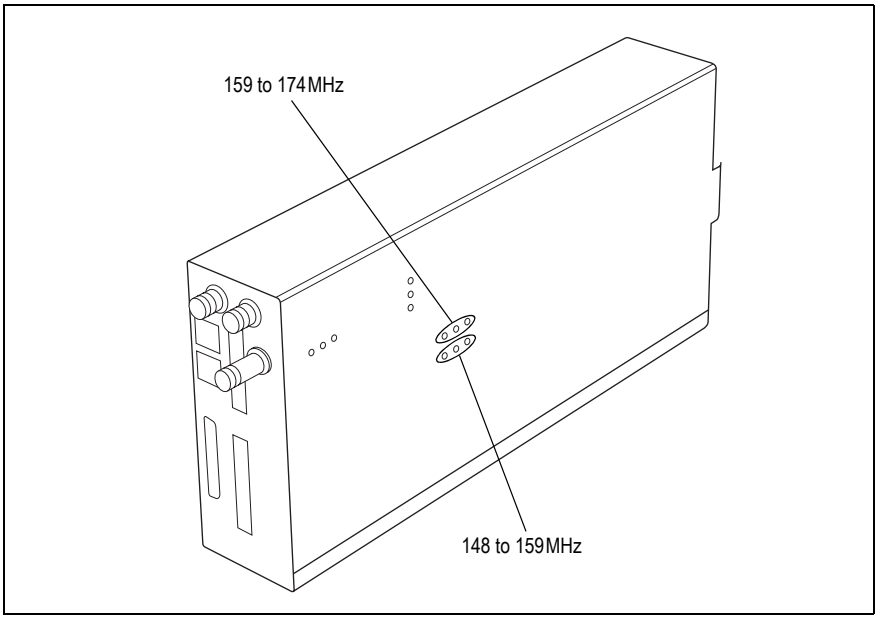

To check the RSSI level and tune the receiver front end (if required), follow these steps.

1. Remove the reciter from the subrack and reconnect the system control bus cable to power up the reciter.

2. Log in to the reciter and select Monitor > Interfaces > RF Interface. For information on connecting directly to the reciter, refer to "Connecting a Networked PC to a Base Station" on page 50.

3. Feed a signal at the currently tuned receive frequency and at a level of −80 dBm into the reciter's RF input. Check that the RSSI reading on the RF Interface page is −80 dBm ± 1 dB. Note this reading.

4. Set the reciter to the new receive frequency.

5. Change the RF input signal to the new receive frequency at −80 dBm. Check that the RSSI reading is −80 dBm ± 1 dB. If it is, the receiver front end does not require tuning. If it is not, go to the next step.

6. Using the Johanson tuning tool[1], adjust the correct helical filter for the new frequency (as shown in Figure 5.3) to obtain a peak RSSI reading. This reading should be within 1 dB of the reading at the previous frequency.

   Adjust the center resonator of the filter first, followed by the two outer resonators (in any order). Each resonator should require approximately the same amount of adjustment when tuning.

ⓘ A change in frequency of 5 MHz requires approximately one turn of the tuning slug. If tuning to a lower frequency, adjust the slug in (clockwise); for a higher frequency, adjust the slug out (counterclockwise).

7. Change the RF input signal and the reciter's receive frequency to 0.5 MHz above and below the required frequency and check that the RSSI reading does not drop by more than 0.5 dB from the reading at the required frequency.

8. Recalibrate the RSSI at the new frequency (Calibrate > Reciter > RSSI).

ⓘ If you wish to confirm the accuracy of the tuning procedure, carry out a sensitivity measurement at the new frequency.

1. Included in the TBA0ST2 tool kit. Also available separately as part number 937-00013-00.

© Tait Limited December 2013 (Draft)

H-Band Reciter

Before the base station is installed on site, you may need to tune the receiver front end. The receiver front end requires tuning if the receive frequency is shifted more than 5 MHz away from the previously set frequency, or the RSSI level of the new frequency is more than 1 dB lower than the RSSI level of the previously set frequency.

The receiver in the H-band reciter covers one of the following frequency sub-bands, depending on the model:

- H1 - 400 to 440 MHz
- H2 - 440 to 480 MHz.

Both sub-bands use the same helical filter (shown in Figure 5.4 below). The bandwidth of the helical filter is approximately ±5 MHz.

Figure 5.4 Identifying the H-band receiver front end helical filter

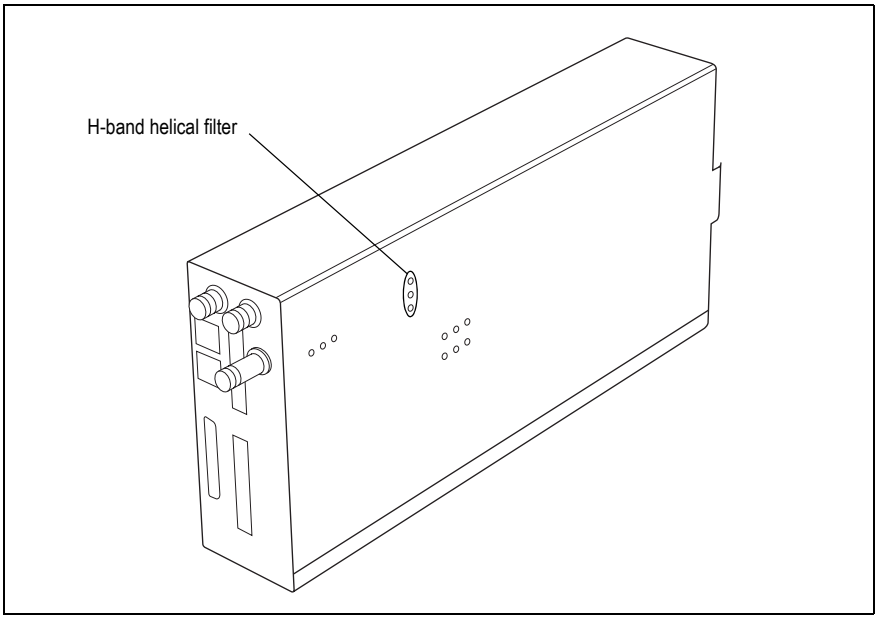

To check the RSSI level and tune the receiver front end (if required), follow these steps.

1. Remove the reciter from the subrack and reconnect the system control bus cable to power up the reciter.

2. Log in to the reciter and select Monitor > Interfaces > RF Interface. For information on connecting directly to the reciter, refer to "Connecting a Networked PC to a Base Station" on page 50.

3. Feed a signal at the currently tuned receive frequency and at a level of −80 dBm into the reciter's RF input. Check that the RSSI reading on the RF Interface page is −80 dBm ± 1 dB. Note this reading.

4. Set the reciter to the new receive frequency.

5. Change the RF input signal to the new receive frequency at −80 dBm. Check that the RSSI reading is −80 dBm ± 1 dB. If it is, the receiver front end does not require tuning. If it is not, go to the next step.

6. Using the Johanson tuning tool[1], adjust the helical filter for the new frequency (as shown in Figure 5.4) to obtain a peak RSSI reading. This reading should be within 1 dB of the reading at the previous frequency.

   Adjust the center resonator of the filter first, followed by the two outer resonators (in any order). Each resonator should require approximately the same amount of adjustment when tuning.

ⓘ If tuning to a lower frequency, adjust the slug in (clockwise); for a higher frequency, adjust the slug out (counterclockwise).

7. Change the RF input signal and the reciter's receive frequency to 2 MHz above and below the required frequency and check that the RSSI reading does not drop by more than 0.5 dB from the reading at the required frequency.

8. Recalibrate the RSSI at the new frequency (Calibrate > Reciter > RSSI).

ⓘ If you wish to confirm the accuracy of the tuning procedure, carry out a sensitivity measurement at the new frequency.

K-Band Reciter

The K-band reciter does not require tuning.

1. Included in the TBA0ST2 tool kit. Also available separately as part number 937-00013-00.

© Tait Limited December 2013 (Draft)

5.5 Installing the Base Station on Site

5.5.1 Base Stations for Trunked Systems

When installing base stations that are part of a trunked system, it is very important to observe good site engineering rules. This is especially true when the channels are combined into a single antenna.

If at all possible, the RF planner should avoid frequency plans in which the Rx to Tx spacing is an exact multiple of the trunked channel spacing, thus forcing Tx intermodulation products to fall outside the Rx channels.

Cables and antennas should be of high quality construction. Solid shield heliax type cables are best, but if braided shield cables must be used for short distances, their braids must be silver-plated.

When the outputs of more than one transmitter are combined, their voltages add, and the resulting peak envelope power is not simply the sum of their powers, but is equal to the power of one of them multiplied by the square of the number of sources. Cables, components, and hardware must be rated to withstand the peak envelope power.

During the commissioning process, all transmitters should be activated together using a diagnostic test tone, while the receiver RSSI is monitored. There should be no perceptible increase in RSSI while the transmitters are active.

5.5.2 Equipment Required

It is beyond the scope of this manual to list every piece of equipment that an installation technician should carry. However, the following tools are specifically required for installing the base station:

- Pozidriv PZ3 screwdriver for the M6 screws used in the DC input terminals on the PMU; M6 (0.25 in) screws are also used to secure the subrack to the cabinet in factory-assembled systems
- Pozidriv PZ2 screwdriver for the M4 screws used to secure the module retaining clamps, and for the fasteners used to secure the front panel to the subrack
- 8 mm AF spanner for the SMA connectors, and the subrack ground connector.

You can also obtain the TBA0ST2 tool kit from your regional Tait office. It contains the basic tools needed to install, tune, and service the base station.

© Tait Limited December 2013 (Draft)

5.5.3 Mounting the Subrack

Caution A subrack complete with modules can weigh up to 55 lb (25 kg), or up to 62 lb (28 kg) complete with packaging. We recommend that you have another person help you unpack and move the equipment. The TBAA03-16 carrying handles will make it easier to move the equipment once it has been unpacked. If necessary, remove the modules from the subrack before moving it (refer to "Replacing Modules" on page 99). In all cases follow safe lifting practices.

Figure 5.5 Subrack mounting points

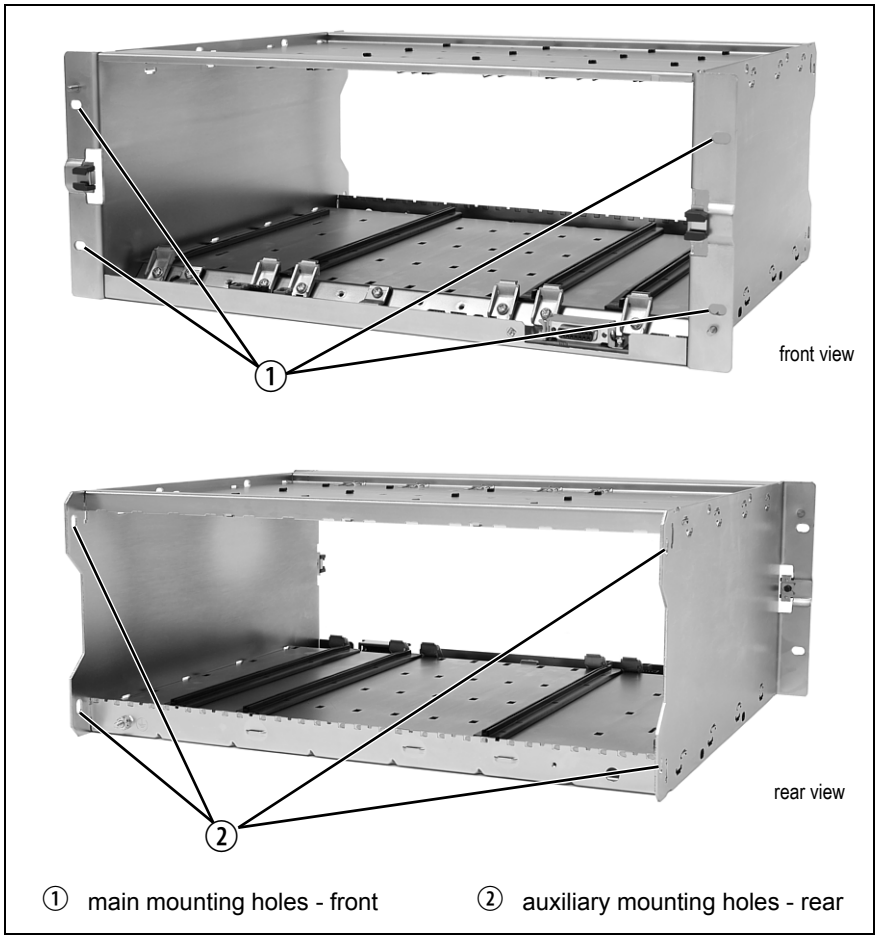

1. Remove the front panel, as described in "Preliminary Disassembly" on page 101.

2. Fit the subrack into the cabinet or rack and secure it firmly with an M6 (0.25 in) screw, flat and spring washer in each of the four main mounting holes ①, as shown in Figure 5.5.

If you need extra mounting security, additional mounting holes ② are provided at the rear of the subrack for auxiliary support brackets.

© Tait Limited December 2013 (Draft)

Figure 5.6 below gives the dimensions of the subrack and its mounting holes.

Figure 5.6 Subrack dimensions

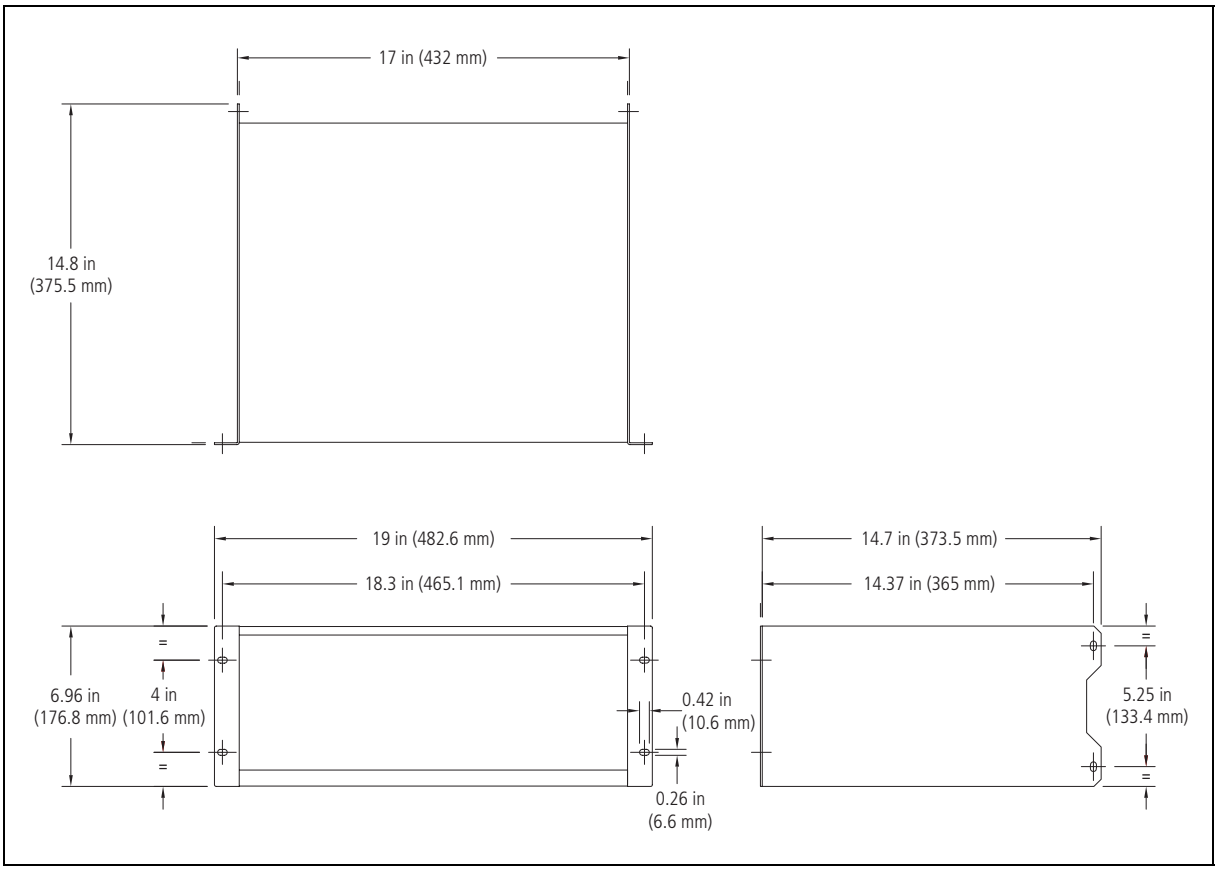

Auxiliary Support Bracket

TBAA03-13 auxiliary support brackets can be fitted to the rear of the subrack to provide additional mounting security. Figure 5.7 shows a standard TBAA03-13 bracket ① fitted in a typical Tait cabinet ②. If you are not using the Tait cabinet, you may have to make your own brackets to suit your installation.

Figure 5.7 Auxiliary support bracket

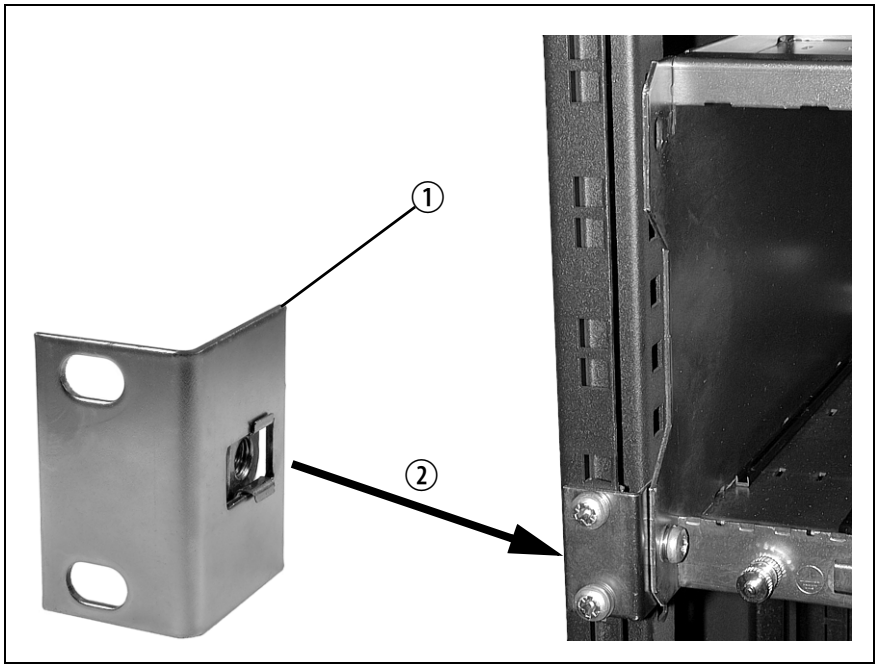

Notice You **must** fit the auxiliary support brackets if you intend to transport a cabinet fitted with a fully built-up base station.

We also recommend that you fit the brackets under the following conditions:

- when the installation is in an area prone to earthquakes
- when third party equipment is installed hard up underneath the base station subrack.

General Cabling

We recommend that you try to route all cables to and from the base station along the side of the cabinet so the cooling airflow is not restricted.

© Tait Limited December 2013 (Draft)

DC Power Cabling

DC power cables should be well supported so that the terminals on the PMU and on the ends of the cables do not have to support the full weight of the cables.

Figure 5.8 shows two recommended methods of securing these cables to prevent straining either set of terminals.

We recommend that you fit the supplied covers to the DC terminals to protect against accidental shorts.

Figure 5.8 DC power cabling

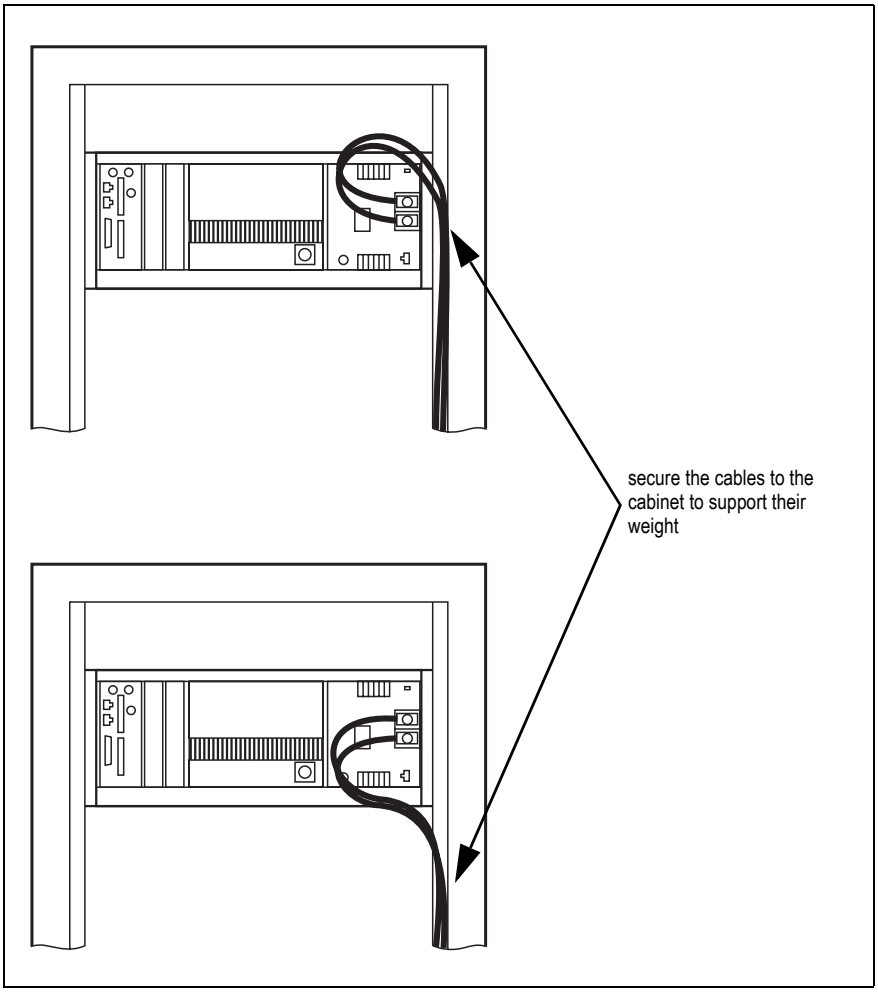

5.6 Connecting Up the Base Station

This section provides information relevant to the task of connecting up the various inputs and outputs of the base station.

5.6.1 Connection Overview

The connections at the rear of a 100 W base station are identified in Figure 5.9. External connections are all located at the rear of the subrack.

Figure 5.9 100 W base station inputs and outputs

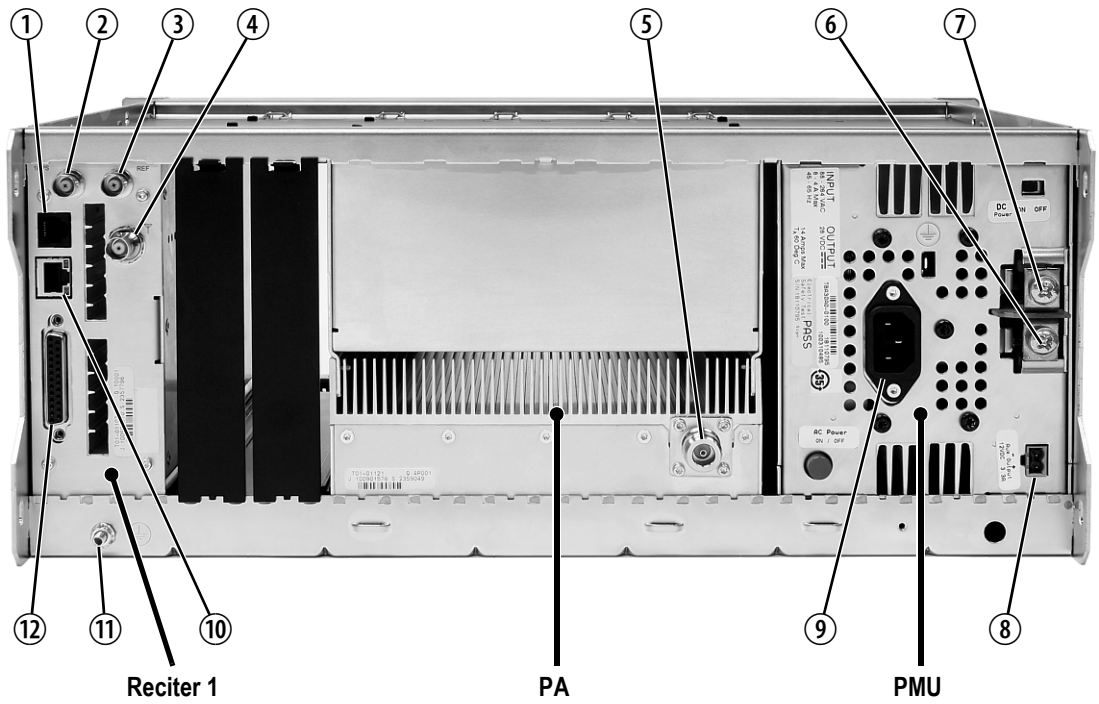

1. serial RS-232 connector[a]
2. 1 PPS input
3. external reference frequency input
4. RF input
5. RF output
6. –VDC input
7. +VDC input
8. auxiliary DC output
9. AC mains input
10. Ethernet interface connector
11. subrack ground connector
12. system interface connector

a. Factory use only.

© Tait Limited December 2013 (Draft)

5.6.2 Connecting AC Power

The PMU is designed to accept a mains input of 88 to 264 VAC at 45 to 65 Hz. A standard 3-wire grounded socket outlet must be used to supply the AC power. The socket outlet must be installed near the equipment and must be easily accessible. This outlet should be connected to an AC power supply capable of providing at least 600 W. The requirements of two typical AC supplies are given in the following table.

Nominal Supply	Current Requirement[a]	Circuit Breaker/Fuse Rating[a]
115 VAC	8 A	10 A
230 VAC	4 A	6 A

a. The actual current consumption of the base station will be lower than these requirements (refer to the Specifications Manual for more information).

Your base station should come supplied with a power supply cord to connect the male IEC connector on the PMU to the local AC supply. The pins of the IEC connector on the PMU are identified at right.

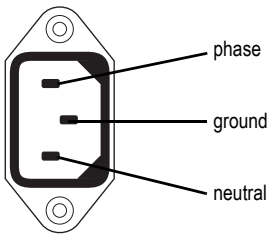

rear view

© Tait Limited December 2013 (Draft)

5.6.3 Connecting DC Power

The PMU is designed to accept a nominal 12 VDC, 24 VDC or 48 VDC input (depending on the model) with negative or positive ground. There is a minimum DC startup threshold to prevent damaging a battery which has little capacity left.

You must connect the DC supply from the battery to the PMU via a fuse or DC-rated circuit breaker with a contact separation of 3 mm, and with the appropriate rating, as shown in the table below. The DC input leads should be of a suitable gauge to ensure less than 0.2 V drop at maximum load over the required length of lead.

Nominal Supply Voltage	Input Voltage Range	Circuit Breaker/ Fuse Rating[a]	Recommended Wire Gauge[b]
12 VDC	10 VDC to 16.8 VDC	60 A	2 AWG / 35 mm^2
24 VDC	20 VDC to 33.6 VDC	30 A	5 AWG / 16 mm^2
48 VDC	40 VDC to 60 VDC	15 A	8 AWG / 8 mm^2

a. The actual current consumption of the base station will be lower than these requirements (refer to the Specifications Manual for more information).

b. For a length of 5 ft to 6.5 ft (1.5 m to 2 m) (typical).

Terminate and insulate the DC input leads to protect them from accidentally shorting to the subrack if the PMU is removed before the leads are disconnected. Protective covers for the DC terminals are supplied with each PMU.

Figure 5.10 Recommended DC power connection

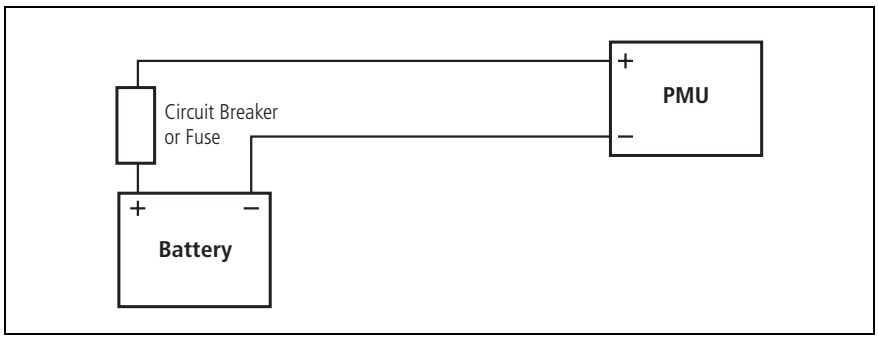

We recommend a screw torque of 18–20 lbf · in (2–2.25 N · m).

© Tait Limited December 2013 (Draft)

5.6.4 Connecting the Auxiliary DC Power Output

The PMU can provide an auxiliary DC output from the auxiliary power supply board. This board is available with an output of 13.65 VDC, 27.3 VDC, or 54.6 VDC (depending on the model), and is current limited to 3 A, 1.5 A or 750 mA respectively. This power supply is permanently on as soon as the base station has finished powering up, and is available on the auxiliary output connector on the rear panel.

You can connect multiple auxiliary power supply boards in parallel for redundancy purposes, or to provide an output greater than 40 W. Although no active current sharing is used, auxiliary boards connected in parallel will current-share before reaching their power limit. The failure (or switching off) of one auxiliary board will not load any other paralleled auxiliary boards in the circuit.

The auxiliary power supply turns off briefly when the PMU restarts after a firmware upgrade. This interruption may also cause any ancillary equipment powered from the auxiliary supply to restart. If this is a problem for your system, we recommend connecting auxiliary power supply boards in parallel to ensure an uninterrupted power supply for the ancillary equipment.

Auxiliary DC Power Output Cabling

Network elements are supplied with a connector, as shown in Figure 5.11. You can use this to connect the PMU's auxiliary DC power output to another device (refer to "PMU Auxiliary DC Output" on page 111 for the pin allocations).

Contact your regional Tait office for details on the full range of wiring kits available.

Figure 5.11 Auxiliary DC power connector

Phoenix MVSTBR2.5HC/2-ST/5.08 female

5.6.5 Connecting RF

Notice Do not remove the load from the PA while it is transmitting as this may damage the PA output stage. Before disconnecting any RF cables, put the base station into Offline mode to prevent any transmissions.

The RF input to the base station is via the marked BNC connector on the rear panel of the reciter. The RF output is via the N-type connector on the rear panel of the PA (refer to Figure 5.9 on page 86).

Cables and antennas should be of high quality construction. Solid shield heliax type cables are best, but if braided shield cables must be used for short distances, their braids must be silver-plated.

Recommendations for Installing the PA

We recommend the following installation procedures, which should protect the PA from damage under all but the most extreme operating conditions.

1. Do not connect the PA directly to the antenna. Fit an isolator or duplexer between the PA and the load. Fit the isolator as close as possible to the RF output connector on the PA. Do not connect any switching equipment between the isolator and the PA, unless the switch **cannot** operate while there is RF present (i.e. the base station is transmitting).
2. Fit a surge suppressor to the antenna cabling where it enters the building.
3. Inspect all cables and equipment connected to the base station for defects.

Ice on the antenna, or a broken antenna, is unlikely to cause damage to the PA.

Explanation

The circuit design of the PA protects the circuitry from high VSWR. This makes it difficult to damage the RF power device by keying the PA into a mismatched load, or if the load deteriorates over even a short period of time (milliseconds).

However, it is possible to damage the device if **all** the following conditions happen **at the same time**:

- there is a step change in the PA load (for example, the load is removed)
- the PA is transmitting
- the feed line loss between the PA and the mismatch is <1 dB.

The effect of such conditions is variable: some devices will not be destroyed, and some may fail after repeated load interruptions.

© Tait Limited December 2013 (Draft)

5.6.6 Connecting an External Frequency Reference

For K4 Band, the internal frequency reference accuracy is inadequate, and an external reference **must** be used. An external reference is also required for simulcast. The external reference frequency can be 10 MHz or 12.8 MHz, with an input level of 300 mV_{pp} to 5 V_{pp}. The stability of this reference should be better than 50 parts per billion (for non-simulcast) or ≤1 part per billion (for simulcast). The reciter automatically detects the frequency of the external reference and configures itself accordingly.

If an external reference is required, enable the external reference "Absent" alarm (Configure > Alarms > Control).

Use a 50 Ω coaxial cable (RG58 or RG223) to connect the external reference to the base station's external reference frequency input. You can daisy-chain up to eight base stations using F-junctions. The maximum overall cable length is 30 m. Terminate the last connection with a 50 Ω load.

Figure 5.12 Daisy-chaining an external frequency reference input

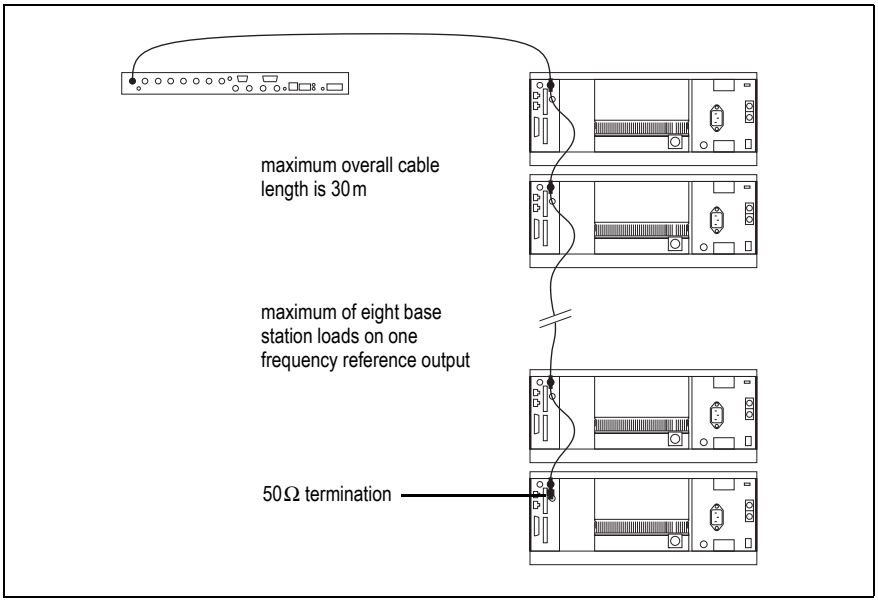

5.6.7 Connecting a 1 PPS Source

A 1 PPS signal is required for simulcast base stations. Use a 50 Ω coaxial cable (RG58 or RG223) to connect the source to the base station's 1 PPS input. You can daisy-chain up to eight base stations using F-junctions. We recommend that the cable length between the first and last load is kept to a minimum. This will reduce any propagation variation between base stations. The maximum overall cable length is 30 m. Terminate the last connection with a 50 Ω resistor, otherwise reflections of the 1 PPS pulse may occur.

A 1 PPS signal will be required for all base stations operating in a P25 Phase 2 system. If you intend to upgrade TB9400 base stations to P25 Phase 2 operation at a later date, we suggest that you provide the 1 PPS source, or at least the necessary cables, at the time of installation.

Figure 5.13 Daisy-chaining a 1 PPS input

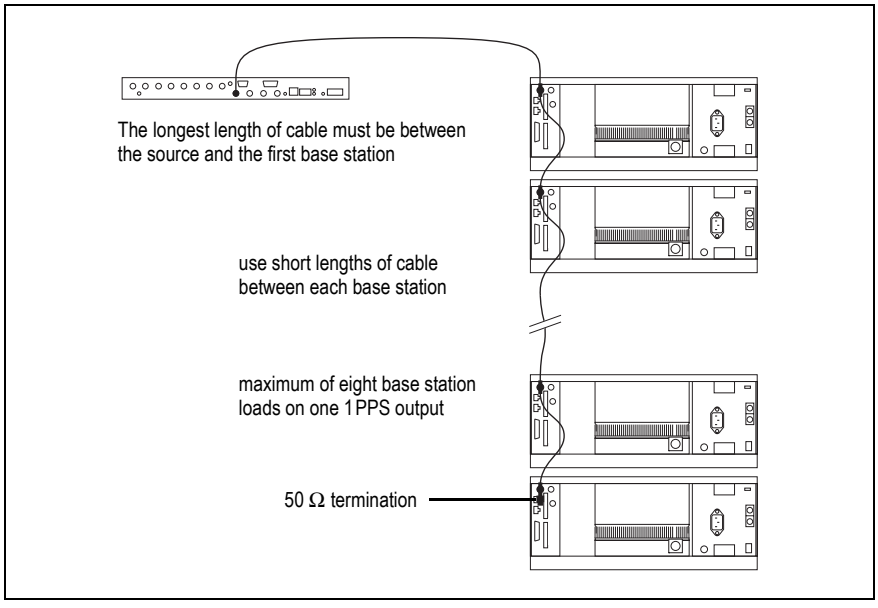

5.6.8 Ethernet Connection

The RJ-45 socket on the reciter's rear panel provides the 10BASE-T or 100BASE-T Ethernet connection to the other devices in the network. Use Cat-5 cable to connect this socket to the Tait P25 Network via a router or switch.

If necessary, refer to "Ethernet Connector" on page 111 for a list of Ethernet connection pin allocations.

© Tait Limited December 2013 (Draft)

5.6.9 Connecting General Purpose Inputs and Outputs

The base station has a number of general purpose inputs and outputs. These are connected via the 25-way D-range on the rear panel.

The pin allocations for the D-range connector are given in the following table. Not all pins are used in this release of the base station.

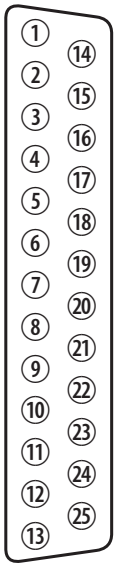

external view

Pin	Signal Name	Signal Type	Notes
1	not used		reserved for future use
2			
3			
4			
5			
6			
7			
8			
9			
10			
11	digital in 1	input	5V TTL logic active low
12	digital in 2		
13	+5.2VDC output	power output	maximum current 200mA
14	digital in 3	input	5V TTL logic active low
15	digital in 4		
16	digital in 5		
17	digital in 6		
18	digital in 7		
19	digital in 8		
20	digital in 9		
21	digital in 10		
22	digital in 11		
23	digital in 12		
24	not used		reserved for future use
25	ground	ground	

© Tait Limited December 2013 (Draft)

© Tait Limited December 2013 (Draft)

6 Maintenance

The base station is designed to be very reliable and should require little maintenance. However, performing regular checks will prolong the life of the equipment and prevent problems from happening.

It is beyond the scope of this manual to list every check that you should perform on your base station. The type and frequency of maintenance checks will depend on the location and type of your system. The checks and procedures listed below can be used as a starting point for your maintenance schedule.

Performance Checks

We suggest you monitor the following operational parameters using the web interface:

- VSWR
- DC input voltage, especially on transmit
- any temperature alarms.

These basic checks will provide an overview of how well your base station is operating.

Reciter

We recommend that you calibrate the reciter after three months of operation, and then annually for H-band reciters, or every three years for B3-band reciters. The calibration procedure is described in the Help (Calibrate > Reciter > Internal reference), and requires a calibrated frequency generator.

PA

There are no special maintenance requirements for the PA.

PMU

There are no special maintenance requirements for the PMU. However, we suggest that you periodically check that the screws on the DC input terminals are tightened to the recommended torque of 18–20 lbf · in (2–2.25 N · m). They may work loose with thermal cycling. Also, if you are using battery back-up, you should check the batteries regularly in accordance with the manufacturer's recommendations.

Ventilation

The base station has been designed to have a front-to-back cooling airflow. We strongly recommend that you periodically check and maintain the ventilation requirements described in "Equipment Ventilation" on page 66 to ensure a long life and trouble-free operation for your base station. Also check for a build-up of dust in and around the module heatsink fins, front panel air intakes, and fan ducts.

Cooling Fans

The cooling fans have a long service life and have no special maintenance requirements. You can use the web interface to configure the base station to generate an alarm if any of the front panel cooling fans fails. Refer to the Help for more details.

© Tait Limited December 2013 (Draft)

7 Troubleshooting

Check that all front and rear connectors and cables are in place, and that power switches are on. If problems persist, contact your regional Tait office.

Symptom	Possible Cause	Action
Alarm LED red and steady (not flashing)	The base station is in Offline mode	Use the web interface to put the base station in Online mode
Alarm LED flashing	One or more faults are present	Use the web interface to identify the faulty module
Alarm LED flashing, display shows “Please wait...”, fans are running slowly	Front panel has lost communication with reciter 1	Check cable connections. Check front panel D-range connector. Use the web interface to check reciter 1.
Power LED on front panel is on, but keypad does not work	Keypad is disabled	Check that the keypad is enabled in the web interface (Configure > Base Station > Miscellaneous)
Power LED flashing, fans are running, but display is blank	The base station is downloading firmware	Use the web interface to monitor the progress of the firmware download
No power or LEDs on front panel	System control bus not connected to front panel	Check cable connections
	Pins bent on 15-pin D-range plug on front panel	Replace or repair D-range plug
Desired feature is not operating	Feature license missing	Check that you have the necessary feature licenses (refer to “Licenses” on page 18 and the Help)
	Feature license present but feature is not enabled	Use the web interface to enable the feature
Tx stuck on	Tx and Rx frequencies are the same	Reconfigure Tx and Rx with different frequencies
The base station appears to make random transmissions	CWID feature enabled	No action: CWID transmissions are made according to configuration settings
PA has low power	Channel is configured to low power	Use the web interface to check the power settings
	PA may have suffered partial damage	Replace module and send faulty module for servicing

© Tait Limited December 2013 (Draft)

© Tait Limited December 2013 (Draft)

8 Replacing Modules

Caution The 100 W PA and PMU weigh between 9.3 lb (4.2 kg) and 15.4 lb (7 kg) each. Take care when handling these modules to avoid personal injury.

Notice The cooling fans are mounted on the front panel and will only operate when the panel is fitted correctly to the front of the subrack. To ensure adequate airflow through the base station, do not operate it for more than a few minutes with the front panel removed (e.g. for servicing purposes). Both the PMU and PA modules have built-in protection mechanisms to prevent damage from overheating.

© Tait Limited December 2013 (Draft)

8.1 Saving the Base Station's Configuration

Before replacing a module in the base station, you should decide whether you need to save its configuration data. If you are unsure whether you have a record of the configuration, backup and save the configuration file before removing any modules. Once you have replaced the module, you will be able to restore the original configuration to the base station.

If one or more of the modules is faulty, you may be unable to save the configuration. In this case, you will have to restore the configuration from a back-up file. Refer to the Help for more information.

© Tait Limited December 2013 (Draft)

8.2 Preliminary Disassembly

Hot-pluggable Modules

The reciter, PA and front panel are hot-pluggable and can be removed without powering down the whole base station. These modules can also be removed without disrupting the system control bus communications with the other modules in the subrack.

> **Notice** Before removing a PA, first disconnect the DC input, transmit forward input and transmit reverse output, followed by the RF output. After refitting the PA, reconnect the RF output first, followed by the transmit forward input, transmit reverse output, and then the DC input.

Disconnecting the Power

If you want to disconnect the power before working on the base station, follow these steps.

> **Caution** Before disconnecting the battery supply leads from the PMU, open the circuit breaker or disconnect the supply leads from the battery.

1. Turn off the AC ① and DC ② switches at the rear of the PMU.
2. Also at the rear of the PMU disconnect the mains ③ and battery ④ supply leads, and the auxiliary DC supply lead ⑤ (if fitted).

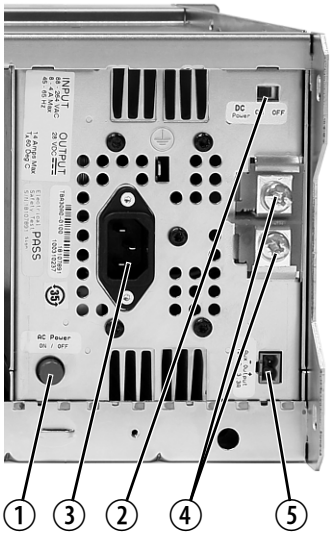

Remove the Front Panel

1. Using a Pozidriv PZ2 screwdriver, undo the fastener at each end of the front panel ① with a quarter turn counterclockwise.

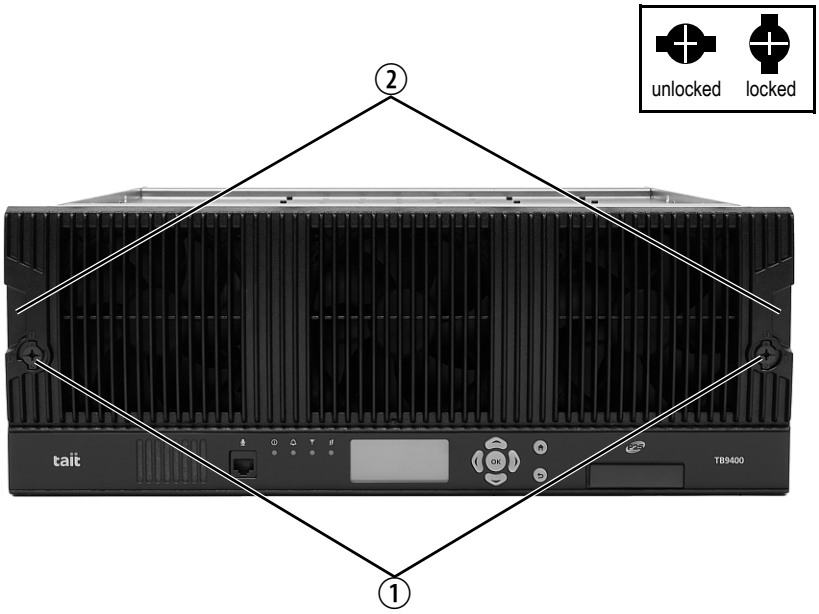

2. Place a finger in the recess ② provided at each end of the front panel and pull the front panel away from the subrack.

Cable Retaining Clips

The cable retaining clips are used to hold cables in position at the top of the subrack so that they do not interfere with the mounting of the front panel, or interrupt the airflow through the base station.

If you need to remove any front panel cables, simply pull the front of the cable retaining clip down and then slide it out from the subrack until it reaches the end of its travel.

© Tait Limited December 2013 (Draft)

8.3 Replacing a Reciter

Removal

1. If you have not already done so, carry out the instructions in "Preliminary Disassembly" on page 101.

2. At the rear of the reciter, unplug the RF input cable ①, any system cables ②, and the external reference ③ and 1 PPS ④ cables (if fitted).

3. At the front of the reciter, unplug the transmit reverse ⑤ and transmit forward ⑥ cables (if fitted), and move both cables to one side. Unplug both ends of the system control bus cable ⑦ and remove it.

4. Loosen the screw securing the retaining clamp ⑧ and rotate the clamp through 90° to clear the module.

5. Slide the reciter out of the subrack, taking care not to damage any of the cables.

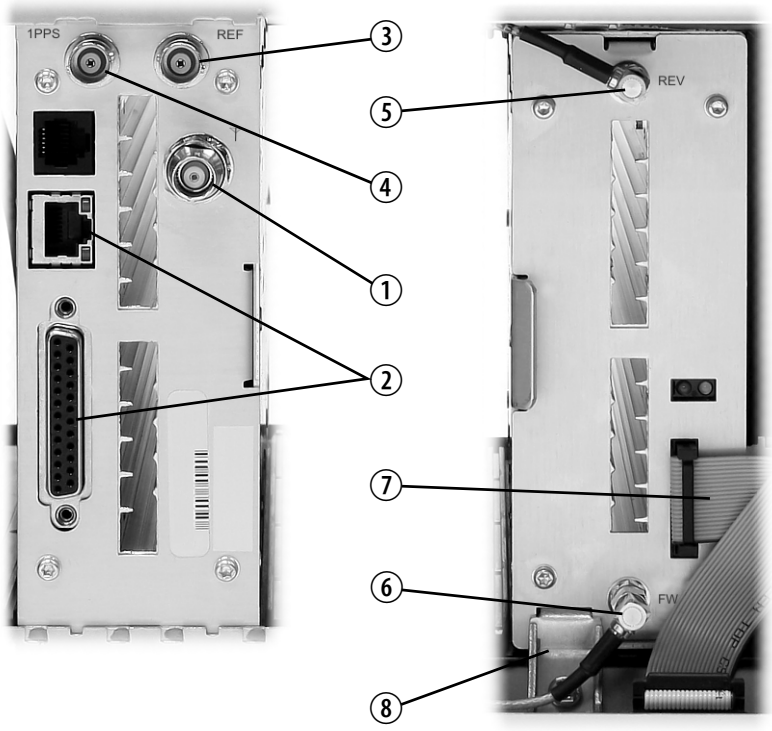

Refitting

1. Slide the replacement reciter into the subrack and secure it with the retaining clamp.
2. Reconnect all the front and rear panel cables previously disconnected. Ensure the front panel cables are positioned correctly, and retained where required by the cable retaining clips in the top of the subrack (refer to "Appendix B – Inter-Module Connections" on page 117).
3. Tighten the nut on the SMA connector to a torque of 5 lbf·in (0.6 N·m).
4. Carry out the instructions in "Final Reassembly" on page 110.

© Tait Limited December 2013 (Draft)

8.4 Replacing a Power Amplifier

Notice Before removing a PA, first disconnect the DC input, transmit forward input and transmit reverse output, followed by the RF output. After refitting the PA, reconnect the RF output first, followed by the transmit forward input, transmit reverse output, and then the DC input.

Removal

1. If you have not already done so, carry out the instructions in "Preliminary Disassembly" on page 101.
2. At the front of the PA, unplug the DC input ①, transmit forward ② and transmit reverse ③ cables, and move the cables to one side. Unplug both ends of the system control bus cable ④ and remove it.
3. At the rear of the PA, unplug the RF output cable.
4. Loosen the screw securing the retaining clamp(s) ⑤ and rotate the clamp(s) through 90° to clear the module.
5. Slide the PA out of the subrack, taking care not to damage any of the cables.

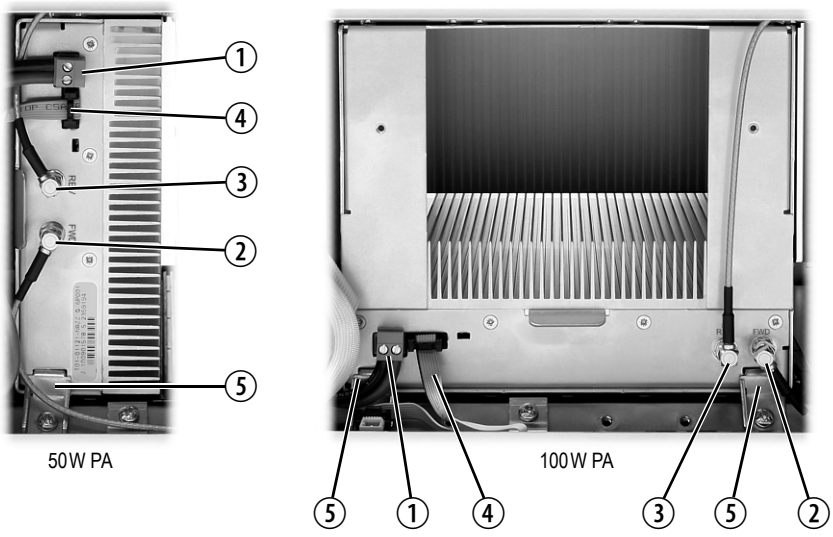

Refitting

1. Slide the replacement PA into the subrack and secure it with the retaining clamp(s).
2. At the rear of the PA, connect the RF output cable.
3. At the front of the PA, connect the transmit forward and transmit reverse cables, followed by the DC input cable.
4. Reconnect all the other front and rear panel cables previously disconnected. Ensure the front panel cables are positioned correctly, and retained where required by the cable retaining clips in the top of the subrack (refer to "Appendix B – Inter-Module Connections" on page 117).

5. Tighten the nut on the SMA connector to a torque of 5 lbf·in (0.6 N·m).

6. Carry out the instructions in “Final Reassembly” on page 110.

© Tait Limited December 2013 (Draft)

8.5 Replacing a Power Management Unit

Notice You must disconnect the AC and DC power cables before removing the PMU from the subrack.

Removal

1. If you have not already done so, carry out the instructions in "Preliminary Disassembly" on page 101.
2. At the front of the PMU, unplug and remove the output power cable ① to the subrack interconnect board. Also unplug and remove the system control bus cable ②.
3. Unplug the output power cable to the PA ③ and move it to one side.
4. Loosen the screws securing the retaining clamps ④ and rotate the clamps through 90° to clear the module.
5. Slide the PMU out of the subrack, taking care not to damage any of the cables.

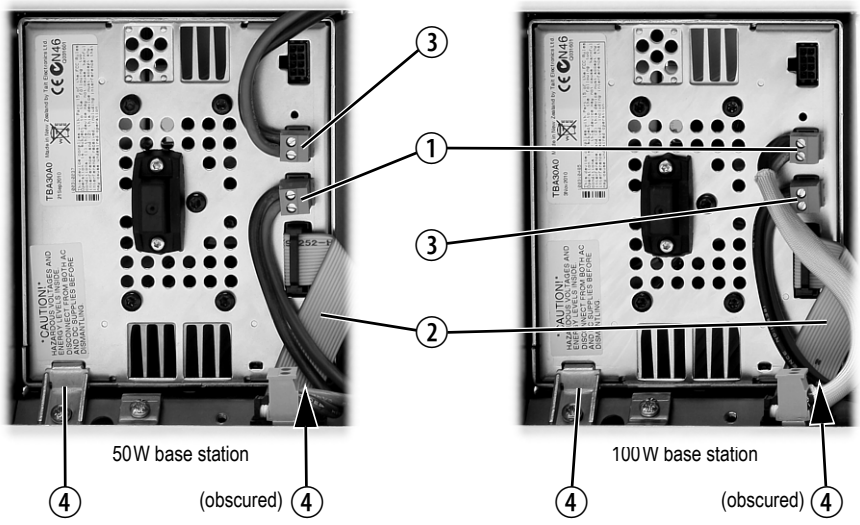

Refitting

1. Slide the replacement PMU into the subrack and secure it with the retaining clamps.
2. Reconnect all the front and rear panel cables previously disconnected. Connect the DC power cables on the rear panel as shown in Figure 5.8 on page 85. Tighten the screws to a torque of 18–20 lbf · in (2–2.25 N · m). Ensure the front panel cables are positioned correctly, and retained where required by the cable retaining clips in the top of the subrack (refer to "Appendix B – Inter-Module Connections" on page 117).
3. Carry out the instructions in "Final Reassembly" on page 110.

8.6 Replacing the Module Guide Rails

The module guide rails are held in place by four hooks that fit through the slots in the top and bottom of the subrack. There is also a locking tab which prevents the guide rails from working loose.

Notice Subracks produced from late 2008 onwards have wider slots than earlier subracks. Guide rails designed for these wider slots will not fit older subracks with narrow slots.

Removal

1. Bottom Guide Rails
   a. Insert a small flat-blade screwdriver under the front end of the guide rail and lift it slightly ①. This will ensure the small locking tab is clear of the slot in the subrack.
   b. While holding the front end of the guide rail up, pull the guide rail towards the front of the subrack ② and lift it clear of the slots.
2. Top Rails
   a. Insert a small flat-blade screwdriver under the rear end of the guide rail and lift it slightly ③. This will ensure the small locking tab is clear of the slot in the subrack.
   b. While holding the rear end of the guide rail up, pull the guide rail towards the rear of the subrack ④ and lift it clear of the slots.

bottom guide rail

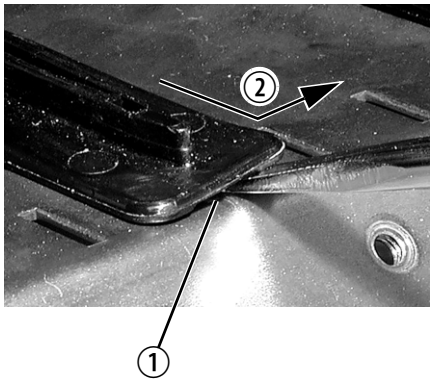

top guide rail

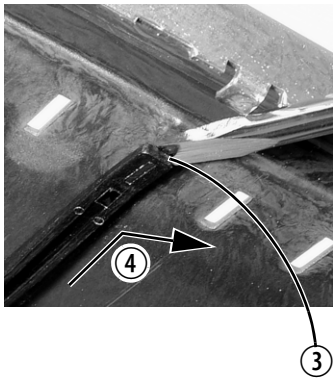

Refitting

1. Bottom Guide Rails
   a. With the locating hooks pointing towards the rear of the subrack, insert the hooks into the slots in the subrack.
   b. Push the guide rail towards the rear of the subrack until you hear the locking tab “click” into place.
2. Top Guide Rails
   a. With the locating hooks pointing towards the front of the subrack, insert the hooks into the slots in the subrack.
   b. Push the guide rail towards the front of the subrack until you hear the locking tab “click” into place.

© Tait Limited December 2013 (Draft)

8.7 Replacing the Subrack Interconnect Board

Removal

1. If you have not already done so, carry out the instructions in "Preliminary Disassembly" on page 101.
2. Disconnect any system control bus cables and DC power cables from the subrack board.
3. Remove the three M3 nuts and spring washers ① securing the right end of the board to the subrack.
4. Remove the D-range cover ②.
5. Remove the two retaining clamps ③ securing the left end and centre of the board.
6. Remove the board.

Refitting

1. If previously removed, replace the insulator ④.
2. Refit the board and D-range cover, and secure with the M3 nuts and spring washers. Replace the two retaining clamps.
3. Reconnect the system control bus cables and reciter DC cables as shown in "Appendix B – Inter-Module Connections" on page 117).

Figure 8.1 Replacing the subrack interconnect board

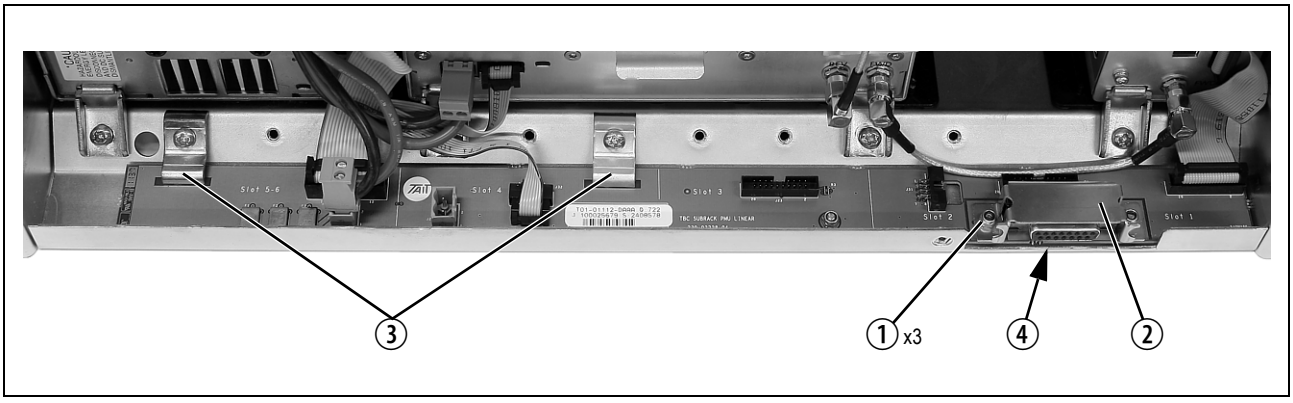

8.8 Final Reassembly

Notice You must fit the correct type of front panel to your base station. The different types of front panel and fan ducts are explained in "Appendix C – Identifying Front Panels" on page 117.

1. Before fitting the front panel, ensure that all cables are secured and positioned correctly so they are clear of the fan ducts (refer to "Appendix B – Inter-Module Connections" on page 117). Otherwise the panel may not fit properly, or you may damage the cables.

2. Refit the Front Panel
   a. Ensure that the fasteners ① are in the unlocked position.
   b. Fit the front panel onto the locating pegs on the subrack.
   c. Secure each fastener with a quarter turn clockwise.
   d. **Push the self-aligning D-range connector ② fully in.**

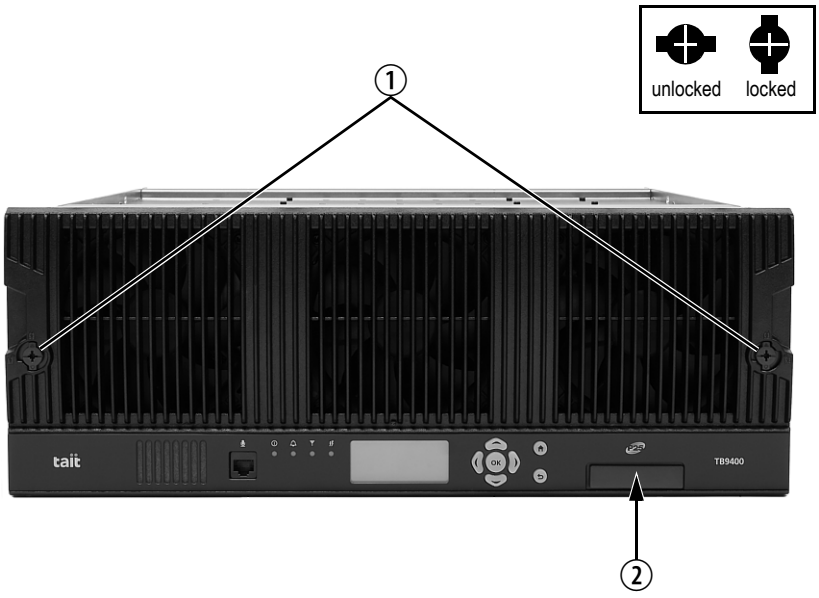

3. Before powering up the base station, check that all power, RF and system cables are connected correctly and securely at the rear of the base station.

Notice When refitting modules, make sure they are fitted correctly into the subrack and all retaining clamps are securely tightened. The recommended torque for the retaining clamp screws is 17 lbf·in (1.9 N·m). As well as holding the modules in place, the retaining clamps push the modules hard against the rear rail of the subrack to ensure a good ground connection between the modules and the subrack.

© Tait Limited December 2013 (Draft)

Appendix A – Interface Pin Allocations

System Interface Connector

For the pin allocations for the system interface D-range connector, see "Connecting General Purpose Inputs and Outputs" on page 93.

Ethernet Connector

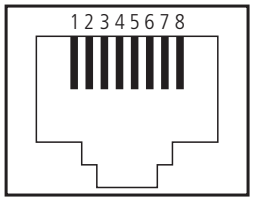

external view

Pin	Description
1	transmit data +
2	transmit data –
3	receive data +
4	not connected
5	not connected
6	receive data –
7	not connected
8	not connected

PMU Auxiliary DC Output

The pin allocations for the auxiliary DC output on the PMU are given in the following table.

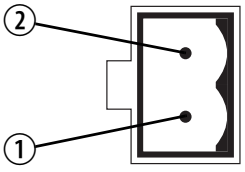

2-pin connector - external view

Pin	Description
1	+V output
2	–V output

© Tait Limited December 2013 (Draft)

Appendix B – Inter-Module Connections

Dual 50W Base Station

The connections between modules at the front of a dual 50W base station are shown below.

Dual 50W base station inter-module connections

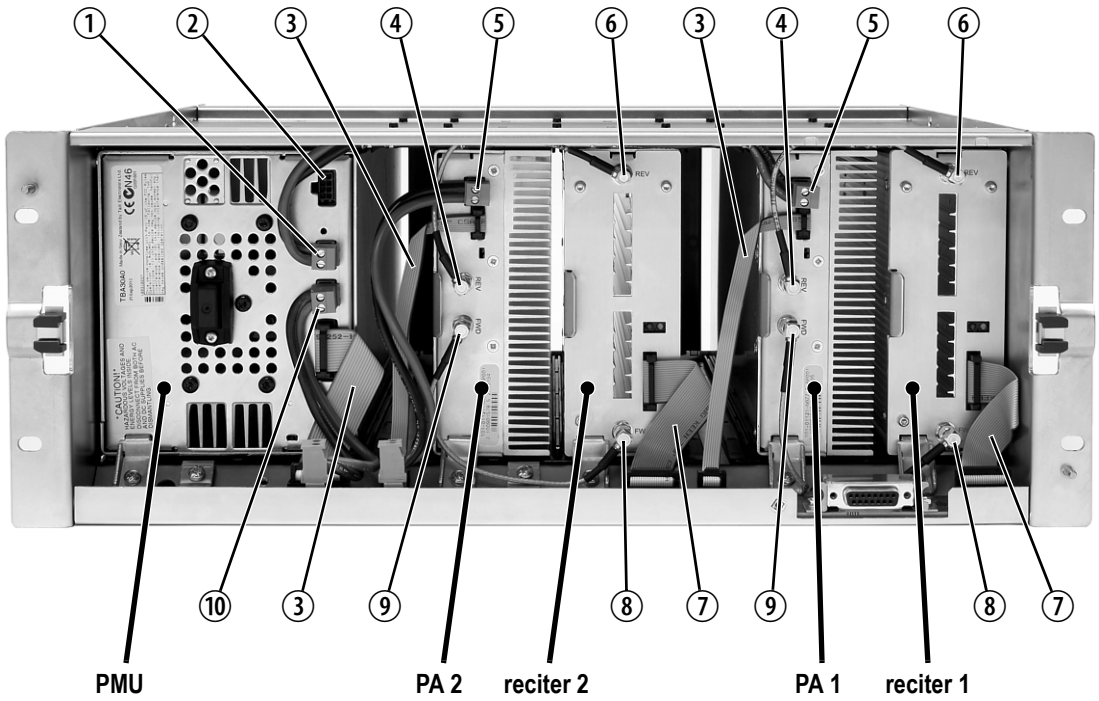

1. 28VDC output for PA 1
2. not used
3. system control bus
4. transmit reverse output
5. 28VDC input
6. transmit reverse input
7. system control bus and 28VDC input
8. transmit forward output
9. transmit forward input
10. 28VDC output to subrack interconnect board

DC Supply

PA 1 is powered by a direct connection from the PMU. The other modules in the subrack are powered from the PMU via the subrack interconnect board. The DC supply to the reciters is via the system control bus ribbon cable.

Single 50W Base Station

The connections between modules at the front of a single 50W base station are shown below.

Single 50W base station inter-module connections

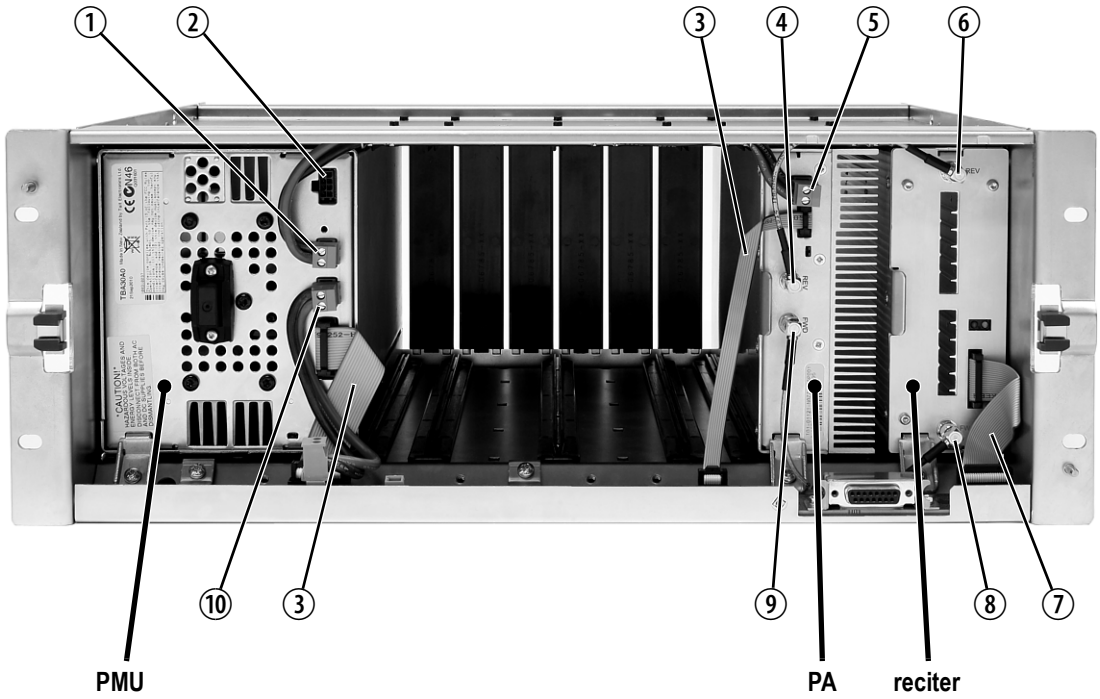

1. 28VDC output for PA
2. not used
3. system control bus
4. transmit reverse output
5. 28VDC input
6. transmit reverse input
7. system control bus and 28VDC input
8. transmit forward output
9. transmit forward input
10. 28VDC output to subrack interconnect board

DC Supply

The PA is powered by a direct connection from the PMU. The reciter is powered from the PMU via the subrack interconnect board and system control bus ribbon cable.

© Tait Limited December 2013 (Draft)

100W Base Station

The connections between modules at the front of a 100W base station are shown below.

100W base station inter-module connections

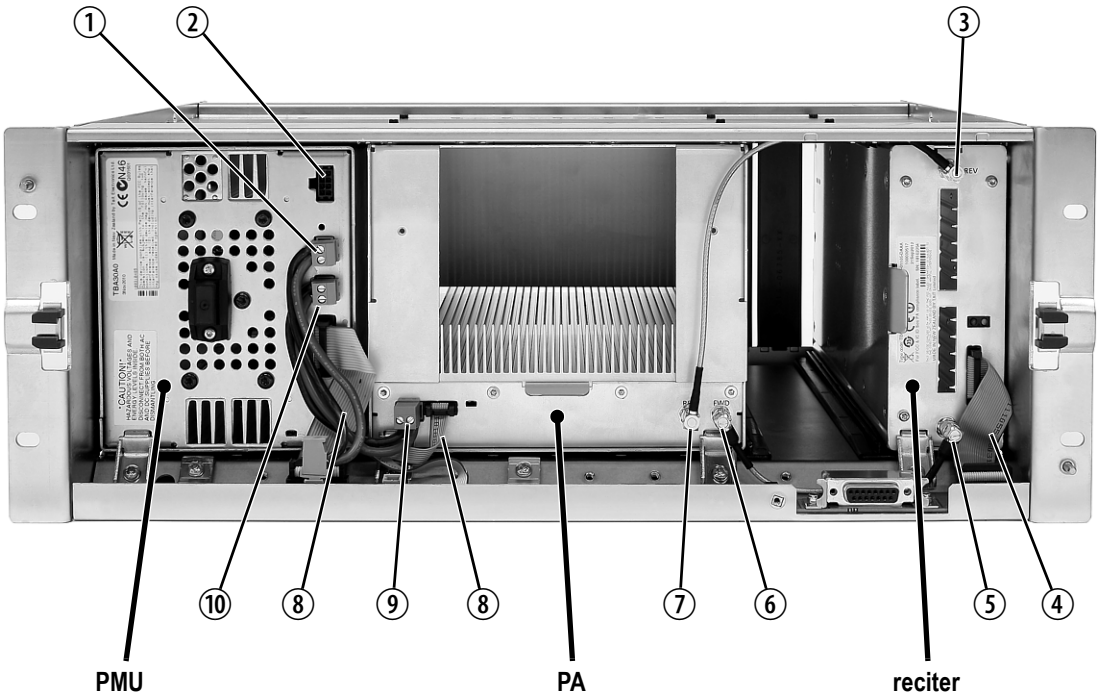

1	28VDC output to subrack interconnect board	6	transmit forward input
2	not used	7	transmit reverse output
3	transmit reverse input	8	system control bus
4	system control bus and 28VDC input	9	28VDC input
5	transmit forward output	10	28VDC output for PA

DC Supply

The PA is powered by a direct connection from the PMU. The reciter is powered from the PMU via the subrack interconnect board and system control bus ribbon cable.

© Tait Limited December 2013 (Draft)

Appendix C – Identifying Front Panels

You must fit the correct type of front panel to your base station. Each type of base station has a different combination of modules, and must use a front panel fitted with fan ducts that match those modules. Each module, or pair of modules, requires a specific type of fan duct to ensure the cooling air flow passes directly through the modules' heatsinks. The illustration below shows the different front panels and identifies each fan duct by its part number (the xx in the part number indicates the version of the part).

Identifying the different types of front panel

50 W base station (single and dual)

fan 1	fan 2	fan 3
reciter 1 and 50 W PA 1	reciter 2 and 50 W PA 2	PMU
duct: 304-10000-xx	duct: 304-10001-xx	duct: 302-05265-xx

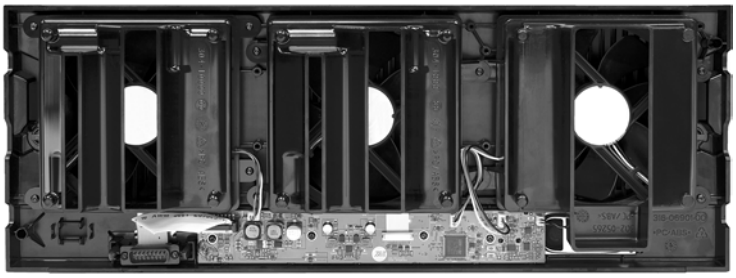

100 W base station

fan 1	fan 2	fan 3
reciter	100 W PA	PMU
duct: 302-05302-xx	duct: 302-05264-xx	duct: 302-05265-xx

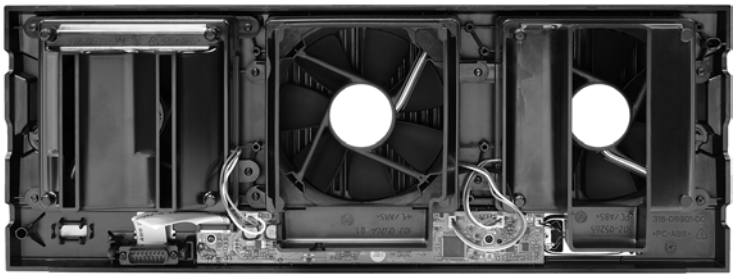

Receive-only base station

fan 1	fan 2	fan 3
reciter 1 and 2	reciter 3 and 4	PMU
duct: 302-05302-xx	duct: 302-05303-xx	duct: 302-05265-xx

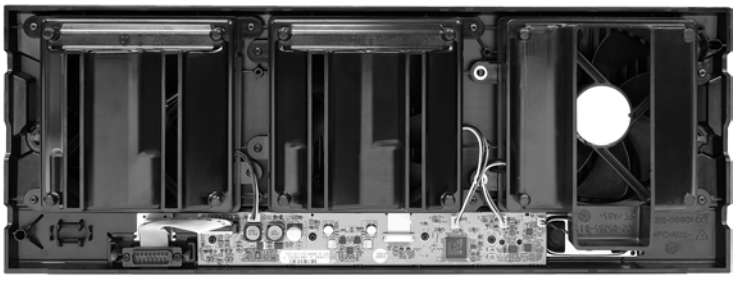

© Tait Limited December 2013 (Draft)

© Tait Limited December 2013 (Draft)

Glossary

This glossary contains an alphabetical list of terms and abbreviations related to the Tait P25 network and the TB9400 base station.

ADC Analog-to-Digital Converter. A device for converting an analog signal to a digital signal that represents the same information.

AMBE+2™ Advanced Multiband Excitation. A voice compression technology patented by Digital Voice Systems, Inc and used in the vocoders of P25 radios.

ANI Automatic Number Identification. A service that provides the receiver of a call with a numerical identifier or alphanumeric label of the caller.

APCO The Association of Public Safety Communications Officials in the United States. The APCO Project 25 standards committee defined the P25 digital radio standard. The standard is often referred to as APCO or P25.

ARP Address Resolution Protocol is an IP protocol used to map IP network addresses to the hardware addresses used by a data link protocol.

base station A radio receiver and transmitter that is located in a specific place (at a site) that enables a two-way radio to communicate with a dispatcher or over a larger range with other two-way radios. Specifically, Tait TB9400 equipment in a subrack.

battery protection mode A PMU enters battery protection mode when it has AC power but its DC power is below the configured power shutdown voltage. In battery protection mode, the PMU will shut down to protect the battery if it loses AC power.

bearer network Telecom equipment that is used to carry user data.

BER Bit Error Rate. A measure of the quality of digital transmission, expressed as a percentage. The BER indicates the proportion of errors to correctly received digits in a received signal.

C4FM Compatible Four-level Frequency Modulation. A modulation scheme defined in the P25 CAI standard for 12.5 kHz bandwidth.

CAI Common Air Interface. The over-the-air data formats and protocols defined by the APCO P25 committee.

© Tait Limited December 2013 (Draft)

call A complete exchange of information between two or more parties. A call requires a receive signal path and a transmit signal path. In conventional systems, a call is an over, but in trunked systems, a call may be a conversation, made up of a number of overs.

Cartesian Loop The reciter's RF output is fed to the PA through the transmit forward path. A coupled signal from the PA's RF output is fed back to the reciter through the transmit reverse path. The reciter uses this feedback through a Cartesian Loop to linearize the RF amplification system. Linearization is required to accurately transmit complex waveforms which vary in frequency and amplitude, such as those used in P25 Phase 2.

central voting Voting that is centralized at one member of the channel group.

channel 1. A path through which signals can flow.
2. In the RF domain, a frequency pair (or just a single frequency in a simplex system).
3. A set of configuration information that defines the frequency pair and other related settings (a channel configuration). "Channel" has this meaning in the web interface.

channel group A single logical channel consisting of a set of base stations. The members of a channel group are linked by an IP network and share a common multicast IP address.

channel profile A named group of configuration settings that help to define the properties of a channel. Each channel in the channel table must have a channel profile assigned to it.

channel spacing The bandwidth that a channel nominally occupies. If a base station has a channel spacing of 12.5 kHz, there must be a separation of at least 12.5 kHz between its operating frequencies and those of any other equipment.

channel table The base station's database of channel configurations.

CODEC A device which combines analog-to-digital conversion (coding) and digital-to-analog conversion (decoding).

community repeater Repeater that is shared by several user groups.

configuration file Consists of all the configuration settings needed for a base station, stored as a file.

conventional network Systems that do not have centralized management of channel access. System operation is entirely controlled by system end users.

© Tait Limited December 2013 (Draft)

CWID	Continuous Wave Identification is a method of automatically identifying the base station using a Morse code. Continuous wave means transmission of a signal with a single frequency that is either on or off, as opposed to a modulated carrier.
DAC	Digital-to-Analog Converter. A device for converting a digital signal to an analog signal that represents the same information.
DDC	Digital Down Converter. A device which converts the digitized IF signal of the receiver down to a lower frequency (complex baseband) to suit the DSP.
dispatcher	A person who gives official instructions by radio to one or more SU users.
dotted quad	A method for writing IPv4 addresses. The form is DDD.DDD.DDD.DDD where DDD is an 8-bit decimal number.
downlink	The transmission path from fixed equipment to SUs.
DSP	Digital Signal Processor.
duplex	Providing transmission and reception in both directions simultaneously.
duty cycle	Used in relation to the PA, it is the proportion of time (expressed as a percentage) during which the PA is transmitting.
EIA	Electronic Industries Alliance. Accredited by the American National Standards Institute (ANSI) and responsible for developing telecommunications and electronics standards in the USA.
EMC	Electromagnetic Compatibility. The ability of equipment to operate in its electromagnetic environment without creating interference with other devices.
ETSI	European Telecommunications Standards Institute. The non-profit organization responsible for producing European telecommunications standards.
failsoft mode	An optional operational mode of Tait P25 trunked networks. It comes into effect when the channel group loses all connection to the trunking site controller.
FCC	Federal Communications Commission. The FCC is an independent United States government agency that regulates interstate and international radio communications.

© Tait Limited December 2013 (Draft)

feature code The alphanumeric code used to identify a feature set.

feature set A function or mode of operation of the base station which can be enabled or disabled using the web interface. Each feature set requires a license to be purchased from Tait before it can be enabled.

feature license key The unique set of digits belonging to a license which is programmed into the base station to enable a feature set.

fill-in receiver An additional receiver placed within the coverage area of a base station to receive SU transmissions that are too weak to be received by that base station.

FLASH Electrically block-erasable and programmable read-only memory.

FM Frequency Modulation. Often used as an adjective to denote analog radio transmission.

frequency band The range of frequencies that the equipment is capable of operating on.

front panel The cover over the front of the base station containing the indicator LEDs, four-line LCD display, user controls and cooling fans.

gating The process of opening and closing the receiver gate. When a valid signal is received, the receiver gate opens, letting the signal through.

group call A call that is sent to more than one SU simultaneously.

heartbeat message A message whose purpose is to indicate to the receiver that the sender is operational.

hiccup mode Many power supplies switch off in the event of a short-circuit and try to start again after a short time (usually after a few seconds). This “hiccup”-type of switching off and on is repeated until the problem is eliminated.

holdover mode A simulcast base station can enter holdover mode when it loses its 1 PPS pulse. Holdover mode temporarily maintains synchronization by phase-locking the transmit clock to the external frequency reference.

hostname The unique name by which a network element is known on the network.

hub A unit for connecting hosts together. It sends all incoming Ethernet packets to all the other hosts.

© Tait Limited December 2013 (Draft)

hysteresis The difference between the upper and lower trigger points. For example, the receiver unmutes when the upper trigger point is reached, but will mute again until the level falls to the lower trigger point. An adequate hysteresis prevents the receiver gate from repeatedly muting and unmuting when the level varies around the trigger point.

I^2C A bi-directional two-wire serial bus which is used to connect integrated circuits (ICs). I^2C is a multi-master bus, which means that multiple chips can be connected to the same bus, and each one can act as a master by initiating a data transfer. Used in the TB9400 for communications between reciter 1 and the PMU.

impairment A measure of signal quality used in channel group voting. Impairment is inversely related to signal quality. The lowest impairment (0) indicates the highest signal quality. The highest impairment (15) indicates the worst signal quality.

inbound Describes the direction of a signal: from an SU over the air interface to the fixed station.

inhibit A control command that can be sent across the CAI to inhibit an SU. An inhibited SU appears to the user as if it is powered off.

IP Internet Protocol is a protocol for sending data packets between hosts.

isolator A passive two-port device which transmits power in one direction, and absorbs power in the other direction. It is used in a PA to prevent damage to the RF circuitry from high reverse power.

kernel The core executable of an operating system.

LAN Local Area Network. A computer network that interconnects computers in a limited area, such as a single building or group of buildings.

LDU Link Data Unit. Voice calls are sent over the CAI as a series of LDUs.

LED Light Emitting Diode. Also the screen representation of a physical LED.

license Some operational functions of the base station are controlled by licenses. Purchasing a license from Tait allows you to enable the feature set which includes the required functionality.

LSM Linear Simulcast Modulation is a proprietary modulation scheme designed to give optimal performance in simulcast systems, compared to that obtainable using C4FM.

© Tait Limited December 2013 (Draft)

marshalling duration The length of time that the voice stream needs to travel from the central voter to the furthest channel group member. The fixed marshalling duration parameter includes the time needed to fill the transmit buffer to the required level.

master The channel group master is the member with the control connection to the trunking site controller.

multicast group The group of hosts associated with a specific IP multicast address.

multicast IP address An IP address that refers to a group of hosts rather than a single host. These hosts will all accept packets with this IP address.

mute Prevents audio from being passed to the radio's speaker.

NAC Network Access Code. The 12 most significant bits of the network identifier information that precedes every packet sent on the CAI. The NAC identifies which network the data belongs to, allowing base stations and mobiles to ignore packets belonging to interfering networks.

NAT Network Address Translation allows the use of a single IP address for a whole network of computers. A NAT sits between the public Internet and the network it serves, and works by rewriting IP addresses and port numbers in IP headers on the fly so the packets all appear to be coming from (or going to) the single public IP address of the NAT device instead of the actual source or destination.

network element Any device that is network-connected. A Tait digital network consists of a number of network elements. The TB9400 base station is a network element designed and manufactured by Tait.

NTP Network Time Protocol is a protocol and software implementation for synchronizing the clocks of computer systems across a network. An NTP server obtains the correct time from a time source and sets the local time in each connected computer.

octet A set of 8 bits.

Offline mode A mode of operation in which active service is suspended so that special operations can be carried out, such as programming in a new configuration or carrying out invasive diagnostic tests.

Online mode The normal operating mode of the base station.

© Tait Limited December 2013 (Draft)

outbound	Describes the direction of a signal: from a fixed station over the air interface to an SU.
over	A single transmission, which begins when a user presses PTT and ends when the user stops pressing.
P25	Project 25. A suite of standards and requirements endorsed by the TIA and intended for digital public safety radio communications systems.
PA	The Power Amplifier is a base station module that boosts the exciter output to the required transmit level.
PCB	Printed Circuit Board.
PMU	The Power Management Unit is a module in the base station that provides power to the subrack and monitors power conditions.
preamble	A well-defined signal that is transmitted at the beginning of digital P25 calls to facilitate downlink voting and to allow the transmit buffer to fill.
privileges	A set of access rights to the web interface functions. There are Guest, Maintainer, and Administrator privileges.
Project 25	A project set up by APCO (the Association of Public Safety Communications Officials), together with other US governmental organizations, to develop standards for interoperable digital radios to meet the needs of public safety users.
PSTN	Public Switched Telephone Network: the public telephone network.
PTT	Push To Talk. The button on an SU that keys the transmitter.
QoS	Quality Of Service. A router feature that gives real-time data such as voice calls priority over other data.
receiver number	A unique number assigned to the members of a channel group.
reciter	A module of a base station that provides both receiver and exciter functionality.
repeater talkaround	Allows the SU user to bypass repeater operation and so communicate directly with other SUs. While repeater talkaround is active, all

© Tait Limited December 2013 (Draft)

transmissions are made on the receive frequency programmed for the channel.

RISC Reduced Instruction Set Computer. A type of microprocessor that recognizes a relatively limited number of instructions. The reciter's control board has a RISC microprocessor.

router A router is an internetwork packet switch that switches data packets from an input interface to an output interface. The interfaces can be of different types.

RS-232 A protocol for serial communications between a DTE (data terminal equipment) and a DCE (data communications equipment) device.

RS-485 An updated version of the RS-232 protocol for serial communications between multiple devices.

RSSI Received Signal Strength Indicator is a level that indicates the strength of the received signal.

RTP Real Time Protocol is an Internet protocol that supports the real-time transmission of voice and data.

Rx Receiver.

satellite voter A channel group member that has delegated voting activity to a central voter.

SAW filter Surface Acoustic Wave filter. A band pass filter that can be used to filter both RF and IF frequencies. A SAW filter uses the piezoelectric effect to turn the input signal into vibrations that are turned back into electrical signals in the desired frequency range.

selectivity The ability of a radio receiver to select the wanted signal and reject unwanted signals on adjacent channels (expressed as a ratio).

sensitivity The sensitivity of a radio receiver is the minimum input signal strength required to provide a usable signal.

signaling profile A named set of configuration items related to signaling that can be applied to any channel.

simplex Able to provide transmission and reception in only one direction at a time.

© Tait Limited December 2013 (Draft)

simulcast The simultaneous broadcast by more than one transmitter of the same signal on the same frequency.

SINAD Signal plus Noise and Distortion is a measure of signal quality. It is the ratio of (signal + noise + distortion) to (noise + distortion). A SINAD of 12 dB corresponds to a signal-to-noise ratio of 4:1.

site 1. The base station equipment at a particular location. This includes power supplies, transmitters, receivers, network interfaces and controllers.
2. The location of that equipment.

skew A measure used in centrally voted channel groups. If a voice stream arrives at the central voter 20 ms later than the first voice stream from the same SU, it is said to have a skew of 20 ms.

SMR Specialized Mobile Radio. A communications system used by police, ambulances, taxis, trucks and other delivery vehicles.

SNMP Simple Network Management Protocol. A protocol used (for example) by the trunking site controller to monitor the status of the channel group and its members.

SSRC Synchronization source. The SSRC is a large number specified by the trunking controller in its connection message. It uniquely identifies voice streams sent from the master base station.

SU Subscriber Unit. The term used in the APCO P25 standard documents for a two-way radio (generally a mobile or a portable radio) conforming to the CAI specifications.

supplementary service A term used in the P25 standards. It refers to a group of services that is additional to the basic service that a telecommunications network provides. Examples include encryption and SU monitoring.

syslog collector A program that can receive, display, and log syslog messages from many devices.

syslog protocol A standard protocol used for the transmission of event notification messages across IP networks. TB9400 base stations can send messages such as alarms to an IP address on the Tait P25 Network. The base station's logs store messages in the syslog format.

© Tait Limited December 2013 (Draft)

system control bus Provides the following physical paths in a TB9400 base station:

- I^2C and RS-485 communications between the modules in the subrack
- fan power from the PMU
- power connections for the reciter and front panel.

TaitNet Brand name for a PMR network designed and manufactured by Tait Limited.

Tait P25 network A set of Tait base stations interconnected by an IP network that can carry voice and data traffic.

TB9400 Base Station A P25-compliant base station consisting of the equipment necessary to receive and transmit on one channel. Generally, this means a reciter, a PA, and a PMU. Often abbreviated to TB9400 or base station.

TCCP Trunking Channel Control Protocol. A proprietary protocol operating over IP for the exchange of channel control messages between a base station and a trunking site controller.

TCP Transmission Control Protocol. A complex protocol on top of IP for sending reliable streams of data with flow control.

TELCO Telephone company.

TIA Telecommunications Industry Association

toggle Describes the switching between two states. If something is on, toggling it turns it off. If it is off, toggling it turns it on.

tone A sound wave of a particular frequency.

TSBK A Trunking Signaling Block is an over-the-air message format used in digital P25 mode for setting up trunked calls and for supplementary services such as messaging and status updates.

Tx Transmitter.

UDP User Datagram Protocol. A simple protocol on top of IP for sending streams of data.

uninhibit A control command that can be sent across the CAI to restore an inhibited SU to normal functioning.

© Tait Limited December 2013 (Draft)

uplink The transmission path from SUs to fixed equipment.

UTC Coordinated Universal Time (word order from French). An international time standard that has replaced Greenwich Mean Time.

valid signal A signal that the receiver unmutes to. A signal is valid, for example, when it is strong enough to be decoded and when it has the specified NAC.

voice stream A digitized voice signal that passes through the main switch.

VoIP Voice over IP. The name for the technology that puts speech signals in packets and then routes them over an IP backbone network.

voting The systematic sampling of a group of channels for the channel with the greatest signal strength. Voting provides wide-area coverage and ensures that as the user moves throughout the coverage area the strongest channel is always available for a call.

VPN Virtual Private Network. A private communications network used to communicate confidentially over a non-private network.

VSWR Voltage Standing Wave Ratio is the ratio of the maximum peak voltage anywhere on the transmission line to the minimum value anywhere on the transmission line. A perfectly matched line has a VSWR of 1:1. A high ratio indicates that the antenna subsystem is poorly matched.

watchdog A circuit that checks that the system is still responding. If the system does not respond (because the firmware has locked up), the circuit generally resets the system.

© Tait Limited December 2013 (Draft)

© Tait Limited December 2013 (Draft)

Tait Software License Agreement

This Software License Agreement ("Agreement") is between you (“Licensee”) and Tait Limited (“Tait").

By using any of the Software items embedded and pre-loaded in the related Tait Designated Product, included on CD, downloaded from the Tait website, or provided in any other form, you agree to be bound by the terms of this Agreement. If you do not agree to the terms of this Agreement, do not install or use any of the Software. If you install or use any of the Software, that will be deemed to be acceptance of the terms of this Agreement.

For good and valuable consideration, the parties agree as follows:

Section 1 DEFINITIONS

“Confidential Information” means all or any information supplied to or received by Licensee from Tait, whether before or after installation or use and whether directly or indirectly pertaining to the Software and Documentation supplied by Tait, including without limitation all information relating to the Designated Products, hardware, software; copyright, design registrations, trademarks; operations, processes, and related business affairs of Tait; and including any other goods or property supplied by Tait to Licensee pursuant to the terms of this Agreement.

“Designated Products” means products provided by Tait to Licensee with which or for which the Software and Documentation is licensed for use.

“Documentation” means product and software documentation that specifies technical and performance features and capabilities; user, operation, and training manuals for the Software; and all physical or electronic media upon which such information is provided.

“Executable Code” means Software in a form that can be run in a computer and typically refers to machine language, which is comprised of native instructions the computer carries out in hardware. Executable code may also refer to programs written in interpreted languages that require additional software to actually execute.

“Intellectual Property Rights” and **“Intellectual Property”** mean the following or their substantial equivalents or counterparts, recognized by or through action before any governmental authority in any jurisdiction throughout the world and including, but not limited to all rights in patents, patent applications, inventions, copyrights, trademarks, trade secrets, trade names, and other proprietary rights in or relating to the Software and Documentation; including any adaptations, corrections, de-compilations, disassemblies, emulations, enhancements fixes, modifications, translations and updates to or derivative works from, the Software or Documentation, whether made by Tait or another party, or any improvements that result from Tait processes or, provision of information services.

“Licensee” means any individual or entity that has accepted the terms of this License.

“Open Source Software” means software with freely obtainable source code and license for modification, or permission for free distribution.

“Open Source Software License” means the terms or conditions under which the Open Source Software is licensed.

“Person” means any individual, partnership, corporation, association, joint stock company, trust, joint venture, limited liability company, governmental authority, sole proprietorship, or other form of legal entity recognized by a governmental authority.

“Security Vulnerability” means any flaw or weakness in system security procedures, design, implementation, or internal controls that if exercised (accidentally triggered or intentionally exploited) could result in a security breach such that data is compromised, manipulated, or stolen, or a system is damaged.

“Software” (i) means proprietary software in executable code format, and adaptations, translations, de-compilations, disassemblies, emulations, or derivative works of such software; (ii) means any modifications, enhancements, new versions and new releases of the software provided by Tait; and (iii) may contain one or more items of software owned by a third-party supplier. The term "Software" does not include any third-party software provided under separate license or not licensable under the terms of this Agreement.

“Source Code” means software expressed in human readable language necessary for understanding, maintaining, modifying, correcting, and enhancing any software referred to in this Agreement and includes all states of that software prior to its compilation into an executable programme.

“Tait” means Tait Limited and includes its Affiliates.

Section 2 SCOPE

This Agreement contains the terms and conditions of the license Tait is providing to Licensee, and of Licensee’s use of the Software and Documentation. Tait and Licensee enter into this Agreement in connection with Tait delivery of certain proprietary Software and/or products containing embedded or pre-loaded proprietary Software.

Section 3 GRANT OF LICENSE

3.1. Subject to the provisions of this Agreement and the payment of applicable license fees, Tait grants to Licensee a personal, limited, non-transferable (except as permitted in Section 7), and non-exclusive license to use the Software in executable code form, and the Documentation,

© Tait Limited December 2013 (Draft)

solely in connection with Licensee's use of the Designated Products for the useful life of the Designated Products. This Agreement does not grant any rights to source code.

3.2. If the Software licensed under this Agreement contains or is derived from Open Source Software, the terms and conditions governing the use of such Open Source Software are in the Open Source Software Licenses of the copyright owner and not in this Agreement. If there is a conflict between the terms and conditions of this Agreement and the terms and conditions of the any applicable Open Source Software Licenses, the terms and conditions of the Open Source Software Licenses will take precedence. For information about Open Source Components contained in Tait products and the related Open Source licenses, see:
http://support.taitradio.com/go/opensource

Section 4 LIMITATIONS ON USE

4.1. Licensee may use the Software only for Licensee's internal business purposes and only in accordance with the Documentation. Any other use of the Software is strictly prohibited. Without limiting the general nature of these restrictions, Licensee will not make the Software available for use by third parties on a "time sharing," "application service provider," "service bureau" basis, or for any other similar commercial rental or sharing arrangement.

4.2. Licensee will not, and will not directly or indirectly allow or enable any third party to: (i) reverse engineer, disassemble, extract components, decompile, reprogram, or otherwise reduce the Software or any portion thereof to a human perceptible form or otherwise attempt to recreate the source code; (ii) modify, adapt, create derivative works of, or merge the Software; (iii) copy, reproduce, distribute, lend, or lease the Software or Documentation to any third party; (iv) grant any sublicense or other rights in the Software or Documentation to any third party; (v) take any action that would cause the Software or Documentation to be placed in the public domain; (vi) remove, or in any way alter or obscure any copyright notice or other notice of Tait or third-party licensor's proprietary rights; (vii) provide, copy, transmit, disclose, divulge or make the Software or Documentation available to, or permit the use of the Software by, any third party or on any machine except as expressly authorized by this Agreement; or (viii) use, or permit the use of, the Software in a manner that would result in the production of a copy of the Software by any means whatsoever other than what is permitted in this Agreement. Licensee may make one copy of the Software to be used solely for archival, back-up, or disaster recovery purposes; provided that Licensee may not operate that copy of the Software at the same time as the original Software is being operated. Licensee may make as many copies of the Documentation as it may reasonably require for the internal use of the Software.

4.3. Unless otherwise authorized by Tait in writing, Licensee will not, and will not enable or allow any third party to: (i) install a copy of the Software on more than one unit of a Designated Product; or (ii) copy or transfer Software installed on one unit of a Designated Product to any other device. Licensee may temporarily transfer Software installed on a Designated Product to another device if the Designated Product is inoperable or malfunctioning. Temporary transfer of the Software to another device must be discontinued when the original Designated Product is returned to operation and the Software must be removed from the other device.

4.4. Licensee will maintain, during the term of this Agreement and for a period of two years thereafter, accurate records relating to this license grant to verify compliance with this Agreement. Tait, or a third party nominated by Tait, may inspect Licensee's premises, books and records, upon reasonable prior notice to Licensee, during Licensee's normal business hours and subject to Licensee's facility and security regulations. Tait is responsible for the payment of all expenses and costs of the inspection, provided that Licensee shall indemnify Tait for all costs (including audit costs and legal costs on a solicitor client basis) if Licensee has breached the terms of this Agreement. Any information obtained by Tait during the course of the inspection will be kept in strict confidence by Tait and used solely for the purpose of verifying Licensee's compliance with the terms of this Agreement.

Section 5 OWNERSHIP AND TITLE

Tait, its licensors, and its suppliers retain all of their Intellectual Property Rights in and to the Software and Documentation, in any form. No rights are granted to Licensee under this Agreement by implication, estoppel or otherwise, except for those rights which are expressly granted to Licensee in this Agreement. All Intellectual Property developed, originated, or prepared by Tait in connection with providing the Software, Designated Products, Documentation, or related services, remains vested exclusively in Tait, and Licensee will not have any shared development or other Intellectual Property Rights.

Section 6 LIMITED WARRANTY; DISCLAIMER OF WARRANTY

6.1. The commencement date and the term of the Software warranty will be a period of one (1) year from Tait shipment of the Software. If Licensee is not in breach of any obligations under this Agreement, Tait warrants that the unmodified Software, when used properly and in accordance with the Documentation and this Agreement, will be free from a reproducible defect that eliminates the functionality or successful operation of a feature critical to the primary functionality or successful operation of the Software. Whether a defect has occurred will be determined solely by Tait. Tait does not warrant that Licensee's use of the Software or the Designated Products will be uninterrupted, error-free, completely free of Security Vulnerabilities, or that the Software or the Designated Products will meet Licensee's particular requirements. Tait makes

© Tait Limited December 2013 (Draft)

no representations or warranties with respect to any third-party software included in the Software.

6.2 Tait sole obligation to Licensee, and Licensee's exclusive remedy under this warranty, is to use reasonable efforts to remedy any material Software defect covered by this warranty. These efforts will involve either replacing the media or attempting to correct significant, demonstrable program or documentation errors or Security Vulnerabilities. If Tait cannot correct the defect within a reasonable time, then at Tait option, Tait will replace the defective Software with functionally equivalent Software, license to Licensee substitute Software which will accomplish the same objective, or terminate the license and refund Licensee's paid license fee. If Tait investigation of the perceived defect reveals that no such defect in fact exists, Tait may recover its costs in respect of such investigation from Licensee.

6.3. Tait disclaims any and all other warranties relating to the Software or Documentation other than the express warranties set forth in this Section 6. Warranties in Section 6 are in lieu of all other warranties whether express or implied, oral or written, and including without limitation any and all implied warranties of condition, title, non-infringement, merchantability, or fitness for a particular purpose or use by Licensee (whether Tait knows, has reason to know, has been advised of, or is otherwise aware of any such purpose or use), whether arising by law, by reason of custom or usage of trade, or by course of dealing. In addition, Tait disclaims any warranty to any person other than Licensee with respect to the Software or Documentation.

Section 7 TRANSFERS

7.1. Licensee will not transfer the Software or Documentation to any third party without specific prior written consent from Tait. Tait may withhold such consent or at its own discretion make the consent conditional upon the transferee paying applicable license fees and agreeing to be bound by this Agreement.

7.2. In the case of a value-added reseller or distributor of Tait Designated Products, the consent referred to in Section 7.1 may be contained in a Tait Reseller or Tait Distributor Agreement.

7.3. If the Designated Products are Tait vehicle-mounted mobile products or hand-carried portable radio products and Licensee transfers ownership of the Tait mobile or portable radio products to a third party, Licensee may assign its right to use the Software which is embedded in or furnished for use with the radio products and the related Documentation; provided that Licensee transfers all copies of the Software and Documentation to the transferee.

7.4. For the avoidance of any doubt, Section 7.3 excludes TaitNet Infrastructure, or the products listed at any time under network products at: http://www.taitradio.com.

7.5. If Licensee, as a contractor or subcontractor (integrator), is purchasing Tait Designated Products and licensing Software not for its own internal use but for end use only by a Customer, the Licensee may transfer such Software, but only if a) Licensee transfers all copies of such Software and the related Documentation to the transferee and b) Licensee has first obtained from its Customer (and, if Licensee is acting as a subcontractor, from the interim transferee(s) and from the ultimate end user sub license) an enforceable sublicense agreement that prohibits any other transfer and that contains restrictions substantially identical to the terms set forth in this Software License Agreement. Except as stated in the foregoing, Licensee and any transferee(s) authorised by this Section may not otherwise transfer or make available any Tait Software to any third party nor permit any party to do so. Licensee will, on request, make available evidence reasonably satisfactory to Tait demonstrating compliance with all the foregoing.

Section 8 TERM AND TERMINATION

8.1. Licensee's right to use the Software and Documentation will commence when the Designated Products are supplied by Tait to Licensee and will continue for the life of the Designated Products with which or for which the Software and Documentation are supplied, unless Licensee breaches this Agreement, in which case this Agreement and Licensee's right to use the Software and Documentation may be terminated immediately upon notice by Tait.

8.2. Within thirty (30) days after termination of this Agreement, Licensee must certify in writing to Tait that all copies of the Software have been removed or deleted from the Designated Products and that all copies of the Software and Documentation have been returned to Tait or destroyed by Licensee and are no longer in use by Licensee.

8.3. Licensee acknowledges that Tait made a considerable investment of resources in the development, marketing, and distribution of the Software and Documentation and that Licensee's breach of this Agreement will result in irreparable harm to Tait for which monetary damages would be inadequate. If Licensee breaches this Agreement, Tait may terminate this Agreement and be entitled to all available remedies at law or in equity including immediate injunctive relief and repossession of all non-embedded Software and associated Documentation. Licensee shall pay all Tait costs (on an indemnity basis) for the enforcement of the terms of this Agreement.

Section 9 CONFIDENTIALITY

Licensee acknowledges that the Software and Documentation contain proprietary and Confidential Information valuable to Tait and are Tait trade secrets, and Licensee agrees to respect the confidentiality of the information contained in the Software and Documentation.

Section 10 LIMITATION OF LIABILITY

10.1. In no circumstances shall Tait be under any liability to Licensee, or any other person whatsoever, whether in Tort (including negligence), Contract (except as expressly provided in this Agreement), Equity, under any Statute, or otherwise at law for any losses or damages whether general, special, exemplary, punitive, direct,

© Tait Limited December 2013 (Draft)

indirect, or consequential arising out of or in connection with any use or inability of using the Software.

10.2. Licensee's sole remedy against Tait will be limited to breach of contract and Tait sole and total liability for any such claim shall be limited at the option of Tait to the repair or replacement of the Software or the refund of the purchase price of the Software.

Section 11 GENERAL

11.1. COPYRIGHT NOTICES. The existence of a copyright notice on the Software will not be construed as an admission or presumption of publication of the Software or public disclosure of any trade secrets associated with the Software.

11.2. COMPLIANCE WITH LAWS. Licensee acknowledges that the Software may be subject to the laws and regulations of the jurisdiction covering the supply of the Designated Products and will comply with all applicable laws and regulations, including export laws and regulations, of that country.

11.3. ASSIGNMENTS AND SUBCONTRACTING. Tait may assign its rights or subcontract its obligations under this Agreement, or encumber or sell its rights in any Software, without prior notice to, or consent of, Licensee.

11.4. GOVERNING LAW. This Agreement shall be subject to and construed in accordance with New Zealand law and disputes between the parties concerning the provisions hereof shall be determined by the New Zealand Courts of Law. Provided however Tait may at its election bring proceedings for breach of the terms hereof or for the enforcement of any judgment in relation to a breach of the terms hereof in any jurisdiction Tait considers fit for the purpose of ensuring compliance with the terms hereof or obtaining relief for breach of the terms hereof.

11.5. THIRD-PARTY BENEFICIARIES. This Agreement is entered into solely for the benefit of Tait and Licensee. No third party has the right to make any claim or assert any right under this Agreement, and no third party is deemed a beneficiary of this Agreement. Notwithstanding the foregoing, any licensor or supplier of third-party software included in the Software will be a direct and intended third-party beneficiary of this Agreement.

11.6. SURVIVAL. Sections 4, 5, 6.3, 7, 8, 9, 10, and 11 survive the termination of this Agreement.

11.7. ORDER OF PRECEDENCE. In the event of inconsistencies between this Agreement and any other Agreement between the parties, the parties agree that, with respect to the specific subject matter of this Agreement, this Agreement prevails.

11.8. SECURITY. Tait uses reasonable means in the design and writing of its own Software and the acquisition of third-party Software in order to limit Security Vulnerabilities. While no software can be guaranteed to be free from Security Vulnerabilities, if a Security Vulnerability is discovered, Tait will take the steps specified in Section 6 of this Agreement.

11.9. EXPORT. Licensee will not transfer, directly or indirectly, any Designated Product, Documentation or Software furnished hereunder or the direct product of such Documentation or Software to any country for which New Zealand or any other applicable country requires an export license or other governmental approval without first obtaining such license or approval.

11.10. SEVERABILITY. In the event that any part or parts of this Agreement shall be held illegal or null and void by any court or administrative body of competent jurisdiction, such determination shall not affect the remaining terms which shall remain in full force and effect as if such part or parts held to be illegal or void had not been included in this Agreement. Tait may replace the invalid or unenforceable provision with a valid and enforceable provision that achieves the original intent and economic effect of this Agreement.

11.11. CONSUMER GUARANTEES. Licensee acknowledges that the licenses supplied in terms of this agreement are supplied to Licensee in business, and that the guarantees and other provisions of prevailing consumer protection legislation shall not apply.

11.12. WHOLE AGREEMENT. Licensee acknowledges that it has read this Agreement, understands it and agrees to be bound by its terms and conditions. Licensee also agrees that, subject only to the express terms of any other agreement between Tait and Licensee to the contrary, this is the complete and exclusive statement of the Agreement between it and Tait in relation to the Software. This Agreement supersedes any proposal or prior agreement, oral or written, and any other communications between Licensee and Tait relating to the Software and the Designated Products.

© Tait Limited December 2013 (Draft)

Graphics - Do Not Print

N:/Tel_ill/47515000/4986z_01.eps 1
N:/Tel_ill/37013850/3831z_01.eps 2
N:/Tel_ill/47515000/4995z_01.eps 7
N:/Tel_ill/47515000/4951z_02.eps 7
N:/Tel_ill/47515000/4951z_02.eps 7
N:/Tel_ill/47515000/4995z_01.eps 7
N:/Tel_ill/47515000/4762z_01.tif @ 200 dpi 9
N:/Tel_ill/47515000/4995z_01.eps 11
N:/Tel_ill/47515000/4870z_01.tif @ 300 dpi 11
N:/Tel_ill/47515000/4872z_01.tif @ 300 dpi 12
N:/Tel_ill/47515000/4871z_01.tif @ 300 dpi 12
N:/Tel_ill/31513300/3183z_03.tif @ 200 dpi 12
N:/Tel_ill/47515000/4762z_01.tif @ 200 dpi 13
N:/Tel_ill/47515000/4995z_01.eps 13
N:/Tel_ill/47515000/4760z_01.tif @ 200 dpi 13
N:/Tel_ill/47515000/4921z_01.eps 14
N:/Tel_ill/47515000/4922z_01.eps 15
N:/Tel_ill/47515000/4923z_01.eps 16
N:/Tel_ill/47515000/4751e_01.eps 19
N:/Tel_ill/47515000/4752e_01.eps 20
N:/Tel_ill/47515000/4755e_01.eps 21
N:/Tel_ill/47515000/4753e_01.eps 22
N:/Tel_ill/47515000/4754e_01.eps 24
N:/Tel_ill/37013850/3827e_01.eps 27
N:/Tel_ill/47515000/4951z_02.eps 30
N:/Tel_ill/47515000/4951z_02.eps 30
N:/Tel_ill/47515000/4951z_02.eps 31
N:/Tel_ill/001_150/0111Z_05.eps 32
N:/Tel_ill/47515000/4970z_01.tif @ 200 dpi 36
N:/Tel_ill/31513300/3195z_01.eps 36
N:/Tel_ill/31513300/3197z_01.eps 36
N:/Tel_ill/31513300/3194z_01.eps 37

© Tait LimitedDecember 2013 (Draft)

N:/Tel_ill/31513300/3196z_01.eps 37
N:/Tel_ill/47515000/4765z_01.eps 37
N:/Tel_ill/47515000/4765z_01.eps 37
N:/Tel_ill/47515000/4765z_01.eps 37
N:/Tel_ill/47515000/4765z_01.eps 37
N:/Tel_ill/47515000/4766z_01.eps 37
N:/Tel_ill/47515000/4767z_01.eps 37
N:/Tel_ill/47515000/4768z_01.eps 37
N:/Tel_ill/47515000/4995z_01.eps 37
N:/Tel_ill/47515000/4995z_01.eps 38
N:/Tel_ill/47515000/4770e_01.pdf 39
N:/Tel_ill/47515000/4870z_01.tif @ 200 dpi 40
N:/Tel_ill/47515000/4877z_01.tif @ 200 dpi 41
N:/Tel_ill/47515000/4871z_01.tif @ 200 dpi 42
N:/Tel_ill/47515000/4872z_01.tif @ 200 dpi 42
N:/Tel_ill/47515000/4995z_01.eps 42
N:/Tel_ill/31513300/3177z_04.tif @ 200 dpi 43
N:/Tel_ill/31513300/3265z_03.tif @ 200 dpi 43
N:/Tel_ill/47515000/4951z_02.eps 43
N:/Tel_ill/47515000/4995z_01.eps 43
N:/Tel_ill/47515000/4995z_01.eps 44
N:/Tel_ill/47515000/4995z_01.eps 46
N:/Tel_ill/50015150/5006z_01.tif @ 150 dpi 47
N:/Tel_ill/50015150/5007z_01.tif @ 150 dpi 53
N:/Tel_ill/50015150/5008z_01.tif @ 200 dpi 54
N:/Tel_ill/50015150/5009z_01.tif @ 200 dpi 55
N:/Tel_ill/50015150/5010z_01.tif @ 200 dpi 55
N:/Tel_ill/50015150/5011z_01.tif @ 200 dpi 55
N:/Tel_ill/50015150/5012z_01.tif @ 200 dpi 56
N:/Tel_ill/50015150/5013z_01.tif @ 200 dpi 57
N:/Tel_ill/50015150/5014z_01.tif @ 200 dpi 57
N:/Tel_ill/50015150/5015z_01.tif @ 200 dpi 58
N:/Tel_ill/47515000/4995z_01.eps 59
N:/Tel_ill/47515000/4995z_01.eps 61
N:/Tel_ill/47515000/4756z_01.eps 68

N:/Tel_ill/47515000/4951z_02.eps 69
N:/Tel_ill/31513300/3268z_02.eps 69
N:/Tel_ill/47515000/4995z_01.eps 71
N:/Tel_ill/50015150/5004z_01.eps 77
N:/Tel_ill/47515000/4995z_01.eps 78
N:/Tel_ill/47515000/4995z_01.eps 78
N:/Tel_ill/50015150/5004z_01.eps 79
N:/Tel_ill/47515000/4995z_01.eps 80
N:/Tel_ill/47515000/4995z_01.eps 80
N:/Tel_ill/47515000/4760z_01.tif @ 200 dpi 82
N:/Tel_ill/47515000/4761z_01.tif @ 200 dpi 82
N:/Tel_ill/47515000/4951z_02.eps 82
N:/Tel_ill/47515000/4995z_01.eps 82
N:/Tel_ill/43014450/4397z_01.eps 83
N:/Tel_ill/31513300/3201z_02.tif @ 200 dpi 84
N:/Tel_ill/31513300/3202z_02.tif @ 200 dpi 84
N:/Tel_ill/47515000/4757z_01.eps 85
N:/Tel_ill/47515000/4974z_01.tif @ 200 dpi 86
N:/Tel_ill/31513300/3169z_02.eps 87
N:/Tel_ill/31513300/3216e_03.eps 88
N:/Tel_ill/47515000/4995z_01.eps 89
N:/Tel_ill/34513700/3524z_02.eps 89
N:/Tel_ill/47515000/4975z_01.eps 91
N:/Tel_ill/47515000/4976z_01.eps 92
N:/Tel_ill/47515000/4995z_01.eps 92
N:/Tel_ill/31513300/3172z_01.eps 93
N:/Tel_ill/47515000/4951z_02.eps 99
N:/Tel_ill/47515000/4951z_02.eps 101
N:/Tel_ill/31513300/3271z_03.tif @ 200 dpi 101
N:/Tel_ill/47515000/4762z_01.tif @ 200 dpi 102
N:/Tel_ill/47515000/4914z_01.tif @ 200 dpi 102
N:/Tel_ill/47515000/4913z_01.tif @ 200 dpi 103
N:/Tel_ill/47515000/4912z_01.tif @ 200 dpi 103
N:/Tel_ill/47515000/4916z_01.tif @ 200 dpi 105
N:/Tel_ill/47515000/4915z_01.tif @ 200 dpi 105

© Tait LimitedDecember 2013 (Draft)

N:/Tel_ill/47515000/4918z_01.tif @ 200 dpi 107
N:/Tel_ill/47515000/4917z_01.tif @ 200 dpi 107
N:/Tel_ill/31513300/3215z_01.tif @ 200 dpi 108
N:/Tel_ill/31513300/3214z_01.tif @ 200 dpi 108
N:/Tel_ill/47515000/4911z_01.tif @ 200 dpi 109
N:/Tel_ill/47515000/4762z_01.tif @ 200 dpi 110
N:/Tel_ill/31513300/3178z_04.eps 111
N:/Tel_ill/34513700/3523z_01.eps 111
N:/Tel_ill/47515000/4875z_01.tif @ 200 dpi 113
N:/Tel_ill/47515000/4874z_01.tif @ 200 dpi 114
N:/Tel_ill/47515000/4876z_01.tif @ 200 dpi 115
N:/Tel_ill/51515300/5156z_01.tif @ 300 dpi 117
N:/Tel_ill/47515000/4919z_01.tif @ 300 dpi 117
N:/Tel_ill/47515000/4920z_01.tif @ 300 dpi 117