TB7300 Base Station

Installation and Operation Manual

MBD-00001-16 · Issue 16· April 2021

www.taitradio.com

Contact Information

Tait Communications
Corporate Head Office

Tait International Limited
P.O. Box 1645
Christchurch
New Zealand

For the address and telephone number of regional offices, refer to our website: www.taitradio.com

Copyright and Trademarks

All information contained in this document is the property of Tait International Limited. All rights reserved. This document may not, in whole or in part, be copied, photocopied, reproduced, translated, stored, or reduced to any electronic medium or machine-readable form, without prior written permission from Tait International Limited.

The word TAIT and the TAIT logo are trademarks of Tait International Limited.

All trade names referenced are the service mark, trademark or registered trademark of the respective manufacturers.

Disclaimer

There are no warranties extended or granted by this document. Tait International Limited accepts no responsibility for damage arising from use of the information contained in the document or of the equipment and software it describes. It is the responsibility of the user to ensure that use of such information, equipment and software complies with the laws, rules and regulations of the applicable jurisdictions.

Enquiries and Comments

If you have any enquiries regarding this document, or any comments, suggestions and notifications of errors, please contact your regional Tait office.

Updates of Manual and Equipment

In the interests of improving the performance, reliability or servicing of the equipment, Tait International Limited reserves the right to update the equipment or this document or both without prior notice.

Intellectual Property Rights

This product may also be made under license under one or more of the following patents:
- US7203207, AU2004246135, CA2527142, GB2418107, HK1082608, MY134526, US8306071
- US7339917, AU2004246136, CA2526926, GB2418812, MY134217
- US7499441, AU2005262626, CA2570441, GB2430333, JP4690397, NZ551231, KR100869043, RU2351080, BRP10512052, MXPA06015241
- US 7200129, AU2005226531, CA2558551, CN1930809, GB2429378, JP4351720, BRP10508671, NZ549124, KR848483, RU2321952

Environmental Responsibilities

Tait International Limited is an environmentally responsible company which supports waste minimization, material recovery and restrictions in the use of hazardous materials.

The European Union's Waste Electrical and Electronic Equipment (WEEE) Directive requires that this product be disposed of separately from the general waste stream when its service life is over. For more information about how to dispose of your unwanted Tait product, visit the Tait WEEE website at www.taitradio.com/weee. Please be environmentally responsible and dispose through the original supplier, or contact Tait International Limited.

Tait International Limited also complies with the Restriction of the Use of Certain Hazardous Substances in Electrical and Electronic Equipment (RoHS) Directive in the European Union.

In China, we comply with the Measures for Administration of the Pollution Control of Electronic Information Products. We will comply with environmental requirements in other markets as they are introduced.

Contents

Preface 6
Scope of Manual 6
Document Conventions 6
Associated Documentation 7
Publication Record 8

1 Description 9
1.1 Software Applications 10
1.1.1 Base Station Features 10
1.2 Frequency Bands and Sub-bands 11
1.3 Software Application Details 12
1.3.1 P25/AS-IP 12
1.3.2 DMR/MPT 13
1.4 Licenses 14
1.4.1 Compatibility 14
1.4.2 Feature licenses 15
1.5 Theory of Operation 18
1.5.1 Signal Paths 19
1.5.2 Online and Offline Modes 20
1.5.3 Power Supply 20
1.5.4 Front Panel Fans 20

2 General Safety and Regulatory Information 22
2.1 Personal Safety 22
2.1.1 Explosive Environments 22
2.1.2 High Temperatures 22
2.1.3 LED Safety (EN60825-1) 22
2.1.4 Proximity to RF Transmissions / A proximité des émissions RF 23
2.2 Equipment Safety 24
2.2.1 Installation and Servicing Personnel 24
2.2.2 Preventing Damage to the PA 24
2.2.3 ESD Precautions 24
2.3 Environmental Conditions 25
2.3.1 Operating Temperature Range 25
2.3.2 Humidity 25
2.3.3 Dust and Dirt 25
2.4 Regulatory Information 25
2.4.1 Distress Frequencies 25
2.4.2 Compliance Standards 25
2.4.3 Unauthorized Modifications 25
2.4.4 Health, Safety and Electromagnetic Compatibility in Europe 26
2.4.5 For Customers in Canada 26

© Tait International Limited April 2021

2.5 Device and Network Security . . . 26

3 Operation . . . 28

3.1 Front Panel LEDs . . . 28

3.2 Rear Panel LEDs . . . 29

3.2.1 Ethernet Connector LEDs . . . 29

4 Connecting to the Base Station . . . 30

4.1 PC Recommendations . . . 30

4.2 Connecting Your PC to the Base Station . . . 31

4.2.1 Logging In . . . 31

4.2.2 Setting the IP Address . . . 32

4.2.3 Security Certificates . . . 32

4.2.4 Local Connection to a Base Station . . . 32

4.2.5 Troubleshooting Connection Problems . . . 33

4.2.6 Finding a Lost or Forgotten IP Address . . . 34

4.2.7 Setting Up Authentication . . . 34

4.3 Working with the Web Interface . . . 35

4.3.1 Monitoring Operation . . . 36

4.3.2 Viewing Configuration Settings . . . 37

4.3.3 Viewing the Base Station and Network Identity . . . 38

4.4 Basic Tasks . . . 40

4.4.1 User Settings . . . 40

4.4.2 Taking the Base Station Offline . . . 40

4.4.3 Troubleshooting Alarms . . . 40

4.4.4 Working with Configuration Files . . . 41

4.4.5 Single or Channel Group Base Stations . . . 43

4.4.6 Marshaling or Transmit Delay . . . 43

4.4.7 Configuring Receive-Only Base Stations . . . 44

4.4.8 Setting Up Custom Alarms . . . 44

4.4.9 Updating Firmware . . . 45

4.4.10 Firmware upload . . . 46

4.4.11 Downloading Firmware from a Package Server . . . 47

4.4.12 Activating New Firmware . . . 47

4.4.13 Switching Application Packages . . . 48

4.4.14 Subaudible Signaling . . . 48

4.4.15 SNMP Network Management . . . 49

5 Installation . . . 50

5.1 Before You Begin . . . 50

5.1.1 Equipment Security . . . 50

5.1.2 Grounding and Lightning Protection . . . 50

5.1.3 Equipment Ventilation . . . 51

5.1.4 Ambient Temperature Sensor . . . 51

5.1.5 Cabinet and Rack Ventilation . . . 51

5.2 Unpacking the Equipment . . . 53

5.3 Identifying the Equipment . . . 54

© Tait International Limited April 2021

5.4 Initial Setting Up . . . 55
5.4.1 Confirming Operation . . . 55
5.4.2 Working with Configurations . . . 56
5.4.3 Customizing the Configuration . . . 58
5.4.4 Restricted Port Numbers . . . 59
5.4.5 Changing the Root Password . . . 59
5.4.6 Tuning the Receiver . . . 60
5.5 Installing the Base Station on Site . . . 62
5.5.1 Base Stations for Trunked Systems . . . 62
5.5.2 Equipment Required . . . 63
5.6 Mounting the Base Station . . . 63
5.6.1 Mounting and Support Kits . . . 64
5.7 Connecting the Base Station . . . 65
5.7.1 Connection Overview . . . 65
5.7.2 Connecting DC Power (12V DC variant) . . . 66
5.7.3 Connecting AC Power . . . 67
5.7.4 Connecting RF . . . 68
5.7.5 Connecting an External Frequency Reference . . . 69
5.7.6 Connecting a 1PPS Source . . . 70
5.7.7 Ethernet Connection . . . 71
5.7.8 Connecting General Purpose Inputs and Outputs . . . 72
5.7.9 Setting Up Simplex Operation . . . 73

6 Maintenance . . . 74

7 Troubleshooting . . . 75

Appendix A Interface Pin Allocations . . . 76
System Interface Connector . . . 76
Ethernet Connector . . . 76
Serial Connector . . . 76

Appendix B Installing the Firmware Package . . . 77
Mongoose Installation Package . . . 77
Setting Up a Central Package Server . . . 77
Setting up a Temporary Package Server . . . 78

Glossary . . . 79

Tait General Software License Agreement . . . 85

© Tait International Limited April 2021

Preface

Scope of Manual

This manual provides information on installing and operating the TB7300 base station. It is intended for use by experienced technicians familiar with installing and operating base station equipment. It also includes configuration, maintenance and troubleshooting information.

Document Conventions

The TB7300 base station has a web interface with an accordion menu on the left side of the screen. “Configure > Base Station > Channels” means click Configure in the top-level menu, then in the expanded Configure menu click Base Station, and finally click on the Channels tab on that page.

Within this manual, four types of alerts may be given to the reader. The following paragraphs illustrate each type of alert and its associated symbol.

Warning **This alert is used when there is a hazardous situation which, if not avoided, could result in death or serious injury.**

Caution This alert is used when there is a hazardous situation which, if not avoided, could result in minor or moderate injury.

Notice This alert is used to highlight information that is required to ensure procedures are performed correctly. Incorrectly performed procedures could result in equipment damage or malfunction.

This icon is used to draw your attention to information that may improve your understanding of the equipment or procedure.

© Tait International Limited April 2021

Associated Documentation

The current set of TB7300 product documentation is available on the Tait support website.

- TB7300 Specifications Manual (MBD-00002-xx).
- TN9300 DMR Radio Network System Manual (MNB-00003-xx).
- Tait Core Networks Installation and Configuration Manual (MNB-00012-xx).
- Safety and Compliance Information (MBA-00012-xx).
- TN9400 P25 Trunked Network Maintenance Manual (MNC-00001-xx)
- P25 Channel Group System Manual (MND-00002-xx)
- AS-IP Channel Group System Manual (MND-00001-xx)

Technical notes are published from time to time to describe applications for Tait products, to provide technical details not included in manuals, and to offer solutions for any problems that arise. Look for new or updated technical notes on the Tait support website.

© Tait International Limited April 2021

Publication Record

Issue	Publication Date	Description
16	April 2021	Updated for release 3.20 ■ B1 frequency band added ■ AC power variant added ■ Section 2.4.5 For Customers in Canada added ■ Section 3.2.1 Ethernet Connector LEDs updated ■ Section 4.4.14 Subaudible Signaling updated
15	November 2020	General updates for release version 3.15. ■ Minor updates throughout ■ Added notice about base station being offline before restoring ■ Added TB Logic feature license
14	June 2020	General updates for **Non-Patch Release** version 3.10. ■ Updating Firmware section features Reciter 2 content ■ Tables added with Reciter 1 and 2 comparisons ■ Activating Firmware section features Reciter 2 content ■ Minor updates throughout
14*	May 2020	General updates for **Patch Release** version 3.05.01. ■ Added H-band electronic tuning ■ Minor updates throughout
13	November 2019	General updates for release version 3.05. ■ Minor updates throughout ■ Wideband license added
12	July 2019	General updates for release version 3.00. ■ Interoperability between P25/AS-IP and DMR/MPT software applications ■ Terminology ■ List of channels ■ Loading channels and setting up firmware ■ Simplex operation ■ SNMP management and MIBs
11	March 2019	General updates for release version 2.60. ■ Updated licenses table to include MPT Trunked ■ Updated network connection screenshots ■ Included security risk information about Mongoose ■ Updated default configuration parameters ■ Mounting and Support Kits section added ■ Equipment section updated to include CTU and cable
10	December 2018	General updates for release version 2.55. ■ Updated root password information ■ Added that external reference is required for Simulcast ■ Web UI tab changed to Analog RF ■ Working with Configurations section now matches the TB9300 equivalent

© Tait International Limited April 2021

1 Description

The Tait TB7300 base station is a robust state-of-the-art digital fixed station that combines Tait's proven strengths in reliability and high performance with software-based configurability and operation, digital signal processing and Voice over IP (VoIP) technology.

Its Ethernet interface provides built-in network connectivity that allows the base station to join with other base stations to form a channel group. This network supports voice-over-IP and remote management of all base stations via a web browser.

1.1 Software Applications

The TB7300 operates in both P25/AS-IP and DMR/MPT networks. Within these networks, the base station utilizes distinct P25/AS-IP and DMR/MPT software applications.

1.1.1 Base Station Features

The following is a list of base station features for both P25/AS-IP and DMR/MPT/MPT software applications:

P25/AS-IP

- Fully compliant with the P25 Common Air Interface. Can therefore interoperate with any similarly compliant radios
- Supports P25 Phase 1 conventional operation with C4FM modulation on the transmitter
- Supports simulcast operation with P25 phase 1
- Analog conventional repeater operation
- Analog conventional simulcast operation on an IP backbone requiring no audio calibration or training
- Integrated built-in voting facility. No external voter is needed.

DMR/MPT

- Fully compliant with the DMR Tier 2 conventional and Tier 3 trunked standards. Can therefore interoperate with any similarly compliant radios.
- Analog conventional repeater operation
- Operation as control channel or traffic channel transceiver in MPT/MPT-IP networks, including standalone operation
- Digital simulcast operation

ⓘ DMR firmware does not support simplex operation.

Non-Application Specific

- Can be completely managed remotely from a PC running a web browser: configuration, alarm monitoring, fault diagnosis, syslog, feature and firmware upgrades. Alarms can also be reported via SNMP traps, allowing integration with an SNMP-based network management system.
- Rugged construction with generous heatsinks and fan-forced cooling for continuous operation from –30°C to +60°C (–22°F to +140°F)
- Supports an analog 600 Ohm connected repeater in an analog conventional network with CTCSS or DCS subaudible signaling[1]

---

1. Continuous Tone Coded Squelch System Commonly referred to as PL, an acronym for Private Line

(DCS) Digital Code Squelch Commonly referred to as Digital Private Line

© Tait International Limited April 2021

1.2 Frequency Bands and Sub-bands

Much of the circuitry in the base station is common to all frequency bands, and is therefore covered by a single description in this manual. In some cases the descriptions refer to specific bands or sub-bands, and these are identified with the letters listed in the following table.

Frequency Identification	Frequency Band and Sub-band	40W	50W
B band	B1 = 136MHz to 174MHz B3 = 148MHz to 174MHz	✗ ✗	✓ ✓
H band	H3 = 470MHz to 520MHz H5 = 400MHz to 470MHz	✓ ✓	✗ ✗

© Tait International Limited April 2021

1.3 Software Application Details

1.3.1 P25/AS-IP

With the P25/AS-IP software application, the TB7300 is interoperable with TB9400 base stations, and therefore operates in P25 conventional networks and analog conventional networks. It operates as a stand-alone repeater/ base station, or as part of a channel group, providing receiver voting and simulcast transmission. All air interfaces and system types support simulcast operation.

In a P25 conventional network, the TB7300 operates as a single or wide area conventional repeater, with receiver voting and optional simulcast.

Dispatch connection is via three distinct interfaces:

- P25 standard DFSI connection (up to three connections simultaneously)
- Analog line
- Tait P25 Console Gateway, supporting conversion between P25 and analog consoles with MDC1200 signaling

In an analog conventional network, the base station can operate as a repeater with CTCSS or DCS subaudible signaling.

The base station can also operate as part of an analog conventional simulcast network and is fully IP-connected. The base station also features an internally integrated voter, and therefore requires no external voter.

For more information on these applications, refer to the Help and appropriate Tait System Manual.

© Tait International Limited April 2021

1.3.2 DMR/MPT

The TB7300 is designed for operation in a Tait TN9300 DMR conventional radio network, a Tait TN9300 DMR trunked radio network, an MPT network, or as an analog conventional repeater.

In a DMR conventional network, the TB7300 can operate as a stand-alone repeater, or as a member of a multi-site system (under the supervision of a DMR conventional channel controller). Since DMR provides two logical channels (timeslots) simultaneously for each radio frequency (physical channel), two users can alternately access the same frequency, one in each timeslot. Base stations on different sites can be linked together to form channel groups. A base station can support two channel groups, one in each timeslot.

In a DMR/MPT trunked network the TB7300 can operate as a control channel or as a traffic channel. With two logical channels for each radio frequency, a single TB7300 base station can provide two traffic channels, two control channels, or both a traffic channel and a control channel.

In an MPT network, the TB7300 operates as a control channel or as a traffic channel. The TB7300 operates with a trunking node, or in fallback operation it can operate in either trunked or conventional mode.

In analog operation it can operate as a conventional repeater with CTCSS subaudible signaling and DCS subaudible signaling.

For more information, refer to the DMR/MPT/MPT-IP System Manuals.

© Tait International Limited April 2021

1.4 Licenses

Some operational functions of the base station are controlled by licenses. These functions will not work unless you purchase the appropriate feature license and enable the feature set controlled by that license.

ⓘ Regardless of which software application you have configured on the TB7300, you can add and remove both P25/AS-IP and DMR/MPT licenses.
Note that only licenses associated with your currently configured application will be enabled.

For more detailed information, please see the base station help.

1.4.1 Compatibility

The compatibility rules for P25/AS-IP and DMR/MPT are defined in the following tables:

		TN9400 - Site Controller		
		Access	**Express6**	**Full System**
Base Station	**P25 Access Trunking**	✓	✗	✗
	P25 Express6 Trunking Operation	✓	✓	✗
	P25 Trunking Operation	✓	✓	✓

ⓘ The base stations in a Tait DMR trunked network are controlled by a node (DMR trunking node controller). Tait sells three types of node: Full, Express20 and Express6. Each type of node has different capabilities. Refer to TN-2134 for more information

		DMR/MPT - Node Controller			
		Full	**Express20**	**Express6**	**Standalone Access**
Base Station	**Full**	✓	✓	✓	✓
	Express20	✗	✓	✓	✓
	Express6	✗	✗	✓	✓
	Access	✗	✗	✗	✓

© Tait International Limited April 2021

1.4.2 Feature licenses

The following section lists each of the available feature licenses for both P25/AS-IP and DMR/MPT.

P25/AS-IP Feature licenses	
Feature license	**Description**
Analog Air Interface (TBAS041)	A base station with this license can operate as a repeater in an analog conventional network
P25 Common Air Interface (TBAS050)	Allows a base station to transmit and receive P25 Phase 1 C4FM digital voice transmissions
P25 DFSI (TBAS060)	Allows the base station to integrate with dispatch consoles supporting DFSI (Digital Fixed Station Interface)
P25 AS-IP Central Voter (TBAS061)	P25 and analog. This feature allows a base station to act as a central voter.
P25 AS-IP Simulcast (TBAS062)	This feature is required in base stations that have transmitters and belong to a P25 Phase 1 simulcast or analog simulcast network[a]. It is also required in the central voter of a simulcast channel.
P25 AS-IP IP Networking Satellite (TBAS071)	All system types and all air interface types. This feature allows a base station to be part of a channel group without requiring the Central Voter (TBAS061) license.
TB Logic programming (TBAS073)	Allows for TB Logic programming
20/25 kHz Unrestricted Wideband (TBAS083)	Allows a base station to be configured to operate in wideband mode on an analog channel, which provides a maximum deviation of 5KHz, and a 25KHz channel spacing

a. Not needed for receive-only base stations.

DMR/MPT Feature licenses	
Feature license	**Description**
Analog Air Interface (TBAS301 - Default License)	A base station with this license can operate as an MPT transceiver or an analog conventional repeater
DMR Conventional (TBAS304)	A base station with this license can operate in a Tait DMR conventional network. It can also operate as a stand-alone repeater, or as a member of a multi-site system (under the supervision of a DMR conventional channel controller).
DMR Trunking Access (TBAS303)	A base station with this license can accept connections only from an Access standalone node. This license entitles a standalone node to control a single site of up to four physical channels.
DMR Trunking Express6 (TBAS302)	A base station with this license can accept connections from any Express node/standalone node or Access standalone node. In single-site trunking and fallback modes, this license entitles a standalone node to control a single site of up to 6 physical channels.
DMR Trunking Express20 TBAS305	A base station with this license can accept connections from: ■ An Express20 node ■ An Express6 node ■ A Standalone node ■ A Standalone Access node A base station with both a DMR conventional license and a valid DMR trunking license (such as Express or Access) can be configured to operate in either mode. This enables a DMR Tier 2 base station to be reconfigured and re-used in a DMR Tier 3 trunked network.
DMR Trunking Full (TBAS300)	A base station with this license can accept connections from any node/ standalone node[a]
DMR Central Voter (TBAS306)	This feature allows a base station to act as a DMR central voter
DMR IP Networking Satellite (TBAS307)	This feature allows a DMR base station to be part of a channel group

a. The base station itself can act as a DMR trunking controller, but with limited functionality. The base station is then said to be a standalone node.

Licenses are not lost or changed under software upgrades, downgrades, and changes of system type. Older software may not display all licenses.

© Tait International Limited April 2021

License	Name	Air Interface	System Type
TBAS041	Analog Air Interface	Analog	Conventional
TBAS050	P25 Common Air Interface	P25 Phase 1	Conventional
TBAS060	Digital Fixed Station Interface	Analog & P25 Phase 1	Conventional
TBAS061	P25 AS-IP Central Voter	Analog & P25 Phase 1	Conventional
TBAS071	P25 AS-IP IP Networking Satellite	Analog & P25 Phase 1	Conventional
TBAS062	P25 AS-IP Simulcast	Analog & P25 Phase 1	Conventional
TBAS301	Analog Air Interface	Analog	Conventional/MPT Trunked
TBAS304	DMR Conventional	DMR	Conventional
TBAS303	DMR Trunking Access	DMR	Trunked
TBAS302	DMR Trunking Express6	DMR	Trunked
TBAS305	DMR Trunking Express20	DMR	Trunked
TBAS300	DMR Trunking Full	DMR	Trunked
TBAS306	DMR Central Voter	DMR	Trunked/Conventional
TBAS307	DMR IP Networking Satellite	DMR	Trunked/Conventional

1.5 Theory of Operation

The RF input is fed directly to the receiver board, while the RF output is via the exciter and PA boards. The control board also receives signals from, and sends signals to, the system interface, the Ethernet interface, and the front interface (see Figure 1.1).

The Ethernet interface carries VoIP and also allows maintainer access via a web browser.

Figure 1.1 Base station high-level diagram

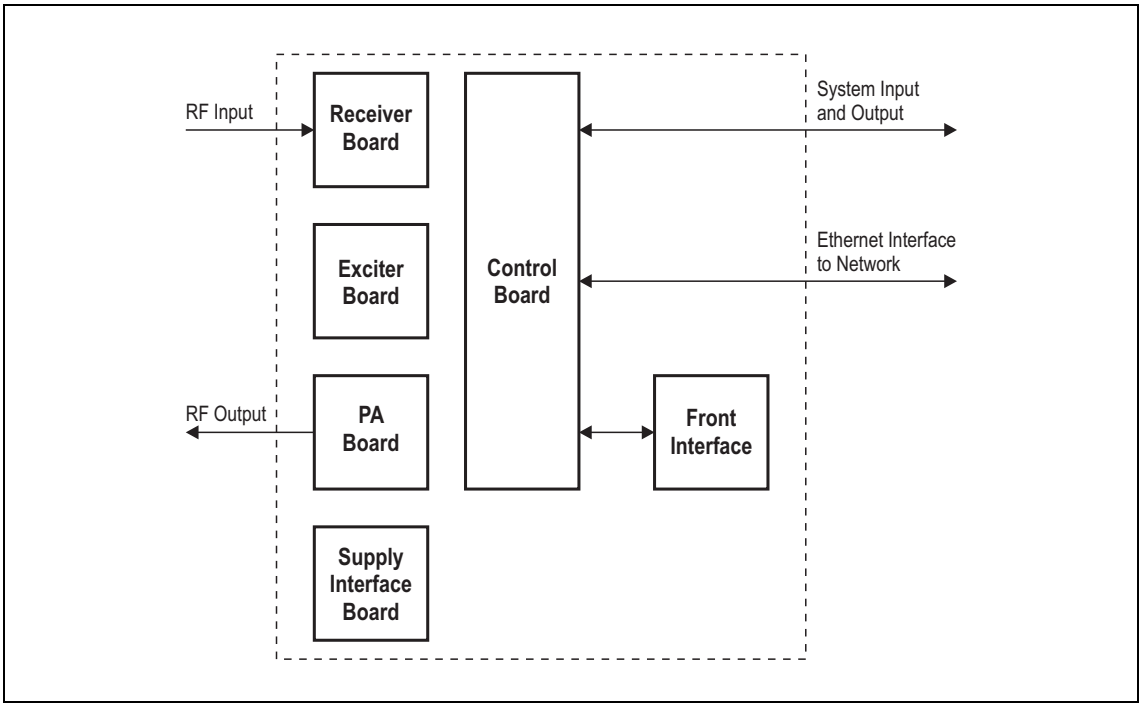

The control board carries out signal processing and has overall control of the base station.

The control board converts information between analog and digital and controls the maintainer's access via the Ethernet interface. It performs the air interface signal processing for digital DMR and P25 operation, gives the base station an identity as a network element, and provides the physical connections for the Ethernet and system interfaces.

© Tait International Limited April 2021

1.5.1 Signal Paths

The following figures provide an overview of signal paths within the control boards for both software applications:

P25

Digital P25 signals from the receive RF interface pass through the digital receiver and P25 modem to the control software in the control processor. The control software passes the signal through the Ethernet interface to the site controller, to the console gateway (conventional networks), or for a satellite, to the central voter in a simulcast system.

Input to the Ethernet interface can be from the site controller, from the console gateway (conventional networks), or from the central voter in a simulcast system. These inputs are processed by the control processor and passed through the P25 modem to the transmitter. If the base station is itself a central voter, this input can also be a received signal, which is voted on and sent back through the Ethernet interface to the site controller.

Figure 1.2 Control board signal paths

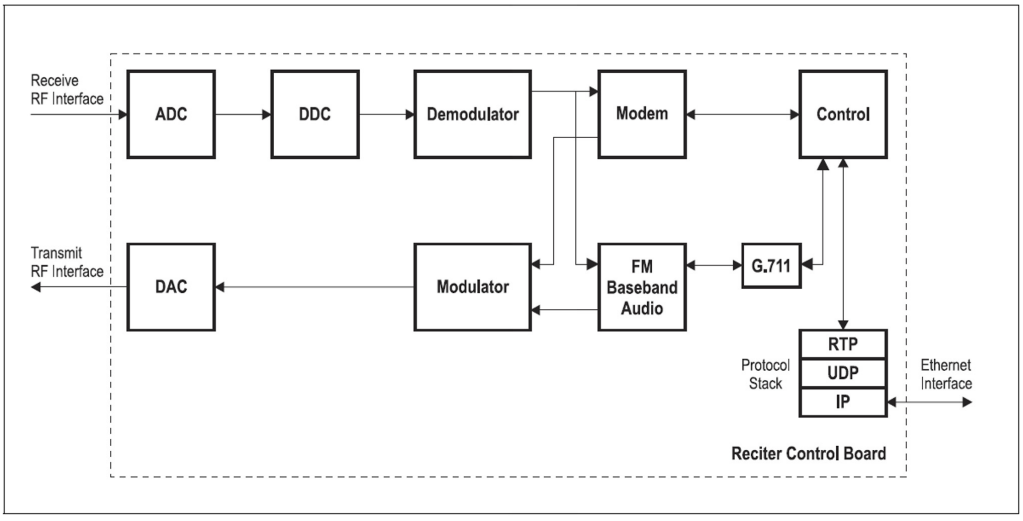

DMR

Input to the Ethernet interface is from the node controller. This input is processed by the RISC and passed through the DMR modem to the transmitter.

MPT

Analog FM signals from the receive RF interface pass through the digital receiver and are converted to G.711 before being modulated and retransmitted.

1.5.2 Online and Offline Modes

The base station normally operates in Online mode, but you can put it into Offline mode via its web interface.

Online Mode

In Online mode, the base station is in service and performs its normal functions of transmitting and receiving radio signals.

Offline Mode

Offline mode allows a maintenance engineer to carry out tasks that cannot be done while the base station is in service; such as activating firmware or running diagnostic tests.

1.5.3 Power Supply

DC Power

The DC powered TB7300 will operate from 10.9 VDC to 16 VDC. For the equipment to power on the voltage must be 12 V or greater.

The nominal operating voltage is 13.8 VDC.

The DC input is protected by a fuse rated at 15 A.

AC Power

The AC powered TB7300 will accept any input voltage from 100 VAC to 253 VAC at 50/60 Hz.

The nominal operating voltages are 120 VAC or 230 VAC.

The AC power supply is protected by an internal fuse. It is not user serviceable.

1.5.4 Front Panel Fans

The base station is equipped with three fans for DC variants, and a fourth fan for the power supply is installed in AC variants. Two fans are for the PA, and the third is for the receiver, exciter and control boards. Front panel fans do not operate continuously, but are switched on and off as needed. The fans can also be temporarily enabled for test purposes via the web

© Tait International Limited April 2021

interface. The power supply fan runs when the PA fans are operating.

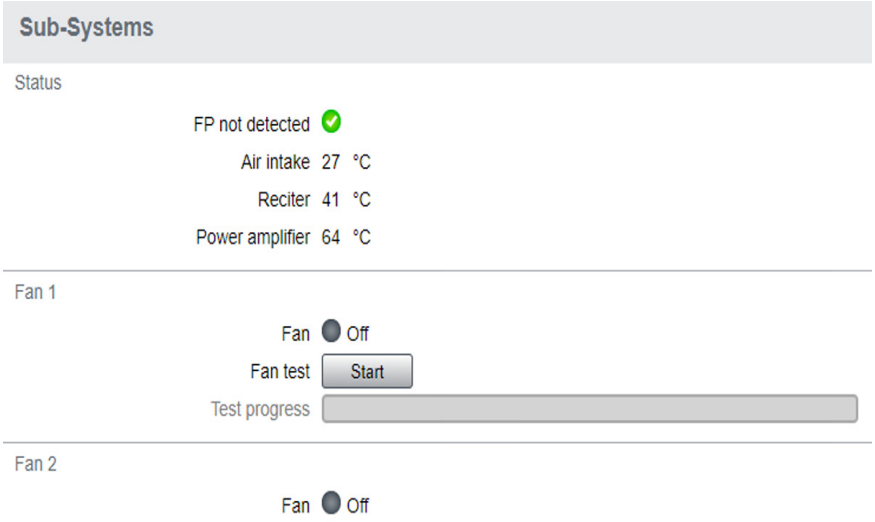

When the base station is powered up, the fans turn on until the main software fully boots.

2 General Safety and Regulatory Information

This chapter provides general information on safety precautions for operating the base station.

2.1 Personal Safety

2.1.1 Explosive Environments

Warning **Do not operate the equipment near electrical blasting caps or in an explosive atmosphere. Operating the equipment in these environments is a major safety hazard.**

2.1.2 High Temperatures

Take care when handling a base station that has been recently operated. Under extreme operating conditions (+140°F [+60°C] ambient air temperature) or high duty cycles, the external surfaces of the base station can reach temperatures of up to +176°F (+80°C).

2.1.3 LED Safety (EN60825-1)

This equipment contains Class 1 LED Products.

© Tait International Limited April 2021

2.1.4 Proximity to RF Transmissions / A proximité des émissions RF

To comply with the RF Field Limits for Devices Used by the General Public for (Uncontrolled Environment)[a], a safe separation distance of at least 22 feet (6.5 metres) from the antenna system should be maintained.

This figure is calculated for a typical installation, employing one 50 W base station transmitter. Other configurations, including installations at multi-transmitter sites, must be installed so that they comply with the relevant RF exposure standards.

a. Reference Standards
Health Canada's Safety Code 6: *Limits of Human Exposure to Radiofrequency Electromagnetic Energy in the Frequency Range from 3 kHz to 300 GHz*
USA Federal Communications Commission OET bulletin 65 (47CFR 1.1310)
IEEE C95.1 2005: *Standard for Safety Levels with Respect to Human Exposure to Radio Frequency Electromagnetic Fields, 3 kHz to 300 GHz*

Pour respecter les limites imposées au champ RF au niveau des équipements utilisés par le grand public (environnement non contrôlé)[a], une distance de séparation de sécurité d'au moins 6.5 mètres du bloc d'antenne devrait être observée.

Ce nombre est calculé pour une installation typique, ayant un émetteur de station de base de 50 W. D'autres configurations, incluant les installations ayant des sites de plusieurs émetteurs, doivent être installées de façon à se conformer aux normes pertinentes des expositions RF.

a. Normes de référence
Code de sécurité 6 de Santé Canada: *Limites d'exposition humaine à l'énergie électromagnétique radioélectrique dans la gamme de fréquences de 3 kHz à 300 GHz*
Commission fédérale des communications (FCC) des Etats Unis d'Amérique bulletin OET numéro 65 (47CFR 1.1310)
IEEE C95.1 2005: *Norme pour les niveaux de sécurité compatibles avec l'exposition des personnes aux champs électromagnétiques de radiofréquence 3 kHz à 300 GHz*

2.2 Equipment Safety

2.2.1 Installation and Servicing Personnel

The equipment should be installed and serviced only by qualified personnel.

2.2.2 Preventing Damage to the PA

The base station has been designed to operate safely under a wide range of antenna loading conditions. Transmitting into a low VSWR will maximize the power delivered to the antenna.

Notice Do not remove the load from the TB7300 while it is transmitting.

Load transients (switching or removing the load) can damage the PA output stage. See "Connecting RF" on page 68 for recommendations.

2.2.3 ESD Precautions

Notice This equipment contains devices which are susceptible to damage from static charges. You must handle these devices carefully and according to the procedures described in the manufacturers' data books.

We recommend you purchase an antistatic bench kit from a reputable manufacturer and install and test it according to the manufacturer's instructions. Figure 2.1 shows a typical antistatic bench set-up.

You can obtain further information on antistatic precautions and the dangers of electrostatic discharge (ESD) from standards such as ANSI/ESD S20.20-1999 or BS EN 100015-4 1994.

Figure 2.1 Typical antistatic bench set-up

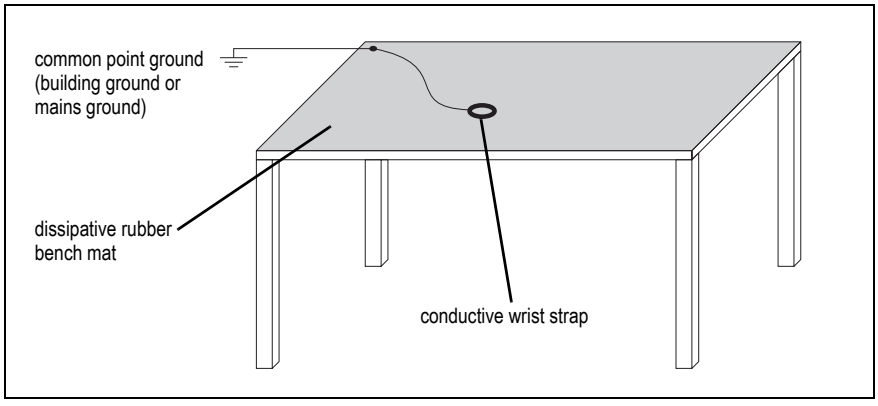

© Tait International Limited April 2021

2.3 Environmental Conditions

2.3.1 Operating Temperature Range

The operating temperature range of the equipment is −30°C to +60°C (−22°F to +140°F) ambient temperature. Ambient temperature is defined as the temperature of the air at the intake to the cooling fans.

2.3.2 Humidity

The humidity should not exceed 95% relative humidity through the specified operating temperature range.

2.3.3 Dust and Dirt

For uncontrolled environments, the level of airborne particulates must not exceed 100 µg/m^3.

2.4 Regulatory Information

2.4.1 Distress Frequencies

The 406 to 406.1 MHz frequency range is reserved worldwide for use by Distress Beacons. **DO NOT** program transmitters to operate in this frequency range.

2.4.2 Compliance Standards

This equipment has been tested and approved to various national and international standards. Refer to the latest issue of the Specifications Manual for a complete list of these standards (MBD-00002-xx).

2.4.3 Unauthorized Modifications

Any modifications you make to this equipment not authorized by Tait may invalidate your compliance authority's approval to operate the equipment.

The manufacturer is not responsible for any radio or TV interference caused by unauthorized modifications to this equipment. Such modifications could void the user's authority to operate the equipment.

© Tait International Limited April 2021

2.4.4 Health, Safety and Electromagnetic Compatibility in Europe

In the European Community, radio and telecommunications equipment is regulated by Directive 2014/53/EU. The requirements of this directive include protection of health and safety of users, as well as electromagnetic compatibility.

Intended Purpose of Product

This product is a radio transceiver. It is intended for radio communications in the Private Mobile Radio (PMR) or Public Access Mobile Radio (PAMR) services, to be used in all member states of the European Union (EU) and states within the European Economic Area (EEA). This product can be programmed to transmit on frequencies that are not harmonised throughout the EU/EEA, and will require a license to operate in each member state.

Declaration of Conformity

You can download the formal Declaration of Conformity from www.taitradio.com/eudoc.

2.4.5 For Customers in Canada

The TBDB1G radio transmitter has been approved by Innovation, Science and Economic Development Canada to operate with the antenna type listed below, with the maximum permissible gain indicated. Antenna types not included in this list that have a gain greater than the maximum gain indicated for any type listed are strictly prohibited for use with this device.

Antenna Type	Max. Gain dBd (dBi)
RFI OA40-41	9 (11.1)

Warning **It is the responsibility of the user to ensure that use of such information and equipment complies with the laws, rules and regulations of the applicable jurisdictions.**

2.5 Device and Network Security

If this radio network equipment is used for mission-critical applications, it is important to be able to ensure security and continuity of operation. For IP-network-connected equipment, it is also important to ensure that this equipment is not a means of compromising other equipment in the network.

All network elements should be physically secured, where possible. This includes the use of locked cabinets and locked rooms. Seals on connectors can also provide a visual indication of unauthorized tampering.

Tait recommends that all network and audio connectors should be sealed with a stick-on type of seal. The seal should reveal if any of the connectors

© Tait International Limited April 2021

have been unplugged, or if any unauthorized equipment has been plugged in.

The seals should be difficult to remove without breaking, and should bridge between the cable and equipment side (plug and socket) of the connection.

Seals should cover any unused network or audio sockets. This includes the Ethernet connector on any adaptor front panels, any spare switch ports, and the console port on the router and switch.

The seals should be difficult to reproduce. A sticker initialed or signed by the technician should satisfy this.

Seals must be replaced if they need to be disturbed during maintenance.

3 Operation

3.1 Front Panel LEDs

The indicator LEDs on the front panel are shown in Figure 3.1 below.

Figure 3.1 LEDs on the front panel

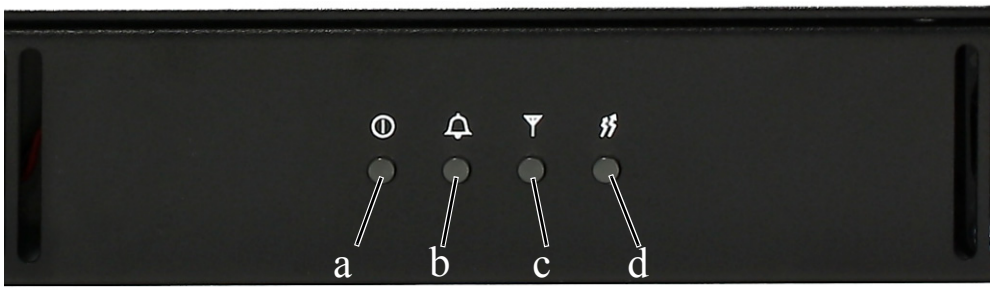

a power LED
b alarm LED
c receive LED
d transmit LED

a **Power LED**

The green power LED is lit when power is supplied to the base station.

b **Alarm LED**

The red alarm LED flashes when an alarm has been generated by any of the base station modules. It will continue to flash until the alarm is canceled or the fault is fixed. Only alarms enabled using the web interface cause this LED to flash.

LED	Description
Flashing	One or more faults are present
On (steady)	A base station is in Offline mode, and no faults are present
Off	A base station is in Online mode, and no faults are present

c **Receive LED**

The amber receive LED indicates whether the base station is receiving a valid RF signal on one or both logical channels.

LED	Description
On (steady)	A base station is receiving a valid RF signal
Off	A base station is not receiving a valid RF signal

d **Transmit LED**

The amber transmit LED is lit while the transmitter is transmitting.

© Tait International Limited April 2021

3.2 Rear Panel LEDs

3.2.1 Ethernet Connector LEDs

The ethernet indicator LEDs at the rear of the TB7300 are shown in Figure 3.2 below.

Figure 3.2 Ethernet indicator LEDs

a 10Base-T Ethernet Connector LED (green) b 100Base-T Ethernet Connector LED (amber)

Series 2

10Base-T Ethernet The green Ethernet connector LED will flash and the amber LED will be off if the connection is running at 10 Mbits/s.

100Base-T Ethernet The green Ethernet connector LED will flash and the amber connector will be on if the connection is running at 100 Mbits/s.

Series 1

10Base-T Ethernet The green Ethernet connector LED will be on and the amber LED will be off if the connection is running at 10 Mbits/s.

100Base-T Ethernet The green ethernet connector LED will be off and the amber connector will be on if the connection is running at 100 Mbits/s.

4 Connecting to the Base Station

The web browser on your PC provides a window into the TB7300 base station. Use it to connect to the base station so that you can monitor, configure, diagnose, and calibrate it (if required).

This section describes the following:

- Connecting to the base station, including initially setting things up
- Working with base station web pages
- Carrying out basic tasks

This section provides an overview of some aspects of the web interface. Refer to the Help for detailed instructions.

4.1 PC Recommendations

We recommend the following PC hardware and software for connecting to a TB7300 base station:

- SVGA Monitor (1024 x 768 minimum)
- Network connection
- The base station works with recent versions of most modern browsers

Notice Refer to the Release Notes for more information on currently supported browsers.

© Tait International Limited April 2021

4.2 Connecting Your PC to the Base Station

You connect to a base station using your web browser. Using multiple browser windows or tabs, you can view more than one base station and more than one page of any base station at once. Base stations have a web-based interface that provides the pages you view. Up to ten users may be logged in to a base station at once.

ⓘ When loading the web user interface with Internet Explorer, the web page may go blank. To fix this, refresh the page with the 'F5' key.

The base station has three different user access levels: Administrator, Maintainer, and Monitor. Passwords can be defined for each level. This is done using the base station's web interface (Tools > Settings > Local users). Refer to the Help for more information on setting user access levels.

Connections to the base station can be authenticated by a remote (i.e. centralized) service. Refer to the Help and "Setting Up Authentication" on page 34 for more information.

4.2.1 Logging In

1. Enter the base station's IP address into your browser using a secure connection (https://). The default factory IP address is 192.168.1.2. To find out the base station's IP address, refer to "Finding a Lost or Forgotten IP Address" on page 34.

2. A security warning appears when you connect for the first time. Proceed anyway (refer to "Security Certificates" on page 32).

3. The log in screen appears.

4. Enter your user name and password. When connecting for the first time, enter the user name **`admin`** and password **`tbc_admin`**.

5. Click Log In.

Notice After logging in we recommend that you change the password and username for your own security (refer to "Working with the Web Interface" on page 35). Make sure that you store your passwords

and usernames securely and do not lose them. They may be needed by Tait support personnel if assistance is required. **Tait cannot retrieve forgotten passwords.**

4.2.2 Setting the IP Address

Before the base station is installed on site, you need to provide it with its proper IP address. Make sure that you do not lose this address.

1. Select Identity > Identity > Network.
2. Enter the required details in the Change network identity area and click Save.

ⓘ When a user saves or changes the IP address of an online base station, the base station will sometimes reset. Tait recommends that all configuration changes are made after taking the base station offline.

4.2.3 Security Certificates

You can upload your own security certificates to the base station (Tools > Settings > Web certificate). If you have installed and configured the appropriate Certification Authority software, you can issue security certificates for all base stations. After uploading the certificates to the base stations, you can configure all maintainers' web browsers to accept security certificates from your own Certification Authority.

ⓘ Before you have uploaded a security certificate to the base station, it will raise a security warning when your browser connects to it for the first time. The base station creates a self-signed certificate when the firmware is installed. Your browser raises a security warning because the security certificate was not issued by a trusted Certification Authority. The browser will have an option to let you override or bypass the security warning.

4.2.4 Local Connection to a Base Station

Using a computer on site normally requires the computer to have an IP address that is compatible with the sub-netting and routing used by the communications network. Additionally, you may need to connect to a reciter after removing it from service.

In either case, you may have to change your computer IP address configuration.

To connect the base station to your computer, ensure that your computer is part of the same subnet as the base station, or has a route to it. Refer to your operating system provider's Help for further information.

© Tait International Limited April 2021

Base stations leave the factory with default IP address: 192.168.1.2, Subnet mask: 255.255.255.0. If your base station will still not connect to your PC, contact your local Tait dealer.

You may need to temporarily disconnect a networked PC from its LAN in order to establish a direct connection with the base station. A physical connection is needed as well as an alternate or temporary IP address and subnet mask.

4.2.5 Troubleshooting Connection Problems

If the attempt to connect to a base station failed, consider these possible causes:

1. Your PC is part of your organization's LAN and does not belong to the same subnet as the base station. Give the PC a suitable IP address and subnet mask as described in "Local Connection to a Base Station" on page 32.

2. You are attempting to connect to the wrong IP address. Check that the IP address is correct.

3. The link to the base station is down. Use ping to check.

4. A connection error may occur if your PC is using the organization's web proxy, but the base station doesn't have a valid gateway address allowing it to send responses back to that proxy. Users should ensure that all network parameters are correct (IP address, network mask and gateway address). You may have to bypass the proxy in your organization's LAN to access the radio communications network. Ask your system administrator to give you access.

5. JavaScript may be disabled in your browser. If JavaScript is disabled, your browser will be unable to connect to the base station. Note that modern browsers normally have JavaScript enabled by default.

© Tait International Limited April 2021

4.2.6 Finding a Lost or Forgotten IP Address

Use the following procedure if an IP address has been lost or forgotten:

1. Connect your PC to the serial port on the back of the base station.
2. Run a program such as HyperTerminal, Teraterm or minicom.
3. Select the following port settings: 57600 baud, 8 data bits, no parity, 1 stop bit, no flow control.
4. Enter `root` as a login name, and enter the root password when requested (the default is `k1w1`).
5. Type `ifconfig` and press Enter. The IP address is displayed on the second line returned as `inet addr:xxx.xxx.xxx.xxx`.

4.2.7 Setting Up Authentication

Connections to the base station can be authenticated by a remote (i.e. centralized) service (Tools > Settings > Authentication). Two remote authentication protocols are supported: LDAP and RADIUS.

Notice Only people experienced with the AAA architecture and authentication protocols should make changes on this page.

Moving logins to a centralized server can provide enhanced security for a number of reasons, such as:

- Less work is required to manage password-controlled access to all base stations in a network; you no longer need to change the password in each base station individually
- Previously used passwords may be excluded from re-use
- Access can be denied after a set number of incorrect passwords is entered
- Passwords can be set to expire on a certain date
- Remote access to base stations can be globally enabled and disabled as required for technical staff during the commissioning process

Once the centralized server logins are set up, we recommend that only one local administrator login is left on the base station for emergency use (e.g. when the connection to the server is lost).

The password for this emergency login should be confidential.

© Tait International Limited April 2021

4.3 Working with the Web Interface

This section provides an overview of the web interface (Web UI). Refer to the Help for detailed instructions.

When you connect to a base station, the browser displays a page like the following:

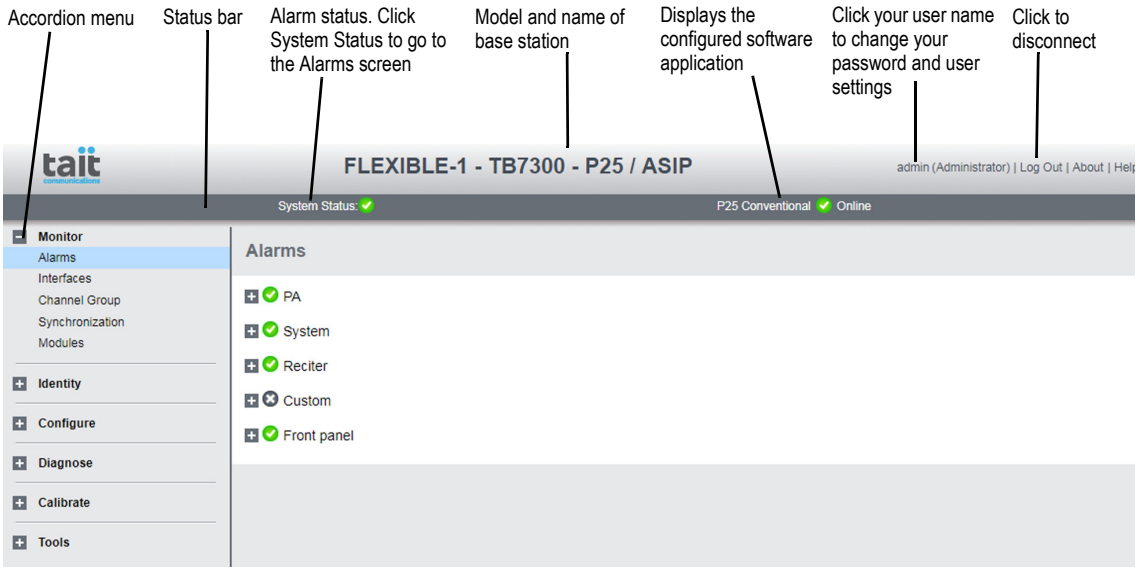

The accordion menu on the left gives you access to the various pages. Click a top level item (such as Configure) to open up its menu. Click on a menu item to display its page, then click on the appropriate tab on that page to display the required information. Click the (+) icon on a menu item to expand the menu tree and the (−) icon to collapse it again.

ⓘ Using a browser window size smaller than 1024 x 768 may cause some pages to display incorrectly.

4.3.1 Monitoring Operation

Using the monitoring pages, you can see how the base station is currently operating.

The example screen below illustrates the base station's network interface under DMR/MPT conditions: **(Monitor > Interfaces > DMR Network Connections/MPT Network Connections)**.

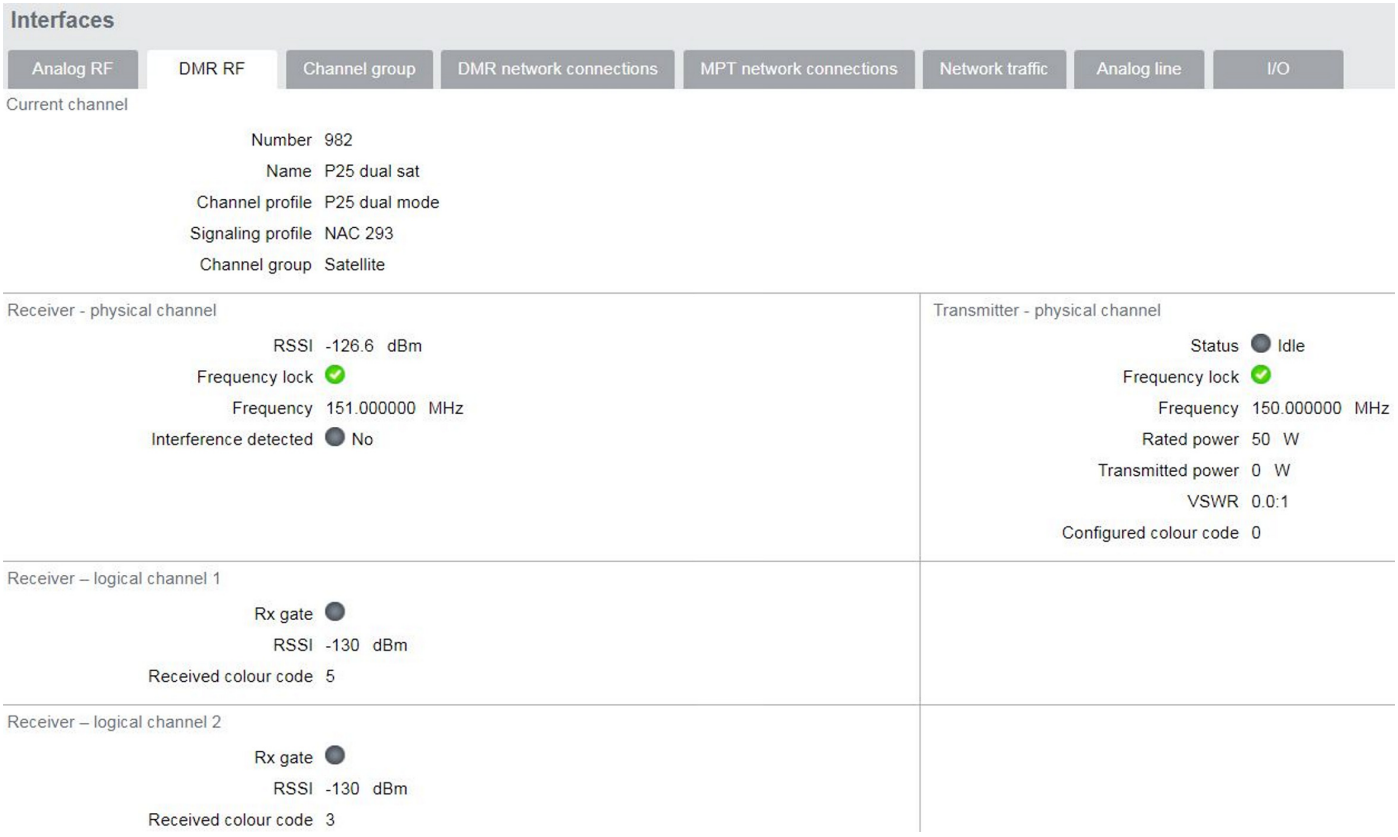

An equivalent screen appears under P25/AS-IP conditions (Monitor > Interfaces > Trunked RF).

© Tait International Limited April 2021

4.3.2 Viewing Configuration Settings

The base station has many configuration settings that personalize it for its particular role in the network. Some settings, such as those for alarm thresholds (Configure > Alarms > Thresholds), always apply.

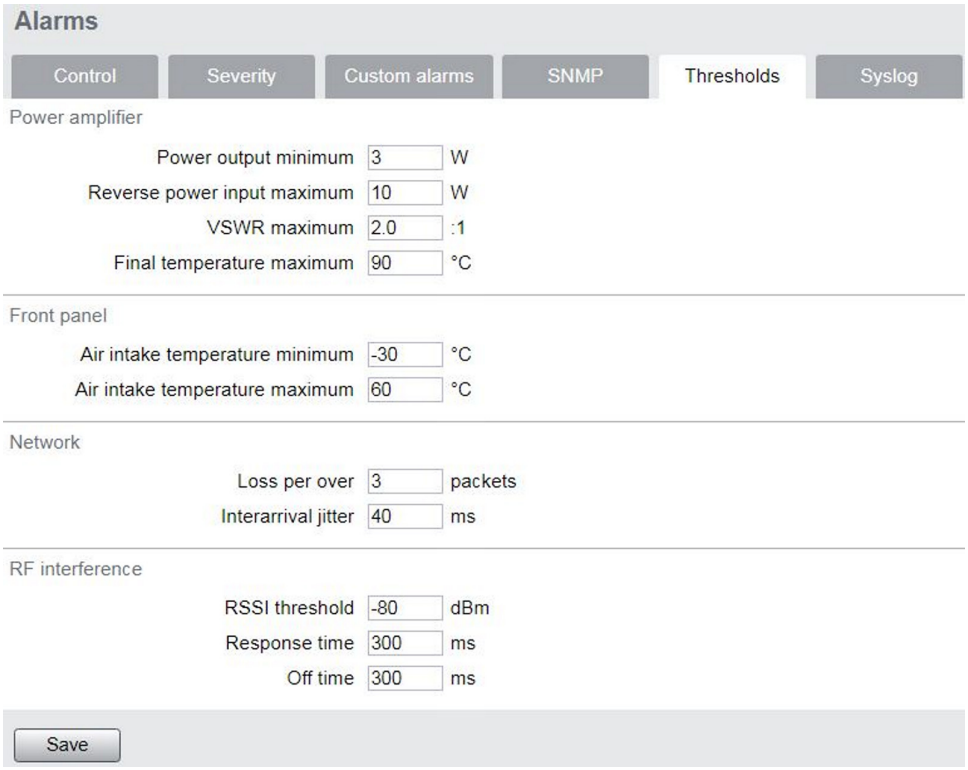

Others are channel-based so that they can be dynamically changed. To view these, you first need to know the channel that the base station is operating on.

To see the channel number and profiles the base station is using, go to:

- P25/AS-IP: Monitor > Interfaces > Conventional RF.
- DMR/MPT: Monitor > Interfaces > Analog RF or DMR RF.

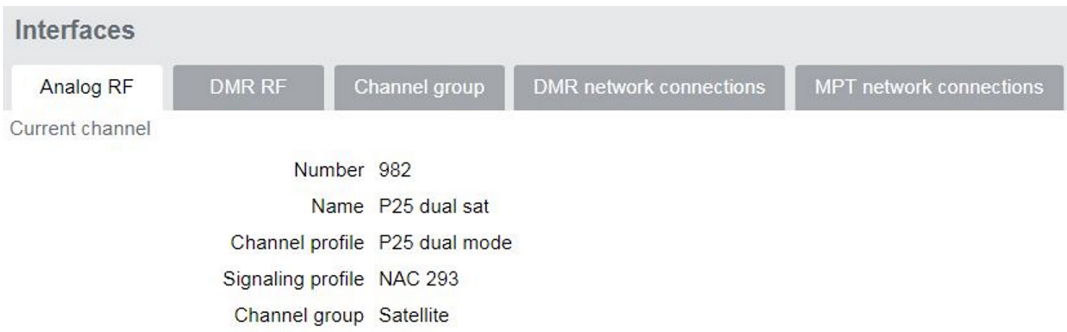

4.3.3 Viewing the Base Station and Network Identity

Base Station Channels

Channels can be edited from Configure > Base Station > Channels. Select a channel and click Edit to view details of the channel. Clicking directly on any text in a line will also open the edit screen.

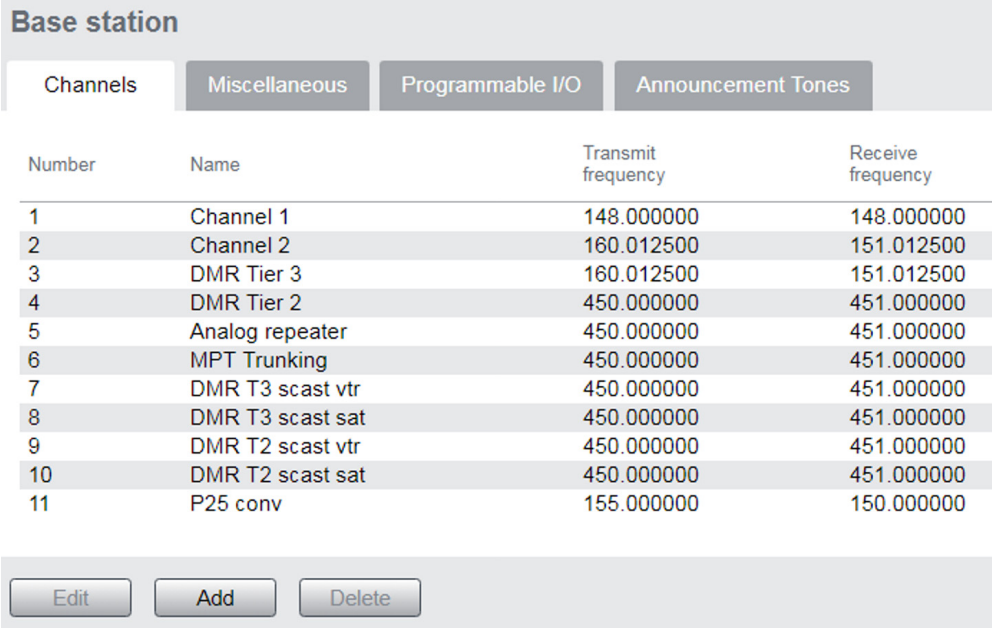

Number	Name	Transmit frequency	Receive frequency
1	Channel 1	148.000000	148.000000
2	Channel 2	160.012500	151.012500
3	DMR Tier 3	160.012500	151.012500
4	DMR Tier 2	450.000000	451.000000
5	Analog repeater	450.000000	451.000000
6	MPT Trunking	450.000000	451.000000
7	DMR T3 scast vtr	450.000000	451.000000
8	DMR T3 scast sat	450.000000	451.000000
9	DMR T2 scast vtr	450.000000	451.000000
10	DMR T2 scast sat	450.000000	451.000000
11	P25 conv	155.000000	150.000000

Base Station Identity

Each base station in a network has a unique base station and network identity.

Select Identity > Identity and then Network or Base Station to view details such as name, default channel and network addresses. Note that the Host name field has a maximum of 63 characters, and may use the characters a–z, 0–9, dot and hyphen. You cannot use spaces.

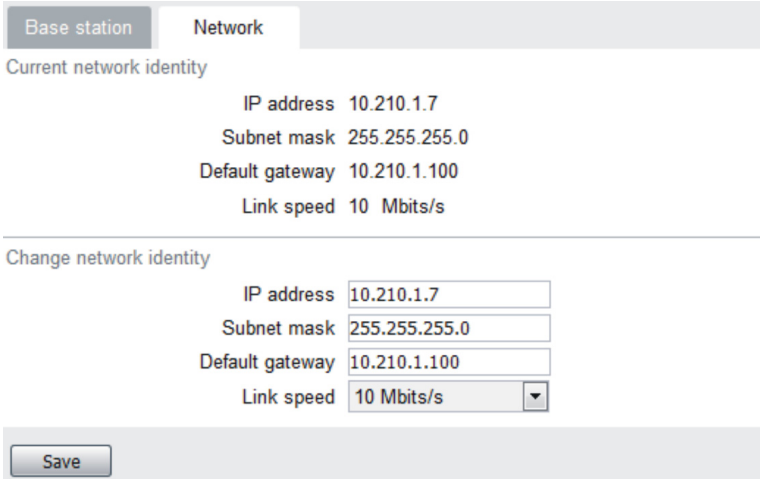

© Tait International Limited April 2021

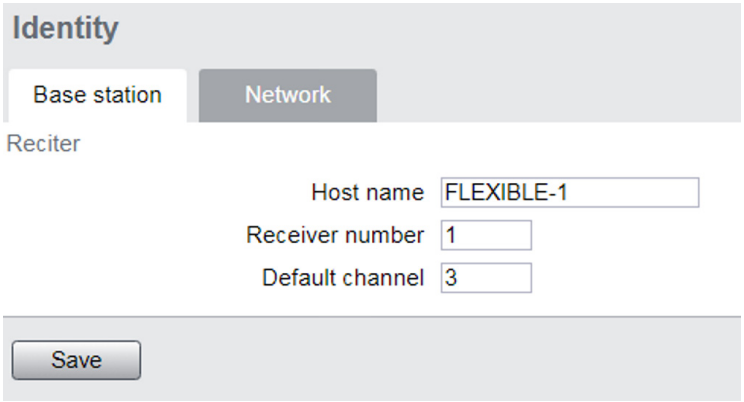
Identity
Base station
Network
Reciter
Host name
FLEXIBLE-1
Receiver number
1
Default channel
3
Save

4.4 Basic Tasks

4.4.1 User Settings

Click on your user name in the top right corner of the page to change your password. Note that this information is stored in the base station, not in your browser.

4.4.2 Taking the Base Station Offline

You may need to take the base station offline in order to carry out diagnostic tests or to take it out of service if a fault develops.

1. Click Mode on the status bar (or Select Tools > Tools > Base Station).
2. Under Control, select Offline. Click Offline to confirm the change. In the Status area, the Mode display changes first to `Changing`, and then to `Offline` (⏏).

4.4.3 Troubleshooting Alarms

If the Alarm status on the status bar displays red, one or more alarms have been triggered, and the Alarms menu automatically expands to display the alarm(s). Click Help and navigate to the description of that alarm.

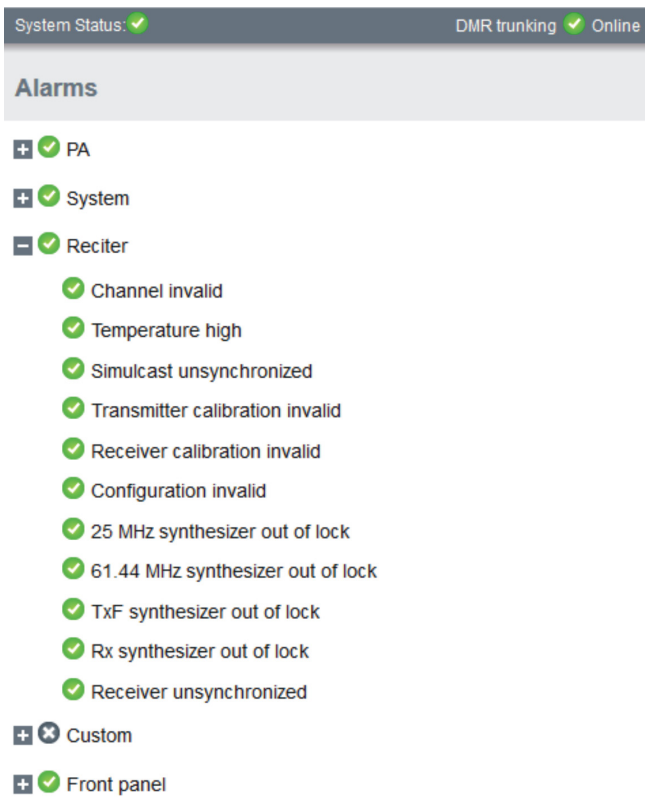

© Tait International Limited April 2021

4.4.4 Working with Configuration Files

Channels

To see all channels associated with both P25/AS-IP and DMR/MPT, go to Configure > Base Station > Channels.

To make them easily recognizable, the licenses within this table are prefixed with their specific software application (P25/AS-IP or DMR/MPT).

ⓘ If you attempt to go online with a channel that is invalid for the software application you are currently using, an alarm will activate (Monitor > Alarms). The alarm will warn you that the channel you are attempting to use will not function.

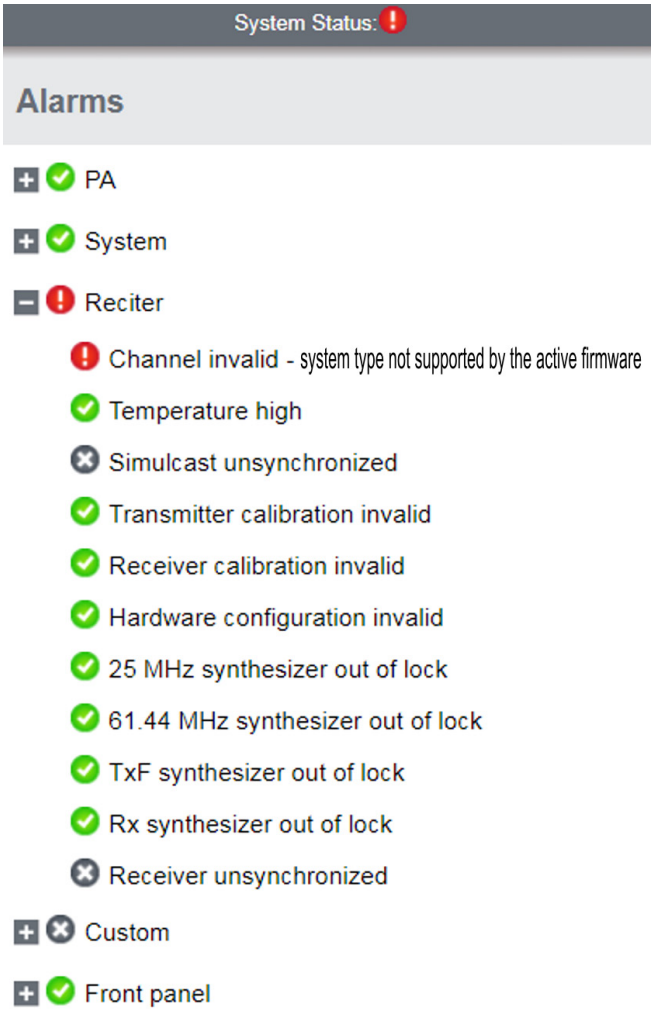

Transferring Files

Specific software application configurations can be transferred between base stations without overwriting identity information.

Configuration

It is important to note that configuration items such as the 'Network Access Code (NAC)', (air-interface specific to the P25 channel) may not be visible on the Web UI when running its software application equivalent. However, its configuration is still preserved in the database.

> Channels specific to analog, P25, DMR or MPT operation may not be usable by their equivalent application, but they remain in the channel table and can be edited if required.

At any time, you can save the current configuration settings as a file (Tools > Files > Configuration > Backup configuration). This is stored in the base station, but we recommend that you download it and store it on your computer as an off-site backup. The base station identity and network identity are not saved as part of the configuration file.

The following parameters are not restored on a base station when a configuration is restored:

- Keypad enabled
- Trunking capability
- Trunking control channel priority
- Host name
- Default channel
- Operating mode
- Front panel text lines 1 through 4
- IP address
- Subnet mask
- Gateway address
- Link speed
- SSH enable

You may want to develop a master configuration and upload it to all base stations in the network. The master configuration can contain all the different channel configurations and can be common to all base stations. The base station identity selects the default channel.

> Base stations are shipped with a set of factory default configurations featuring examples of channel setups for analog FM, P25, DMR and MPT. These configurations provide a safe set of values.

© Tait International Limited April 2021

Tait recommends that you download these configurations and store them on your PC as a backup before altering and saving any of your own configuration settings.

You can also generate a report containing all the base station's configuration settings relevant to the current application software (Tools > Files > Configuration > Configuration report), which can be saved as a text file. We recommend that you do this when the base station is commissioned. This report can be useful later if there is a problem with the base station. Comparing the original report with the later one may highlight changes in configuration that are causing a problem.

4.4.5 Single or Channel Group Base Stations

Base stations can operate singly, or as part of a simulcast or voted channel group. Channel group operation is enabled in the channel group profile: (Configure > Channel Group > [*name*]), and the channel group that is in-use is selected in the channel table (Configure > Base Station > Channels > [*name*]). To disable channel group operation, deselect the 'enable' check-box in the profile referenced by the channel. For more details, see the DMR Simulcast and Voted Channel system manual.

4.4.6 Marshaling or Transmit Delay

As an IP connected base station, transmitters must buffer the signal to be transmitted so that variations in delay in the IP network do not cause the transmitter to underrun.

Non-simulcast channels use a configurable transmit delay. The amount of transmit delay required varies with the QoS (specifically jitter) of the IP transmission network.

Transmitters in a simulcast channel must all begin transmitting simultaneously, therefore the configured value of the marshaling duration must allow for the worst case network delay, including delay variation (jitter).

© Tait International Limited April 2021

The table below provides a summary of where to configure transmit or marshaling delay:

Channel type	Configured value
Single base station, P25 (Phase 1)	Configure > Channel Group > Channel group [name] > Unsynchronized - local Tx delay
Single base station, AS-IP	Configure > Channel Group > Channel group [name] > Unsynchronized - local Tx delay
Simulcast channel, P25 (Phase 1)	Configure > Channel Group [name] > Synchronized – network > Fixed duration
Non-simulcast voted channel, P25 (Phase 1)	Configure > Channel Group [name] > Unsynchronized local Tx delay
Single base station, DMR (trunked, conventional)	Configure > Network Interfaces > DMR Network
Single base station, MPT	Configure > Network Interfaces > MPT Network
Simulcast channel, DMR (trunked, conventional)	Configure > Channel Group [name] > Synchronized – network > Fixed duration
Non simulcast voted channel, DMR (trunked, conventional)	Configure > Channel Group [name] > Unsynchronized local Tx delay

For more information about configuring transmit or marshaling delay, please see the base station help.

4.4.7 Configuring Receive-Only Base Stations

To configure the base station as receive-only, the transmitter used within the channel profiles needs to be off. To turn off the transmitter, navigate to Configure > RF Interface > Channel Profiles.

4.4.8 Setting Up Custom Alarms

Each of the base station's 12 digital inputs can be used to raise a custom alarm when the input goes high or low. The Custom Alarms form (Configure > Alarms > Custom Alarms) allows you to assign a name to each custom alarm.

The active state of the inputs (active high vs. active low) is configured on (Configure > Base Station > Programmable I/O)

Custom alarms are reported via the web interface and SNMP traps.

© Tait International Limited April 2021

Custom alarms provide a warning when an external event activates a digital input. You can rename any of the available alarms to provide a more meaningful name, such as “Door open”.

Take care when setting the severity of alarms, including custom alarms (Configure > Alarms > Severity). Setting an alarm’s severity to Major will cause the node to take the base station out of service when the alarm is raised. Refer to the Help for more information.

4.4.9 Updating Firmware

The base station supports two methods of updating base station firmware. The Web UI page Tools > Firmware > Download allows you to upload base station firmware directly from your PC to the base station, or download firmware files to the base station from a web server.

Uploading firmware is covered in 4.4.10 Firmware upload

Downloading firmware is covered in 4.4.11 Downloading Firmware from a Package Server

Before uploading or downloading

Back up your data off the base station. If the activate process fails, there could be a risk of the configuration database being corrupted. Give the backup file a user-friendly name (incorporating, for example, the site ID, date and time) so it can readily be identified.

If the base station has two firmware packages displayed on the Tools > Firmware > Activate page, the update will replace the inactive package.

Reciter hardware

Beginning with firmware release 3.10, there are two different reciter series, which have different executable files. You can find out the reciter series, 1 or 2, on the Web UI Monitor > Modules > Module details page. Firmware files for Series 1 & 2 hardware have different file extensions. The differences are summarized in the tables below.

File locations

By default, the Windows installer places firmware files in the following location:

```
C:\Program Files (x86)\Tait Applications
```

For Linux computers, firmware is supplied in Zip files with the structure described here. Install in a directory of your choice.

Reciter Series 2
files and extensions

		Direct Upload		
Release	**Application**	**Folder**	**Files**[a]	**Choose Firmware from**
3.10 and later	P25/AS-IP DMR/MPT	BaseStation\feeds	p25-bin-n.nn.nn.nnnn.**p25.tbc02** dmr-bin-n.nn.nn.nnnn.**dmr.tbc02**	BaseStation

a. File extensions differ between Series 1 & 2 files. When you [Upload] a file, the base station chooses a file extension filter that reflects your hardware and the selected firmware type.

Reciter Series 1
files and extensions

		Direct Upload		
Release	**Application**	**Folder**	**Files**[a,b]	**Choose Firmware from**
3.10 and later	P25/AS-IP DMR/MPT	BaseStation\feeds	p25-bin-n.nn.nn.nnnn.**p25.tbc** dmr-bin-n.nn.nn.nnnn.**dmr.tbc**	BaseStation
3.05 .. 3.09	P25/AS-IP DMR/MPT	BaseStation\feeds	p25-bin-n.nn.nn.nnnn.**tbc** dmr-bin-n.nn.nn.nnnn.**tbc**	BaseStation
3.00, 2.60	P25/AS-IP	TB9400\feeds	p25-bin-n.nn.nn.nnnn.**tbc**	TB9400
3.00, 2.60	DMR/MPT	TB9300\feeds	dmr-bin-n.nn.nn.nnnn.**tbc**	TB9300
pre - 2.60	TB9400	TB9400\feeds	p25-bin-n.nn.nn.nnnn.**tbc**	TB9400
pre - 2.60	TB9300, TB7300	TB9300\feeds	dmr-bin-n.nn.nn.nnnn.**tbc**	TB9300

a. File extensions differ between Series 1 & 2 files. When you [Upload] a file, the base station chooses a file extension filter that reflects your hardware and the selected firmware type.
b. The file extension for Series 1 binaries changes in version 3.10. If upgrading from older releases, choose ‘All Files (*.*)’ in the [Upload] file picker dialog.

4.4.10 Firmware upload

The Upload button allows you to select a file to upload from your computer or network location.

© Tait International Limited April 2021

4.4.11 Downloading Firmware from a Package Server

See 4.4.9 Updating Firmware for information about file locations and extensions.

While Tait recommends uploading firmware directly from the base station, the base station supports downloading firmware files from a package server (web server). Base station firmware files include a freeware web server package, Mongoose, that is set up to allow base stations to directly download firmware files from your computer.

Notice The version of Mongoose that Tait ships has a known security issue (CVE-2017-11567) that makes Mongoose unsuitable for use on the public Internet. For more information, please see the base station help.

4.4.12 Activating New Firmware

Activating firmware causes the base station to reboot, and then start back up in offline mode. The base station will then have to be manually put back online.

The Web UI page Tools > Firmware > Activate allows you to review the two software packages stored on the base station and activate the one that is presently inactive.

The base station can remain online while doing upload or download, minimizing any outage time for activation.

Two packages allows separation of the upload or download from the activation itself. Minimizing the outage time when upgrading the firmware.

After activation, the inactive firmware allows you to quickly revert to the previous version should you choose to.

Application Packages

The TB7300 can store two complete application packages in two distinct slots, one of which is active at any time. This is useful for switching between software applications (e.g. P25/AS-IP to DMR/MPT).

You can switch between the two at any time, and run the other. However, there are certain functions associated with each application that are only possible when running that specific software. For more information, please see the base station help.

Appropriate licenses are required for either mode of operation (P25/AS-IP and DMR/MPT).

4.4.13 Switching Application Packages

To switch between one software application package to another, you must first activate the software in the inactive slot. Once that software is active, the base station will reboot and the new software will begin running.

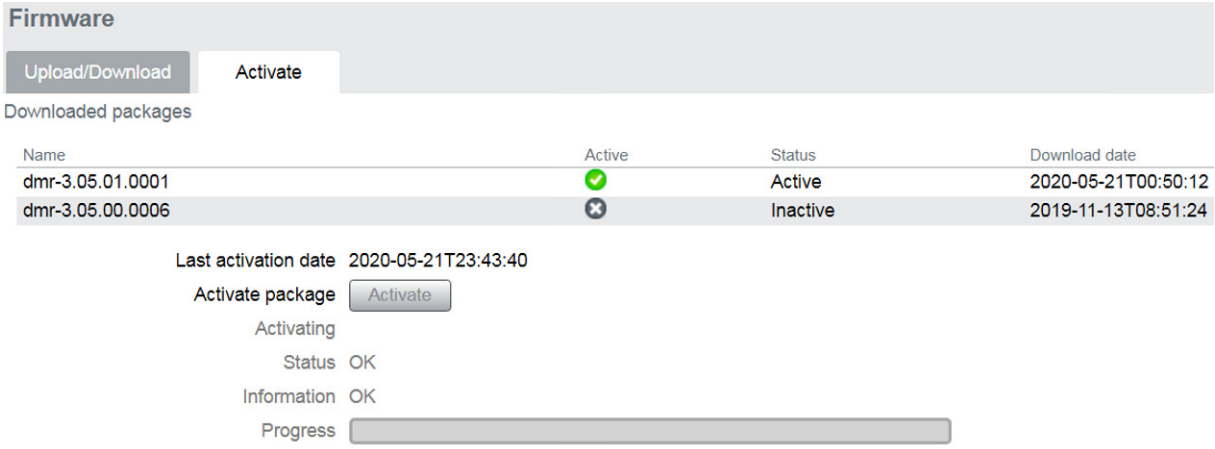

4.4.14 Subaudible Signaling

The purpose of CTCSS and DCS signaling is to reject transmissions from radios that do not belong on the network.

Use of 250.3 Hz and 254.1 Hz CTCSS tones

The receiver has a known issue where reverse tone burst signaling on CTCSS tones CTCSS 250.3 Hz and 254.1 Hz can briefly trigger the other detector. Do not use both tones in the same network. If you use either of them, be aware that there is a risk of falsing if co-channel transmissions are using the other tone.

© Tait International Limited April 2021

4.4.15 SNMP Network Management

Tait base stations provide Management Information Bases (MIBs), to allow network management using SNMP.

The Windows MSI installer includes Tait defined MIBs (look for a folder labeled MIBs under Tait Applications in the Windows Start menu), and they are also published on the Tait Technical support website: **http://support.taitradio.com/home**

The following table summarises the base station MIB files and indicates with hardware and software application they apply to.

The "94Series" MIB applies to P25 and AS/IP operation for TB9400, and TB7300 base stations.

The "93Series" MIB applies to DMR/MPT operation for TB9300 and TB7300 base stations.

File	Hardware	Software	Description
TAIT-COMMON-MIB.mib	TB9400, TB9300, TB7300, transportable	Any	Common declarations for all Tait products
TAIT-INFRA93-94SERIES-COMMON-MIB.mib	TB9400, TB9300, TB7300, transportable	Any	Common declarations for Tait base stations
TAIT-INFRA93-94SERIES-TC-MIB.mib	TB9400, TB9300, TB7300, transportable	Any	Textual conventions: Common type definitions for Tait base stations
TAIT-INFRA94SERIES-TC-MIB.mib	TB9400, TB7300, transportable	P25/AS-IP P25/AS-IP P25/AS-IP	Textual conventions: Type definitions for P25/AS-IP operation
TAIT-INFRA94SERIES-MIB.mib	TB9400, TB7300, transportable	P25/AS-IP P25/AS-IP P25/AS-IP	Monitored object definitions for P25/AS-IP operation
TAIT-INFRA94SERIES-NOTIF-MIB.mib	TB9400, TB7300, transportable	P25/AS-IP P25/AS-IP P25/AS-IP	Trap definitions for P25/AS-IP operation
TAIT-INFRA93SERIES-TC-MIB.mib	TB9300, TB7300, transportable	DMR/MPT DMR/MPT DMR/MPT	Textual conventions: Type definitions for DMR/MPT operation
TAIT-INFRA93SERIES-MIB.mib	TB9300, TB7300, transportable	DMR/MPT DMR/MPT DMR/MPT	Monitored object definitions for DMR/MPT operation
TAIT-INFRA93SERIES-NOTIF-MIB.mib	TB9300, TB7300, transportable	DMR/MPT DMR/MPT DMR/MPT	Trap definitions for DMR/MPT operation

© Tait International Limited April 2021

5 Installation

This chapter provides information on the site requirements for your TB7300 equipment and also describes how to install the base station in a standard 19 inch rack or cabinet.

If this is your first time installing a TB7300 base station, we recommend that you read the entire chapter before beginning the actual installation.

5.1 Before You Begin

5.1.1 Equipment Security

The security of your base station equipment is a high priority. If the site is not fully secure, the base station should at least be locked in a secure, ventilated cabinet to prevent unauthorized access.

5.1.2 Grounding and Lightning Protection

Electrical Ground

A threaded grounding connector is provided on the rear of the tray for permanent connection to the site protective ground point (refer to for more details). The minimum wire gauge for this connection is 1.35 mm^2/ 16 AWG.

Lightning Ground

It is extremely important for the security of the site and its equipment that you take adequate precautions against lightning strike. Because it is outside the scope of this manual to provide comprehensive information on this subject, we recommend that you conform to your country's standards organization or regulatory body.

© Tait International Limited April 2021

5.1.3 Equipment Ventilation

Always ensure there is adequate ventilation around the base station (refer to "Cabinet and Rack Ventilation" on page 51).

Notice **Do not** operate equipment in a sealed cabinet. The ambient temperature **must** stay within the specified range. We recommend **strongly** that you ensure the cooling airflow is not restricted.

Notice The cooling fans are mounted behind the front panel. To ensure adequate airflow through the base station, do not operate it for more than a few minutes with the fans disconnected (such as when the base station is being serviced).

5.1.4 Ambient Temperature Sensor

The ambient temperature reading for the base station is provided by the temperature sensor located inside the chassis.

5.1.5 Cabinet and Rack Ventilation

The cooling airflow for the subrack enters through the front panel and exits at the rear. For optimum thermal performance, the heated air that passes through a base station must never be allowed to re-enter the air-intakes on the front panel. Any space at the front of the cabinet not occupied by equipment should be covered by a blanking panel. See Figure 5.1 on page 52.

Equipment installation should observe the following guidelines:

- The recommended maximum number of subracks in a 38U cabinet is twenty, as illustrated in Figure 5.1 on page 52
- Any space at the front of the cabinet not occupied by equipment should be covered by a blanking panel, refer to Figure 5.1 on page 52
- Subrack placement in the cabinet should include a 2U gap at the top of the cabinet
- To allow enough cooling airflow through a cabinet-mounted base station, the cabinet should allow for 50 cu.ft/min for each subrack (0.024 cu.m/s)
- To ensure adequate ventilation, the cabinet should have a vent at the top with an area of approximately 23in² (150cm²) per subrack, or a similar area of ventilation at the rear of the cabinet behind each subrack
- The maximum ambient temperature at the base station front panels must not exceed +140°F (+60°C).

© Tait International Limited April 2021

Figure 5.1 Typical cabinet ventilation requirements

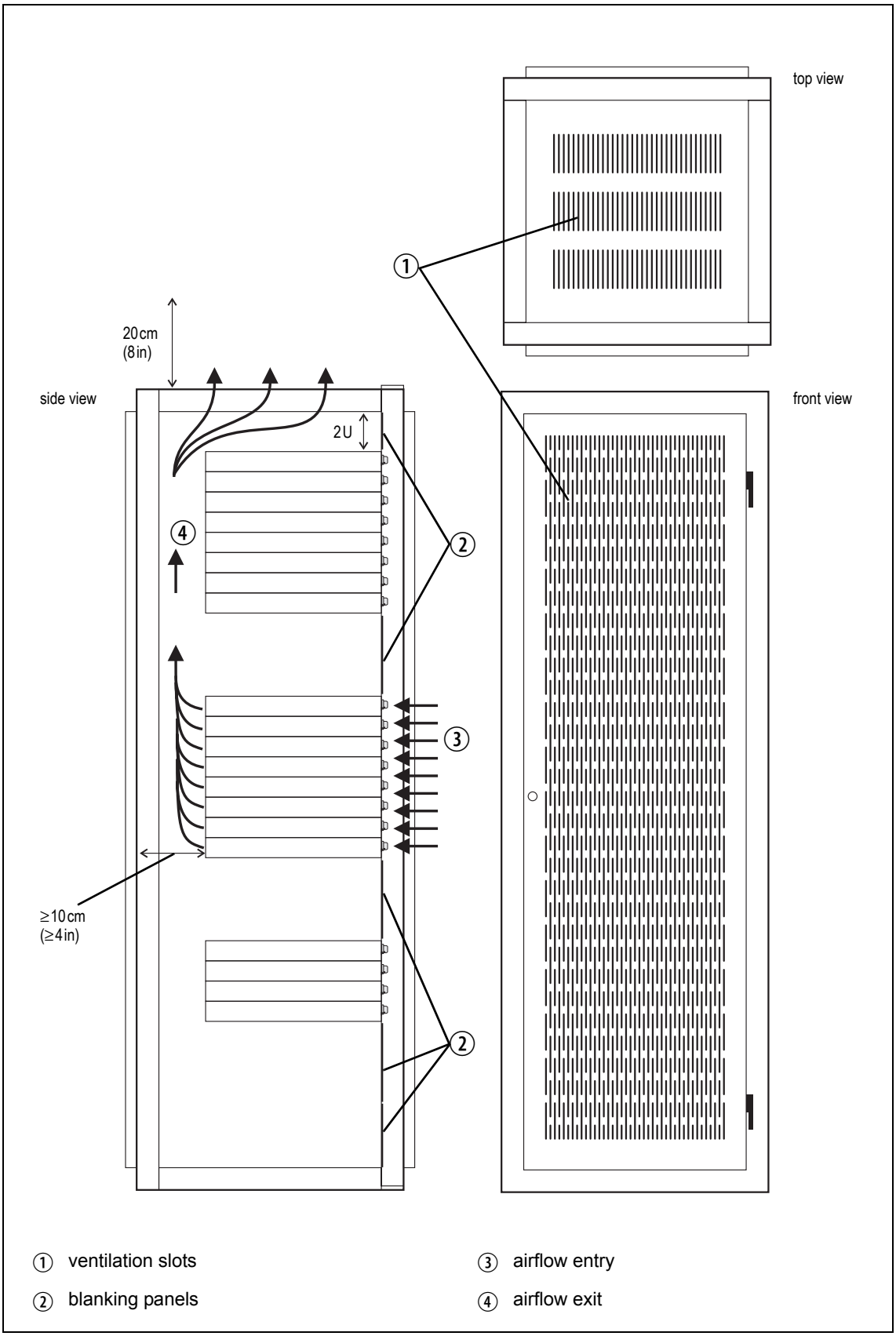

© Tait International Limited April 2021

5.2 Unpacking the Equipment

Unpacking the Base Station

The base station is packed in a strong corrugated cardboard carton with top and bottom cushions.

1. Cut the tape securing the flaps at the top of the carton and fold them flat against the sides.
2. Rotate the carton carefully onto its side and then onto its top, ensuring that none of the flaps are trapped underneath.
3. Slide the carton upwards over the cushions and lift it away. Remove the cushion from the bottom of the base station.
4. Lift the base station clear of the remaining cushion.

Disposal of Packaging

If you do not need to keep the packaging, we recommend that you recycle it according to local recycling methods. The cushions are CFC- and HCFC-free and may be burnt in a suitable waste-to-energy combustion facility, or compacted in landfill.

© Tait International Limited April 2021

5.3 Identifying the Equipment

You can identify the model and hardware configuration of the TB7300 by referring to the product code printed on a label at the rear of the base station. The meaning of each character in the product code is explained in the table below.

This explanation of product codes is not intended to suggest that any combination of features is necessarily available in any one product. Consult your regional Tait office for more information regarding the availability of specific models and options.

Product Code	Description
TB7310-**XX**XX-XXXX-XXXX-10	DMR/MPT **Frequency Band** B1 = 136 MHz to 174 MHz B3 = 148 MHz to 174 MHz H3 = 470 MHz to 520 MHz H5 = 400 MHz to 470 MHz
TB7360-**XX**XX-XXXX-XXXX-10	P25/AS-IP **Frequency Band** B1 = 136 MHz to 174 MHz B3 = 148 MHz to 174 MHz H5 = 400 MHz to 470 MHz
TB73XX-XX**X**X-XXXX-XXXX-10	B = 40/50 W
TB73XX-XXX**X**-XXXX-XXXX-10	0 = Default
TB73XX-XXXX-**XXXX**-XXXX-10	0 = Default
TB73XX-XXXX-XXXX-**X**XXX-10	0 = 13.8 VDC (nominal) input A = 120 V and 230 VAC input
TB73XX-XXXX-XXXX-X**X**XX-10	0 = Default (no mains cable) 1 - 5 = Mains cable type
TB73XX-XXXX-XXXX-XX**XX**-10	**Feature License** 00 = None [Default: Analog (TBAS301)] AC = DMR Express SFE License with TDMA operation (TBAS302) AD = DMR Access SFE License with TDMA operation (TBAS303) AE = DMR conventional (TBAS304)
TB73XX-XXXX-XXXX-XXXX-**10**	10 = default

© Tait International Limited April 2021

5.4 Initial Setting Up

Before putting the base station into service, you may want to carry out some basic functional testing, configuration, and tuning (if required). This section provides an overview of these procedures:

- Checking that the base station powers up correctly
- Checking the basic functionality of the base station by using the tests available in the web interface
- Customizing the configuration for the intended installation and verifying that the configuration is correct
- Changing the root password
- Tuning the base station, if required

5.4.1 Confirming Operation

Notice The RF output **must** be connected to a suitable attenuator or dummy load. **Do not** remove the load while the PA is transmitting as this may damage the PA output stage.

Applying Power

1. Apply power to the TB7300.
2. Check that the base station powers up correctly:

   All LEDs turn on initially, then the transmit and receive LEDs turn off, leaving the green power LED on, and the red alarm LED flashing. The alarm LED will turn off when the base station has finished its start-up sequence.

Functional Tests

The following table provides an overview of the tests available using the Web UI. Refer to the base station Help for full details of these tests.

Test	Notes	Menu
Receiver operation	Requires a suitable RF source	Diagnose > RF Interface > Receiver
Transmitter operation	Requires connection to the network	Diagnose > RF Interface > Transmitter
Ping	Checks the IP connection to another device with an IP address	Diagnose > Connection > Network
NTP query	Checks if the NTP-based time synchronization is working	

© Tait International Limited April 2021

5.4.2 Working with Configurations

The Web UI page under Tools > Files > Configuration allows you to manage your base station configuration. The base station can store up to 10 configurations internally.

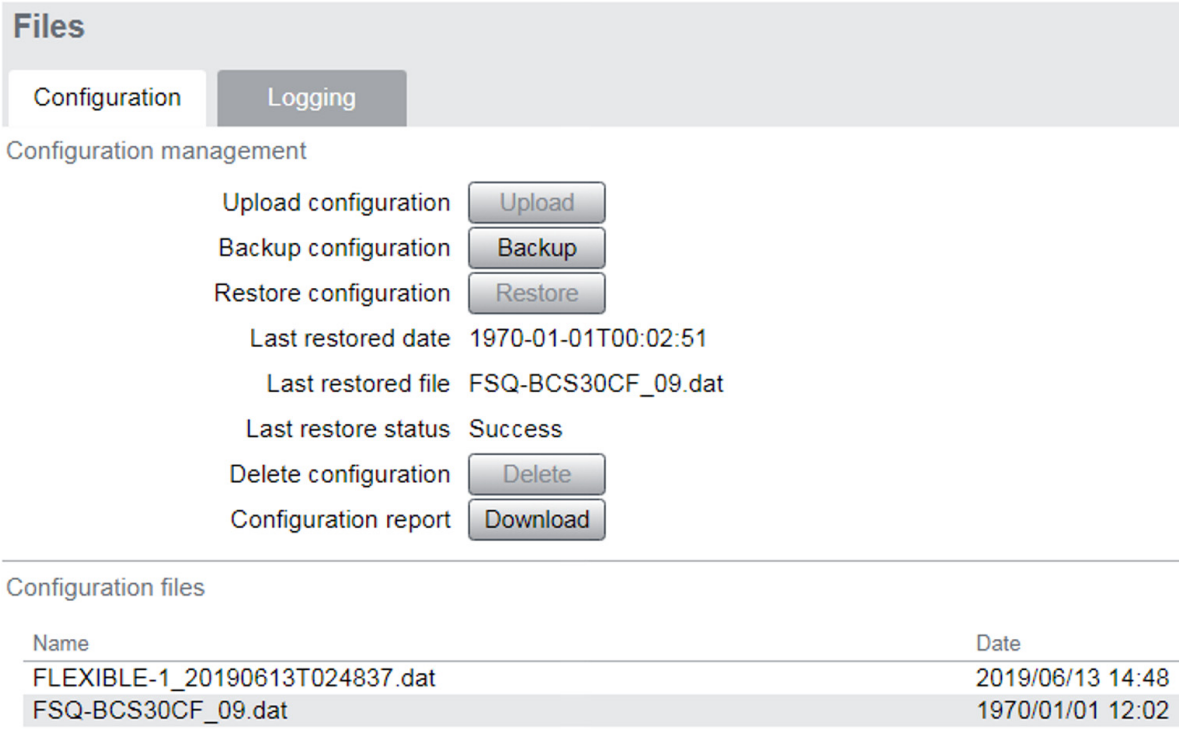

New configurations are created on the base station and uploaded to your PC. They can also be transferred from one base station to another, and can be transferred from one software application to another.

It is important to note that not all configuration values apply to both software applications e.g. DMR/MPT has colour codes, and P25 has NAC values.

When working with base station configurations, you can do the following:

- Back up a configuration: store a snapshot of the base station's current configuration

ⓘ Tait recommends creating a back-up of the current configuration before making significant configuration changes. A backed up configuration is added to the list of stored configurations on the base station.

- Upload a configuration: copy a configuration from your computer to the base station. You can develop a master configuration and upload it to all the base stations in the network. Uploading a configuration adds to the set of stored configurations but does not make that configuration active.

ⓘ When transferring configuration values between base stations, or from one software application to another, all configuration values are preserved.

© Tait International Limited April 2021

To copy configurations between base stations, you can download the configuration file from the source base station, then upload and restore this to a new base station.

Notice Before you restore the base station configuration, you must put the base station 'Offline'. If the base station is not offline, restore does not work.

- Restore a configuration: makes the selected configuration active
- Download a configuration: copy the selected configuration to your computer so that you can store it. To download a configuration file, click on the name of the saved configuration in the list of saved configurations.
- Create a human readable configuration report: download and save a text report of the base station's configuration settings. You can use it to capture, view, review, and compare configurations.

It is safe to restore configurations created under different base station software versions than the one currently operating. When restoring a configuration from an old version that does not contain values defined for all configurations parameters, any absent data values are set to the default.

The following parameters are not over-written when restoring a configuration from a different base station:

- Keypad enabled
- Secure shell (SSH) console access enabled
- Receiver number
- Host name
- Default channel
- Operating mode
- Front panel text lines 1 through 4
- IP address
- Subnet mask
- Gateway address
- Link speed

5.4.3 Customizing the Configuration

The following steps provide an overview of the process used to configure the base station with the settings it needs. Refer to the Help for more detailed information.

1. Log in to the base station (refer to "Connecting Your PC to the Base Station" on page 31 for more details).

2. Select 'Configure.' The base station has many different settings that can be configured before it is put into operation, such as:
   - Channel configurations
   - Alarm control and SNMP agent
   - Network interfaces
   - Quality of service
   - CWID
   - Miscellaneous items such as minimum battery voltages, fan control, NTP and package servers.

3. Make the changes needed in each form and click, **'Save.'** All changes made in the form will only be applied when the form is saved.

Notice Before making changes, you should save the configuration to your PC or network; this provides a baseline which can be restored to the base station if the configuration information becomes lost or corrupted.
You should also back up the configuration before downgrading to a different software release. Note that if you downgrade and then upgrade software, configuration values for new features will generally disable the feature.

Default Configuration Parameters

The base station is delivered from the factory with a saved configuration containing factory defaults. The configuration is named something like `QBCS20CF_11.dat`.

The default configuration file is associated with both P25/AS-IP and DMR/MPT and serves as a starting point for when you need to create your own tailored configuration.

Base stations from the factory all have the same default configuration file. As a result, some settings will not be correct for your network. Frequency plan and alarm settings are examples.

For further information, please contact your local Tait dealer.

© Tait International Limited April 2021

5.4.4 Restricted Port Numbers

Certain configuration settings in the base station's web interface require you to enter a port number (for example, the trunking interface).

The following two ranges of port numbers are unavailable for use with the base station:

Restricted Port Numbers	Details
0 – 1023	The "well-known ports", commonly used by other devices in a network. Using a port number in this range could cause compatibility problems with other devices.
12000 – 14999	Reserved for internal use in the base station. Using a port number in this range could cause the base station to malfunction.

5.4.5 Changing the Root Password

Notice The following procedure can be carried out only if secure shell access (SSH) is enabled. Secure shell access to the base station is disabled by default from version 1.35 onwards. To enable SSH, select Tools > Settings > Secure shell and click '**Start**'. Tait does not recommend disabling SSH after it's been enabled at the end of the procedure.

The root password to the Linux operating system of the base station is a possible security risk. The equipment is delivered with a default password that is well known. Knowledge of the password could be used to render the equipment inoperable, for example, by deleting files. If you are concerned about the security risk that this poses, change the password. If Tait provides support services, they will likely need to know the password.

Notice If you change the password and then lose it, the equipment must be returned to Tait. Make sure that you store the password securely and do not lose it.

To change the root password, follow these steps:

1. Log in from your PC to the base station using SSH client software such as PuTTY. The username is `root` and the default password is `k1w1`.
2. At the # prompt, enter the command **`passwd`**.
3. Follow the on-screen instructions.
4. Record the password in a secure location.

Tait networks are deployed with default weak passwords. For the sake of security, Tait **strongly** recommends changing the default password where applicable.

5.4.6 Tuning the Receiver

In a TB7300 base station, no manual adjustment is required to tune the B1, H3 or H5 bands.

Before the base station is installed on site, you may need to tune the receiver front end. The receiver front end requires tuning if the receive frequency is shifted more than 2 MHz away from the previously set frequency, or the RSSI level of the new frequency is more than 1 dB lower than the RSSI level of the previously set frequency.

The following table indicates which bands require manual tuning, and which bands are electronically tuned:

Band	Manual	Electronic
B1	✗	✓
B3	✓	✗
H3	✗	✓
H5	✗	✓

B3 Band Manual Tuning

This section provides instructions for tuning the B3 band reciter.

The base station receiver signal level diagnostic (Diagnose > RF Interface > Signal Level) offers the ability to verify that the configured receiver frequency aligns with the receiver tuning.

When the frequency sweep is set to “Use calibrated noise source”, the resulting curve represents the receiver front end response, and provides a quick visual check of whether the receiver is optimally tuned. A well tuned receiver should have the maximum response at the operating frequency. See the online help for more details.

The B3 receiver covers the frequency range: 148 to 174 MHz

The B3 band is split into two sub-bands:

- 148 to 159 MHz
- 159 to 174 MHz

Each sub-band has its own helical filter (shown in Figure 5.2 below) which is electronically switched in or out of circuit depending on the frequency programmed into the base station. The bandwidth of these helical filters is approximately ±1.5 MHz.

© Tait International Limited April 2021

Figure 5.2 Identifying the B-band receiver front end helical filters

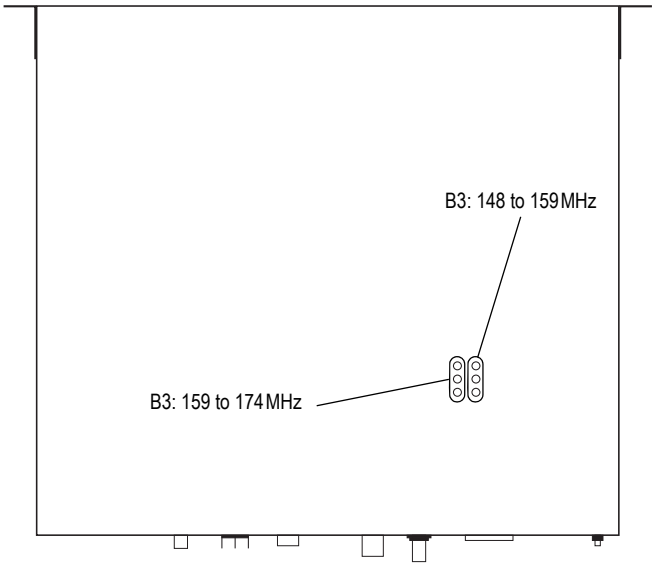

To check the RSSI level and tune the receiver front end (if required), follow these steps:

1. Place the base station on its side or upside down to allow access to the holes on the base to tune the helical filters.

2. Log in to the TB7300 and select Monitor > Interfaces > RF Interface. For information on connecting directly to the base station, refer to "Local Connection to a Base Station" on page 32.

3. Feed a signal at the currently tuned receive frequency and at a level of –80 dBm into the RF input. Check that the RSSI reading on the RF Interface page is –80 dBm ± 1 dB.

4. Set the TB7300 to the new receive frequency.

5. Change the RF input signal to the new receive frequency at –80 dBm. Check that the RSSI reading is –80 dBm ± 1 dB. If it is, the receiver front end does not require tuning. If it is not, go to the next step.

6. Using the Johanson tuning tool[1], adjust the correct helical filter for the new frequency (as shown in Figure 5.2) to obtain a peak RSSI reading. This reading should be within 1 dB of the reading at the previous frequency.

   Adjust the center resonator of the filter first, followed by the two outer resonators (in any order). Each resonator should require approximately the same amount of adjustment when tuning.

1. Included in the TBA0ST2 tool kit. Also available separately as part number 937-00013-00.

A change in frequency of 5 MHz requires approximately one turn of the tuning slug. If tuning to a lower frequency, turn the slug clockwise; for a higher frequency, turn the slug anti-clockwise.

7. Change the RF input signal and the receive frequency to 0.5 MHz above and below the required frequency and check that the RSSI reading does not drop by more than 0.5 dB from the reading at the required frequency.

8. Recalibrate the RSSI at the new frequency (Calibrate > Calibrate > RSSI).

If you wish to confirm the accuracy of the tuning procedure, carry out a sensitivity measurement at the new frequency.

5.5 Installing the Base Station on Site

5.5.1 Base Stations for Trunked Systems

When installing base stations that are part of a trunked system, it is important to observe good site engineering rules. This is especially true when the channels are combined into a single antenna.

If possible, the RF planner should avoid frequency plans in which the Rx to Tx spacing is an exact multiple of the trunked channel spacing, thus forcing Tx intermodulation products to fall outside the Rx channels.

Cables and antennas should be of high quality. Solid shield heliax cables are best, but if braided shield cables must be used for short distances, their braids must be silver-plated. Isolators **must** be used at all transmitter outputs.

When the outputs of more than one transmitter are combined, their voltages add, and the resulting peak envelope power is not simply the sum of their powers, but is equal to the power of one of them multiplied by the square of the number of sources. Cables, components, and hardware must be rated to withstand the peak envelope power.

During the commissioning process, all transmitters should be activated together using a diagnostic test tone, while the receiver RSSI is monitored. There should be no discernible increase in RSSI while the transmitters are active.

© Tait International Limited April 2021

5.5.2 Equipment Required

It is beyond the manual's scope to list everything required. However, the following tools and equipment are specifically required for installing the base station.

Tools

- Philips #2 tip screwdriver used to connect the DC power cables to the DC power terminals
- Pozidriv PZ3 screwdriver for the M6 screws used to secure the tray to the cabinet in Tait factory-assembled systems
- 8 mm spanner for the M5 nut on the ground connector

You can also obtain the **TBA0ST2** tool kit from your regional Tait office. It contains the basic tools needed to install, tune, and service the base station.

Base Station Calibration Test Unit & Cable

The Base Station Calibration Test Unit supports test and diagnosis. It is available for order under **TBA0STU**. It contains a breakout box, tone source and speaker.

5.6 Mounting the Base Station

1. Fit the base station into the cabinet or rack and secure it firmly with an M6 (or 0.25 in if using the imperial system) screw, flat and spring washer in each of the four main mounting holes ①, as shown in Figure 5.3 on page 64.

2. The base station can be wall-mounted by rotating the front mounting brackets and fitting the optional rear brackets (TBBA03-01). When the base station is wall-mounted ensure the airflow is from bottom to top (front panel mounted down) or side to side.

3. For transport or in installations subject to vibration, the base station should be supported at the rear using a transit bracket (Tait recommends using the TBBA03-04 transit bracket).

© Tait International Limited April 2021

Figure 5.3 Base station mounting points

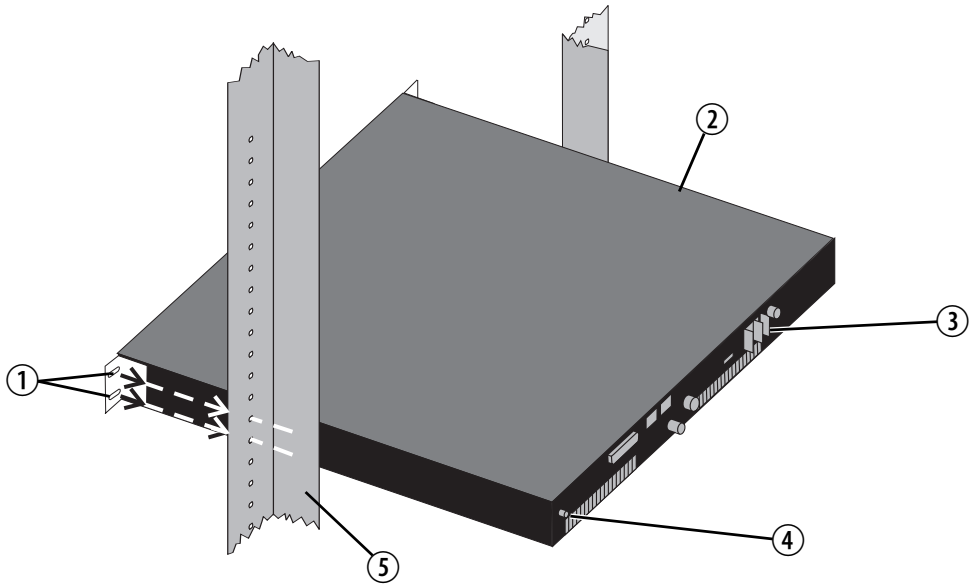

① main mounting holes
② base station
③ DC power connector
④ ground point
⑤ rack frame

Cabling

Tait recommends you route all cables to and from the base station along the side of the cabinet so the cooling airflow is not restricted.

Cables should be well supported so that the connectors or terminals on the base station and on the ends of the cables do not have to support the full weight of the cables.

Cables must be routed so that they do not restrict the air outlets at the rear of the base station.

5.6.1 Mounting and Support Kits

For TB7300 mounted and support operation, Tait offers the following kits for order:

Item Number	Item	Description
TBD-SP-0002	TB7300 Wall Mounting Kit	Wall-mounting option with brackets that attach to the rear of the chassis
TBD-SP-0003	TB7300 Rear Support Bracket Kit	Provides additional support when the base station is mounted in a rack

© Tait International Limited April 2021

5.7 Connecting the Base Station

This section provides information relevant to the task of connecting up the various inputs and outputs of the base station.

5.7.1 Connection Overview

External connections are all located at the rear of the base station. See Figure 5.4 for DC variants and Figure 5.5 for AC variants.

Figure 5.4 Base station (DC variant) inputs and outputs

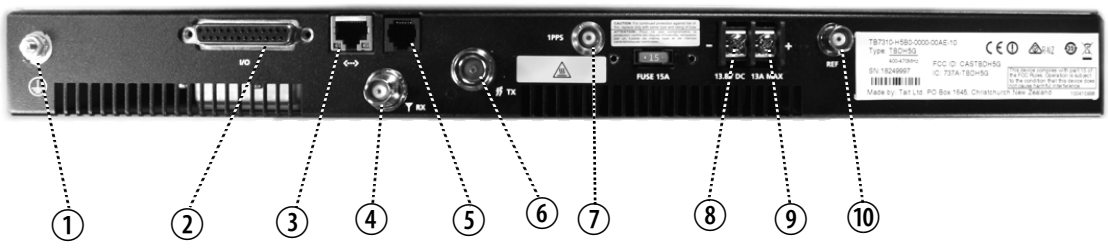

① ground connector

② system interface connector

③ Ethernet interface connector

④ RF input

⑤ serial RS-232 connector

⑥ RF output

⑦ 1PPS input connector

⑧ -VDC input

⑨ +VDC input

⑩ External reference input

Figure 5.5 Base station (AC variant) inputs and outputs

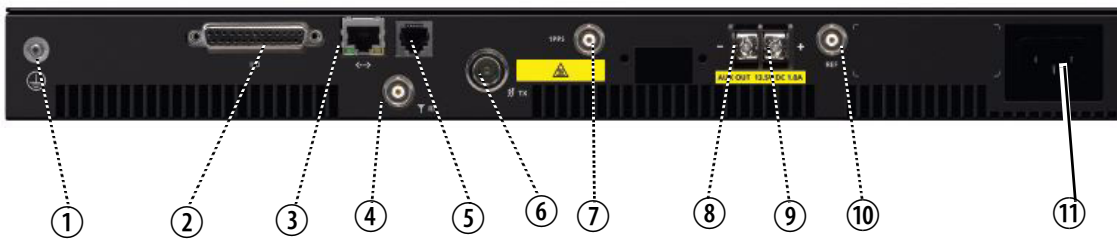

① ground connector

② system interface connector

③ Ethernet interface connector

④ RF input

⑤ serial RS-232 connector

⑥ RF output

⑦ 1PPS input connector

⑧ -VDC auxiliary supply output, 13.5 V DC @ 1 amp

⑨ +VDC

⑩ External reference input

⑪ AC mains input (IEC connector)

5.7.2 Connecting DC Power (12V DC variant)

The base station is designed to accept a nominal 13.8 V DC, with negative ground.

Notice Any mains power supply used to power the base station is required to meet the isolation separation for reinforced insulation of 3000 Vrms or 4242 VDC.

The DC power connector at the rear of the base station is a heavy-duty M4 screw terminal connector suitable for many forms of connection.

Notice For AC powered base stations, this is an auxiliary supply output, 13.5 V DC at 1.0 amps.

Pin	Signal Name	Signal Type	Notes	External View
1	ground	input	The maximum current for each band: ■ B band: 50 W 9.6 A Typical ■ H band: 40 W 8.1 A Typical	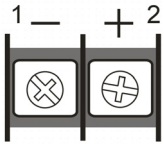
2	13.8 VDC	input		

You must connect the DC supply from the battery to the base station via a readily accessible disconnect device such as a fuse or DC-rated circuit breaker with the appropriate rating, as shown in the table below.

© Tait International Limited April 2021

The DC input leads should be of a suitable gauge to ensure no more than a 3% voltage drop (0.4V @ 13.8V) at maximum load over the required length of lead. Note the maximum conductor size for the screw connector is 4mm² or 12AWG.

Nominal Supply Voltage	Input Voltage Range	Circuit Breaker/ Fuse Rating	Recommended Wire Gauge[a]
13.8VDC	11.8VDC to 16.0VDC	20A	12AWG / 3.3mm[a]

a. For a length of 4.5m (14.5ft) (typical) at maximum rated power.

Terminate the DC input leads with a suitable crimp connector for attaching to the M4 screws of the DC power connector.

5.7.3 Connecting AC Power

The AC power input is universal and will run from either 120V or 230V AC (nominal) 50/60Hz.

Power is supplied via the IEC connector at the rear.

On the AC base station, connectors ⑧ and ⑨ (Figure 5.5) are current-limited outputs for power auxiliary equipment, 13.5V at 1A.

© Tait International Limited April 2021

5.7.4 Connecting RF

Notice **Do not** remove the load from the base station while it is transmitting as this may damage the PA output stage. Before disconnecting RF cables, put the base station into 'Offline' mode to prevent any transmissions.

The RF input to the base station is via the marked BNC connector on the rear panel. The RF output is via the N-type connector on the rear panel (refer to Figure 5.5 on page 66).

Cables and antennas should be of high quality. Solid shield heliax type cables are best, but if braided shield cables must be used for short distances, their braids must be silver-plated.

Recommendations for Installing the Base Station

We recommend the following installation procedures, which should protect the PA from damage under all but the most extreme operating conditions

1. **Do not** connect the base station directly to the antenna. Fit an isolator or duplexer between the base station and the load. Fit the isolator as close as possible to the RF output connector on the base station. Do not connect any switching equipment between the isolator and the base station, unless the switch **cannot** operate while there is RF present (i.e. the base station is transmitting).
2. Fit a surge suppressor to the antenna cabling where it enters the building.
3. Inspect all cables and equipment connected to the base station for defects.

A broken antenna or ice is unlikely to cause damage to the PA.

Explanation

The circuit design of the PA protects the circuitry from high VSWR. This makes it difficult to damage the RF power device by keying the PA into a mismatched load, or if the load deteriorates over even a short period of time (milliseconds).

However, it is possible to damage the device if **all** the following conditions happen **at the same time**:

- There is a step change in the PA load (for example, the load is removed)
- The PA is transmitting
- The feed line loss between the PA and the mismatch is <1 dB

The effect of such conditions is variable: some devices will not be destroyed, and some may fail after repeated load interruptions.

© Tait International Limited April 2021

5.7.5 Connecting an External Frequency Reference

An external reference frequency is not normally required for B band. However, an external reference can be used when you need to maximize the range of the base station. The external reference frequency can be 10 MHz or 12.8 MHz, with an input level of 300 mV_{pp} to 5 V_{pp}. The stability of this reference should be better than 100 parts per billion. The base station automatically detects the frequency of the external reference and configures itself accordingly.

Notice An external reference is required for simulcast operation.

If an external reference is required, enable the external reference "external reference absent" alarm (Configure > Alarms > Control).

Use a 50 Ω coaxial cable (RG58 or RG223) to connect the external reference to the base station's external reference frequency input. You can daisy-chain up to eight base stations using T-junctions. The maximum overall cable length is 30 m. Terminate the last connection (including single base stations) with a 50 Ω load.

Figure 5.6 Daisy-chaining an external frequency reference input

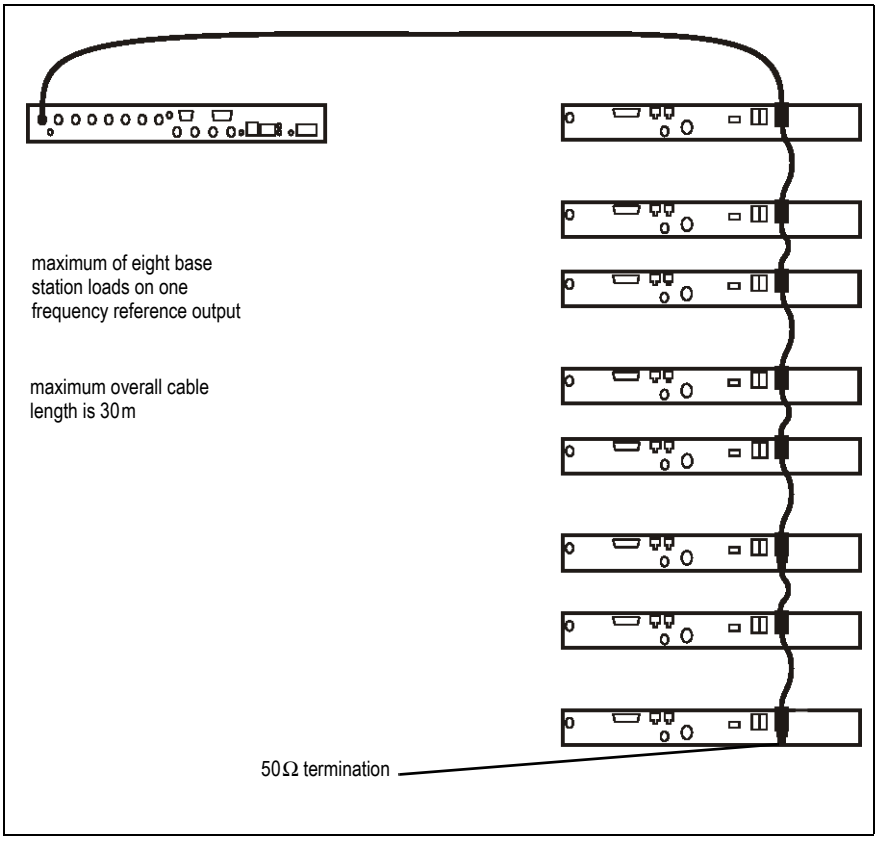

5.7.6 Connecting a 1PPS Source

A 1 PPS signal is required for simulcast base stations. Use a 50 Ω coaxial cable (RG58 or RG223) to connect the source to the base station's 1 PPS input. You can daisy-chain up to eight base stations using T-junctions. We recommend that the cable length between the first and last load is kept to a minimum. This will reduce any propagation variation between base stations. The maximum overall cable length is 30 m. Terminate the last connection with a 50 Ω resistor, otherwise reflections of the 1 PPS pulse may occur.

Notice If 1PPS is used, then 1PPS and NTP must both be derived from the same time base. Normally this will be a GPS disciplined source.

Figure 5.7 Daisy-chaining a 1PPS input

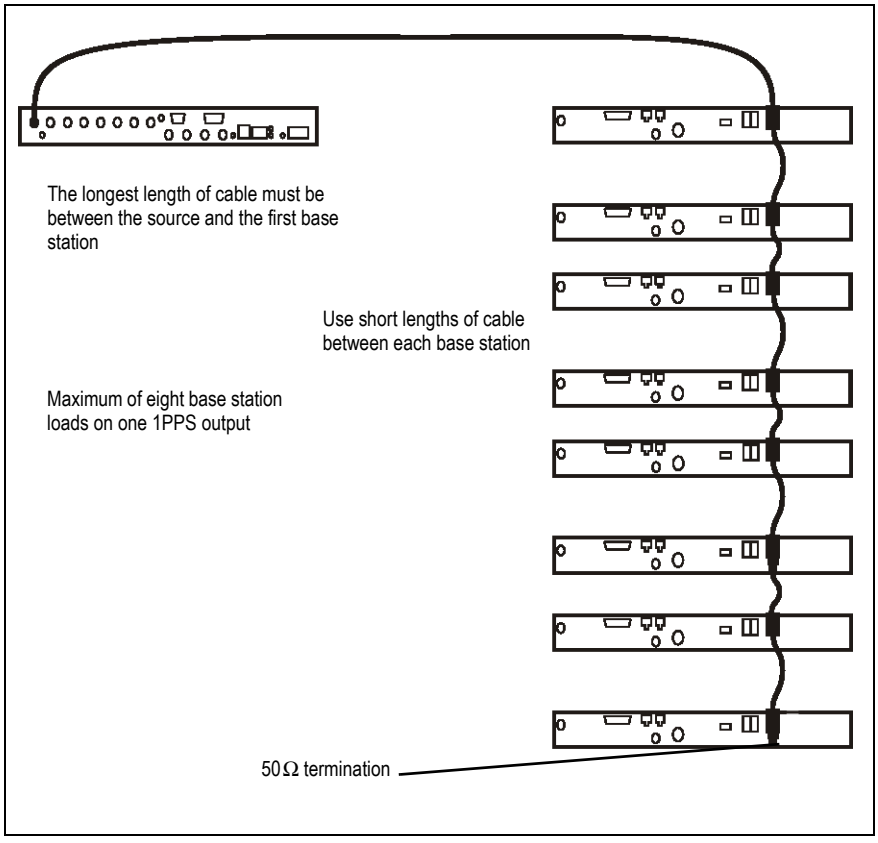

© Tait International Limited April 2021

5.7.7 Ethernet Connection

The RJ-45 socket on the reciter's rear panel provides the 10 BASE-T or 100 BASE-T Ethernet connection to the other devices in the network. Use a Cat-5 cable to connect this socket to the Tait Network via a router or switch.

The Web UI allows you to set the Ethernet port speed auto-negotiation to 10/100 Mbit/s or to negotiate a maximum 10 Mbit/s. Tait recommends that you keep the port speed at the factory default setting of 10 Mbit/s. The reciter hardware and software are scaled to meet the performance requirements of processing multiple voice streams along with supervisory control and management communications. 10 Mbit/s is ample for those requirements. The 10/100 Mbit/s setting is provided for compatibility reasons, but it is possible under high traffic conditions at 100 Mbit/s for traffic arriving at the reciter at the full rate within a small timing window to overflow internal buffers and therefore suffer packet loss. If you set the port speed to 100 Mbit/s and observe QoS lost packet alarms, then review your Ethernet port speed settings.

With the port speed at 10 Mbit/s it is particularly important to set the voice QoS on the reciter port of your site router or switch to a strict priority queue policy - which is the same policy that you should also be setting for your site link ports. The default QoS settings restrict the voice bandwidth to 1/25th of the port speed which is smaller than the required bandwidth for typical systems at 10 Mbit/s.

If necessary, refer to "Ethernet Connector" on page 76 for a list of Ethernet connection pin allocations.

5.7.8 Connecting General Purpose Inputs and Outputs

General purpose inputs and outputs are connected via the DB-25 connector on the rear panel of the base station.

Analog line operation requires reciter hardware version 1.01 or later. Reciters with hardware version 1.0 can be upgraded to version 1.01 at a Tait service centre. Contact your Tait dealer for details.

The pin allocations for the DB-25 connector are given in the following table:

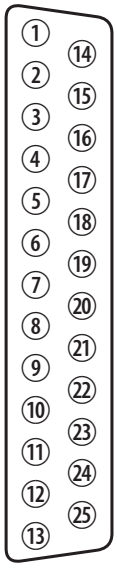

external view

Pin	Signal Name	Signal Type	Notes
1	balanced out +	output	
2	balanced out -		
3			reserved for future use
4			
5			
6	balanced in +	input	
7	balanced in -		
8	RSSI indication	output	
9	Rx gate	output	
10	Tx key	input	
11	digital in 1	input	5V TTL logic active state configurable (active high vs. active low)
12	digital in 2		
13	+5.2VDC output	power output	maximum current 200mA
14	digital in 3	input	5V TTL logic active state configurable
15	digital in 4		
16	digital in 5		
17	digital in 6		
18	digital in 7		
19	digital in 8		
20	digital in 9	isolated keying input	
21	digital in 10 / Rx disable		
22	digital in 11	isolated gate output	
23	digital in 12		
24	simplex	antenna (coax) relay output[a]	
25	ground	ground	

a. Open drain output to drive coax relay for simplex operation.

The existing Tx key and Rx gate signals are sufficient for balanced audio interconnection with connecting equipment compatible with 5V TTL level signaling. Tait also offers an isolation adapter that provides E&M isolated signaling (order number **TBC101A**).

© Tait International Limited April 2021

Tait recommends E&M isolated signaling be used in the following situations:

- Locally connected equipment is not 5V TTL signaling compatible
- There is significant distance between connected equipment, and voltage transients could cause equipment damage

5.7.9 Setting Up Simplex Operation

Simplex operation allows the base station to use one antenna to either transmit or receive, so the base station cannot transmit and receive at the same time. A coaxial relay switches an antenna between base station receive and transmit automatically.

DMR firmware does not support simplex operation.

In single frequency simplex, only one physical radio frequency is used.

Simplex operates in a single base station context and simulcast and non-simulcast channel group operation.

When the base station is transmitting, the receiver is disabled.

Pin 24 in the 25-way D-range is configured as the relay driver.
Refer to Connecting General Purpose Inputs and Outputs for pin-out information.

Warning **Switching the PA output while it is operating can damage the PA. It is essential to use a relay that meets the 30 ms operating time specification.**

Warning **When the base station is in simplex mode using a single antenna with a coaxial changeover relay, the isolation of this relay must be >40dB to avoid damage to the receiver.**

The relay operating time interacts with the base station transmit buffer. Once a transceiver begins receiving a transit stream, it will not begin transmitting that signal until the relay operating time has passed. To avoid any confusion, you must allow at least this much time in the transmit buffer setting (Tx delay for non-simulcast operation, and marshalling duration for simulcast operation).

Tait offers an Antenna Relay Kit which comes complete with installation instructions **(402-00119-01)**.

Configuration

Configure > Base station > Programmable I/O “Antenna relay control” check box.

6 Maintenance

The base station is designed to be very reliable and should require little maintenance. However, performing regular checks will prolong the life of the equipment and prevent problems from happening.

It is beyond the scope of this manual to list every check that you should perform on your base station. The type and frequency of maintenance checks will depend on the location and type of your system. The checks and procedures listed below can be used as a starting point for your maintenance schedule.

Performance Checks

We suggest you monitor the following operational parameters using the web interface:

- VSWR
- DC input voltage, especially on transmit
- Any temperature alarms
- Forward power

These basic checks will provide an overview of how well your base station is operating.

Calibration

We recommend that you calibrate the base station after three months of operation, and then annually for H-band reciters, or and every three years for B-band reciters. The calibration procedure is described in the Help (Calibrate > Calibrate > Internal reference), and requires a calibrated frequency generator - a GPS-derived frequency reference is recommended.

DC Input

We suggest that you periodically check that the screws on the DC input terminals are tightened to the recommended torque of 1.3 lbf · in (1.7 N · m). They may work loose with thermal cycling. Also, if you are using battery back-up, you should check the batteries regularly in accordance with the manufacturer's recommendations.

Ventilation

The base station has been designed to have a front-to-back cooling airflow. We strongly recommend that you periodically check and maintain the ventilation requirements described in "Equipment Ventilation" on page 51 to ensure a long life and trouble-free operation for your base station. Also check for a build-up of dust in and around the front panel air intakes and fan ducts.

Cooling Fans

The cooling fans have a long service life and have no special maintenance requirements.

© Tait International Limited April 2021

7 Troubleshooting

Check that all front and rear connectors and cables are in place, and that power switches are on. If problems persist, contact your regional Tait office.

Notice The TB7300 cannot be serviced in the field. It must be returned to your regional Tait office for repair.

Symptom	Possible Cause	Action
Alarm LED red and steady (not flashing)	The base station is in Offline mode	Use the web interface to put the base station in Online mode
Alarm LED flashing	One or more faults are present	Use the web interface to identify the fault
Power LED off	The rear panel fuse has blown	Check the fuse
	There is a problem with the supply voltage	Check the supply input voltage
Desired feature is not operating	Feature license missing	Check that you have the necessary feature licenses (refer to "Licenses" on page 14 and the Help)
	Feature license present but feature is not enabled	Use the Web UI to enable the feature
Tx stuck on	Tx and Rx frequencies are the same	Reconfigure Tx and Rx with different frequencies
The base station appears to make random transmissions	CWID feature enabled	No action: CWID transmissions are made according to configuration settings
PA has low power	Channel is configured to low power	Use the Web UI to check the power settings
	PA may have suffered partial damage	Return the base station to Tait for replacement

© Tait International Limited April 2021

Appendix A Interface Pin Allocations

System Interface Connector

For the pin allocations for the system interface DB-25 connector, see "Connecting General Purpose Inputs and Outputs" on page 72.

Ethernet Connector

External View	Pin	Description
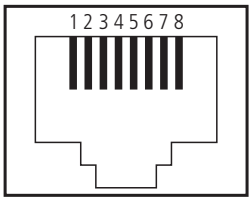	1	transmit data +
	2	transmit data –
	3	receive data +
	4	not connected
	5	not connected
	6	receive data –
	7	not connected
	8	not connected

Serial Connector

External View	Pin	Description
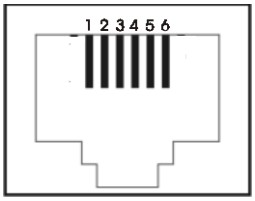	1	5V
	2	TxD out
	3	Not connected
	4	Not connected
	5	GND
	6	RxD in

© Tait International Limited April 2021

Appendix B Installing the Firmware Package

Mongoose Installation Package

The installation procedure copies files into a folder and adds items to the Windows Start menu (Start > Programs > Tait Applications > TB9300[1]). From the Start menu you can then access the Help, licenses, manuals and release notes for each firmware package, and also start Mongoose.

You do not have to install Mongoose to make it work, because it is a self-contained executable file. Once started, it will run in the background until stopped, or the computer is shut down. Mongoose must also run from the same folder as the firmware files.

1. Save the zip file to a suitable location on the hard drive of the package server computer.
2. Extract the zip file, then navigate to the root folder and double-click `TB9300.msi` to run the Windows installer.

Notice Tait recommends that the maximum length of the path to the location of the extracted files is 100 characters. Using a longer path may cause the files to be extracted incorrectly.

Setting Up a Central Package Server

It is beyond the scope of this manual to describe the exact procedure for setting up a central package server for any particular network. Tait expects that each customer will configure their own package server according to the requirements for their network. However, you do need to configure each base station with the IP address and port of the package server computer:

3. Log in to the base station and select Configure > Base Station > Miscellaneous.
4. Under Package server, enter the IP address and port number of the package server.
5. Download the firmware as described in the Help.

If you click ‘Cancel’ while downloading a firmware package, it takes approximately 20 seconds for the cancellation to take effect and for the base station to respond.

1. The TB7300 is designed to use the same firmware and download system as the TB9300.

Setting up a Temporary Package Server

If you want to use a laptop as a temporary package server, you can temporarily override the package server IP address and port in each base station.

1. Run Mongoose on the temporary package server (Start > Programs > Tait Applications > Base Stations > Mongoose).
2. Windows Firewall may raise a Security Alert about allowing Mongoose to access your network or the internet.
   a. In Windows 7 allow access to private networks.
   b. In Windows XP click Unblock.
3. Log in to the base station and select Tools > Firmware > Download.
4. Under Package server, enter the IP address of the laptop. The default port number is 8080.
5. Download the firmware as described in the Help.
6. If you have trouble with any of the above procedures, please consider the following points:
   - The firmware download process uses the HTTP protocol. If you are using a laptop from outside the radio communications network, make sure that HTTP traffic can get through the firewall.
   - If Mongoose fails to start, it may already be running, or another application may be using port 8080.
   - If the error message “Could not find index file” appears when listing packages, Windows security may be silently blocking access for Mongoose. Turn off the laptop’s WiFi and temporarily disable its firewall, then try again.

The base station has enough space for two firmware packages.

© Tait International Limited April 2021

Glossary

This glossary contains an alphabetical list of terms and abbreviations found in this document, related to the TaitNet network and the TB7300 base station.

AMBE+2™
Advanced Multiband Excitation. A voice compression technology patented by Digital Voice Systems, Inc and used in the vocoders of DMR radios.

base station
A radio receiver and transmitter that is located in a specific place (at a site) that enables a two-way radio to communicate with a dispatcher or over a larger range with other two-way radios.

call
A complete exchange of information between two or more parties. A call requires a receive signal path and a transmit signal path. In conventional systems, a call is an over, but in trunked systems, a call may be a conversation, made up of a number of overs.

channel
1. A path through which signals can flow.
2. In the RF domain, a frequency pair (or just a single frequency in a simplex system). Also called a physical channel in this manual.
3. One of the two timeslots that DMR provides for each radio frequency (physical channel). Refer to “logical channel”.
4. A set of configuration information that defines the frequency pair and other related settings (a channel configuration). “Channel” has this meaning in the web interface.

channel spacing
The bandwidth that a channel nominally occupies. If a base station has a channel spacing of 12.5 kHz, there must be a separation of at least 12.5 kHz between its operating frequencies and those of any other equipment.

channel table
The base station’s database of channel configurations.

configuration file
Consists of all the configuration settings needed for a base station, stored as a file.

conventional network
Systems that do not have centralized management of channel access. System operation is entirely controlled by system end users.

CTCSS
CTCSS (continuous tone controlled squelch system), also known as PL (private line), is a type of signaling that uses subaudible tones to segregate groups of users.

© Tait International Limited April 2021

CWID Continuous Wave Identification is a method of automatically identifying the base station using a Morse code. Continuous wave means transmission of a signal with a single frequency that is either on or off, as opposed to a modulated carrier.

DAC Digital-to-Analog Converter. A device for converting a digital signal to an analog signal that represents the same information.

dispatcher A person who gives official instructions by radio to one or more mobile stations.

DMR Digital Mobile Radio. A set of standards and requirements endorsed by ETSI and intended for professional mobile radio (PMR) users.

downlink The transmission path from fixed equipment to mobile stations.

duplex Providing transmission and reception in both directions simultaneously.

duty cycle Used in relation to the PA, it is the proportion of time (expressed as a percentage) during which the PA is transmitting.

EIA Electronic Industries Alliance. Accredited by the American National Standards Institute (ANSI) and responsible for developing telecommunications and electronics standards in the USA.

ETSI European Telecommunications Standards Institute. The non-profit organization responsible for producing European telecommunications standards.

fallback mode An operational mode of Tait DMR and MPT trunked networks. It comes into effect when the base station loses communication with the trunking node controller. In fallback, one base station operates a control channel and allocates calls to the other traffic channels at the site. The base station fallback mode will accept all registrations without requiring authorisation.

FCC Federal Communications Commission. The FCC is an independent United States government agency that regulates interstate and international radio communications.

feature set A function or mode of operation of the base station which can be enabled or disabled using the web interface. Each feature set requires a license to be purchased from Tait before it can be enabled.

feature license key The unique set of digits belonging to a license which is programmed into the base station to enable a feature set.

© Tait International Limited April 2021

flash Electrically block-erasable and programmable read-only memory.

FM Frequency Modulation. Often used as an adjective to denote analog radio transmission.

frequency band The range of frequencies that the equipment is capable of operating on.

group call A call that is sent to more than one MS simultaneously.

host name The unique name by which a network element is known on the network.

hysteresis The difference between the upper and lower trigger points. For example, the receiver unmutes when the upper trigger point is reached, but will mute again until the level falls to the lower trigger point. An adequate hysteresis prevents the receiver gate from repeatedly muting and unmuting when the level varies around the trigger point.

IP Internet Protocol is a protocol for sending data packets between hosts.

isolator A passive two-port device which transmits power in one direction, and absorbs power in the other direction. It is used with a PA to prevent damage to the RF circuitry from high reverse power.

LAN Local Area Network. A computer network that interconnects computers in a limited area, such as a single building or group of buildings.

LED Light Emitting Diode. Also the screen representation of a physical LED.

license Some operational functions of the base station are controlled by licenses. Purchasing a license from Tait allows you to enable the feature set which includes the required functionality.

logical channel One of the two timeslots provided in each TB7300 radio frequency. Each timeslot can function as a separate logical channel, independent of the other timeslot. One radio frequency can therefore carry two separate voice or data streams, one in each timeslot.

mobile station The term used in the ETSI DMR standard documents for a two-way radio (generally a mobile or a portable radio) conforming to the DMR specifications.

network element Any device that is network-connected. A TaitNet digital network consists of a number of network elements. The TB7300 base station is a network element designed and manufactured by Tait.

© Tait International Limited April 2021

NTP Network Time Protocol is a protocol and software implementation for synchronizing the clocks of computer systems across a network. An NTP server obtains the correct time from a time source and sets the local time in each connected computer.

octet A set of 8 bits.

Offline mode A mode of operation in which active service is suspended so that special operations can be carried out, such as programming in a new configuration or carrying out certain diagnostic tests.

Online mode The normal operating mode of the base station.

over A single transmission, which begins when a user presses PTT and ends when the user stops pressing.

PA The Power Amplifier is a base station module that boosts the exciter output to the required transmit level.

PCB Printed Circuit Board.

privileges A set of access rights to the web interface functions. There are Administrator, Maintainer and Monitor privileges.

PSTN Public Switched Telephone Network: the public telephone network.

PTT Push To Talk. The button on an MS that keys the transmitter.

RISC Reduced Instruction Set Computer. A type of microprocessor that recognizes a relatively limited number of instructions. The control board in the TB7300 has a RISC microprocessor.

router A router is an internetwork packet switch that switches data packets from an input interface to an output interface. The interfaces can be of different types.

RS-232 A protocol for serial communications between a DTE (data terminal equipment) and a DCE (data communications equipment) device.

RS-485 An updated version of the RS-232 protocol for serial communications between multiple devices.

© Tait International Limited April 2021

RSSI	Received Signal Strength Indicator is a level that indicates the strength of the received signal.
RTP	Real Time Protocol is an Internet protocol that supports the real-time transmission of voice and data.
Rx	Receiver.
Secure Shell (SSH)	Secure Shell (SSH) is a cryptographic network protocol for operating network services securely over an unsecured network.
Selectivity	The ability of a radio receiver to select the wanted signal and reject unwanted signals on adjacent channels (expressed as a ratio).
sensitivity	The sensitivity of a radio receiver is the minimum input signal strength required to provide a usable signal.
simplex	Able to provide transmission and reception in only one direction at a time.
site	1. The base station equipment at a particular location. This includes power supplies, transmitters, receivers, network interfaces and controllers. 2. The location of that equipment.
SNMP	Simple Network Management Protocol. A protocol used (for example) by the trunking site controller to monitor the base station's parameters and alarm status.
standalone node	The base station itself can act as a DMR trunking controller, but with limited functionality. The base station is then said to be a standalone node.
TaitNet	Brand name for any PMR network designed and manufactured by Tait International Limited.
TaitNet DMR network	A set of Tait base stations and controllers interconnected by an IP network that can carry voice and data traffic.
TB7300 Base Station	A base station consisting of the equipment necessary to receive and transmit on one physical channel in a DMR or analog network. Often abbreviated to TB7300 or base station.
TCP	Transmission Control Protocol. A complex protocol on top of IP for sending reliable streams of data with flow control.

© Tait International Limited April 2021

TDMA	Time Division Multiple Access. In the TB7300 each radio frequency provides two timeslots, with each timeslot representing one logical channel.
toggle	Describes the switching between two states. If something is on, toggling it turns it off. If it is off, toggling it turns it on.
tone	A sound wave of a particular frequency.
Tx	Transmitter.
uplink	The transmission path from mobile stations to fixed equipment.
UTC	Coordinated Universal Time (word order from French). An international time standard that has replaced Greenwich Mean Time.
VDP	Voice Data Protocol. A proprietary protocol operating over IP for the exchange of voice and data between a base station and a trunking node controller.
voice stream	A digitized voice signal that passes through the main switch.
VoIP	Voice over IP. The name for the technology that puts speech signals in packets and then routes them over an IP backbone network.
VPN	Virtual Private Network. A private communications network used to communicate confidentially over a non-private network.
VSWR	Voltage Standing Wave Ratio is the ratio of the maximum peak voltage anywhere on the transmission line to the minimum value anywhere on the transmission line. A perfectly matched line has a VSWR of 1:1. A high ratio indicates that the antenna subsystem is poorly matched.

© Tait International Limited April 2021

Tait General Software License Agreement

This Software License Agreement ("Agreement") is between you (“Licensee”) and Tait International Limited (“Tait").

By using any of the Software items embedded and pre-loaded in the related Tait Designated Product, included on CD, downloaded from the Tait website, or provided in any other form, you agree to be bound by the terms of this Agreement. If you do not agree to the terms of this Agreement, do not install or use any of the Software. If you install or use any of the Software, that will be deemed to be acceptance of the terms of this Agreement.

For good and valuable consideration, the parties agree as follows:

Section 1 DEFINITIONS

“Confidential Information” means all or any information supplied to or received by Licensee from Tait, whether before or after installation or use and whether directly or indirectly pertaining to the Software and Documentation supplied by Tait, including without limitation all information relating to the Designated Products, hardware, software; copyright, design registrations, trademarks; operations, processes, and related business affairs of Tait; and including any other goods or property supplied by Tait to Licensee pursuant to the terms of this Agreement.

“Designated Products” means products provided by Tait to Licensee with which or for which the Software and Documentation is licensed for use.

“Documentation” means product and software documentation that specifies technical and performance features and capabilities; user, operation, and training manuals for the Software; and all physical or electronic media upon which such information is provided.

“Executable Code” means Software in a form that can be run in a computer and typically refers to machine language, which is comprised of native instructions the computer carries out in hardware. Executable code may also refer to programs written in interpreted languages that require additional software to actually execute.

“Intellectual Property Rights” and **“Intellectual Property”** mean the following or their substantial equivalents or counterparts, recognized by or through action before any governmental authority in any jurisdiction throughout the world and including, but not limited to all rights in patents, patent applications, inventions, copyrights, trademarks, trade secrets, trade names, and other proprietary rights in or relating to the Software and Documentation; including any adaptations, corrections, de-compilations, disassemblies, emulations, enhancements fixes, modifications, translations and updates to or derivative works from, the Software or Documentation, whether made by Tait or another party, or any improvements that result from Tait processes or, provision of information services.

“Licensee” means any individual or entity that has accepted the terms of this License.

“Open Source Software” means software with freely obtainable source code and license for modification, or permission for free distribution.

“Open Source Software License” means the terms or conditions under which the Open Source Software is licensed.

“Person” means any individual, partnership, corporation, association, joint stock company, trust, joint venture, limited liability company, governmental authority, sole proprietorship, or other form of legal entity recognized by a governmental authority.

“Security Vulnerability” means any flaw or weakness in system security procedures, design, implementation, or internal controls that if exercised (accidentally triggered or intentionally exploited) could result in a security breach such that data is compromised, manipulated, or stolen, or a system is damaged.

“Software” (i) means proprietary software in executable code format, and adaptations, translations, de-compilations, disassemblies, emulations, or derivative works of such software; (ii) means any modifications, new versions and new releases of the software provided by Tait; (iii) means any upgrades, enhancements or other functions or features to the Software provided by Tait; and (iv) may contain one or more items of software owned by a third-party supplier. The term "Software" includes the applicable “Software Key” and does not include any third-party software provided under separate license or not licensable under the terms of this Agreement.

“Source Code” means software expressed in human readable language necessary for understanding, maintaining, modifying, correcting, and enhancing any software referred to in this Agreement and includes all states of that software prior to its compilation into an executable programme.

“Software Key” means a code or key that is supplied by Tait to access, enable and use the Software or certain functions or features of the Software.

“Tait” means Tait International Limited and includes its Affiliates.

Section 2 SCOPE

This Agreement contains the terms and conditions of the license Tait is providing to Licensee, and of Licensee’s use of the Software and Documentation. Tait and Licensee enter into this Agreement in connection with Tait delivery of certain proprietary Software and/or products containing embedded or pre-loaded proprietary Software.

© Tait International Limited April 2021

Section 3 GRANT OF LICENSE

3.1. Subject to the provisions of this Agreement and the payment of applicable license fees, Tait grants to Licensee a personal, limited, non-transferable (except as permitted in Section 7), and non-exclusive license to use the Software in executable code form, and the Documentation, solely in connection with Licensee's use of the Designated Products for the useful life of the Designated Products. This Agreement does not grant any rights to source code.

3.2. The Licensee acknowledges that one or more Software Keys may be required from Tait for the Software or certain functions or features of the Software. The Licensee may only access, enable and use such Software or functions or features of the Software with Software Keys issued by Tait. Tait may provide the Licensee with a Software Key for the Software or certain functions or features of the Software agreed to by the parties as part of this Agreement. The Software Key may control the functions or features of the Software licensed in accordance with this Agreement. The Licensee's license to the Software Key is limited to a license to use the Software Key only to access, enable and use the Software or certain functions or features of the Software that Tait has agreed to provide to the Licensee and only in accordance with the Documentation.

3.3. If the Software licensed under this Agreement contains or is derived from Open Source Software, the terms and conditions governing the use of such Open Source Software are in the Open Source Software Licenses of the copyright owner and not in this Agreement. If there is a conflict between the terms and conditions of this Agreement and the terms and conditions of the any applicable Open Source Software Licenses, the terms and conditions of the Open Source Software Licenses will take precedence. For information about Open Source Components contained in Tait products and the related Open Source licenses, see:
https://www.taitradio.com/opensource

Section 4 LIMITATIONS ON USE

4.1. Licensee may use the Software only for Licensee's internal business purposes and only in accordance with the Documentation. Any other use of the Software is strictly prohibited. Without limiting the general nature of these restrictions, Licensee will not make the Software available for use by third parties on a "time sharing," "application service provider," "service bureau" basis, or for any other similar commercial rental or sharing arrangement.

4.2. Licensee will not, and will not directly or indirectly allow or enable any third party to: (i) reverse engineer, disassemble, extract components, decompile, reprogram, or otherwise reduce the Software or any portion thereof to a human perceptible form or otherwise attempt to recreate the source code; (ii) modify, adapt, create derivative works of, or merge the Software; (iii) copy, reproduce, distribute, lend, or lease the Software or Documentation to any third party; (iv) grant any sublicense or other rights in the Software or Documentation to any third party; (v) take any action that would cause the Software or Documentation to be placed in the public domain; (vi) remove, or in any way alter or obscure any copyright notice or other notice of Tait or third-party licensor's proprietary rights; (vii) provide, copy, transmit, disclose, divulge or make the Software or Documentation available to, or permit the use of the Software by, any third party or on any machine except as expressly authorized by this Agreement; or (viii) use, or permit the use of, the Software in a manner that would result in the production of a copy of the Software by any means whatsoever other than what is permitted in this Agreement. Licensee may make one copy of the Software to be used solely for archival, back-up, or disaster recovery purposes; provided that Licensee may not operate that copy of the Software at the same time as the original Software is being operated. Licensee may make as many copies of the Documentation as it may reasonably require for the internal use of the Software.

4.3. Unless otherwise authorized by Tait in writing, Licensee will not, and will not enable or allow any third party to: (i) install a copy of the Software on more than one unit of a Designated Product; or (ii) copy or transfer Software installed on one unit of a Designated Product to any other device. Licensee may temporarily transfer Software installed on a Designated Product to another device if the Designated Product is inoperable or malfunctioning. Temporary transfer of the Software to another device must be discontinued when the original Designated Product is returned to operation and the Software must be removed from the other device.

4.4. Licensee will maintain, during the term of this Agreement and for a period of two years thereafter, accurate records relating to this license grant to verify compliance with this Agreement. Tait, or a third party nominated by Tait, may inspect Licensee's premises, books and records, upon reasonable prior notice to Licensee, during Licensee's normal business hours and subject to Licensee's facility and security regulations. Tait is responsible for the payment of all expenses and costs of the inspection, provided that Licensee shall indemnify Tait for all costs (including audit costs and legal costs on a solicitor client basis) if Licensee has breached the terms of this Agreement. Any information obtained by Tait during the course of the inspection will be kept in strict confidence by Tait and used solely for the purpose of verifying Licensee's compliance with the terms of this Agreement.

Section 5 OWNERSHIP AND TITLE

Tait, its licensors, and its suppliers retain all of their Intellectual Property Rights in and to the Software and Documentation, in any form. No rights are granted to Licensee under this Agreement by implication, estoppel or otherwise, except for those rights which are expressly granted to Licensee in this Agreement. All Intellectual Property developed, originated, or prepared by Tait in connection with providing the

© Tait International Limited April 2021

Software, Designated Products, Documentation, or related services, remains vested exclusively in Tait, and Licensee will not have any shared development or other Intellectual Property Rights.

Section 6 LIMITED WARRANTY; DISCLAIMER OF WARRANTY

6.1. The commencement date and the term of the Software warranty will be a period of one (1) year from Tait shipment of the Software. If Licensee is not in breach of any obligations under this Agreement, Tait warrants that the unmodified Software, when used properly and in accordance with the Documentation and this Agreement, will be free from a reproducible defect that eliminates the functionality or successful operation of a feature critical to the primary functionality or successful operation of the Software. Whether a defect has occurred will be determined solely by Tait. Tait does not warrant that Licensee's use of the Software or the Designated Products will be uninterrupted, error-free, completely free of Security Vulnerabilities, or that the Software or the Designated Products will meet Licensee's particular requirements. Tait makes no representations or warranties with respect to any third-party software included in the Software.

6.2 Tait sole obligation to Licensee, and Licensee's exclusive remedy under this warranty, is to use reasonable efforts to remedy any material Software defect covered by this warranty. These efforts will involve either replacing the media or attempting to correct significant, demonstrable program or documentation errors or Security Vulnerabilities. If Tait cannot correct the defect within a reasonable time, then at Tait option, Tait will replace the defective Software with functionally equivalent Software, license to Licensee substitute Software which will accomplish the same objective, or terminate the license and refund Licensee's paid license fee. If Tait investigation of the perceived defect reveals that no such defect in fact exists, Tait may recover its costs in respect of such investigation from Licensee.

6.3. Tait disclaims any and all other warranties relating to the Software or Documentation other than the express warranties set forth in this Section 6. Warranties in Section 6 are in lieu of all other warranties whether express or implied, oral or written, and including without limitation any and all implied warranties of condition, title, non-infringement, merchantability, or fitness for a particular purpose or use by Licensee (whether Tait knows, has reason to know, has been advised of, or is otherwise aware of any such purpose or use), whether arising by law, by reason of custom or usage of trade, or by course of dealing. In addition, Tait disclaims any warranty to any person other than Licensee with respect to the Software or Documentation.

Section 7 TRANSFERS

7.1. Licensee will not transfer the Software or Documentation to any third party without specific prior written consent from Tait. Tait may withhold such consent or at its own discretion make the consent conditional upon the transferee paying applicable license fees and agreeing to be bound by this Agreement.

7.2. In the case of a value-added reseller or distributor of Tait Designated Products, the consent referred to in Section 7.1 may be contained in a Tait Reseller or Tait Distributor Agreement.

7.3. If the Designated Products are Tait vehicle-mounted mobile products or hand-carried portable radio products and Licensee transfers ownership of the Tait mobile or portable radio products to a third party, Licensee may assign its right to use the Software which is embedded in or furnished for use with the radio products and the related Documentation; provided that Licensee transfers all copies of the Software and Documentation to the transferee.

7.4. 7.4.For the avoidance of any doubt, Section 7.3 excludes TaitNet Infrastructure, or the products listed at any time under network products at: http://www.taitradio.com.

7.5. If Licensee, as a contractor or subcontractor (integrator), is purchasing Tait Designated Products and licensing Software not for its own internal use but for end use only by a Customer, the Licensee may transfer such Software, but only if a) Licensee transfers all copies of such Software and the related Documentation to the transferee and b) Licensee has first obtained from its Customer (and, if Licensee is acting as a subcontractor, from the interim transferee(s) and from the ultimate end user sub license) an enforceable sublicense agreement that prohibits any other transfer and that contains restrictions substantially identical to the terms set forth in this Software License Agreement. Except as stated in the foregoing, Licensee and any transferee(s) authorised by this Section may not otherwise transfer or make available any Tait Software to any third party nor permit any party to do so. Licensee will, on request, make available evidence reasonably satisfactory to Tait demonstrating compliance with all the foregoing.

Section 8 TERM AND TERMINATION

8.1. Licensee's right to use the Software and Documentation will commence when the Designated Products are supplied by Tait to Licensee and will continue for the life of the Designated Products with which or for which the Software and Documentation are supplied, unless Licensee breaches this Agreement, in which case this Agreement and Licensee's right to use the Software and Documentation may be terminated immediately upon notice by Tait.

8.2. Within thirty (30) days after termination of this Agreement, Licensee must certify in writing to Tait that all copies of the Software have been removed or deleted from the Designated Products and that all copies of the Software and Documentation have been returned to Tait or destroyed by Licensee and are no longer in use by Licensee.

8.3. Licensee acknowledges that Tait made a considerable investment of resources in the development, marketing, and distribution of the Software and Documentation and that Licensee's

© Tait International Limited April 2021

breach of this Agreement will result in irreparable harm to Tait for which monetary damages would be inadequate. If Licensee breaches this Agreement, Tait may terminate this Agreement and be entitled to all available remedies at law or in equity including immediate injunctive relief and repossession of all non-embedded Software and associated Documentation. Licensee shall pay all Tait costs (on an indemnity basis) for the enforcement of the terms of this Agreement.

Section 9 CONFIDENTIALITY

Licensee acknowledges that the Software and Documentation contain proprietary and Confidential Information valuable to Tait and are Tait trade secrets, and Licensee agrees to respect the confidentiality of the information contained in the Software and Documentation.

Section 10 LIMITATION OF LIABILITY

10.1. In no circumstances shall Tait be under any liability to Licensee, or any other person whatsoever, whether in Tort (including negligence), Contract (except as expressly provided in this Agreement), Equity, under any Statute, or otherwise at law for any losses or damages whether general, special, exemplary, punitive, direct, indirect, or consequential arising out of or in connection with any use or inability of using the Software.

10.2. Licensee's sole remedy against Tait will be limited to breach of contract and Tait sole and total liability for any such claim shall be limited at the option of Tait to the repair or replacement of the Software or the refund of the purchase price of the Software.

Section 11 GENERAL

11.1. COPYRIGHT NOTICES. The existence of a copyright notice on the Software will not be construed as an admission or presumption of publication of the Software or public disclosure of any trade secrets associated with the Software.

11.2. COMPLIANCE WITH LAWS. Licensee acknowledges that the Software may be subject to the laws and regulations of the jurisdiction covering the supply of the Designated Products and will comply with all applicable laws and regulations, including export laws and regulations, of that country.

11.3. ASSIGNMENTS AND SUBCONTRACTING. Tait may assign its rights or subcontract its obligations under this Agreement, or encumber or sell its rights in any Software, without prior notice to, or consent of, Licensee.

11.4. GOVERNING LAW. This Agreement shall be subject to and construed in accordance with New Zealand law and disputes between the parties concerning the provisions hereof shall be determined by the New Zealand Courts of Law. Provided however Tait may at its election bring proceedings for breach of the terms hereof or for the enforcement of any judgment in relation to a breach of the terms hereof in any jurisdiction Tait considers fit for the purpose of ensuring compliance with the terms hereof or obtaining relief for breach of the terms hereof.

11.5. THIRD-PARTY BENEFICIARIES. This Agreement is entered into solely for the benefit of Tait and Licensee. No third party has the right to make any claim or assert any right under this Agreement, and no third party is deemed a beneficiary of this Agreement. Notwithstanding the foregoing, any licensor or supplier of third-party software included in the Software will be a direct and intended third-party beneficiary of this Agreement.

11.6. SURVIVAL. Sections 4, 5, 6.3, 7, 8, 9, 10, and 11 survive the termination of this Agreement.

11.7. ORDER OF PRECEDENCE. In the event of inconsistencies between this Agreement and any other Agreement between the parties, the parties agree that, with respect to the specific subject matter of this Agreement, this Agreement prevails.

11.8 SECURITY. Tait uses reasonable means in the design and writing of its own Software and the acquisition of third-party Software in order to limit Security Vulnerabilities. While no software can be guaranteed to be free from Security Vulnerabilities, if a Security Vulnerability is discovered, Tait will take the steps specified in Section 6 of this Agreement.

11.9 EXPORT. Licensee will not transfer, directly or indirectly, any Designated Product, Documentation or Software furnished hereunder or the direct product of such Documentation or Software to any country for which New Zealand or any other applicable country requires an export license or other governmental approval without first obtaining such license or approval.

11.10 SEVERABILITY. In the event that any part or parts of this Agreement shall be held illegal or null and void by any court or administrative body of competent jurisdiction, such determination shall not affect the remaining terms which shall remain in full force and effect as if such part or parts held to be illegal or void had not been included in this Agreement. Tait may replace the invalid or unenforceable provision with a valid and enforceable provision that achieves the original intent and economic effect of this Agreement.

11.11 CONSUMER GUARANTEES. Licensee acknowledges that the licenses supplied in terms of this agreement are supplied to Licensee in business, and that the guarantees and other provisions of prevailing consumer protection legislation shall not apply.

11.12 WHOLE AGREEMENT. Licensee acknowledges that it has read this Agreement, understands it and agrees to be bound by its terms and conditions. Licensee also agrees that, subject only to the express terms of any other agreement between Tait and Licensee to the contrary, this is the complete and exclusive statement of the Agreement between it and Tait in relation to the Software. This Agreement supersedes any proposal or prior agreement, oral or written, and any other communications between Licensee and Tait relating to the Software and the Designated Products.

© Tait International Limited April 2021