T830 Series II

Base Station Equipment

136-174MHz

Service Manual

Issue 201

August 1999

M830-00-201

T800 *II*

Head Office
New Zealand

Tait Electronics Ltd
558 Wairakei Road
P.O. Box 1645
Christchurch
New Zealand
Phone: 64 3 358-3399
Fax: 64 3 358-3636

Radio Systems Division

535 Wairakei Road
P.O. Box 1645
Christchurch
New Zealand
Phone: 64 3 358-3399
Fax: 64 3 358-2825

Australia

Tait Electronics (Aust) Pty Ltd
186 Granite Street
Geebung
Queensland 4034
P.O. Box 679
Virginia
Queensland 4014
Australia
Phone: 61 7 3865-7799
Toll Free: 1800 077-112
Fax: 61 7 3865-7990

Beijing

Tait Mobile Radio (HK) Ltd
Beijing Representative Office
Room 812, Tower A
Beijing Bright China
Chang An Building
No. 7 Jianguomennei Dai Jei
Dongcheng District
Beijing
China 100005

Canada

Tait Mobile Radio Inc.
Unit 5, 158 Anderson Avenue
Markham
Ontario L6E1A9
Canada
Phone: 1 905 472-1100
Toll Free: 1 800 890-8248
Fax: 1 905 472-5300

France

Tait France Sarl
2 Avenue de la Cristallerie
92 316 Sèvres, Cedex
France
Phone: 33 1 41 14-05-50
Fax: 33 1 41 14-05-55

Germany

Tait Mobilfunk GmbH
Willstätterstraße 50
D-90449 Nürnberg 60
Germany
Phone: 49 911 96 746-0
Fax: 49 911 96 746-79

Hong Kong

Tait Mobile Radio (HK) Ltd
Unit 2216, North Tower
Concordia Plaza
1, Science Museum Road
Tsim Sha Tsui East
Kowloon
Phone: 852 2369-3040
Fax: 852 2369-3009

New Zealand

Tait Communications Ltd
Unit 4, 75 Blenheim Road
P.O. Box 1185
Christchurch
Phone: 64 3 348-3301
Fax: 64 3 343-0558

Singapore

Tait Electronics (Far East) Pte Ltd
4 Leng Kee Road
SIS Building #05-11A
Singapore 159088
Phone: 65 471-2688
Fax: 65 479-7778

Taiwan

Tait Mobile (Taiwan) Ltd
1104, No. 142 Chung Hsiao E. Rd
Sec. 4
Taipei
Taiwan
Phone: 886 2 2731-1290
Fax: 886 2 2711-6351

Thailand

Tait Mobile Radio Ltd
14/1 Suwan Tower
Third Floor
Soi Saladaeng 1
North Sathorn Road
Bangrak
Bangkok 10500
Thailand
Phone: 662 267-6290
Fax: 662 267-6293

United Kingdom

Tait Europe Ltd
Ermine Business Park
Ermine Road
Huntingdon
Cambridgeshire PE18 6YA
United Kingdom
Phone: 44 1480-52255
Fax: 44 1480-411996

USA

Tait Electronics (USA) Inc.
9434 Old Katy Road
Suite 110
Houston
Texas 77055
USA
Phone: 1 713 984-8684
Toll Free: 1 800 222-1255
Fax: 1 713 468-6944

Internet

http://www.taitworld.com

 Copyright TEL

About This Manual

Scope

This manual contains general, technical and servicing information on T830 Series II 25W, 50W and 100W base stations which comprise the following equipment:

25W base station	T835 receiver T836 25W transmitter
50W base station	T835 receiver T837 exciter T838 50W power amplifier
100W base station	T835 receiver T837 exciter T839 100W power amplifier

Format

We have published this manual in a ring binder so that "revision packages" containing additional information pertaining to new issues of PCBs can be added as required.

Revision Packages

Revision packages will normally be published to coincide with the release of information on a new PCB, and may also contain additions or corrections pertaining to other parts of the manual.

You may order as many packages as you require from your local Tait Dealer or Customer Service Organisation. Revision packages are supplied ready-punched for inclusion in your manual.

Revision Control

Each page in this manual has a date of issue. This is to comply with various Quality Standards, but will also serve to identify which pages have been updated and when. Each page and its publication date is listed in the "List of Effective Pages", and a new list containing any new/revised pages and their publication dates will be sent with each revision package.

Any portion of text that has been changed is marked by a vertical line (as shown at left) in the outer margin of the page or column. Where the removal of an entire paragraph means there is no text left to mark, an arrow (as shown at left) will appear in the outer margin. The number beside the arrow will indicate how many paragraphs have been deleted. Changes to diagrams that cannot be marked by these methods will be explained in an Amendments Box added to the diagram.

The manual issue and revision status are indicated by the last three digits of the manual product code. These digits start at 200 and will increment through 201, 202, 203, etc., as revision packages are published, e.g:

2 0 3

issue status — revision status

Thus, issue 203 indicates the third revision to issue 2 and means that three packages should have been added to the manual. The issue digit will only change if there is a major product revision, or if the number of revision packages to be included means that the manual becomes difficult to use, at which point a new issue manual will be published in a new ring binder.

PCB Information PCB information is provided for all current issue PCBs, as well as all previous issue PCBs manufactured in production quantities, and is grouped according to PCB. Thus, you will find the parts list, grid reference index (if necessary), PCB layouts and circuit diagram(s) for each individual PCB grouped together.

Errors If you find an error in this manual, or have a suggestion on how it might be improved, please do not hesitate to contact Customer Support, Radio Systems Division, Tait Electronics Ltd, Christchurch, New Zealand (full contact details are on page 2).

Updating Equipment And Manuals

In the interests of improving performance, reliability or servicing, Tait Electronics Ltd reserve the right to update their equipment and/or manuals without prior notice.

Copyright

All information contained in this manual is the property of Tait Electronics Ltd. All rights are reserved. This manual may not, in whole or part, be copied, photocopied, reproduced, translated stored or reduced to any electronic medium or machine readable form without prior written permission from Tait Electronics Ltd.

Ordering Tait Service Manuals

You can order additional copies of this service manual from your nearest Tait Dealer or Customer Service Organisation. When ordering, make sure you quote the correct Tait product code ("M" number). Note that only the latest issue of the manual will be available for order.

Publication Information

T830 Series II Service Manual			
Issue	Publication Date	Product Code	Incorporates Revision Package
200	April 1998	M830-00-200	—
201	August 1999	M830-00-201	R830-00-201

Table Of Contents

This manual is divided into nine parts as listed below, with each part being further sub-divided into sections. There is a detailed table of contents at the start of each part and/or section.

Part	Title
A	Introduction To Servicing
B	T835 Receiver
C	T836 Transmitter & T837 Exciter
D	T838 & T839 Power Amplifiers
E	T830 VCO PCB Information
F	Installation
G	System Configurations
H	T800 Ancillary Equipment
I	Using T800 Series II Equipment In A Series I Rack Frame

List Of Effective Pages

The total number of pages in this Manual is 444, as listed below.

Page	Issue Date
1	23/07/99
2	23/07/99
3	23/07/99
4	23/07/99
5	30/04/98
6	23/07/99
7	23/07/99
8	23/07/99
9	23/07/99
10	23/07/99
11	23/07/99
12	23/07/99 (blank)
Part A	
I	23/07/99
II	30/04/98 (blank)
1.1	23/07/99
1.2	30/04/98
2.1	30/04/98
2.2	30/04/98
2.3	23/07/99
2.4	23/07/99
3.1	30/04/98
3.2	23/07/99
4.1	30/04/98
4.2	30/04/98
Part B	
I	30/04/98
II	30/04/98 (blank)
1.1	23/07/99
1.2	30/04/98 (blank)
1.3	30/04/98 (fold-out)
1.4	30/04/98 (fold-out)
1.5	23/07/99
1.6	23/07/99
1.7	23/07/99

Page	Issue Date
1.8	23/07/99
1.9	23/07/99
1.10	23/07/99
1.11	23/07/99
1.12	23/07/99
1.13	23/07/99
1.14	30/04/98 (blank)
2.1	30/04/98
2.2	30/04/98 (blank)
2.3	30/04/98
2.4	23/07/99
2.5	30/04/98
2.6	30/04/98
2.7	30/04/98
2.8	23/07/99
2.9	23/07/99
2.10	23/07/99
2.11	23/07/99
2.12	30/04/98 (blank)
3.1	23/07/99
3.2	23/07/99
3.3	23/07/99
3.4	30/04/98
3.5	23/07/99
3.6	23/07/99
3.7	23/07/99
3.8	23/07/99
3.9	30/04/98
3.10	23/07/99
3.11	23/07/99
3.12	23/07/99
3.13	23/07/99
3.14	23/07/99
4.1	23/07/99
4.2	23/07/99
4.3	23/07/99
4.4	23/07/99
4.5	30/04/98
4.6	23/07/99
4.7	23/07/99
4.8	23/07/99
4.9	30/04/98 (fold-out)
4.10	30/04/98 (fold-out) (blank)

Copyright TEL

Page	Issue Date
5.1	23/07/99
5.2	23/07/99
5.3	30/04/98
5.4	30/04/98
5.5	30/04/98
5.6	23/07/99
5.7	23/07/99
5.8	30/04/98
5.9	30/04/98
5.10	30/04/98
5.11	30/04/98
5.12	23/07/99
5.13	30/04/98
5.14	30/04/98
5.15	30/04/98
5.16	23/07/99
5.17	23/07/99
5.18	30/04/98
5.19	23/07/99
5.20	30/04/98 (blank)
6.1.1	23/07/99
6.1.2	30/04/98 (blank)
6.1.3	30/04/98
6.1.4	30/04/98
6.1.5	30/04/98
6.1.6	30/04/98
6.2.1	30/04/98
6.2.2	30/04/98 (blank)
6.2.3	23/07/99
6.2.4	30/04/98
6.2.5	30/04/98
6.2.6	30/04/98
6.2.7	30/04/98
6.2.8	30/04/98
6.2.9	30/04/98 (fold-out)
6.2.10	30/04/98 (fold-out) (blank)
6.2.11	30/04/98
6.2.12	30/04/98
6.2.13	30/04/98
6.2.14	30/04/98 (blank)
6.2.15	30/04/98 (fold-out)
6.2.16	30/04/98 (fold-out)
6.2.17	30/04/98 (fold-out)
6.2.18	30/04/98 (fold-out)
6.2.19	30/04/98 (fold-out)
6.2.20	30/04/98 (fold-out)
6.2.21	30/04/98 (fold-out)
6.2.22	30/04/98 (fold-out)
6.2.23	30/04/98 (fold-out)
6.2.24	30/04/98 (fold-out)
6.2.25	30/04/98 (fold-out)
6.2.26	23/07/99 (fold-out)
6.2.27	30/04/98 (fold-out)
6.2.28	30/04/98 (fold-out) (blank)

Part C

Page	Issue Date
I	30/04/98
II	30/04/98 (blank)
1.1	30/04/98
1.2	30/04/98 (blank)
1.3	30/04/98 (fold-out)
1.4	30/04/98 (fold-out)
1.5	30/04/98 (fold-out)
1.6	30/04/98 (fold-out)
1.7	23/07/99
1.8	23/07/99
1.9	23/07/99
1.10	23/07/99
1.11	23/07/99
1.12	30/04/98
1.13	23/07/99
1.14	23/07/99
1.15	23/07/99
1.16	30/04/98 (blank)
2.1	30/04/98
2.2	30/04/98
2.3	30/04/98
2.4	23/07/99
2.5	30/04/98
2.6	23/07/99
2.7	30/04/98
2.8	23/07/99
2.9	23/07/99
2.10	23/07/99
2.11	23/07/99
2.12	30/04/98
2.13	30/04/98
2.14	30/04/98 (blank)
3.1	23/07/99
3.2	23/07/99
3.3	23/07/99
3.4	23/07/99
3.5	30/04/98
3.6	23/07/99
3.7	23/07/99
3.8	30/04/98
3.9	23/07/99

Page	Issue Date
3.10	30/04/98
3.11	23/07/99
3.12	23/07/99
3.13	23/07/99
3.14	23/07/99
4.1	23/07/99
4.2	23/07/99
4.3	23/07/99
4.4	23/07/99
4.5	23/07/99
4.6	30/04/98
4.7	23/07/99
4.8	30/04/98
4.9	30/04/98 (fold-out)
4.10	30/04/98 (fold-out) (blank)
4.11	30/04/98 (fold-out)
4.12	30/04/98 (fold-out) (blank)
5.1	23/07/99
5.2	30/04/98
5.3	30/04/98
5.4	30/04/98
5.5	30/04/98
5.6	30/04/98
5.7	30/04/98
5.8	30/04/98
5.9	30/04/98
5.10	30/04/98
5.11	23/07/99
5.12	23/07/99
5.13	30/04/98
5.14	30/04/98
5.15	30/04/98
5.16	23/07/99
5.17	30/04/98
5.18	30/04/98
5.19	23/07/99
5.20	23/07/99
6.1.1	23/07/99
6.1.2	30/04/98 (blank)
6.1.3	30/04/98
6.1.4	30/04/98
6.1.5	30/04/98
6.1.6	30/04/98
6.2.1	30/04/98
6.2.2	30/04/98 (blank)
6.2.3	23/07/99
6.2.4	30/04/98
6.2.5	30/04/98
6.2.6	30/04/98
6.2.7	30/04/98
6.2.8	30/04/98
6.2.9	30/04/98 (fold-out)
6.2.10	30/04/98 (fold-out) (blank)
6.2.11	30/04/98
6.2.12	30/04/98
6.2.13	30/04/98
6.2.14	30/04/98 (blank)
6.2.15	30/04/98 (fold-out)
6.2.16	30/04/98 (fold-out)
6.2.17	30/04/98 (fold-out)
6.2.18	30/04/98 (fold-out)
6.2.19	30/04/98 (fold-out)
6.2.20	30/04/98 (fold-out)
6.2.21	30/04/98 (fold-out)
6.2.22	30/04/98 (fold-out)
6.2.23	30/04/98 (fold-out)
6.2.24	30/04/98 (fold-out)
6.2.25	23/07/99 (fold-out)
6.2.26	30/04/98 (fold-out)
6.3.1	30/04/98
6.3.2	30/04/98 (blank)
6.3.3	23/07/99
6.3.4	30/04/98
6.3.5	30/04/98
6.3.6	30/04/98
6.3.7	30/04/98
6.3.8	30/04/98
6.3.9	30/04/98 (fold-out)
6.3.10	30/04/98 (fold-out) (blank)
6.3.11	30/04/98
6.3.12	30/04/98
6.3.13	30/04/98
6.3.14	30/04/98 (blank)
6.3.15	30/04/98 (fold-out)
6.3.16	30/04/98 (fold-out)
6.3.17	30/04/98 (fold-out)
6.3.18	30/04/98 (fold-out)
6.3.19	30/04/98 (fold-out)
6.3.20	30/04/98 (fold-out)
6.3.21	30/04/98 (fold-out)
6.3.22	30/04/98 (fold-out)
6.3.23	30/04/98 (fold-out)
6.3.24	30/04/98 (fold-out)
6.3.25	23/07/99 (fold-out)
6.3.26	30/04/98 (fold-out)
6.3.27	23/07/99
6.3.28	23/07/99
6.3.29	23/07/99
6.3.30	23/07/99

Copyright TEL

Page	Issue Date
6.3.31	23/07/99
6.3.32	23/07/99
6.3.33	23/07/99 (fold-out)
6.3.34	23/07/99 (fold-out) (blank)
6.3.35	23/07/99
6.3.36	23/07/99
6.3.37	23/07/99
6.3.38	23/07/99 (blank)
6.3.39	23/07/99 (fold-out)
6.3.40	23/07/99 (fold-out)
6.3.41	23/07/99 (fold-out)
6.3.42	23/07/99 (fold-out)
6.3.43	23/07/99 (fold-out)
6.3.44	23/07/99 (fold-out)
6.3.45	23/07/99 (fold-out)
6.3.46	23/07/99 (fold-out)
6.3.47	23/07/99 (fold-out)
6.3.48	23/07/99 (fold-out)
6.3.49	23/07/99 (fold-out)
6.3.50	23/07/99 (fold-out)

Part D

Page	Issue Date
I	23/07/99
II	30/04/98 (blank)
1.1	30/04/98
1.2	30/04/98 (blank)
1.3	30/04/98 (fold-out)
1.4	30/04/98 (fold-out)
1.5	30/04/98
1.6	23/07/99
1.7	23/07/99
1.8	30/04/98
1.9	23/07/99
1.10	23/07/99
2.1	23/07/99
2.2	30/04/98 (blank)
2.3	23/07/99
2.4	30/04/98
2.5	23/07/99
2.6	30/04/98
2.7	23/07/99
2.8	23/07/99
3.1	23/07/99
3.2	30/04/98 (blank)
3.3	30/04/98
3.4	30/04/98
3.5	30/04/98
3.6	30/04/98
3.7	30/04/98
3.8	30/04/98 (blank)
3.9	30/04/98 (fold-out)
3.10	30/04/98 (fold-out) (blank)
4.1	23/07/99
4.2	30/04/98 (blank)
4.3	30/04/98
4.4	30/04/98 (blank)
4.5	30/04/98 (fold-out)
4.6	30/04/98 (fold-out)
4.7	30/04/98
4.8	30/04/98
4.9	30/04/98
4.10	30/04/98
4.11	23/07/99
4.12	30/04/98
4.13	23/07/99
4.14	30/04/98 (blank)
5.1.1	23/07/99
5.1.2	30/04/98 (blank)
5.1.3	23/07/99
5.1.4	30/04/98
5.1.5	30/04/98
5.1.6	30/04/98
5.2.1	30/04/98
5.2.2	30/04/98 (blank)
5.2.3	23/07/99
5.2.4	30/04/98
5.2.5	30/04/98
5.2.6	30/04/98
5.2.7	30/04/98 (fold-out)
5.2.8	30/04/98 (fold-out) (blank)
5.2.9	30/04/98
5.2.10	30/04/98
5.2.11	30/04/98 (fold-out)
5.2.12	23/07/99 (fold-out)
5.2.13	30/04/98 (fold-out)
5.2.14	30/04/98 (fold-out)
5.3.1	30/04/98
5.3.2	30/04/98 (blank)
5.3.3	23/07/99
5.3.4	30/04/98
5.3.5	30/04/98
5.3.6	30/04/98
5.3.7	30/04/98 (fold-out)
5.3.8	30/04/98 (fold-out) (blank)
5.3.9	30/04/98

Page	Issue Date
5.3.10	30/04/98
5.3.11	30/04/98 (fold-out)
5.3.12	23/07/99 (fold-out)
5.3.13	30/04/98 (fold-out)
5.3.14	30/04/98 (fold-out)
Part E	
I	30/04/98
II	30/04/98 (blank)
1.1	30/04/98
1.2	30/04/98
1.3	30/04/98
1.4	30/04/98 (blank)
2.1	30/04/98
2.2	30/04/98 (blank)
2.3	23/07/99
2.4	30/04/98
2.5	30/04/98
2.6	30/04/98
2.7	30/04/98
2.8	30/04/98
2.9	30/04/98 (fold-out)
2.10	30/04/98 (fold-out) (blank)
Part F	
I	23/07/99
II	23/07/99
1.1	23/07/99 (fold-out)
1.2	23/07/99 (fold-out)
2.1	23/07/99 (fold-out)
2.2	23/07/99 (fold-out)
3.1	23/07/99 (fold-out)
3.2	23/07/99 (fold-out)
4.1	23/07/99
4.2	23/07/99
Part G	
I	30/04/98
II	30/04/98
1.1	23/07/99
1.2	30/04/98
1.3	30/04/98
1.4	30/04/98 (blank)
2.1	30/04/98
2.2	30/04/98
2.3	30/04/98
2.4	30/04/98 (blank)
3.1	30/04/98
3.2	30/04/98 (blank)
4.1	30/04/98
4.2	30/04/98
5.1	30/04/98
5.2	30/04/98
Part H	
I	23/07/99
II	30/04/98 (blank)
1	23/07/99
2	30/04/98
3	23/07/99
4	30/04/98
5	23/07/99
6	23/07/99
7	23/07/99
8	23/07/99
9	23/07/99
10	23/07/99
11	23/07/99
12	23/07/99
13	23/07/99
14	23/07/99
Part I	
I	30/04/98
II	30/04/98 (blank)
1.1	30/04/98
1.2	30/04/98 (blank)
2.1	23/07/99
2.2	30/04/98
2.3	30/04/98

Copyright TEL

Page	Issue Date	Page	Issue Date
2.4	30/04/98		
2.5	23/07/99		
2.6	30/04/98		
2.7	30/04/98		
2.8	30/04/98 (blank)		
3.1	23/07/99		
3.2	30/04/98		
3.3	30/04/98		
3.4	30/04/98		
3.5	30/04/98		
3.6	30/04/98 (blank)		

Copyright TEL

Part A Introduction To Servicing

This part of the manual is divided into the sections listed below. These sections provide some general and advisory information on servicing procedures, and a brief history of PGM800Win programming software.

Section	Title	Page
1	**General**	**1.1**
1.1	Additional Technical Information	1.1
1.2	Caution: CMOS Devices	1.1
1.3	Caution: Aerial Load	1.2
1.4	Caution: Beryllium Oxide & Power Transistors	1.2
2	**Mechanical**	**2.1**
2.1	Torx Recess Head Screws	2.1
2.2	Pozidriv & Philips Recess Head Screws	2.2
2.3	Disassembly/Reassembly	2.3
2.3.1	Receivers/Exciters/Transmitters	2.3
2.3.2	Power Amplifiers	2.3
2.4	Cover Screw Torques	2.3
2.5	Chassis & Cover Compatibility	2.4
3	**Component Replacement**	**3.1**
3.1	Leaded Components	3.1
3.1.1	Desoldering Iron Method	3.1
3.1.2	Component Cutting Method	3.1
3.2	Surface Mount Devices	3.2
3.3	Cased Mica Capacitors	3.2
4	**Software History**	**4.1**
4.1	PGM800Win V1.0	4.1
4.2	PGM800Win V2.00	4.1

Figure	Title	Page
1.1	Typical Product Code & Serial Number Labels	1.1
1.2	Typical Anti-static Bench Set-up	1.2
2.1	Torx Screw Identification	2.1
2.2	Pozidriv & Philips Screw & Screwdriver Identification	2.2
2.3	Identification Of New-Design Chassis & Covers	2.4

Copyright TEL

1 General

1.1 Additional Technical Information

If you have any questions about this manual or the equipment it describes, please contact your nearest Tait Dealer or Customer Service Organisation. If necessary, you can get additional technical help from Customer Support, Radio Systems Division, Tait Electronics Ltd, Christchurch, New Zealand (full contact details are on page 2).

When requesting information, please quote either the manual product code (e.g. M830-00-200), or the equipment product code and serial number which are printed on a label on the back of the product (as shown in Figure 1.1).

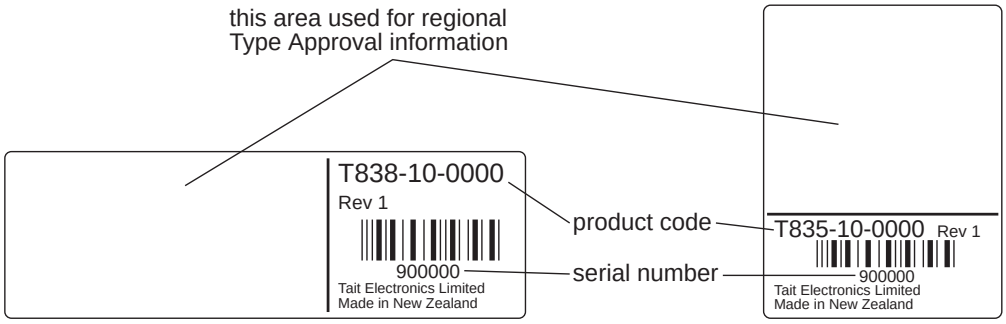

Figure 1.1 Typical Product Code & Serial Number Labels

If you require information about a particular PCB, please quote the full PCB internal part number (IPN) which is screen printed onto the top side of the board (refer to the appropriate PCB Information section in this manual for more details).

1.2 Caution: CMOS Devices

This equipment contains CMOS Devices which are susceptible to damage from static charges. Care when handling these devices is essential. For correct handling procedures refer to the manufacturers' data books, e.g. Philips data books covering CMOS devices, or Motorola CMOS data books, Section 5 'Handling', etc.

An anti-static bench kit (refer to Figure 1.2) is available from Tait Electronics Ltd under the following product codes:

- KS0001 - 1 conductive rubber bench mat
  - 1 earth lead to connect the mat to ground
- KS0004 - 1 wrist strap.

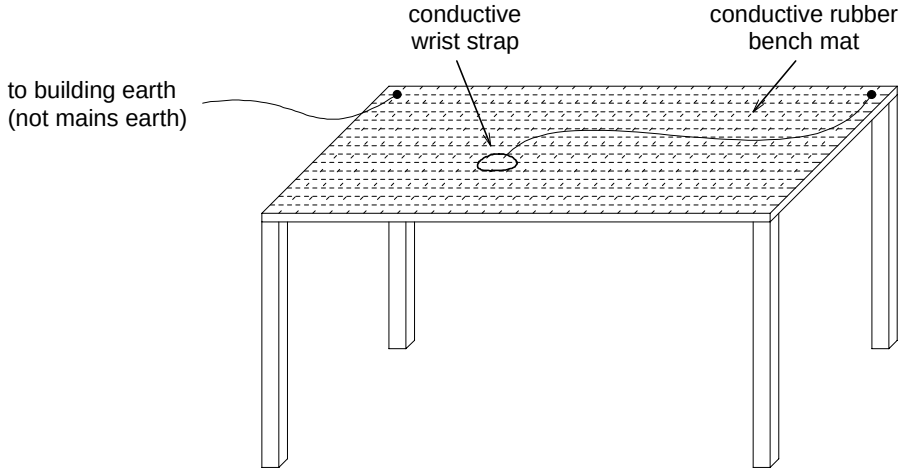

Figure 1.2 Typical Anti-static Bench Set-up

1.3 Caution: Aerial Load

The equipment has been designed to operate safely under a wide range of aerial loading conditions. However, we strongly recommend that the transmitter should always be operated with a suitable load to prevent damage to the transmitter output power stage.

1.4 Caution: Beryllium Oxide & Power Transistors

The RF power transistors in current use all contain some beryllium oxide. This substance, while perfectly harmless in its normal solid form, can become a severe health hazard when it has been reduced to dust. For this reason the RF power transistors should not be broken open, mutilated, filed, machined, or physically damaged in any way that can produce dust particles.

 Copyright TEL

2 Mechanical

2.1 Torx Recess Head Screws

Torx recess head screws are becoming the standard screw head type in all T800 Series II equipment, with Pozidriv and Philips recess head screws being used in fewer applications.

The Torx recess head has the advantage of improved screwdriver tip location, reducing the chances of screw head damage caused by the driver tip rotating within the recess. In addition, using a ball-tip Torx screwdriver allows you to drive a Torx head screw with the driver on a slight angle, which can be useful in situations where access is restricted.

It is important that you use the correct Torx screwdriver tip:

M3 screws - T10
M4 screws - T20.

Figure 2.1 below shows a typical Torx recess head screw (actual hardware may differ slightly from this illustration due to variations in manufacturing techniques).

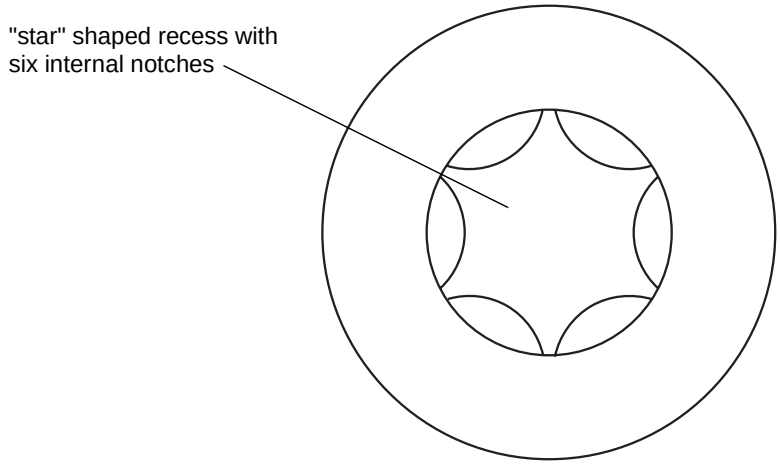

Figure 2.1 Torx Screw Identification

2.2 Pozidriv & Philips Recess Head Screws

Pozidriv and Philips recess head screws will continue to be used in T800 Series II equipment in a few special applications. It is important that you use the correct type and size screwdriver for each screw type to avoid damaging the screw head.

It is particularly important that you do not use Philips screwdrivers on Pozidriv screw heads as the tapered driving flutes of the Philips screwdriver do not engage correctly with the parallel-sided slots in the Pozidriv screw head. This can result in considerable damage to the screw head if the screwdriver tip turns inside the recess.

Note: If you find you need excessive downwards pressure to keep the screwdriver tip in the Pozidriv screw head, you are probably using the wrong type and/or size screwdriver.

Figure 2.2 below shows the main differences between typical Pozidriv and Philips screw heads and screwdriver tips (actual hardware may differ slightly from these illustrations due to variations in manufacturing techniques).

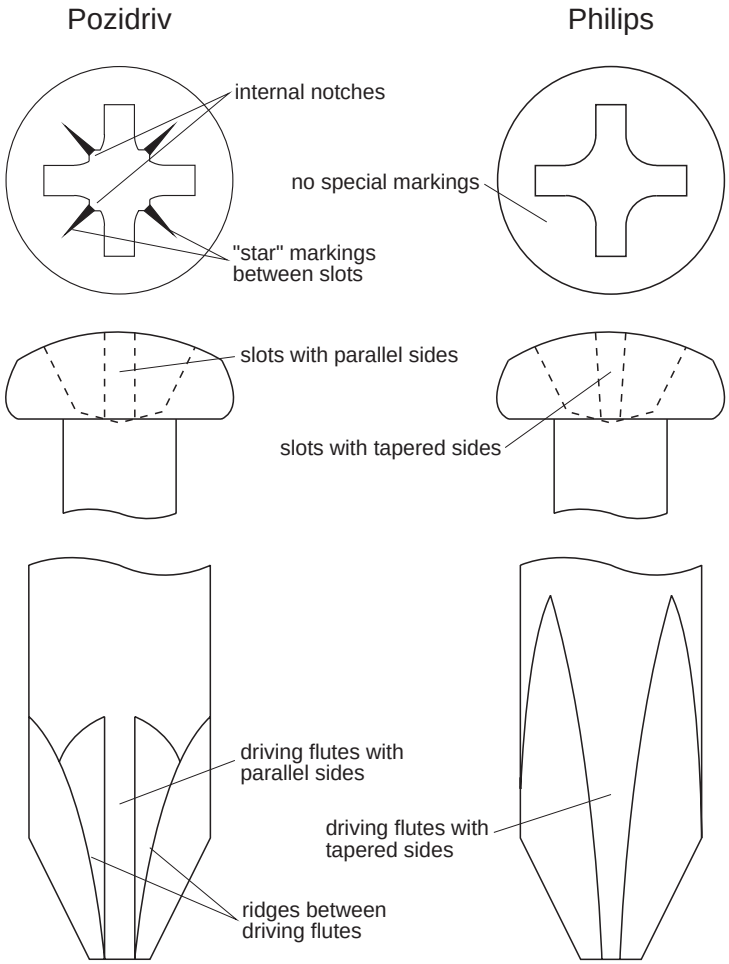

Figure 2.2 Pozidriv & Philips Screw & Screwdriver Identification

 Copyright TEL

2.3 Disassembly/Reassembly

2.3.1 Receivers/Exciters/Transmitters

To carry out alignment or change option links, you need to remove only the top cover, i.e. the one adjacent to the front panel handle and on the opposite side to the main D-range connector (D-range 1/PL100).

You need to remove the bottom cover to:

- access transmitter RF power transistors and many SMD components
- change solder blob links
- fit test leads to circuit block access points.

2.3.2 Power Amplifiers

You should carry out the tuning and power output level setting procedures with the cover on.

2.4 Cover Screw Torques

Receivers/Exciters/Transmitters	..	1.36Nm/12in.lbf.
Power Amplifiers	..	0.9Nm/in.lbf.

2.5 Chassis & Cover Compatibility

The chassis and covers used in T800 Series II modules incorporate a number of design changes to improve Electro-Magnetic Compatibility (EMC) performance. It is important that only the new-design covers are fitted to the new chassis to ensure correct mechanical fit and continued compliance with appropriate EMC Type Approval regulations.

Figure 2.3 below shows some of the main features which can be used to identify the new-design chassis and covers.

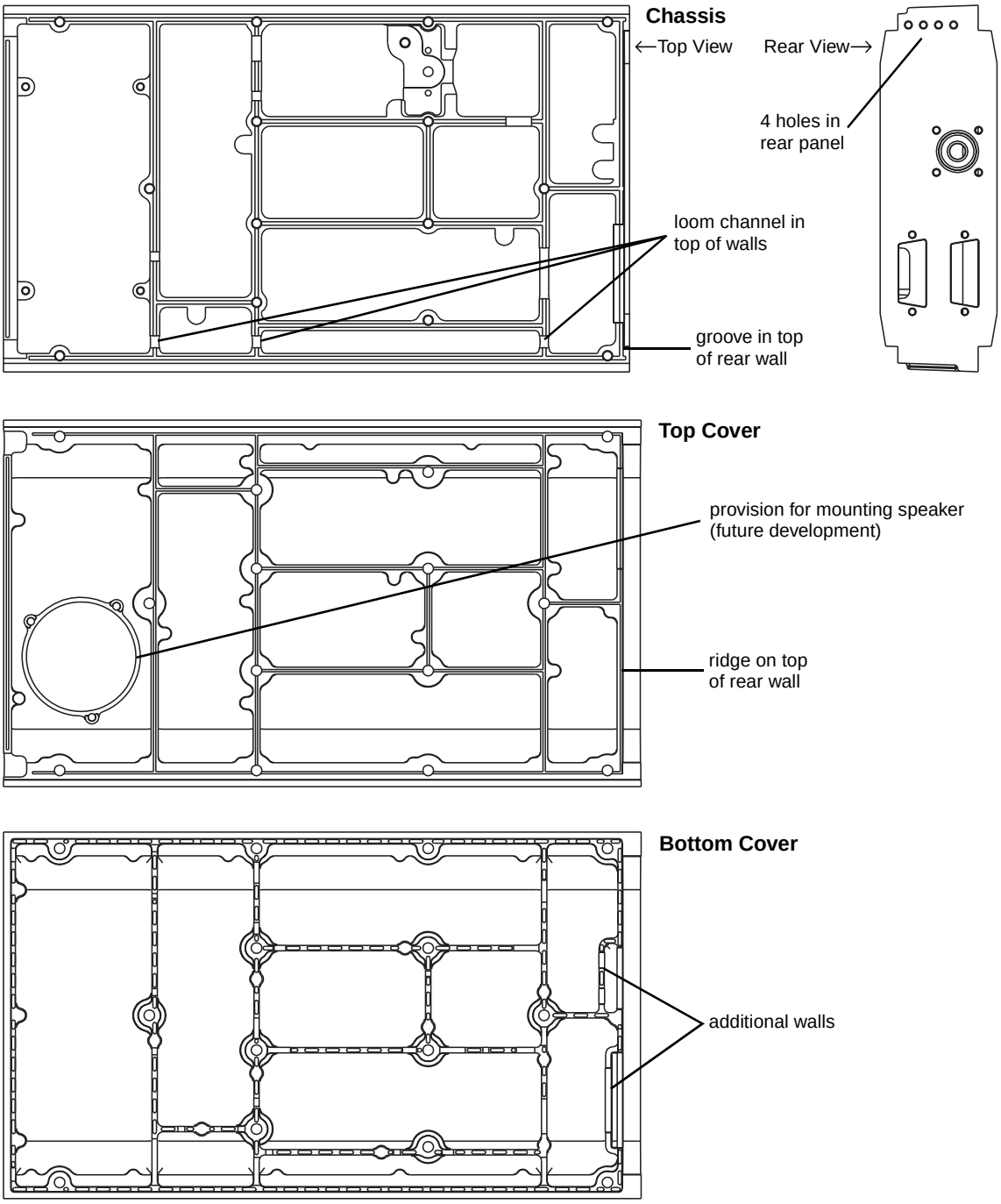

Figure 2.3 Identification Of New-Design Chassis & Covers

 Copyright TEL

3 Component Replacement

3.1 Leaded Components

Whenever you are doing any work on the PCB that involves removing or fitting components, you must take care not to damage the copper tracks. The two satisfactory methods of removing components from plated-through hole (PTH) PCBs are detailed below.

Note: The first method requires the use of a desoldering station, e.g. Philips SBC 314 or Pace MBT-100E.

3.1.1 Desoldering Iron Method

Place the tip over the lead and, as the solder starts to melt, move the tip in a circular motion.

Start the suction and continue the movement until 3 or 4 circles have been completed.

Remove the tip while continuing suction to ensure that all solder is removed from the joint, then stop the suction.

Before pulling the lead out, ensure it is not stuck to the plating.

If the lead is still not free, resolder the joint and try again.

Note: The desoldering iron does not usually have enough heat to desolder leads from the ground plane. Additional heat may be applied by holding a soldering iron on the tip of the desoldering iron (this may require some additional help).

3.1.2 Component Cutting Method

Cut the leads on the component side of the PCB.

Heat the solder joint ***sufficiently*** to allow ***easy*** removal of the lead by drawing it out from the component side: do ***not*** use undue force.

Fill the hole with solder and then clear with solderwick.

3.2 Surface Mount Devices

Caution: **Surface mount devices (SMDs) require special storage, handling, removal and replacement techniques. This equipment should be serviced only by an approved Tait Dealer or Customer Service Organisation equipped with the necessary facilities. Repairs attempted with incorrect equipment or by untrained personnel may result in permanent damage. If in doubt, contact your nearest Tait Dealer or Customer Service Organisation.**

3.3 Cased Mica Capacitors

Cased mica capacitors can be removed by heating the top with a heavy-duty soldering iron and gently lifting the capacitor off the PCB with a solder-resistant spike or equivalent.

 Copyright TEL

4 Software History

28/06/96	PGM800Win Version 1.0
18/08/97	PGM800Win Version 2.00

4.1 PGM800Win V1.0

PGM800Win V1.0 is different in concept from DOS versions of PGM800 in that it is Windows[1] based. It also includes many new and improved features over DOS versions of PGM800.

The major changes are outlined below:

- The Windows™ environment makes data entry and editing significantly easier.
- PGM800Win includes several new radio models which are not programmable with DOS versions of PGM800.
- Out of range frequencies will result in warning messages and will not be accepted for entry into the standard library module. User defined modules can be created, however, allowing variation from the standard library module.
- Channel numbers default to 0-127 to match the EPROM memory locations. However, the user can change this setting so that the channel numbers run from 1-128 to suit his/her particular needs.

Note: The data files produced by BASEPROG V1.0 and all DOS versions of PGM800 are still compatible with PGM800Win V1.0.

4.2 PGM800Win V2.00

PGM800Win V2.00 is an upgraded and expanded version of PGM800Win V1.0. It has been developed specifically for T800 Series II base stations, but retains the ability to program Series I equipment.

The major changes are outlined below:

- PGM800Win V2.0 will program T800 Series II base station modules via serial communications.
- Deviation and reference modulation settings are written automatically to the radio.

1. Windows is a registered trademark of the Microsoft Corporation.

- Extra information that is not stored in the radio (but which is still relevant to the radio) can be saved to a file on disk (e.g. note field, auxiliary pin names, etc.).

Note: The data files produced by BASEPROG V1.0, all DOS versions of PGM800, and PGM800Win V1.0 are still compatible with PGM800Win V2.00.

 Copyright TEL

Part B T835 Receiver

This part of the manual is divided into six sections, as listed below. There is a detailed table of contents at the start of each section.

Section	Title
1	General Information
2	Circuit Operation
3	Initial Tuning & Adjustment
4	Functional Testing
5	Fault Finding
6	PCB Information

Copyright TEL

1 T835 General Information

This section provides a brief description of the T835 receiver, along with detailed specifications and a list of types available.

The following topics are covered in this section.

Section	Title	Page
1.1	**Introduction**	**1.5**
1.2	**Specifications**	**1.6**
1.2.1	Introduction	1.6
1.2.2	General	1.7
1.2.3	RF Section	1.7
1.2.4	Audio Section	1.9
1.2.4.1	General	1.9
1.2.4.2	CTCSS	1.9
1.2.4.3	Mute Operation	1.10
1.2.5	Microcontroller	1.10
1.2.6	Test Standards	1.10
1.2.6.1	European Telecommunication Standard (ETS)	1.10
1.2.6.2	DTI CEPT Recommendation T/R-24-01	1.11
1.2.6.3	Telecommunications Industry Association	1.11
1.3	**Product Codes**	**1.12**
1.4	**Standard Product Range**	**1.13**

Figure	Title	Page
1.1	T835 Main Circuit Block Identification	1.4
1.2	T835 Front Panel Controls	1.4

Copyright TEL

replace A4 pages B1.3/B1.4 with A3 pages B1.3/B1.4

replace A4 pages B1.3/B1.4 with A3 pages B1.3/B1.4

Copyright TEL

1.1 Introduction

The T835 is a high performance microprocessor controlled FM base station receiver designed for single or multichannel operation in the 136 to 174MHz frequency range[1].

The receiver is a dual conversion superhet with a synthesised local oscillator. The first IF is 21.4MHz, allowing exceptionally high spurious signal rejection to be achieved in the receiver front end. The second IF section (455kHz) combines amplitude limiting, detection and RSSI within a single integrated circuit. This IC also drives a noise level detector for gating the audio output. RSSI can also be used to drive a carrier mute for audio output gating (link selectable).

The audio section output can be adjusted to deliver >+10dBm to a 600 ohm balanced output, and 1W to a local monitor speaker. A flat or de-emphasised audio response is link selectable.

The synthesiser frequency is programmed via the serial communications port. Eight channel select lines are accessible via an optional D-range connector (D-range 2 - T800-03-0000) at the rear of the set.

All components except those on the VCO board are mounted on a single PCB. This is secured to a die-cast chassis which is divided into compartments to individually shield each section of circuitry. Access to both sides of the main PCB is obtained by removing each of the two chassis covers. There is provision within the chassis to mount small option PCBs.

The front panel controls include gating sensitivity, line level, monitor volume and a monitor mute switch.

The T835 has a width of 60mm and occupies a single space in a Tait rack frame, which has the ability to accommodate up to seven standard modules.

1. Although capable of operating over the 136-174MHz frequency range, the T835 has a 3MHz switching range (see Section 1.2.3 and Section 3.1).

1.2 Specifications

1.2.1 Introduction

The performance figures given are minimum figures, unless otherwise indicated, for equipment tuned with the maximum switching range and operating at standard room temperature (+22°C to +28°C) and standard test voltage (13.8V DC).

Where applicable, the test methods used to obtain the following performance figures are those described in the EIA and ETS specifications. However, there are several parameters for which performance according to the CEPT specification is given. Refer to Section 1.2.6 for details of test standards.

Details of test methods and the conditions which apply for Type Approval testing in all countries can be obtained from Tait Electronics Ltd.

The terms "wide bandwidth", "mid bandwidth" and "narrow bandwidth" used in this and following sections are defined in the following table.

	Channel Spacing	Modulation 100% Deviation	Receiver IF Bandwidth
Wide Bandwidth	25kHz	±5.0kHz	15.0kHz
Mid Bandwidth	20kHz	±4.0kHz	12.0kHz
Narrow Bandwidth	12.5kHz	±2.5kHz	7.5kHz

Sensitivity and distortion figures are stated for standard operating conditions which includes audio de-emphasis. Note that the sensitivity and distortion figures will be degraded when flat audio is selected.

	Link PL210	Link PL220
De-emphasised Audio	1-2	2-3
Flat Audio	2-3	1-2

 Copyright TEL

1.2.2 General

Number Of Channels	..	128 (standard)[1]
Supply Voltage:		
Operating Voltage	..	10.8 to 16V DC
Standard Test Voltage	..	13.8V DC
Polarity	..	negative earth only
Polarity Protection	..	crowbar diode
Supply Current:		
Standby	..	350mA
Full Audio	..	800mA
Operating Temperature Range	..	-30°C to +60°C
Dimensions:		
Height	..	183mm
Width	..	60mm
Length	..	324mm
Weight	..	2.13kg

1.2.3 RF Section

Frequency Range	..	136-174MHz
Type	..	dual conversion superheterodyne
Frequency Increment	..	5 or 6.25kHz
Switching Range	..	3MHz (i.e. ±1.5MHz from the centre frequency)
Input Impedance	..	50 ohms
Frequency Stability (see also Section 1.4)	..	±2.5ppm, -30°C to +60°C (±1ppm available for special applications)
Signal Strength Indicator (RSSI)	..	-115dBm to -70dBm, 3.5 to 6.5V at approx. 15dB/V

1. Additional channels may be factory programmed. Contact your nearest Tait Dealer or Customer Service Organisation.

IF Amplifiers:

Frequencies	..	21.4MHz and 455kHz
Bandwidths-		
Narrow Bandwidth (NB)	..	7.5kHz
Mid Bandwidth (MB)	..	12kHz
Wide Bandwidth (WB)	..	15kHz

Sensitivity (De-emphasised Response):

Single Channel	..	-117dBm
Bandspread (12dB Sinad)	..	-115dBm (across switching range)

Sensitivity (Flat Response):

Single Channel	..	-111dBm
Bandspread (12dB Sinad)	..	-109dBm (across switching range)

Signal+Noise To Noise Ratio (Typical):

		De-emphasised	Flat
RF Level -107dBm (CEPT)	..	30dB (WB) 25dB (NB)	25dB (WB) 20dB (NB)
RF Level -83dBm (CEPT)	..	54dB (MB) 50dB (NB)	49dB (MB) 45dB (NB)
RF Level -57dBm (EIA)	..	55dB (WB)	52dB (WB)

Selectivity:

Narrow Bandwidth (±12.5kHz)	..	86dB minimum, 89dB typical
Mid Bandwidth (±20kHz)	..	87dB minimum, 90dB typical
Wide Bandwidth (±25kHz)	..	92dB minimum, 95dB typical

Offset Selectivity (Canada only)	..	20dB
Spurious Response Attenuation	..	100dB (typical)

Intermodulation Response Attenuation:

Narrow Bandwidth	..	80dB CEPT (typical)
Mid Bandwidth	..	80dB CEPT (typical)
Wide Bandwidth	..	85dB EIA (typical)

Blocking	..	100dB
Co-channel Rejection	..	6dB
Amplitude Characteristic	..	3dB

Spurious Emissions:

Conducted	..	-90dBm to 4GHz
Radiated	..	-57dBm to 1GHz -47dBm to 4GHz

Copyright TEL

1.2.4 Audio Section

1.2.4.1 General

Outputs Available .. line and monitor

Frequency Response .. flat or de-emphasised (750µs) (link selectable)

Flat Response:

Bandwidth .. 67 to 3400Hz
Response .. within +1, -2dB of output level at 1kHz

De-emphasised Response:

Bandwidth .. 300 to 3400Hz
Response .. within +1, -3dB of a 6dB/octave de-emphasis characteristic (ref. 1kHz)

Line Output:

Power .. adjustable to >+10dBm
Load Impedance .. 600 ohms
Distortion (@ -70dBm signal level):

		De-emphasised	Flat
Wide Bandwidth	..	≤2%	≤2%
Mid & Narrow Bandwidth	..	≤2%	≤4%

Monitor Output:

Power .. 1W
Speaker Impedance .. 4 ohms
Distortion .. ≤3%
(@ -70dBm signal level, links set to de-emphasis)

1.2.4.2 CTCSS

Linkable High Pass Filter:

Bandwidth .. 350 to 3400Hz
Response .. within +1, -3dB of level at 1kHz
Hum And Noise .. 30dB min. at 250.3Hz
(1kHz at 60% system deviation 35dB typical (67 to 240Hz)
CTCSS at 10% system deviation)

Tone Detect:

Tone Squelch Opening .. better than 6dB sinad
3dB sinad at 250.3Hz (typical)
4dB sinad at 100Hz (typical)

Tone Detect Bandwidth .. ±2.1Hz accept (typical)
±3.0Hz reject (typical)

Response Time .. 150ms open and close (typical)

1.2.4.3 Mute Operation

Systems Available .. noise mute and carrier mute

Noise Mute:

Operating Range	..	6-20dB sinad
Hysteresis	..	1.5 to 6dB
Threshold	..	adjustable to -105dBm
Opening Time	..	20ms
Closing Time	..	50ms

Carrier Mute (Optional):

Operating Range	..	-115 to -80dBm
Hysteresis	..	2 to 10dB
Opening Time	..	5ms
Closing Time	..	50ms

Note: The opening and closing times given above are for the standard set-up (SL210 linked and SL220 not linked - refer to Section 3.8).

1.2.5 Microcontroller

Auxiliary Ports:

Open Drain Type	..	capable of sinking 2.25mA via 2k2Ω
V_{ds} max.	..	5V

1.2.6 Test Standards

Where applicable, this equipment is tested in accordance with the following standards.

1.2.6.1 European Telecommunication Standard

ETS 300 086 January 1991

Radio equipment and systems; land mobile service; technical characteristics and test conditions for radio equipment with an internal or external RF connector intended primarily for analogue speech.

ETS 300 113 March 1996

Radio equipment and systems; land mobile service; technical characteristics and test conditions for radio equipment intended for the transmission of data (and speech) and having an antenna connector.

ETS 300 219 October 1993

Radio equipment and systems; land mobile service; technical characteristics and test conditions for radio equipment transmitting signals to initiate a specific response in the receiver.

 Copyright TEL

ETS 300 279 February 1996

Radio equipment and systems; electromagnetic compatibility (EMC) standard for private land mobile radio (PMR) and ancillary equipment (speech and/or non-speech).

1.2.6.2 DTI CEPT Recommendation T/R-24-01

Annex I: 1988

Technical characteristics and test conditions for radio equipment in the land mobile service intended primarily for analogue speech.

Annex II: 1988

Technical characteristics of radio equipment in the land mobile service with regard to quality and stability of transmission.

1.2.6.3 Telecommunications Industry Association

ANSI/TIA/EIA-603-1992

Land mobile FM or PM communications equipment measurement and performance standards.

1.3 Product Codes

The three groups of digits in the T830 Series II product code provide information about the model, type and options fitted, according to the conventions described below.

The following explanation of T830 Series II product codes is not intended to suggest that any combination of features is necessarily available in any one product. Consult your nearest Tait Dealer or Customer Service Organisation for more information regarding the availability of specific models, types and options.

Model

The Model group indicates the basic function of the product, as follows:

T83X-XX-XXXX	T835 receiver T836 25W transmitter T837 exciter T838 50W power amplifier T839 100W power amplifier

Type

The Type group uses two digits to indicate the basic RF configuration of the product.

The first digit in the Type group designates the frequency range:

T83X-**X**X-XXXX	'1' for 136-156MHz '2' for 148-174MHz

The second digit in the Type group indicates the channel spacing:

T83X-X**X**-XXXX	'0' for wide bandwidth (25kHz) '3' for mid bandwidth (20kHz) '5' for narrow bandwidth (12.5kHz)

Options

T83X-XX-**XXXX**	The Options group uses four digits and/or letters to indicate any options that may be fitted to the product. This includes standard options and special options for specific customers. '0000' indicates a standard Tait product with no options fitted. The large number of options precludes listing them here.

 Copyright TEL

1.4 Standard Product Range

The following table lists the range of standard T835 types (i.e. no options fitted) available at the time this manual was published. Consult your nearest Tait Dealer or Customer Service Organisation for more information.

Frequency Range (MHz)[a]		136-156		
IF Bandwidth (kHz)		7.5	12	15
TCXO[b]	±2.5ppm -30°C to +60°C	●	●	●
Receiver Type: T835-		15-0000	13-0000	10-0000

Frequency Range (MHz)[a]		148-174		
IF Bandwidth (kHz)		7.5	12	15
TCXO[b]	±2.5ppm -30°C to +60°C	●	●	●
Receiver Type: T835-		25-0000	23-0000	20-0000

a. Selectable by solder links and the appropriate VCO - refer to Section 3.7.

b. A TCXO with a stability of ±1ppm (0°C to +60°C) is available to suit specific requirements. Contact your nearest authorised Tait Dealer or Customer Service Organisation for further details.

You can identify the receiver type by checking the product code printed on a label on the rear of the chassis (Figure 1.1 in Part A shows typical labels). You can further verify the receiver type by checking the placement of an SMD resistor in the table that is screen printed onto the PCB (refer to Section 6.1 for more details).

Copyright TEL

2 T835 Circuit Operation

This section provides a basic description of the circuit operation of the T835 receiver.

Note: Unless otherwise specified, the term "PGM800Win" used in this and following sections refers to version 2.00 and later of the software.

Refer to Section 6 where the parts lists, grid reference index and diagrams will provide detailed information on identifying and locating components and test points on the main PCB. The parts list and diagrams for the VCO PCB are in Part E.

The following topics are covered in this section.

Section	Title	Page
2.1	**Introduction**	**2.3**
2.2	**Receiver Front End**	**2.4**
2.3	**Mixer**	**2.5**
2.4	**IF Circuitry**	**2.5**
2.5	**Noise Mute (Squelch)**	**2.6**
2.6	**Carrier Mute**	**2.6**
2.7	**Audio Processor**	**2.7**
2.8	**Power Supply And Regulators**	**2.8**
2.9	**Microcontroller**	**2.9**
2.10	**Synthesised Local Oscillator**	**2.10**
2.11	**VCO**	**2.11**
2.12	**Received Signal Strength Indicator (RSSI)**	**2.11**

Figure	Title	Page
2.1	T835 High Level Block Diagram	2.3
2.2	T835 Front End, IF and Mute Block Diagram	2.4
2.3	T835 Audio Processor Block Diagram	2.7
2.4	T835 Power Supply And Regulator Block Diagram	2.8
2.5	T835 Microcontroller Block Diagram	2.9
2.6	T835 Synthesiser Block Diagram	2.10

Copyright TEL

2.1 Introduction

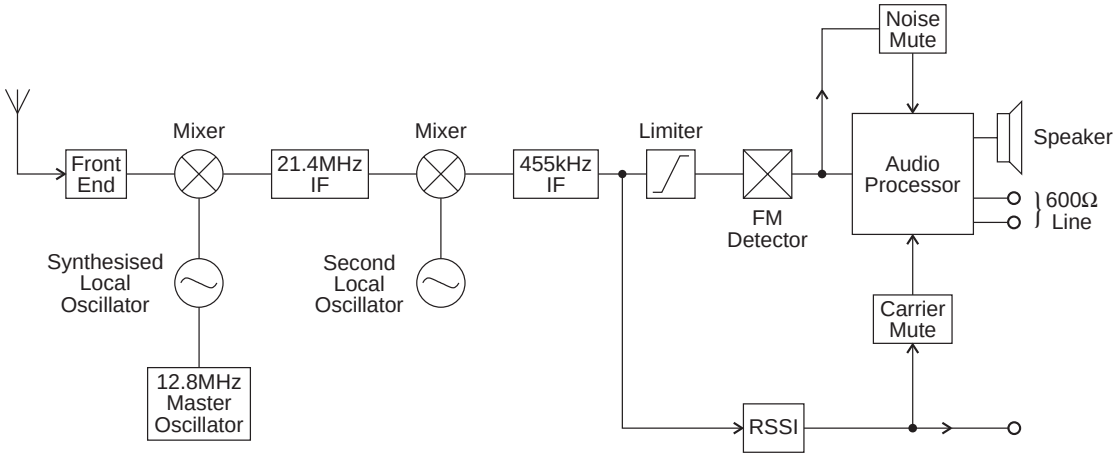

Figure 2.1 T835 High Level Block Diagram

The T835 receiver consists of a number of distinct stages:

- front end
- mixer
- synthesised local oscillator
- IF
- audio processor
- mute (squelch)
- regulator circuits
- received signal strength indicator (RSSI).

These stages are clearly identifiable in Figure 2.1. Refer to the circuit diagrams in Section 6 for further detail.

2.2 Receiver Front End

(Refer to the front end, IF section and audio processor circuit diagrams (sheets 4, 3 and 2 respectively) in Section 6.)

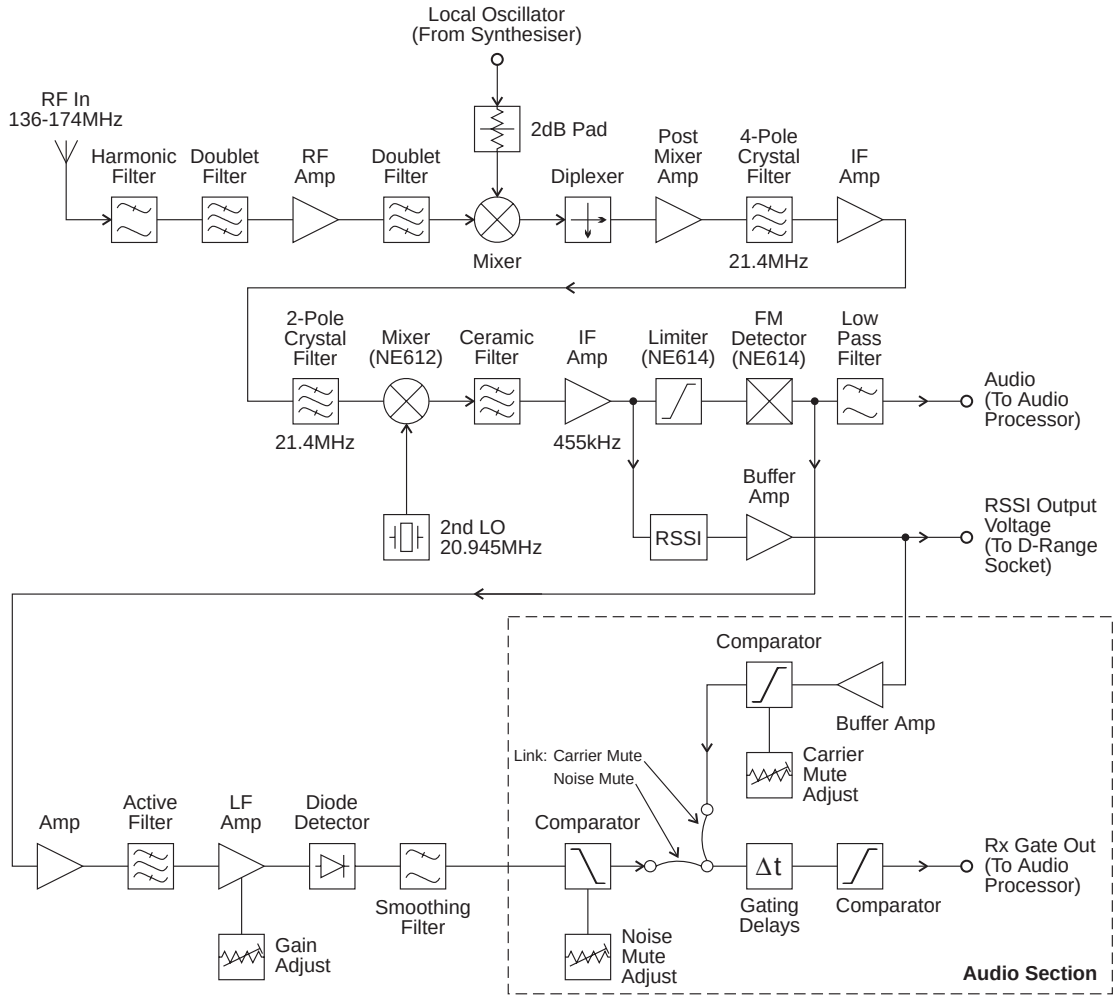

Figure 2.2 T835 Front End, IF and Mute Block Diagram

The incoming signal from the N-type antenna socket is fed through a 7-pole, low pass filter with a cut frequency of approximately 200MHz. This low loss filter (typically less than 0.5dB insertion loss over 136-174MHz) provides excellent immunity to interference from high frequency signals.

The signal is then further filtered, using a notched doublet (L410, L420) which provides exceptional image rejection, before being amplified by approximately 12dB (Q420). The signal is then passed through a further doublet (L460, L470) before being presented to the mixer.

Each sub-block within the front end has been designed with 50 ohm terminations for ease of testing and fault finding.

 Copyright TEL

2.3 Mixer

(Refer to the front end circuit diagram (sheet 4) in Section 6 and Figure 2.2.)

IC410 is a high level mixer requiring a local oscillator (LO) drive level of +17dBm (nominal). The voltage controlled oscillator (VCO) generates a level of +22dBm (typical) and this is fed to the mixer via a 2dB attenuator pad. A diplexer terminates the IF port of the mixer in a good 50 ohms, thus preventing unnecessary intermodulation distortion.

2.4 IF Circuitry

(Refer to the IF section circuit diagram (sheet 3) in Section 6 and Figure 2.2.)

Losses in the mixer are made up for in a tuned, common gate, post mixer amplifier (Q310). Several stages of amplification and filtering are employed in the IF circuitry. The first crystal filter is a 4-pole device (&XF310 and &XF320) which is matched into 50 ohms on both its input and output ports. This stage is followed by a two-stage amplifier (designed as a 50 ohm block) and second crystal filter (2 pole, &XF330), after which the signal is mixed down to 455kHz with the second local oscillator (20.945MHz) by IC340.

The 455kHz signal is filtered using a six-pole ceramic filter (&XF340) before being limited and detected.

The second IF mixer, limiter, detector and RSSI is in a 16-pin IC (IC350). Quadrature detection is employed, using L360, and the recovered audio on pin 7 of IC350 is typically 0.3V p-p for 60% system deviation.

2.5 Noise Mute (Squelch)

(Refer to the audio processor and IF section circuit diagrams (sheets 2 and 3 respectively) in Section 6 and Figure 2.2.)

The noise mute operates on the detected noise outside the audio bandwidth. An operational amplifier in IC390 is used as an active band pass filter centred on 70kHz to filter out audio components. The noise spectrum is then further amplified in a variable gain, two-stage amplifier (Q340 & Q350) with additional filtering. The noise is then rectified (D310) and filtered to produce a DC voltage proportional to the noise amplitude. The lowest average DC voltage corresponds to a high RF signal strength and the highest DC voltage corresponds to no signal at the RF input.

The rectified noise voltage is compared with a threshold voltage set up on RV230, the front panel "Gating Sensitivity" potentiometer. Hysteresis is introduced by the feedback resistor (R267) to prevent the received message from being chopped when the average noise voltage is close to the threshold. R281 and R280 determine the mute opening and closing times and, in combination with solder links SL210 and SL220, provide three time delay options (SL210 is linked as standard - refer to Section 3.8). The mute control signal at pin 7 of IC270 is used to disable the speaker and line audio outputs. The speaker output can be separately enabled for test purposes by operating the front panel mute disable switch, SW201.

2.6 Carrier Mute

(Refer to the audio processor and IF section circuit diagrams (sheets 2 and 3 respectively) in Section 6 and Figure 2.2.)

A high level carrier mute facility is also available. The RSSI (refer to Section 2.12) provides a DC voltage proportional to the signal strength. This voltage is compared with a preset level, set up on RV235, and may be linked into the mute timing circuit using PL250. PL250 selects either the noise mute or the carrier mute. From this point both the noise and carrier mute circuits operate in the same manner, using common circuitry.

 Copyright TEL

2.7 Audio Processor

(Refer to the audio processor circuit diagram (sheet 2) in Section 6.)

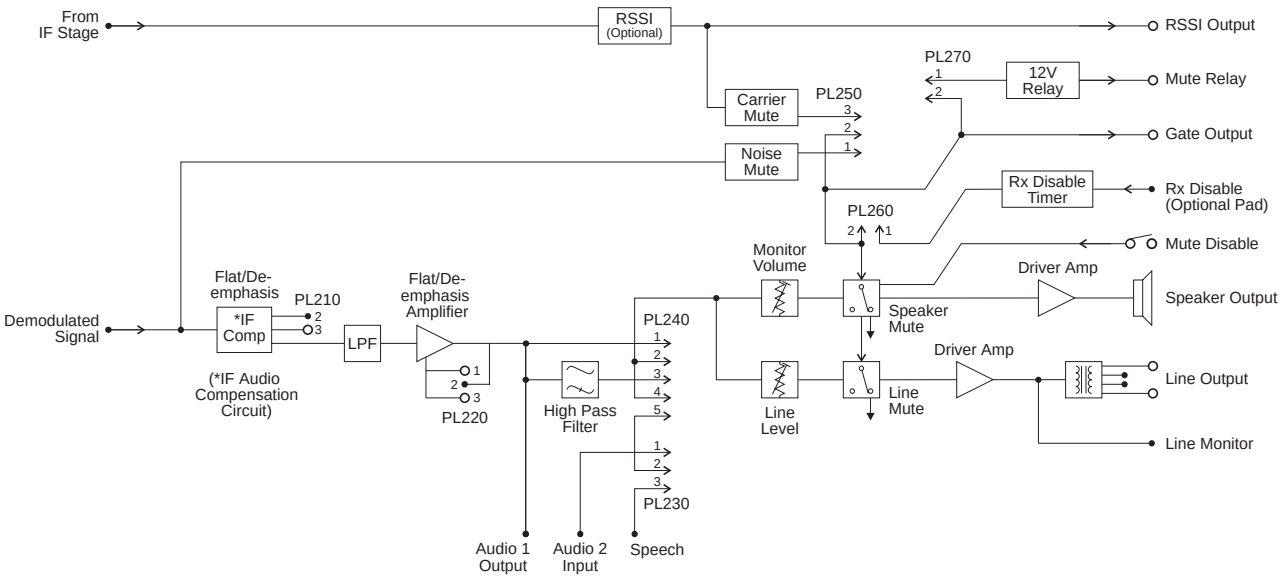

Figure 2.3 T835 Audio Processor Block Diagram

The recovered audio on pin 7 of IC350 is processed by IC390 and passed through a frequency compensation network and a third order elliptic active filter (IC210) to give the required response. Linking (PL220 & PL210) is available to give either a flat or de-emphasised audio response, with de-emphasis giving a 6dB/octave roll off. The output of IC210 is split to provide separate paths for the speaker and line outputs. The "Audio 1", Audio 2" and "Speech" lines allow access to the receiver's audio path for external signalling purposes (refer to Section 3.5).

The signals are passed to audio drive amplifiers IC240 and IC260. Under muted conditions the inputs of these amplifiers are shunted to ground via transistors Q230 and Q290 respectively. The audio output of IC240 has a DC component which is removed by C249, and this then drives a speaker directly. The output of IC260 is fed into a line transformer to provide a balanced 2-wire or 4-wire, 600 ohm output.

The speaker volume is set using the front panel "Monitor Volume" knob (RV205) and the line level is set using the recessed "Line Level" potentiometer (RV210).

The red front panel "Gate" LED (D250) indicates the status of the mute circuit. When a signal above the mute threshold is received, the LED is illuminated. The "Monitor Mute" switch (SW201) on the front panel opens the mute, allowing continuous monitoring of the audio signal (on = audio muted; off = audio unmuted).

The mute control line is available on pad 234 ("RX GATE OUT") for control of external circuitry. A high (9V) on pad 234 indicates that the audio is disabled and a low (0V) indicates that a signal above the mute threshold level is being received.

The audio can also be disabled using the "RX-DISABLE" inputs, pads 225 or 228, having connected the "RX-DISABLE" link between pins 1 & 2 of PL260. An adjustable time delay (RV220) is provided on these lines. In order to disable the audio, either pad must be pulled to 0V (refer to Section 1.4 in Part G).

An undedicated relay is provided (RL210) for transmitter keying or other functions and this can be operated from the mute line by linking PL270.

2.8 Power Supply And Regulators

(Refer to the regulators circuit diagram (sheet 6) in Section 6.)

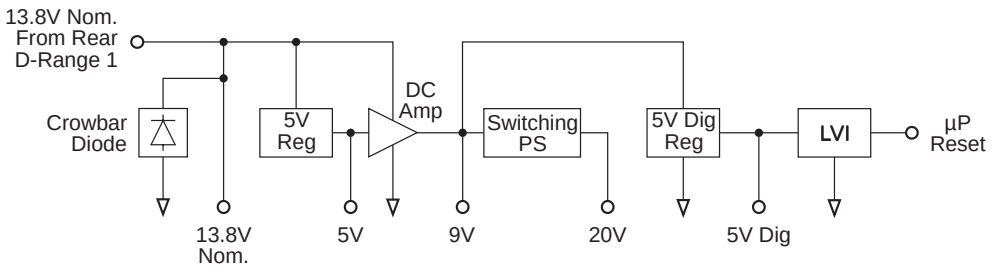

Figure 2.4 T835 Power Supply And Regulators Block Diagram

The T835 is designed to operate off a 10.8-16V DC supply (13.8V nominal). A 5.3V regulator (IC630) runs directly from the 13.8V rail, driving much of the synthesiser circuitry. It is also used as the reference for a DC amplifier (IC640, Q630 & Q620) which provides a medium current capability 9V supply.

A switching power supply, based on Q670 and Q660, runs off the 9V supply and provides a low current capability +20V supply. This is used to drive the synthesiser loop filter (IC740), giving a VCO control voltage of up to 20V.

The 13.8V supply drives both output audio amplifiers without additional regulation. A separate 5V regulator (IC610) drives the microprocessor and associated digital circuitry. The output of this regulator is monitored by the Low Voltage Interrupt (LVI) circuit (IC650).

A crowbar diode is fitted for protection against connection to a power supply of incorrect polarity. It also provides transient overvoltage protection.

Note: A fuse must be fitted in the power supply line for the diode to provide effective protection.

 Copyright TEL

2.9 Microcontroller

(Refer to the microcontroller circuit diagram (sheet 8) in Section 6.)

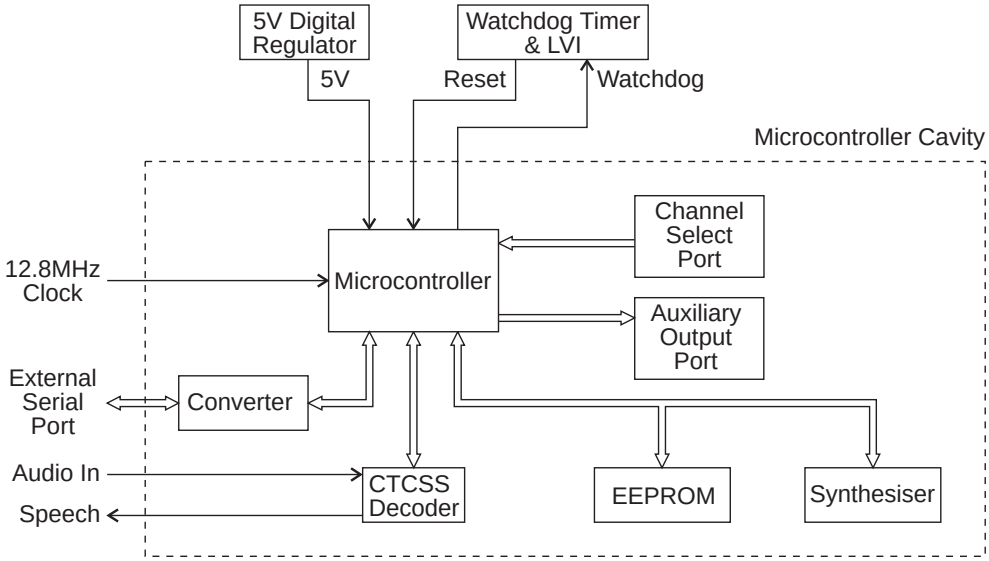

Figure 2.5 T835 Microcontroller Block Diagram

Overall system control of the T835 is accomplished by the use of a member of the 80C51 family of microcontrollers (IC810) which runs from internal ROM and RAM. Four ports are available for input/output functions.

Non-volatile data storage is achieved by serial communication with a 16kBit EEPROM (IC820). This serial bus is also used by the microcontroller to program the synthesiser (IC740).

The main tasks of the microcontroller are as follows:

- program the synthesiser;
- interface with the PGM800Win programming software at 9600 baud via the serial communication lines on D-range 1 (PL100) & D-range 2;
- monitor channel change inputs from D-range 2;
- generate timing waveforms for CTCSS detection;
- coordinate and implement timing control of the receiver;
- control the front panel "Supply" LED (refer to Section 5.3).

2.10 Synthesised Local Oscillator

(Refer to the synthesiser circuit diagram (sheet 7) in Section 6 and the VCO circuit diagram in Part E.)

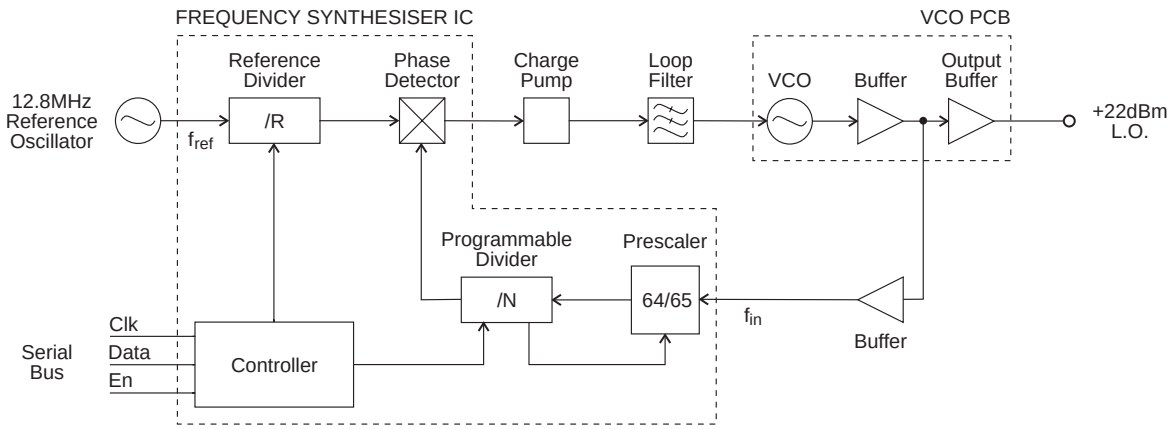

Figure 2.6 T835 Synthesiser Block Diagram

The synthesiser (IC740) employs a phase-locked loop (PLL) to lock a voltage controlled oscillator (VCO) to a given reference frequency. The synthesiser receives the divider information from the control microprocessor via a 3-wire serial bus (clock, data, enable). When the data has been latched in, the synthesiser processes the incoming signals from the VCO buffer (f_{in}) and the reference oscillator (f_{ref}).

A reference oscillator at 12.8MHz (IC700) is buffered (IC710) and divided down to 6.25kHz or 5kHz within the synthesiser IC (IC740).

A buffered output of the VCO is divided with a prescaler and programmable divider which is incorporated into the synthesiser chip (IC740). This signal is compared with the reference signal at the phase detector (also part of the synthesiser chip). The phase detector outputs drive a balanced charge pump circuit (Q760, Q770, Q775, Q780, Q785) and active loop filter (IC750, Q790) which produces a DC voltage between 0V and 20V to tune the VCO. This VCO control line is further filtered (R510, C505) to attenuate noise and other spurious signals. Note that the VCO frequency increases with increasing control voltage.

Editor's Note: The last paragraph in Section 2.10 has been deleted as it applied only to an exciter/transmitter.

 Copyright TEL

2.11 VCO

(Refer to the VCO circuit diagram in Part E.)

The VCO transistor (Q1) operates in a common source configuration, with an LC tank circuit coupled between its gate and drain to provide the feedback necessary for oscillation. The VCO control voltage from the loop filter (IC750) is applied to the varicaps (D1-D4) to facilitate tuning within a 3MHz band of frequencies. A trimcap (CV1) is used for coarse tuning of the VCO. The output from the oscillator circuit drives a cascode amplifier stage (Q2, Q3) which supplies +10dBm (typically) to a further stage of amplification, Q5. This is the final amplifier on the VCO PCB, and delivers +22dBm (typically) to the receiver mixer input pad.

A low level "sniff" is taken from the input to Q5 and used to drive the divider buffer for the synthesiser (IC740).

The VCO operates at the actual frequency required by the first mixer, i.e. there are no multiplier stages.

The VCO frequency spans from either 157-177MHz or 169-196MHz according to product type (refer to Section 1.4). The VCO is tuned to 21.4MHz above the desired receive frequency (high side injection) to produce a 21.4MHz IF signal at the output of the mixer.

2.12 Received Signal Strength Indicator (RSSI)

(Refer to the IF section circuit diagram (sheet 3) in Section 6.)

The RSSI provides a DC voltage proportional to the signal level at the receiver input and is an on-chip function of IC350. Buffering is provided by IC390 and the voltage is available at D-range 1 (PL100 pin 5).

The RSSI also provides the capability for high level signal strength muting, which may be selected on PL250 (refer to Section 3.5). The mute threshold may be set between -115dBm and -70dBm at RV235.

Copyright TEL

3 T835 Initial Tuning & Adjustment

Caution: **This equipment contains CMOS devices which are susceptible to damage from static charges. Refer to Section 1.2 in Part A for more information on anti-static procedures when handling these devices.**

The following section describes both short and full tuning and adjustment procedures and provides information on:

- channel programming
- selecting the required audio links
- synthesiser alignment
- receiver front end and IF alignment
- noise and carrier level mute adjustment
- setting the line and monitor output levels
- setting up the RSSI.

Note: Unless otherwise specified, the term "PGM800Win" used in this and following sections refers to version 2.00 and later of the software.

Refer to Figure 4.3 which shows the location of the main tuning and adjustment controls. Refer also to Section 6 where the parts lists, grid reference index and diagrams will provide detailed information on identifying and locating components and test points on the main PCB. The parts list and diagrams for the VCO PCB are in Part E.

Section	Title	Page
3.1	**Introduction**	**3.3**
3.2	**Channel Programming**	**3.3**
3.3	**Test Equipment Required**	**3.4**
3.4	**Short Tuning Procedure**	**3.5**
3.4.1	Introduction	3.5
3.4.2	Synthesiser Alignment	3.5
3.4.3	Front End Alignment	3.5
3.4.4	Mute Adjustment	3.6
3.4.4.1	Noise Mute	3.6
3.4.4.2	Carrier Level Mute	3.6
3.4.5	Line Amplifier Output	3.6
3.4.6	CTCSS	3.7
3.4.6.1	Decoder Operation	3.7
3.4.6.2	Opening Sinad	3.7
3.4.6.3	High Pass Filter	3.7
3.4.7	RSSI (If Used)	3.8

Section	Title	Page
3.5	**Audio Processor Links**	**3.8**
3.5.1	General	3.8
3.5.2	Audio Processor Linking Details For CTCSS	3.9
3.6	**Synthesiser Alignment**	**3.10**
3.7	**Alignment Of Receiver Front End And IF**	**3.10**
3.8	**Gating Delay**	**3.12**
3.9	**Noise Mute Adjustment**	**3.12**
3.10	**Carrier Level Mute**	**3.12**
3.11	**Audio Processor**	**3.13**
3.11.1	Line Amplifier Output	3.13
3.11.2	Monitor Amplifier Output (Speaker Output)	3.13
3.12	**CTCSS**	**3.13**
3.12.1	Decoder Operation	3.13
3.12.2	Opening Sinad	3.13
3.12.3	High Pass Filter	3.14
3.13	**RSSI**	**3.14**

Figure	Title	Page
3.1	T835 Test Equipment Set-up For Short Tuning Procedure	3.4
3.2	T835 Test Equipment Set-up For Full Tuning & Adjustment Procedure	3.4

 Copyright TEL

3.1 Introduction

When you receive your T835 receiver it will be run up and working on a particular frequency (the "default channel")[1]. If you want to switch to a frequency that is within the 3MHz switching range (i.e. ±1.5MHz from the factory programmed frequency), you should only need to reprogram the receiver with the PGM800Win software (refer to the PGM800Win programming kit and Section 3.2 below).

However, if you want to switch to a frequency outside the 3MHz switching range, you will have to reprogram and re-tune the receiver to ensure correct operation. In this case you should carry out the short tuning procedure described in Section 3.4.

If you have carried out repairs or other major adjustments, you must carry out the full tuning and adjustment procedure described in this section (except for Section 3.4).

3.2 Channel Programming

You can program up to 128 channel frequencies into the receiver's EEPROM memory (IC820) by using the PGM800Win software package and an IBM™ PC. You can also use PGM800Win to select the receiver's current operating frequency (or "default channel").

If the receiver is installed in a rack frame, you can program it via the programming port in the speaker panel. However, you can also program the receiver before it is installed in a rack frame as follows:

- by using a T800-01-0010 calibration test unit;
- via D-range 1;
- via D-range 2 (standard T800-03-0000 auxiliary D-range only);
- via SK805 (internal Micromatch connector).

If you do not use the T800-01-0010, you will have to connect the PC to the receiver via a module programming interface (such as the T800-01-0004).

For a full description of the channel programming procedure, refer to the PGM800Win programming software user's manual.

Note: When an auxiliary D-range kit (D-range 2 - T800-03-0000) is fitted, you can also select a channel with an external switch, such as the DIP switch on the rack frame backplane PCB. Refer to Part C in the T800 Series Ancillary Equipment Service Manual (M800-00-101 or later issue) or consult your nearest Tait Dealer or Customer Service Organisation for further details.

1. Use the "Read Module" function in PGM800Win to find out what the default channel is.

3.3 Test Equipment Required

You will need the following test equipment:

- computer with PGM800Win installed
- T800 programming kit
- module programming interface (e.g. T800-01-0004 - optional)
- 13.8V power supply
- digital multimeter
- audio signal generator
- RF signal generator
- audio voltmeter
- sinad meter

  } or RF test set (optional)

- oscilloscope
- distortion meter

  } not needed for short tuning procedure

- T800-01-0010 calibration test unit (optional)
- 4Ω speaker (not needed if the calibration test unit is used)

Figure 3.1 and Figure 3.2 show typical test equipment set-ups (with and without a T800-01-0010 calibration test unit).

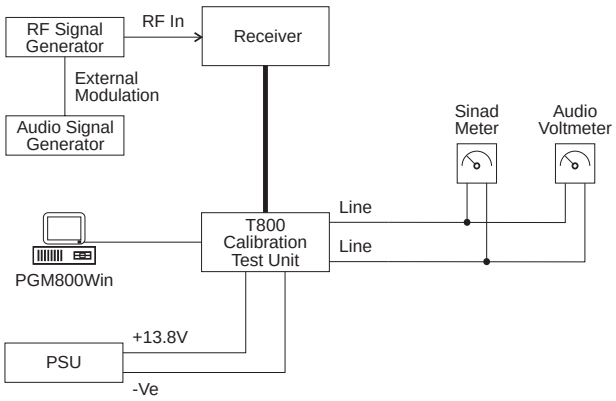

Figure 3.1 T835 Test Equipment Set-up For Short Tuning Procedure

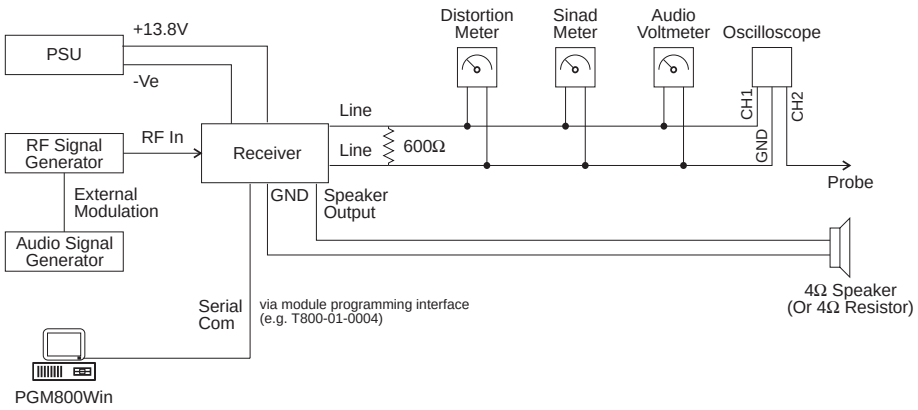

Figure 3.2 T835 Test Equipment Set-up For Full Tuning & Adjustment Procedure

 Copyright TEL

3.4 Short Tuning Procedure

Use this procedure only if you want to reprogram the receiver to a frequency outside the 3MHz switching range and do not intend to carry out any other major adjustments or repairs.

3.4.1 Introduction

Reprogram the operating frequency as described in the PGM800Win programming kit (refer to Section 3.2).

Remove the top cover (nearest the handle).

Set up the test equipment as described in Section 3.3.

Set the links in the audio processor section as required (refer to Section 3.5).

3.4.2 Synthesiser Alignment

- Connect a high impedance voltmeter to PL4-1 or the junction of L1 & R1 in the VCO (this measures the synthesiser loop voltage).
- **Single Channel** Tune VCO trimmer CV1 for a synthesiser loop voltage of 9V.

  Multichannel Tune VCO trimmer CV1 for a synthesiser loop voltage of 9V on the middle channel.

  If there is no middle channel, tune CV1 so that the channels are symmetrically placed around a loop voltage of 9V.

  All channels should lie within the upper and lower limits of 13V and 5V respectively.

  Do not attempt to program channels with a greater frequency separation than the specified switching range of 3MHz.

3.4.3 Front End Alignment

Note 1: In this and following sections deviation settings are given first for wide bandwidth sets, followed by settings in brackets for mid bandwidth sets ( ) and narrow bandwidth sets [ ].

Note 2: For multichannel operation align the receiver on a frequency in the middle of the required band.

Set RV230 (front panel gating sensitivity) fully clockwise.

Inject a strong on-channel RF signal with ±3kHz deviation (±2.4kHz) [±1.5kHz] at

1kHz into the antenna socket and adjust front end doublets L410, L420, L460 & L470 to give best sinad.

Continually decrease the RF level to maintain 12dB sinad.

Readjust L410, L420, L460 & L470 to give best sinad.

With PL210 and PL220 connected for de-emphasised audio response, the receiver sensitivity should be better than -117dBm, assuming that the audio levels are not being overdriven (refer to Section 3.4.5).

3.4.4 Mute Adjustment

Carry out the one of the following sets of instructions according to the mute option you have selected.

3.4.4.1 Noise Mute

Connect pins 1 & 2 of PL250 to enable the noise mute.

Set the RF level to -105dBm with ±3kHz deviation (±2.4kHz) [±1.5kHz] at 1kHz.

Set RV230 (front panel gating sensitivity) fully anticlockwise.

Adjust RV330 (noise mute gain) fully clockwise to close the mute (if necessary turn off the RF signal and then turn it on again).

Rotate RV330 anticlockwise until the mute just opens.

Reset the signal generator for the required opening sinad and adjust RV230 clockwise until the mute just opens.

3.4.4.2 Carrier Level Mute

Connect pins 2 & 3 of PL250 to enable the carrier mute and disable the noise mute.

Apply an on-channel signal from the RF generator at the required mute opening level with ±3kHz deviation (±2.4kHz) [±1.5kHz] at 1kHz.

Adjust RV235 (carrier mute) anticlockwise to close the mute (if necessary, momentarily turn off the RF), then slowly adjust it clockwise until the mute just opens. The mute should now open at this preset level.

3.4.5 Line Amplifier Output

Apply an on-channel signal from the RF generator at a level of -70dBm with ±3kHz deviation (±2.4kHz) [±1.5kHz] at 1kHz.

Adjust RV210 (front panel line level) to set the line level to the required output level.

 Copyright TEL

3.4.6 CTCSS

3.4.6.1 Decoder Operation

Program a CTCSS tone on the set channel using PGM800Win.

Set the RF signal generator output to -70dBm.

Modulate the generator with both:

- a 1kHz tone at ±3kHz deviation (±2.4kHz) [±1.5kHz];
- and a CTCSS tone at the programmed frequency at ±500Hz deviation (±400Hz) [±300Hz].

Check that the receiver gate opens and the front panel "Gate" LED is on.

3.4.6.2 Opening Sinad

Adjust RV230 (front panel gating sensitivity) fully clockwise.

Reduce the RF signal level to -110dBm.

Observe the sinad meter and reduce the RF level until the receiver mute closes.

Slowly increase the signal level until the receiver mute just opens and stays open.

With PL240 pins 1 & 2 linked (high pass filter bypassed), check that the sinad is less than 6dB.

Reset the signal generator for the required opening sinad, adjust RV230 fully anti-clockwise, then clockwise until the mute just opens.

3.4.6.3 High Pass Filter

Set the audio processor links as follows:

Plug	Link	Function
PL210	1 - 2	de-emphasised response
PL230	2 - 3	audio from internal CTCSS speech filter
PL240	4 - 5	audio input via PL230 or I/O pad

Reset the RF signal generator output to -70dBm and note the line level (measurement A).

Reduce the 1kHz generator to zero output and measure the line level again (measurement B).

Check that measurement B is at least 30dB below measurement A.

3.4.7 RSSI (If Used)

Align the receiver as instructed in Section 3.6 and Section 3.7.

Apply an on-channel signal from the RF generator at a level of -100dBm with ±3kHz deviation (±2.4kHz) [±1.5kHz] at 1kHz.

Adjust RV320 (RSSI level) to give 4.5V RSSI output on pin 5 of D-range 1 (PL100) when measured with a high impedance DMM.

3.5 Audio Processor Links

3.5.1 General

Use the following table to set up the audio processor to the configuration you require. You should set the audio processor links before carrying out the receiver alignment. The factory settings are shown in brackets [ ].

Plug	Link	Function
PL210	[1 - 2] 2 - 3	de-emphasised response flat response
PL220	1 - 2 [2 - 3]	flat response de-emphasised response
PL230[a]	1 - 2 [2 - 3] 3 - 4	audio input via AUDIO-2 pad audio from internal CTCSS speech filter audio input via I/O pad P250
PL240[a]	1 - 2 [2 - 3] or 3 - 4 4 - 5	bypass high pass filter 300Hz high pass filter in circuit audio input via PL230 or I/O pad
PL250	[1 - 2] 2 - 3	noise mute carrier mute
PL260[b]	1 - 2 [2 - 3]	RX-DISABLE link not connected
PL270	[1 - 2] 2 - 3	relay link not connected

a. Refer to Section 3.5.2 for further details.

b. Refer to Section 1.4 in Part G for further details.

 Copyright TEL

3.5.2 Audio Processor Linking Details For CTCSS

You must connect the audio processor links correctly according to the CTCSS option used, as shown in the table below.

CTCSS Option	PL230	PL240
standard, no CTCSS	2 - 3	2 - 3
received CTCSS + speech passed to line output	3 - 4	1 - 2
high pass filtered speech, internal CTCSS detection	2 - 3	4 - 5
external CTCSS detection	1 - 2	4 - 5

The conditions stated in the above table are defined as follows:

- standard, no CTCSS
  - no CTCSS or other sub-audio signalling used
  - audio bandwidth 300Hz to 3kHz
  - hum & noise -55dB
- received CTCSS tone + speech to line output
  - tone and speech transmitted down 600 ohm line
  - audio bandwidth 10Hz to 3kHz
  - hum & noise -45dB
- high pass filtered speech + internal CTCSS detection
  - 400Hz to 3kHz
  - hum & noise -30dB with 250.3Hz tone present
- external CTCSS detection
  - decoding performed through the receiver (but externally)
  - speech injected back into receiver via "AUDIO-2" and sent down 600 ohm line

Note 1: AUDIO-2 is available on D-range 1 (PL100) pin 7 via the link resistor R160. Although PL100 pin 7 is already assigned to SERIAL-COM, this can be disabled by removing R808.

Note 2: External CTCSS units can connect in series with the audio chain via AUDIO-1 and AUDIO-2.

3.6 Synthesiser Alignment

- Ensure that the receiver has been programmed with the required frequencies using PGM800Win software.
- Connect a high impedance voltmeter to PL4-1 or the junction of L1 & R1 in the VCO (this measures the synthesiser loop voltage).
- **Single Channel** Tune VCO trimmer CV1 for a synthesiser loop voltage of 9V.

  Multichannel Tune VCO trimmer CV1 for a synthesiser loop voltage of 9V on the middle channel.

  If there is no middle channel, tune CV1 so that the channels are symmetrically placed around a loop voltage of 9V.

  All channels should lie within the upper and lower limits of 13V and 5V respectively.

  Do not attempt to program channels with a greater frequency separation than the specified switching range of 3MHz.
- The TCXO (IC700) output frequency should be trimmed when the IF is tuned - refer to Section 3.7.

3.7 Alignment Of Receiver Front End And IF

Note 1: In this and following sections deviation settings are given first for wide bandwidth sets, followed by settings in brackets for mid bandwidth sets ( ) and narrow bandwidth sets [ ].

Note 2: **Frequency Range**

136-156MHz: **Check that links SL405 to SL440 and link B in the front end are bridged with solder.**

148-174MHz: **Check that link A is bridged with solder and links SL405 to SL440 and link B are not connected.**

VCO: **The correct VCO is fitted at the factory. If you change the operating frequency range of the receiver, make sure you also fit the correct VCO for that frequency range.**

Align the synthesiser as instructed in Section 3.6. For multichannel operation align the receiver on a frequency in the middle of the required band.

Set RV230 (front panel gating sensitivity) fully clockwise.

Inject a strong on-channel RF signal with ±3kHz deviation (±2.4kHz) [±1.5kHz] at 1kHz into the antenna socket and adjust front end doublets L410, L420, L460 & L470 to give best sinad.

 Copyright TEL

Continually decrease the RF level to maintain 12dB sinad.

Roughly tune IF coils L330/L340/L350, CV318 and quad coil L360 for best sinad.

While maintaining a low level unmodulated RF input to the receiver, loosely couple into the first IF an additional high level signal at 21.4MHz - you will hear a beat note.

Trim the synthesiser TCXO (IC700) for zero beat.

Note: If a second oscillator is not available, you can connect a frequency counter to IC710 pin 8 (i.e. after the TCXO buffer) via an oscilloscope probe to measure the TCXO frequency directly (12.8MHz). At this point the voltage level is approximately 4V p-p.

Readjust L410, L420, L460 & L470 to give best sinad.

Change the RF signal level to -75dBm and modulate with ±3kHz deviation (±2.4kHz) [±1.5kHz] at 1kHz.

Connect an oscilloscope probe to the RSSI test point (TP310) and connect plugs PL210 and PL220 to give a flat audio response (refer to Section 3.5).

Readjust IF coils L330/L340/L350, CV318 and quad coil L360 to give a maximum amplitude response on the oscilloscope with minimal amplitude modulation.

Note: If you would like a more accurate method of tuning the IF, refer to the sweep tuning method described in Section 5.5.5.

Further adjust these coils, along with L360, for minimum audio distortion, ensuring that the 455kHz level (on the oscilloscope) does not fall significantly.

Check that the distortion reading is:

wide bandwidth	≤2%
mid bandwidth	≤4%
narrow bandwidth	≤4%.

Reconnect plugs PL210 and PL220 to give a de-emphasised audio response (if required) and reduce the RF level until 12dB sinad is reached. The receiver sensitivity should be better than -117dBm, assuming that the audio levels are not being overdriven (refer to Section 3.11).

3.8 Gating Delay

Two solder links (SL210 & SL220) are provided on the bottom of the PCB to allow three gate delay time options, as shown in the table below.

SL210	SL220	Closing Delay
linked	not linked	<50ms*
not linked	linked	<25ms
not linked	not linked	<20ms

*Factory setting.

3.9 Noise Mute Adjustment

Connect pins 1 & 2 of PL250 to enable the noise mute.

Align the receiver as instructed in Section 3.6 and Section 3.7.

Set the RF level to -105dBm with ±3kHz deviation (±2.4kHz) [±1.5kHz] at 1kHz.

Set RV230 (front panel gating sensitivity) fully anticlockwise.

Adjust RV330 (noise mute gain) fully clockwise to close the mute (if necessary turn off the RF signal and then turn it on again).

Rotate RV330 anticlockwise until the mute just opens.

Reset the signal generator for the required opening sinad and adjust RV230 clockwise until the mute just opens.

3.10 Carrier Level Mute

Connect pins 2 & 3 of PL250 to enable the carrier mute and disable the noise mute.

Apply an on-channel signal from the RF generator at the required mute opening level with ±3kHz deviation (±2.4kHz) [±1.5kHz] at 1kHz.

Adjust RV235 (carrier mute) anticlockwise to close the mute (if necessary, momentarily turn off the RF), then slowly adjust it clockwise until the mute just opens. The mute should now open at this preset level.

 Copyright TEL

3.11 Audio Processor

3.11.1 Line Amplifier Output

Apply an on-channel signal from the RF generator at a level of -70dBm with ±3kHz deviation (±2.4kHz) [±1.5kHz] at 1kHz.

Adjust RV210 (front panel line level) to give an output of +10dBm on the 600 ohm line.

Check for any clipping or distortion on the oscilloscope.

Set the line level to the required output level.

3.11.2 Monitor Amplifier Output (Speaker Output)

Adjust RV205 (front panel monitor volume) to give an output of 2V rms into a 4 ohm resistive load.

Check for any clipping or distortion on the oscilloscope.

Switch to a 4 ohm speaker and adjust RV205 to the required level.

3.12 CTCSS

3.12.1 Decoder Operation

Program a CTCSS tone on the default channel using PGM800Win.

Set the RF signal generator output to -70dBm.

Modulate the generator with both:

- a 1kHz tone at ±3kHz deviation (±2.4kHz) [±1.5kHz];
- and a CTCSS tone at the programmed frequency at ±500Hz deviation (±400Hz) [±300Hz].

Check that the receiver gate opens and the front panel "Gate" LED is on.

3.12.2 Opening Sinad

Adjust RV230 (front panel gating sensitivity) fully clockwise.

Reduce the RF signal level to -110dBm.

Observe the sinad meter and reduce the RF level until the receiver mute closes.

Slowly increase the signal level until the receiver mute just opens and stays open.

With PL240 pins 1 & 2 linked (high pass filter bypassed), check that the sinad is less than 6dB.

Reset the signal generator for the required opening sinad, adjust RV230 fully anti-clockwise, then clockwise until the mute just opens.

3.12.3 High Pass Filter

Set the audio processor links as follows:

Plug	Link	Function
PL210	1 - 2	de-emphasised response
PL230	2 - 3	audio from internal CTCSS speech filter
PL240	4 - 5	audio input via PL230 or I/O pad

Reset the RF signal generator output to -70dBm and note the line level (measurement A).

Reduce the 1kHz generator to zero output and measure the line level again (measurement B).

Check that measurement B is at least 30dB below measurement A.

3.13 RSSI

Align the receiver as instructed in Section 3.6 and Section 3.7.

Apply an on-channel signal from the RF generator at a level of -100dBm with ±3kHz deviation (±2.4kHz) [±1.5kHz] at 1kHz.

Adjust RV320 (RSSI level) to give 4.5V RSSI output on pin 5 of D-range 1 (PL100) when measured with a high impedance DMM.

 Copyright TEL

4 T835 Functional Testing

Caution: **This equipment contains CMOS devices which are susceptible to damage from static charges. Refer to Section 1.2 in Part A for more information on anti-static procedures when handling these devices.**

The following test procedures will confirm that the T835 has been tuned and adjusted correctly and is fully operational.

Note 1: In this and following sections deviation settings are given first for wide bandwidth sets, followed by settings in brackets for mid bandwidth sets ( ) and narrow bandwidth sets [ ].

Note 2: Unless otherwise specified, the term "PGM800Win" used in this and following sections refers to version 2.00 and later of the software.

Refer to Figure 4.3 for the location of the main tuning and adjustment controls, and to Section 3.3 for the test equipment set-up. Refer also to Section 6 where the parts lists, grid reference index and diagrams will provide detailed information on identifying and locating components and test points on the main PCB. The parts list and diagrams for the VCO PCB are in Part E.

The following topics are covered in this section.

Section	Title	Page
4.1	Current Consumption	4.3
4.2	Sensitivity	4.3
4.3	Switching Range	4.3
4.4	Audio Distortion	4.4
4.5	Ultimate Signal-To-Noise Ratio	4.4
4.6	De-emphasised Audio Frequency Response	4.5
4.7	Noise Mute (If Linked In)	4.6
4.8	RSSI	4.6
4.9	Carrier Level Mute (Carrier Mute Linked In)	4.7

Editor's Note: The CTCSS adjustment procedures described in Section 4.10 have been moved to a more appropriate location in Section 3 as part of the Initial Tuning & Adjustment procedure (refer to Section 3.4.6 and Section 3.12).

Figure	Title	Page
4.1	T835 De-emphasised Audio Frequency Response	4.5
4.2	T835 RSSI Voltage vs Signal Strength	4.6
4.3	T835 Main Tuning & Adjustment Controls	4.9

 Copyright TEL

4.1 Current Consumption

Connect the T835 to a 13.8V power supply.

Rotate RV230 (front panel gating sensitivity) anticlockwise until the "Gate" LED is extinguished.

Set switch SW201 (front panel monitor mute) to the ***on*** position.

Check that the current in the 13.8V power cable is less than 350mA.

Rotate the RV230 clockwise until the "Gate" LED is lit.

Rotate RV210 (front panel line level) and RV205 (front panel monitor volume) to give maximum outputs.

Check that the current is less than 800mA.

Reset the front panel controls to the required settings.

4.2 Sensitivity

If CTCSS is enabled, disable the CTCSS tone by either programming the T835 for "No Tone" on the set channel, or by pulling pin 10 of D-range 2 (CTCSS ENABLE) low.

Apply an on-channel signal from the RF generator with ±3kHz deviation (±2.4kHz) [±1.5kHz] at 1kHz.

Adjust the RF level to give 12dB audio sinad.

Check that the sensitivity is -117dBm or better.

4.3 Switching Range

Apply an on-channel signal from the RF generator at various frequencies within the 3MHz switching range (front end bandwidth), corresponding to pre-programmed channels.

Measure the sensitivity at each frequency as described in Section 4.2.

Ensure that the sensitivity is -115dBm or better across the whole switching range.

4.4 Audio Distortion

The level of distortion measured at the line output (refer to Figure 1.3 in Part F) gives an indication of the accuracy of the IF alignment.

Apply an accurate on-channel signal from the RF generator at a level of -70dBm with ±3kHz deviation (±2.4kHz) [±1.5kHz] at 1kHz.

Adjust RV210 (front panel line level) to give +10dBm into 600 ohms.

Check that the distortion is approximately 1% THD.

Note: For a flat response, the distortion should always be better than 2% for wide bandwidth sets or 4% for mid and narrow bandwidth sets.

Adjust RV205 (front panel monitor volume) to give 2V rms into a 4 ohm resistive load.

Check that the distortion at the monitor output is better than 2% THD.

Reset the controls before proceeding to the next set of tests.

4.5 Ultimate Signal-To-Noise Ratio

Apply a signal from the RF generator at a level of -57dBm with ±3kHz deviation (±2.4kHz) [±1.5kHz] at 1kHz.

Select de-emphasis on the links provided in the audio processor (refer to Section 3.5), and link pins 2 & 3 of PL240 to include the 300Hz filter.

Adjust RV210 (front panel line level) to provide +10dBm output.

Switch off the modulation, checking that the residual noise is lower than -45dBm (-43dBm) [-39dBm] at the line output (this corresponds to S/N of 55dB (53dB) [49dB] and is in accordance with EIA measurement conditions).

Note: You can make the measurement without the 300Hz high pass filter, but the result will be 10dB worse.

 Copyright TEL

4.6 De-emphasised Audio Frequency Response

Set RV210 (front panel line level) to provide 0dBm output at 1kHz modulating frequency.

Sweep the modulating frequency, checking that the line audio response closely follows that shown in Figure 4.1 - the limits should not be exceeded.

Wide Bandwidth

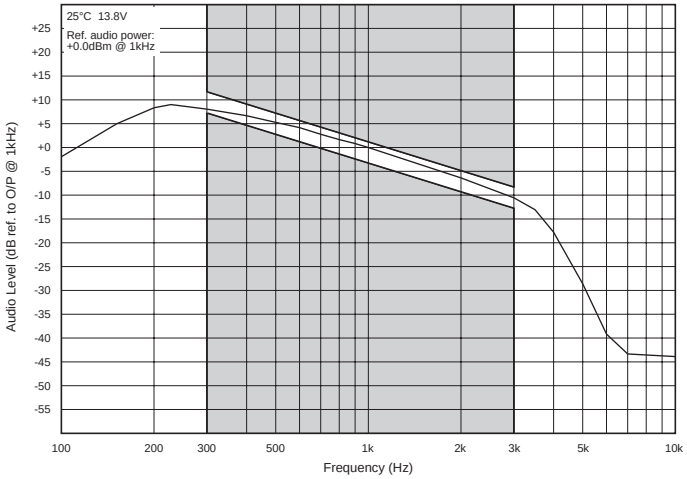

Mid Bandwidth

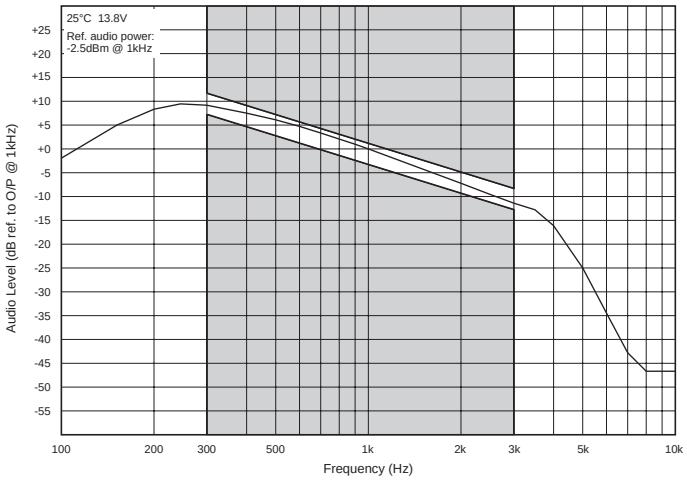

Narrow Bandwidth

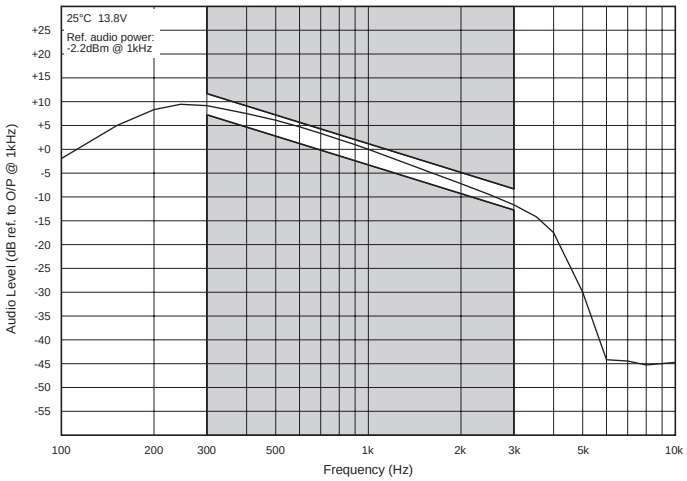

Figure 4.1 T835 De-emphasised Audio Frequency Response

4.7 Noise Mute (If Linked In)

Rotate RV230 (front panel gating sensitivity) fully anticlockwise.

Apply an on-channel signal from the RF generator at a level of -110dBm with ±3kHz deviation (±2.4kHz) [±1.5kHz] at 1kHz.

Increase the RF level in 1dB steps, checking that the mute opens for an RF input level of approximately -105dBm.

Turn the RF off and check that the mute closes.

Rotate RV230 clockwise and check that the mute opens.

Reset RV230 to give the required opening sinad.

Note: False opening of the mute can occur if the RF generator's attenuator is noisy when the level is being changed.

4.8 RSSI

Apply an on-channel signal from the RF generator at a level of -100dBm with ±3kHz deviation (±2.4kHz) [±1.5kHz] at 1kHz.

Using a high impedance DMM, check that the RSSI output voltage on pin 5 of D-range 1 (PL100) is 4.5V (nominal).

Vary the RF level in 5dB steps and check that the RSSI output voltage changes at a rate of approximately 15dB/V over the range of -115dBm to -70dBm (refer to Figure 4.2 for RSSI voltage vs signal strength).

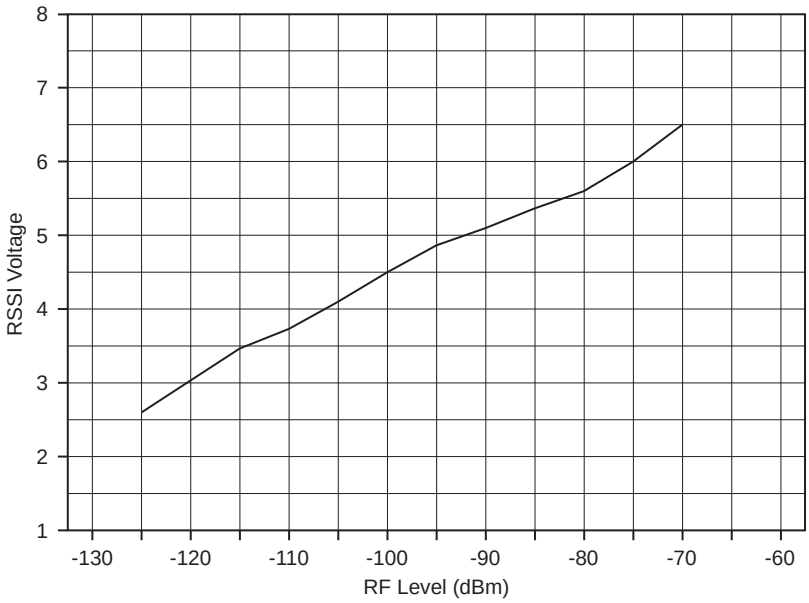

Figure 4.2 T835 RSSI Voltage vs Signal Strength

 Copyright TEL

4.9 Carrier Level Mute (Carrier Mute Linked In)

Apply an on-channel signal from the RF generator at a level of -120dBm with ±3kHz deviation (±2.4kHz) [±1.5kHz] at 1kHz.

Increase the RF level in 2dB steps and check that the mute opens at an RF level which corresponds with the preset level on RV235 (carrier mute), i.e. between -115dBm and -70dBm.

Editor's Note:	The CTCSS adjustment procedures described in Section 4.10 have been moved to a more appropriate location in Section 3 as part of the Initial Tuning & Adjustment procedure (refer to Section 3.4.6 and Section 3.12).

Copyright TEL

5 T835 Fault Finding

Caution: **This equipment contains CMOS devices which are susceptible to damage from static charges. Refer to Section 1.2 in Part A for more information on anti-static procedures when handling these devices.**

The following test procedures and fault finding flow charts may be used to help locate a hardware problem, however they are by no means a complete fault finding procedure. If you still cannot trace the fault after progressing through them in a logical manner, contact your nearest Tait Dealer or Customer Service Organisation. If necessary, you can get additional technical help from Customer Support, Radio Systems Division, Tait Electronics Ltd, Christchurch, New Zealand (full contact details are on page 2).

Note 1: In this and following sections deviation settings are given first for wide bandwidth sets, followed by settings in brackets for mid bandwidth sets ( ) and narrow bandwidth sets [ ].

Note 2: Unless otherwise specified, the term "PGM800Win" used in this and following sections refers to version 2.00 and later of the software.

Refer to Section 6 where the parts lists, grid reference index and diagrams will provide detailed information on identifying and locating components and test points on the main PCB. The parts list and diagrams for the VCO PCB are in Part E.

The following topics are covered in this section.

Section	Title	Page
5.1	**Visual Checks**	**5.3**
5.2	**Component Checks**	**5.3**
5.3	**Front Panel LED Indicator**	**5.3**
5.4	**DC Checks**	**5.4**
5.4.1	Power Rails	5.4
5.4.2	VCO Locking	5.4
5.4.3	Mute Operation	5.4
5.5	**RF Checks**	**5.5**
5.5.1	VCO Frequency	5.5
5.5.2	RF Sensitivity	5.5
5.5.3	Oscillator Stability	5.6
5.5.3.1	TCXO	5.6
5.5.3.2	Second IF	5.6
5.5.4	Demodulator Output	5.6
5.5.5	IF Distortion	5.7

Section	Title	Page
5.6	**PGM800Win Generated Errors**	**5.8**
5.7	**Fault Finding Charts**	**5.9**
5.7.1	Microcontroller	5.9
5.7.1.1	Basic Checks	5.9
5.7.1.2	Serial Communication	5.10
5.7.1.3	CTCSS Decode	5.11
5.7.2	Regulator	5.12
5.7.3	Synthesiser	5.13
5.7.4	Noise Mute	5.16
5.7.5	Carrier Mute	5.17
5.7.6	Receiver	5.18
5.7.7	Audio	5.19

Figure	Title	Page
5.1	RF Test Cable	5.5
5.2	IF Swept Response	5.7
5.3	Ceramic Filter Swept Response	5.7

 Copyright TEL

5.1 Visual Checks

Remove the covers from the T835 and inspect the PCB for damaged or broken components, paying particular attention to the surface mounted devices (SMDs).

Check for defective solder joints. If repair or replacement of components is considered necessary, refer to Section 3 of Part A.

5.2 Component Checks

If you suspect a transistor is faulty, you can assess its performance by measuring the forward and reverse resistance of the junctions. Unless the device is completely desoldered, first make sure that the transistor is not shunted by some circuit resistance. Use a good quality EVM (e.g. Fluke 75) for taking the measurements (or a 20k ohm/V or better multimeter, using only the medium or low resistance ranges).

The collector current drawn by multi-junction transistors is a further guide to their performance.

If an IC is suspect, the most reliable check is to measure the DC operating voltages. Due to the catastrophic nature of most IC failures, the pin voltages will usually be markedly different from the recommended values in the presence of a fault. The recommended values can be obtained from either the circuit diagram or the component data catalogue.

5.3 Front Panel LED Indicator

The green "Supply" LED on the receiver front panel will flash according to the conditions described in the following table:

Flash Rate		Condition
fast	(⅓ sec. on/⅓ sec. off approx.)	receiver is linked with PGM800Win
slow	(1 sec. on/1 sec. off approx.)	VCO is out of lock - refer to Section 5.4.2
unequal	(⅓ sec. on/1 sec. off approx.)	microcontroller has detected an internal communications error - refer to Section 5.7.1

Where two or more conditions occur at the same time, the precedence is in the order shown above (i.e. receiver linked has the highest priority, followed by VCO error, then internal error).

5.4 DC Checks

5.4.1 Power Rails

Refer to the test points & options diagrams in Section 6 for test point locations, and to the regulator fault finding chart (Section 5.7.2) for fault diagnosis.

Check the 9V (TP602) and 13.8V (TP601) power supply test points in the regulator compartment with a DMM.

Check the 20V regulator output at the test point (TP603) in the regulator compartment.

Check the 5V regulator output at the test point (TP604) in the regulator compartment and on IC350 pin 4.

Check the 5V digital regulator output at the junction of C611A (+) and IC610 pin 2 in the regulator compartment.

5.4.2 VCO Locking

Using a DMM, monitor the VCO control voltage at PL4-1 or the junction of L1 & R1 on the VCO PCB.

If the synthesiser is locked and the VCO aligned, the voltage at this point should be between 5 and 13V.

If the VCO is not locked, refer to the synthesiser fault finding charts (Section 5.7.3).

5.4.3 Mute Operation

The front panel "Gate" LED will show the status of the mute circuitry and will turn on when a signal is received above the threshold level.

Check that PL250 is linked correctly:

noise mute	1-2
carrier mute	2-3.

Check that the mute gate opens as follows:

noise mute -	rotate RV230 (front panel gating sensitivity) fully clockwise and check that the front panel "Gate" LED turns on;
carrier mute -	rotate RV235 (carrier mute) fully clockwise and check that the front panel "Gate" LED turns on.

If the mute fails to operate correctly, refer to the noise mute fault finding chart (Section 5.7.4) or the carrier mute fault finding chart (Section 5.7.5).

 Copyright TEL

5.5 RF Checks

5.5.1 VCO Frequency

Check that the VCO is phase locked (refer to Section 5.4.2).

Connect a frequency counter (level +19dBm) to the VCO input to the mixer (IC410).

Monitor the local oscillator frequency and check that it is 21.4MHz ***above*** the required receive frequency.

Refer to the synthesiser fault finding charts (Section 5.7.3) for further information.

5.5.2 RF Sensitivity

Ensure that the VCO is on the correct frequency and the receiver correctly aligned.

Check that links SL405 to SL440 and link B in the front end are set correctly for the operating frequency (refer to Section 3.7).

Check that the 12dB sinad sensitivity into the front end is as follows:

-117dBm (de-emphasised response)
-111dBm (flat response).

If the sensitivity is poor, you can trace the fault by measuring the sensitivity into successive circuit blocks. Prepare a test cable by connecting a 1nF capacitor to the end of a length of coax cable as shown in Figure 5.1.

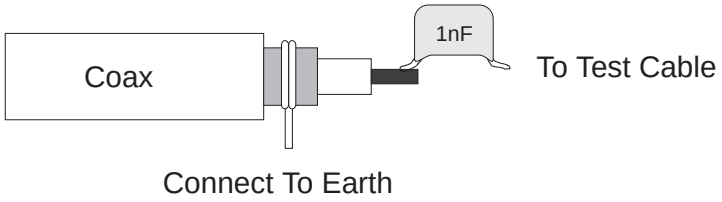

Figure 5.1 RF Test Cable

Note: Before using the test cable, ensure the coax braid is connected to an earth point on the PCB.

Using the RF test cable, apply a modulated 21.4MHz signal to the test breaks in the IF section, or an on-channel RF signal to the front end test breaks.

Check that the sensitivity at each test break is within 2dB of the levels shown on the circuit diagram.

Poor sensitivity indicates a fault in one of the circuit blocks following the test break.

Note: Poor sensitivity into the mixer can be caused by lack of drive level from the VCO (the drive level should be >+17dBm).

Refer to the receiver fault finding charts (Section 5.7.6) for further information.

5.5.3 Oscillator Stability

5.5.3.1 TCXO

While maintaining a low level unmodulated RF input to the receiver, loosely couple into the first IF an additional high level signal at 21.4MHz - you should now hear a constant low frequency beat note.

Tap the TCXO with a finger and replace it if the beat note permanently changes.

5.5.3.2 Second IF

While maintaining a low level unmodulated RF input to the receiver, loosely couple into the second IF an additional high level signal at 455kHz - you should now hear a constant low frequency beat note.

Adjust the frequency of the 455kHz signal for zero beat.

If the second IF is more than 300Hz off frequency, check IC340, X310, C345 and C347 and replace if necessary.

5.5.4 Demodulator Output

Apply an on-channel RF signal modulated by 1kHz with ±3kHz (±2.4kHz) [±1.5kHz] deviation at an amplitude of -65dBm.

Connect an oscilloscope probe (DC coupled) to IC350 pin 7 (audio output).

Check that an audio signal of approximately 380mV peak to peak is present.

With the audio response set to flat, optimum tuning of the quad coil (L360) for minimum audio distortion should coincide with maximum audio amplitude and a DC level of approximately 1.3V.

 Copyright TEL

5.5.5 IF Distortion

If the audio distortion is still high after careful IF alignment (Section 3.7), sweep the IF to investigate the bandpass response.

Apply an on-channel RF signal modulated at 10Hz (sine wave) with approximately ±12kHz (±9kHz) [±6kHz] deviation at an amplitude of -80dBm.

Connect the modulating 10Hz audio signal to the "X" input of an oscilloscope and observe the 455kHz IF input to IC350 pin 16 via a suitable RF probe on the "Y" input. Alternatively, use an oscilloscope probe for the "Y" input to monitor the RSSI output voltage at TP310 (RSSI test point) or pin 5 of D-range 1 (PL100). This will give a demodulated log response and only the top half of the wave forms shown in Figure 5.2 and Figure 5.3 will be displayed on the oscilloscope screen.

Note: The X input should be DC coupled.

Check that the swept response has a rounded top and no sharp non-linearities (refer to Figure 5.2).

Increase the RF level to -50dBm; the trace will now show the shape of the 455kHz ceramic filter (&XF340).

Check that the response has no sharp non-linearities.

If sharp non-linearities do occur, replace the filter and sweep again to confirm a satisfactory solution (refer to Figure 5.3).

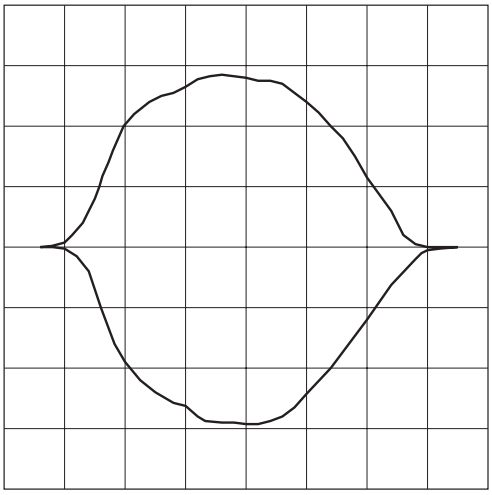

Figure 5.2 IF Swept Response

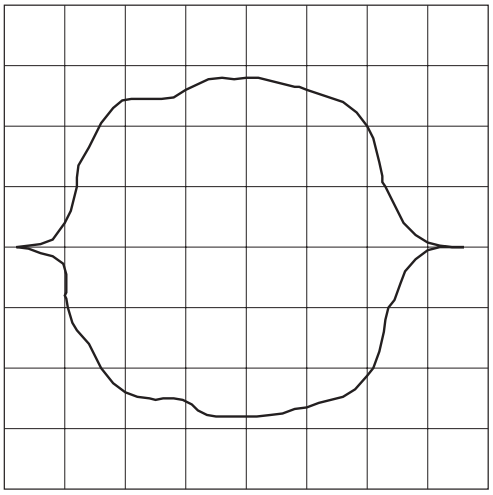

Figure 5.3 Ceramic Filter Swept Response

5.6 PGM800Win Generated Errors

The following errors are those most likely to occur using PGM800Win. Refer to the PGM800Win software user's manual for a complete list of error messages.

Channel Switch Set

The programmed default channel was not accepted by the base station because a channel is selected externally. Try turning the external channel switch off before changing the default channel in PGM800Win.

Synth Out Of Lock

The synthesiser received incorrect data, or the data was corrupted. Enter a frequency within the VCO switching range, or tune the VCO.

Internal Error

Data could not be read from the base station due to an internal error. Check for shorts or open circuits on the SDA, SCK, SYNTH and EPOT lines. The SDA, SCK and SYNTH are normally high.

Write/Read To An Unlinked Module

The link to the module does not exist. Undefined error.

 Copyright TEL

5.7 Fault Finding Charts

Note: The standard test point designations used in this section are as follows:

TP601	13.8V
TP602	9V
TP603	20V
TP604	5V

5.7.1 Microcontroller (IC810)

5.7.1.1 Basic Checks

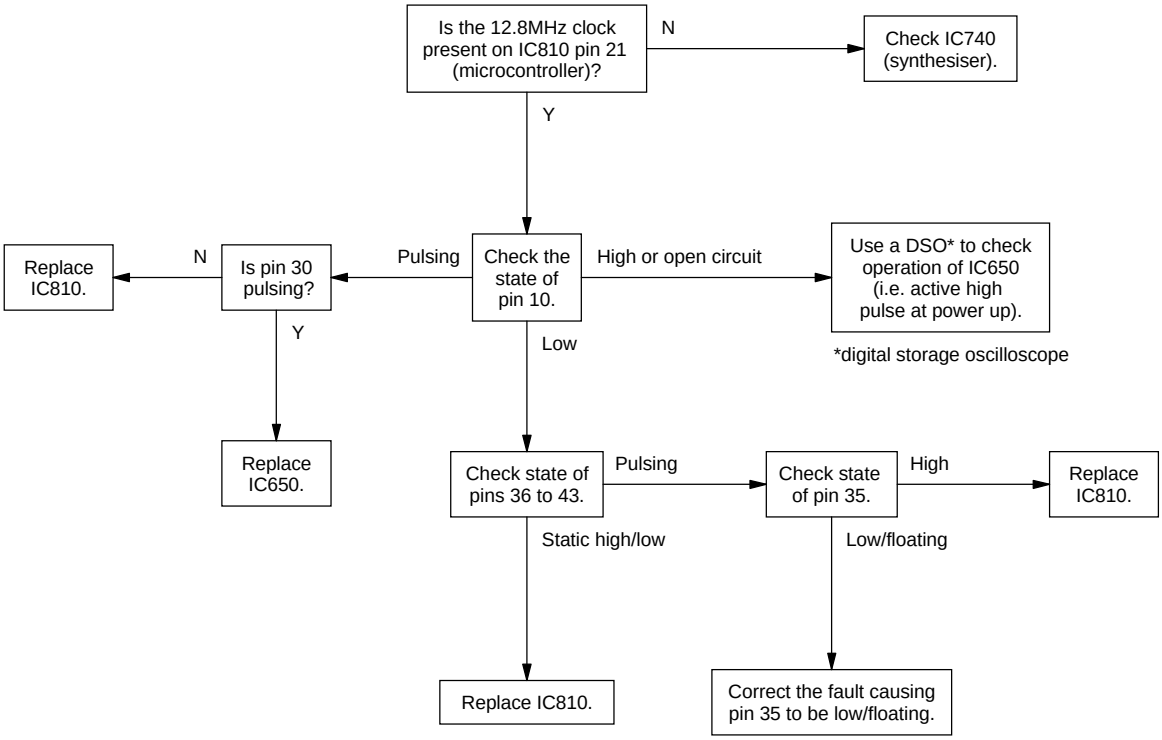

5.7.1.2 Serial Communication

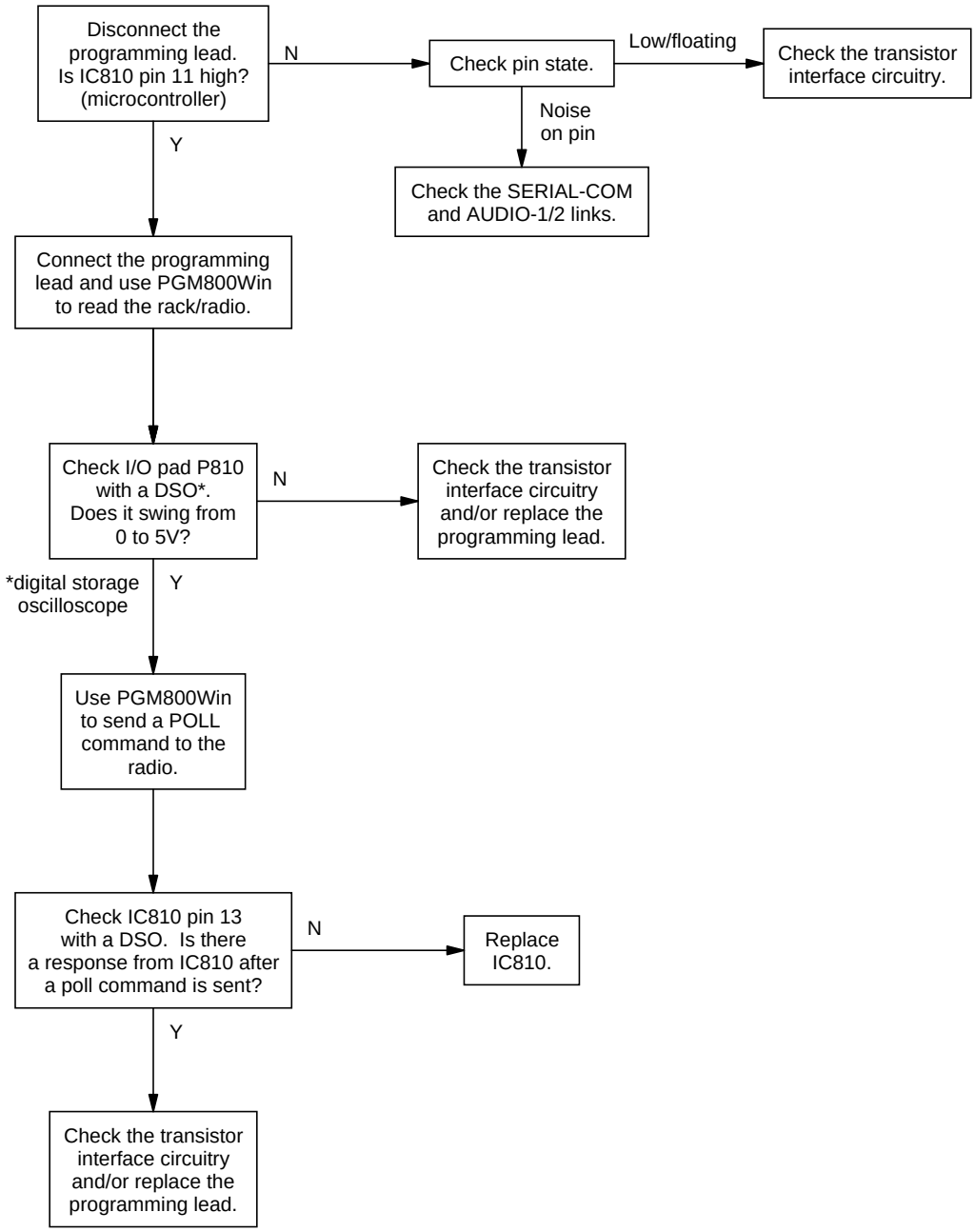

 Copyright TEL

5.7.1.3 CTCSS Decode

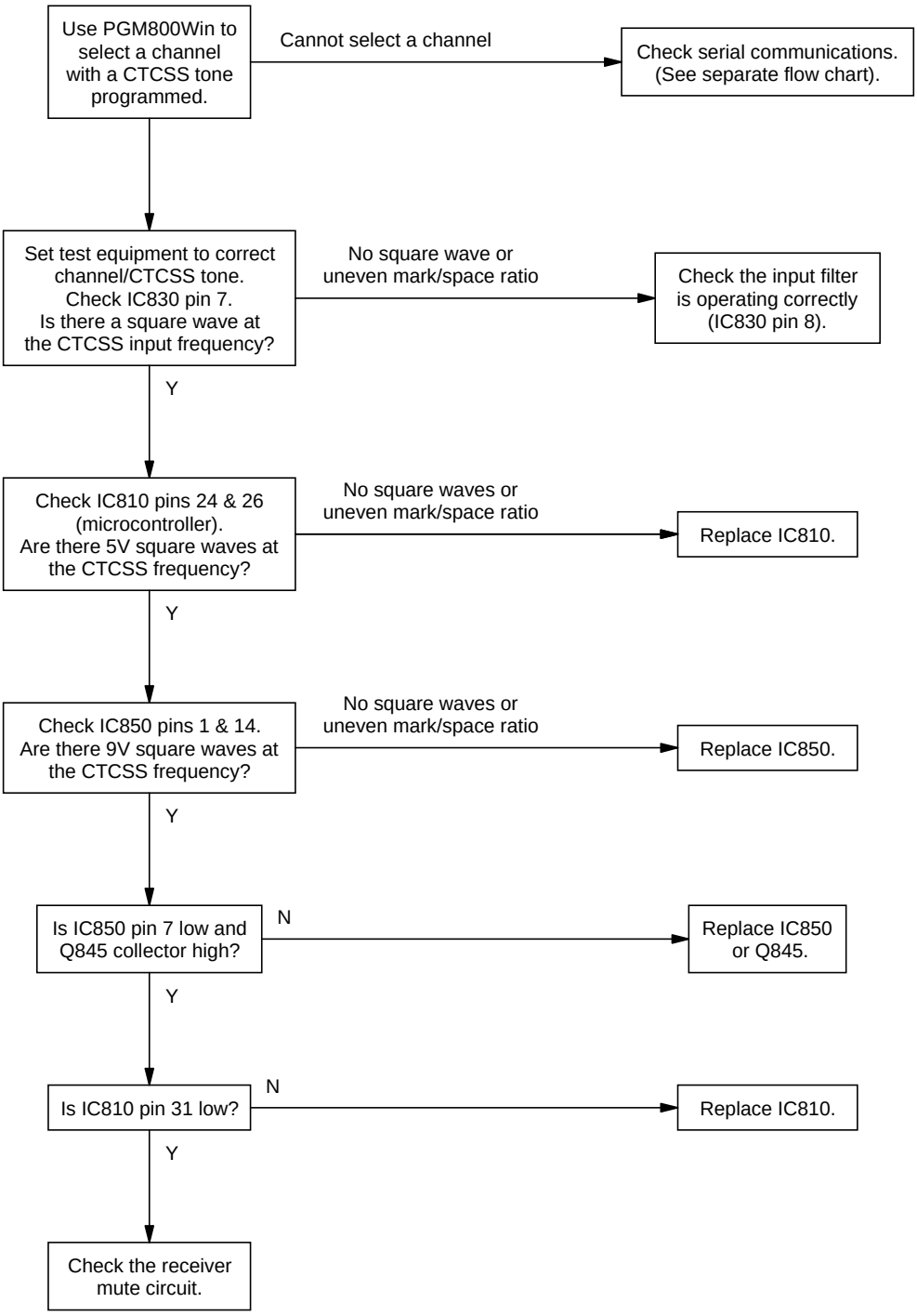

5.7.2 Regulator

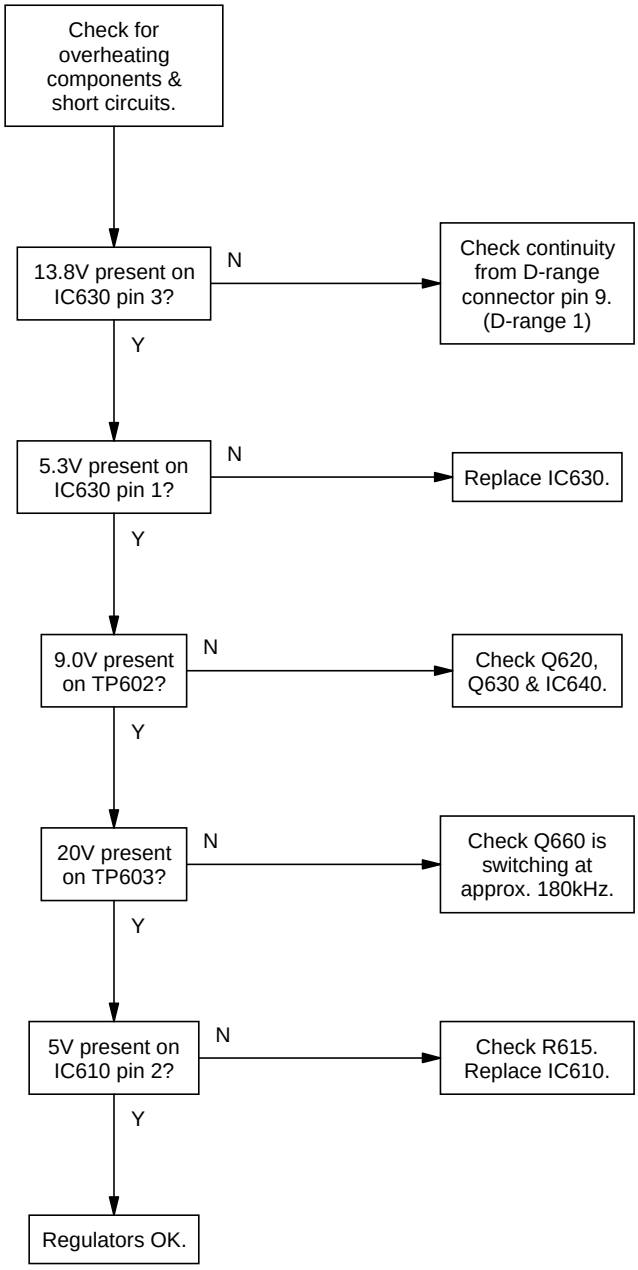

 Copyright TEL

5.7.3 Synthesiser

Refer to the synthesiser circuit diagram (sheet 7) in Section 6 and the VCO circuit diagram in Part E.

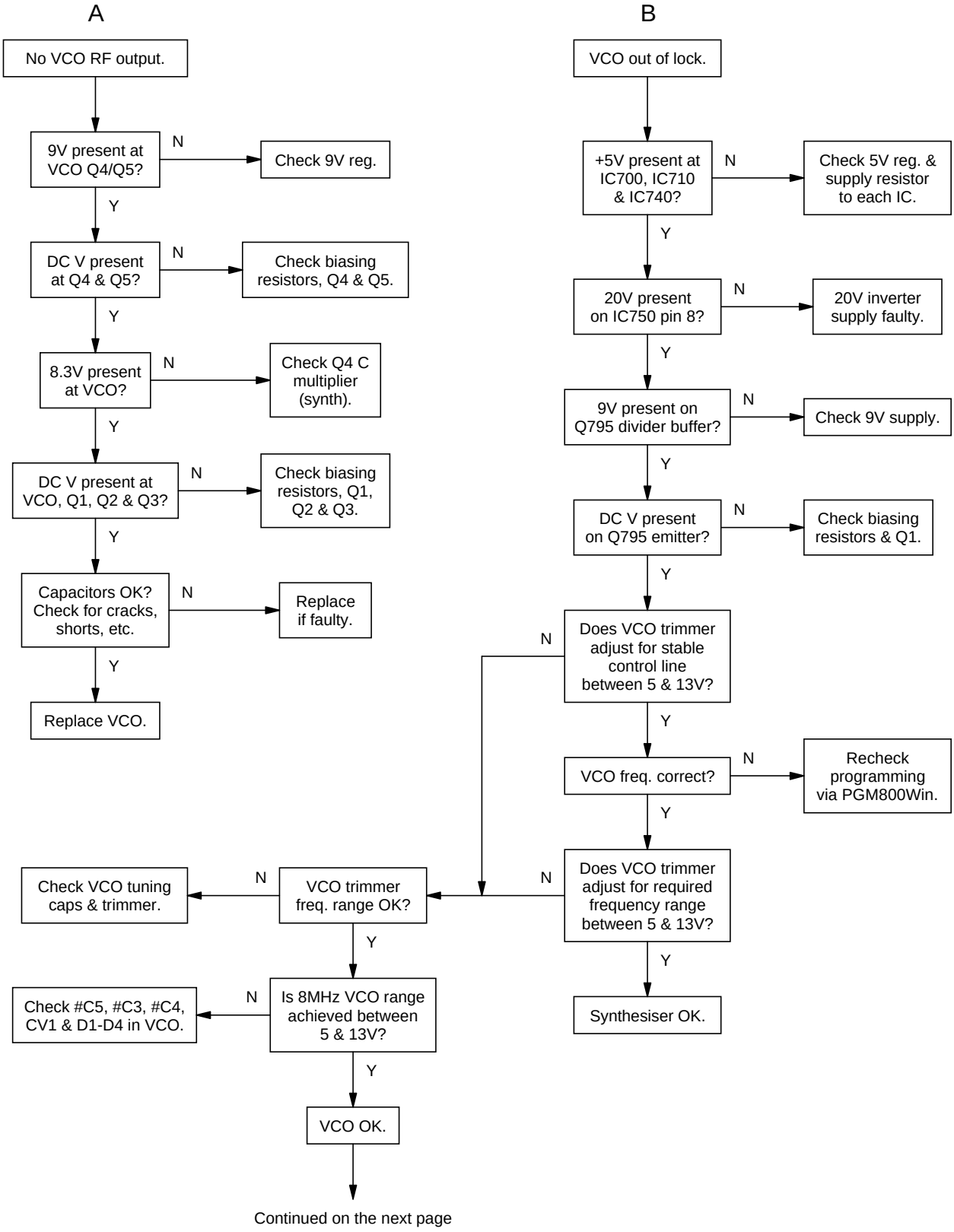

Continued on the next page

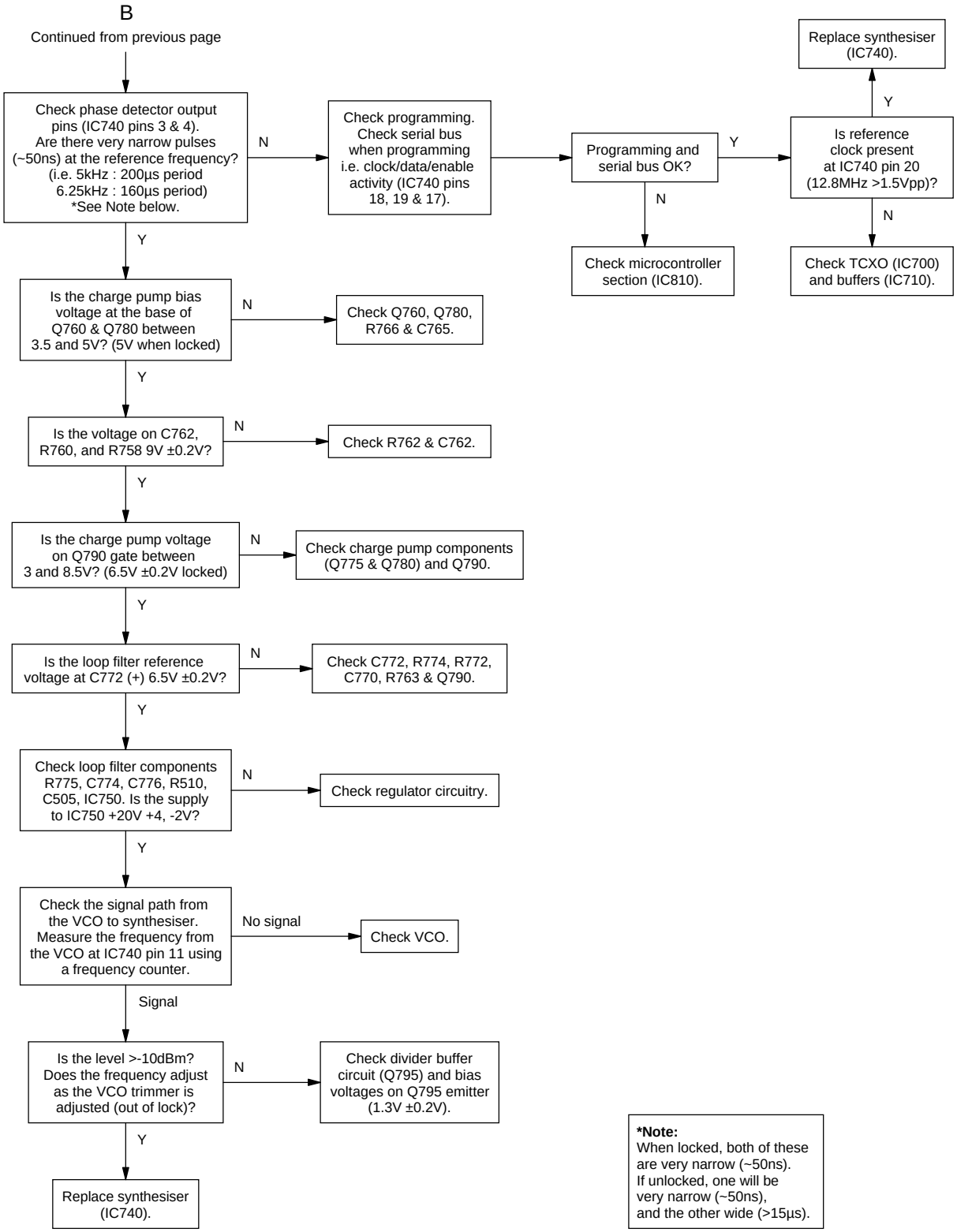

 Copyright TEL

C

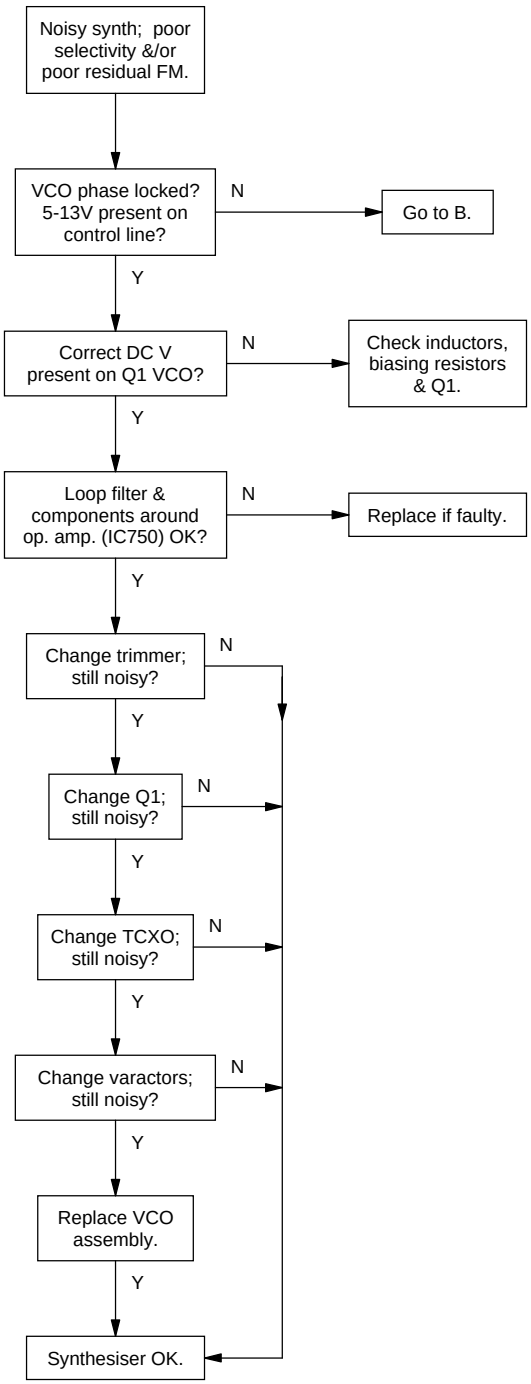
Noisy synth; poor selectivity &/or poor residual FM.
VCO phase locked? 5-13V present on control line?
N
Go to B.
Y
Correct DC V present on Q1 VCO?
N
Check inductors, biasing resistors & Q1.
Y
Loop filter & components around op. amp. (IC750) OK?
N
Replace if faulty.
Y
Change trimmer; still noisy?
N
Y
Change Q1; still noisy?
N
Y
Change TCXO; still noisy?
N
Y
Change varactors; still noisy?
N
Y
Replace VCO assembly.
Y
Synthesiser OK.

5.7.4 Noise Mute

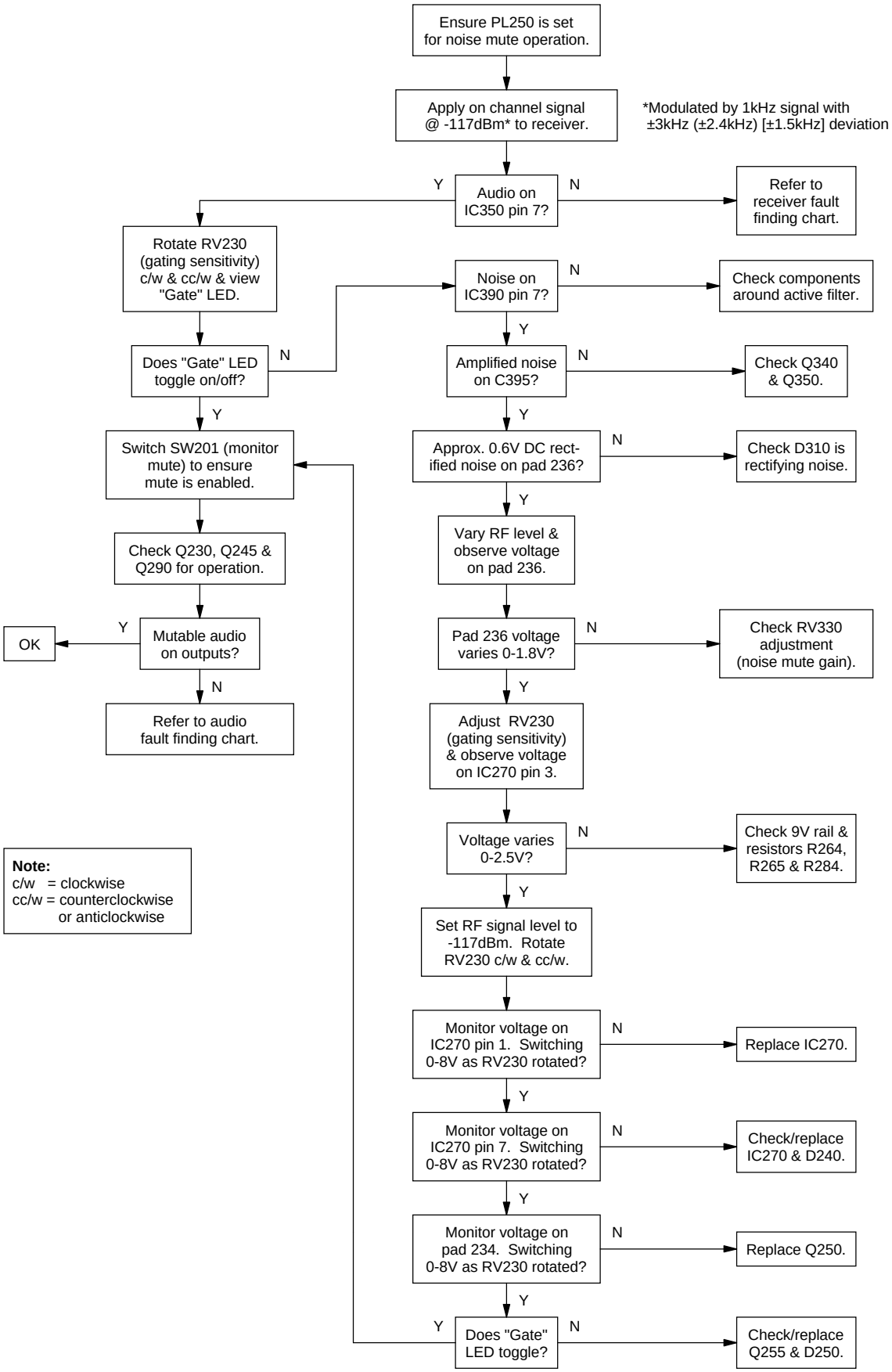

 Copyright TEL

5.7.5 Carrier Mute

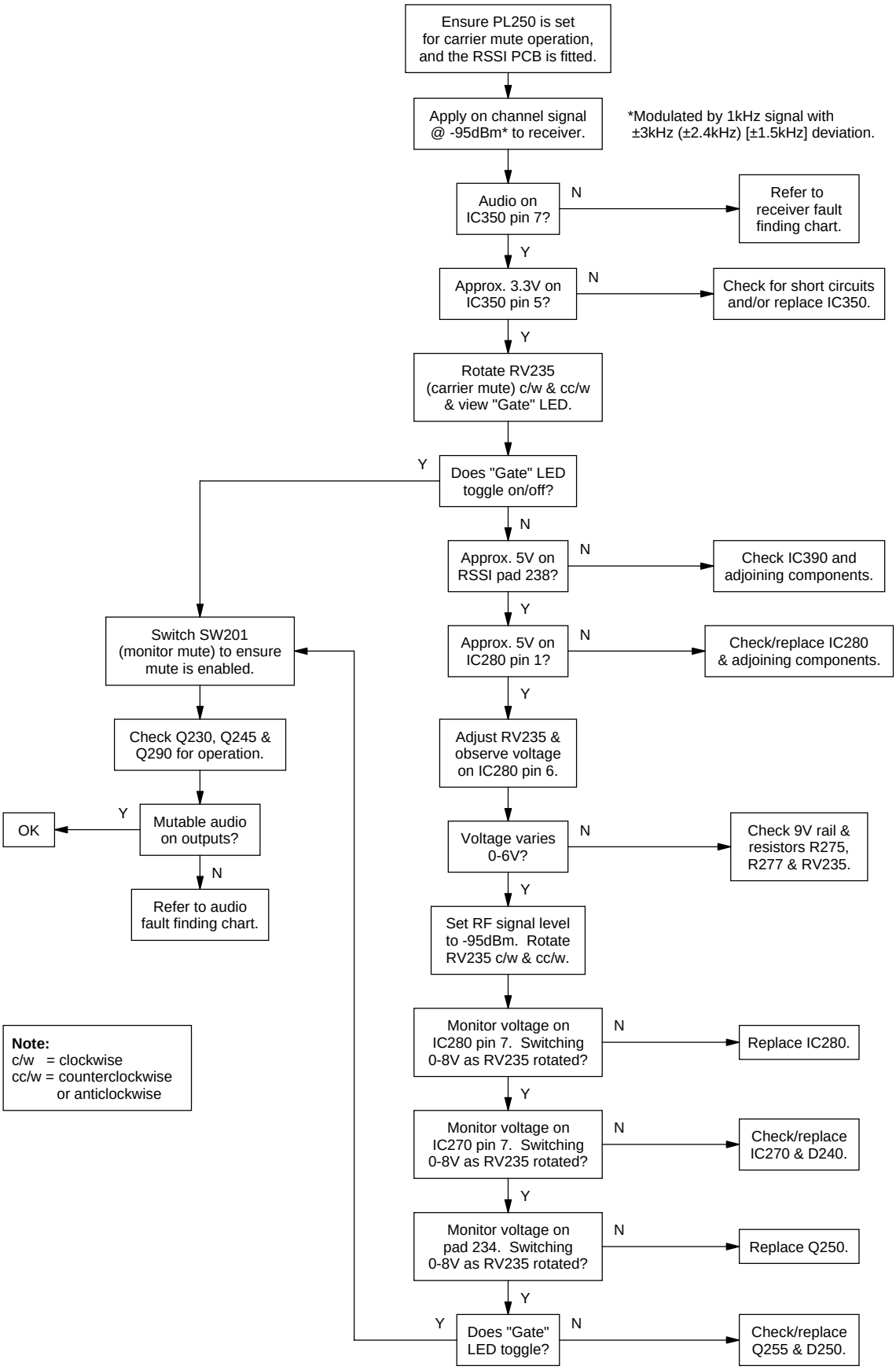

5.7.6 Receiver

Refer to the receiver IF and front end circuit diagrams (sheets 3 & 4) in Section 6.

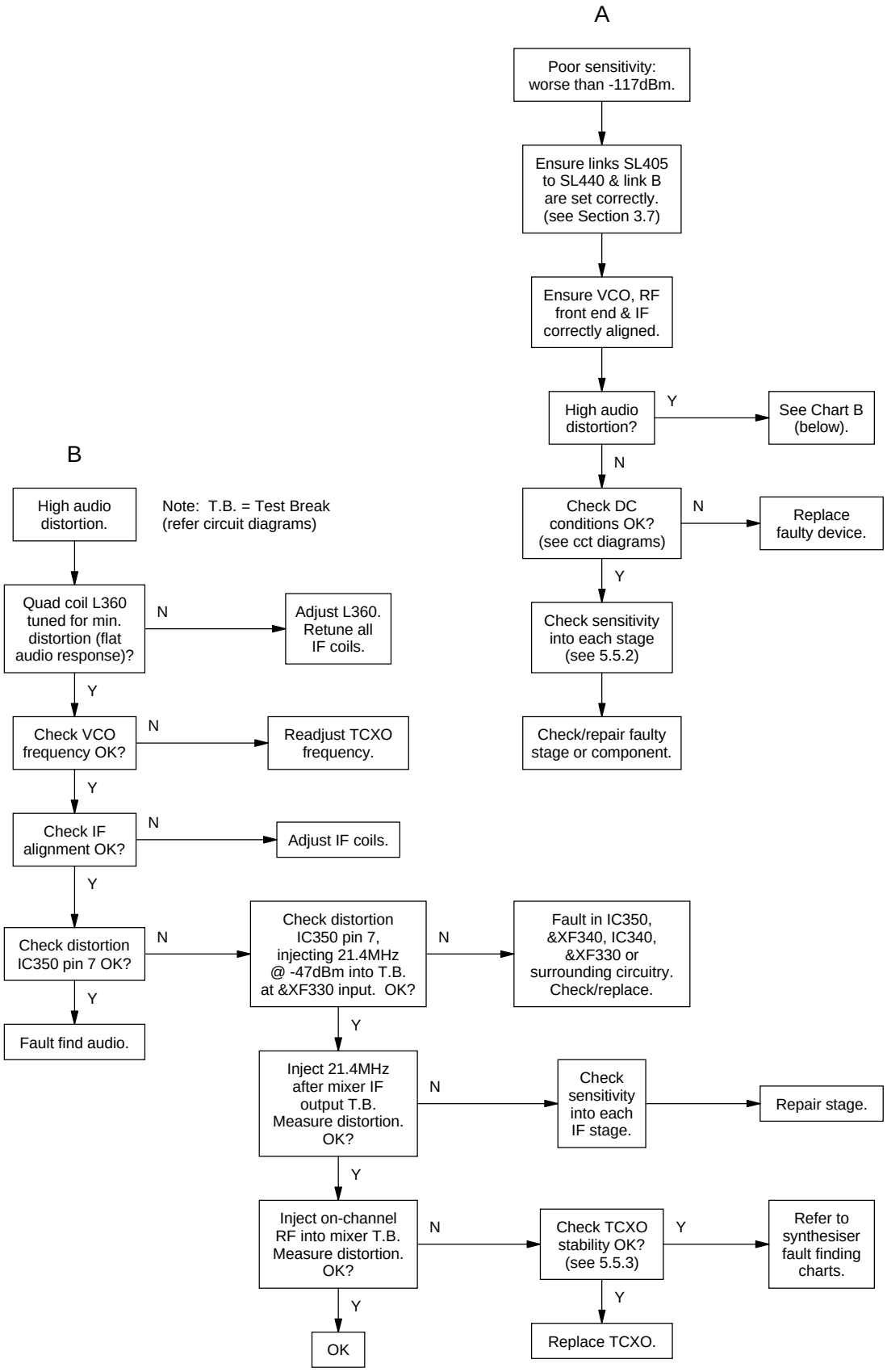

 Copyright TEL

5.7.7 Audio

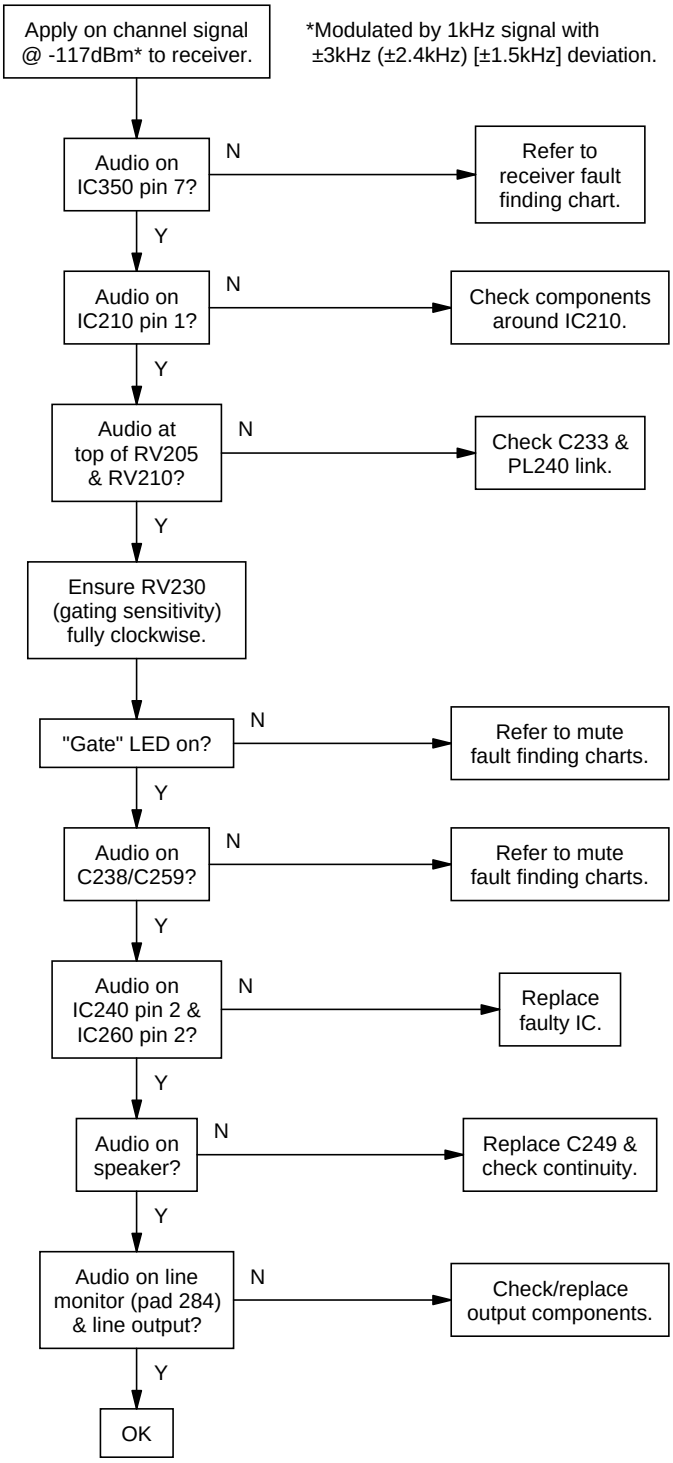
Apply on channel signal @ -117dBm* to receiver.
*Modulated by 1kHz signal with ±3kHz (±2.4kHz) [±1.5kHz] deviation.
Audio on IC350 pin 7?
N
Refer to receiver fault finding chart.
Y
Audio on IC210 pin 1?
N
Check components around IC210.
Y
Audio at top of RV205 & RV210?
N
Check C233 & PL240 link.
Y
Ensure RV230 (gating sensitivity) fully clockwise.
"Gate" LED on?
N
Refer to mute fault finding charts.
Y
Audio on C238/C259?
N
Refer to mute fault finding charts.
Y
Audio on IC240 pin 2 & IC260 pin 2?
N
Replace faulty IC.
Y
Audio on speaker?
N
Replace C249 & check continuity.
Y
Audio on line monitor (pad 284) & line output?
N
Check/replace output components.
Y
OK

Copyright TEL

6 T835 PCB Information

Caution: **This equipment contains CMOS devices which are susceptible to damage from static charges. Refer to Section 1.2 in Part A for more information on anti-static procedures when handling these devices.**

This section provides the following information on the T835 receiver:

- parts lists
- grid reference index
- mechanical assembly drawing
- PCB layouts
- test points & options connections drawings
- circuit diagrams.

Section	Title	IPN	Page
6.1	Introduction		6.1.3
6.2	T835 Receiver PCB	220-01394-02	6.2.1

Copyright TEL

6.1 Introduction

Product Type Identification

You can identify the receiver type by checking the product code printed on a label on the rear of the chassis (product codes are explained in Section 1.3 in this Part of the manual, and Figure 1.1 in Part A shows typical labels). You can further verify the receiver type by checking the placement of an SMD resistor in the table that is screen printed onto the top side of the PCB, similar to the example drawn below (this table also appears in the resist layer on the bottom side of the PCB). In this example, the resistor indicates that the product was built as a T835-10-XXXX.

835-	
835-	
835-	
PRODUCT TYPE	

PRODUCT TYPE	
835-10	835-20
835-13	835-23
835-15	835-25

Note: The only function of this resistor is to indicate the product type. It has no effect on the circuitry or operation of the receiver.

PCB Identification

All PCBs are identified by a unique 10 digit "internal part number" (IPN), e.g. 220-12345-00, which is screen printed onto the PCB (usually on the top side), as shown in the example below:

The last 2 digits of this number define the issue status, which starts at 00 and increments through 01, 02, 03, etc. as the PCB is updated. Some issue PCBs never reach full production status and are therefore not included in this manual. A letter following the 10 digit IPN has no relevance in identifying the PCB for service purposes.

Note: It is important that you identify which issue PCB you are working on so that you can refer to the appropriate set of PCB information.

Parts Lists

The 10 digit numbers (000-00000-00) in this Parts List are “internal part numbers” (IPNs). We can process your spare parts orders more efficiently and accurately if you quote the IPN and provide a brief description of the part.

The components listed in this parts list are divided into two main types: those with a circuit reference (e.g. C2, D1, R121, etc.) and those without (miscellaneous and mechanical).

Those with a circuit reference are grouped in alphabetical order and then in numerical order within each group. Each component entry comprises three or four columns, as shown below:

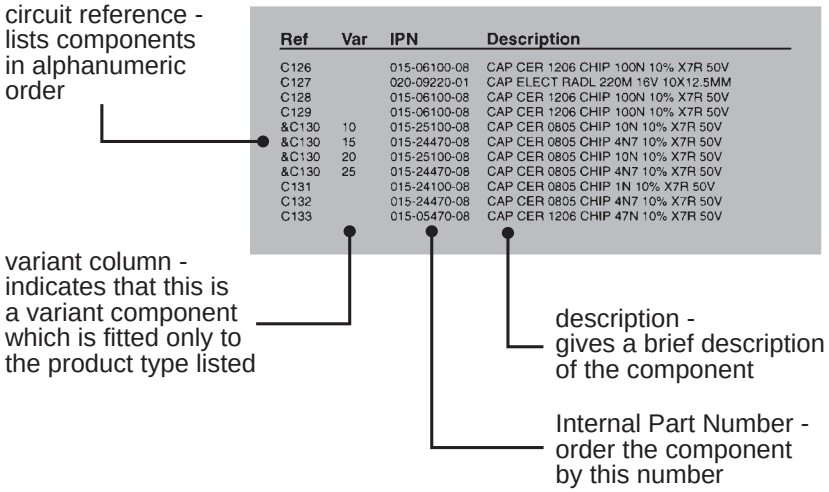

Ref	Var	IPN	Description
C126		015-06100-08	CAP CER 1206 CHIP 100N 10% X7R 50V
C127		020-09220-01	CAP ELECT RADL 220M 16V 10X12.5MM
C128		015-06100-08	CAP CER 1206 CHIP 100N 10% X7R 50V
C129		015-06100-08	CAP CER 1206 CHIP 100N 10% X7R 50V
&C130	10	015-25100-08	CAP CER 0805 CHIP 10N 10% X7R 50V
&C130	15	015-24470-08	CAP CER 0805 CHIP 4N7 10% X7R 50V
&C130	20	015-25100-08	CAP CER 0805 CHIP 10N 10% X7R 50V
&C130	25	015-24470-08	CAP CER 0805 CHIP 4N7 10% X7R 50V
C131		015-24100-08	CAP CER 0805 CHIP 1N 10% X7R 50V
C132		015-24470-08	CAP CER 0805 CHIP 4N7 10% X7R 50V
C133		015-05470-08	CAP CER 1206 CHIP 47N 10% X7R 50V

The mechanical and miscellaneous section lists the variant and common parts in IPN order.

Parts List Amendments

At the front of the parts list is the Parts List Amendments box (an example of which is shown below). This box contains a list of component changes which took place after the parts list and diagrams in this section were compiled. These changes (e.g. value changes, added/deleted components, etc.) are listed by circuit reference in alphanumeric order and supersede the information given in the parts list or diagrams. Components without circuit references are listed in IPN order. The number in brackets at the end of each entry refers to the Tait internal Change Order document.

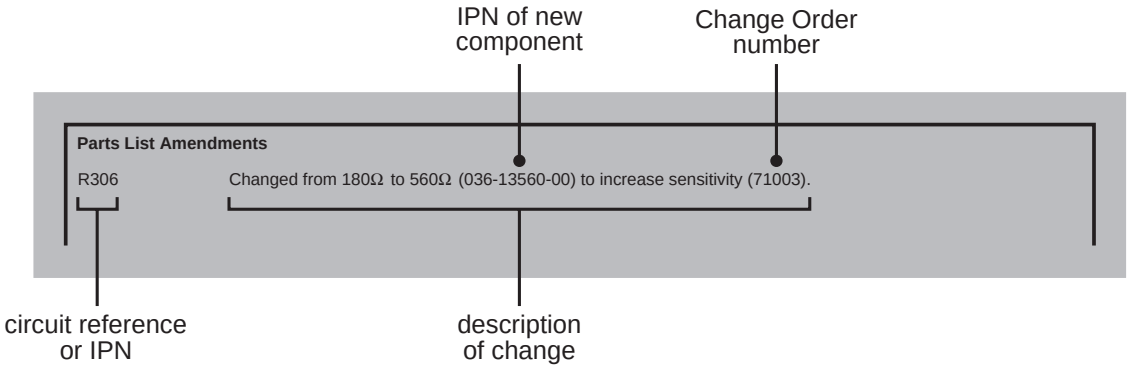

 Copyright TEL

Variant Components

A variant component is one that has the same circuit reference but different value or specification in different product types. Where two products share the same PCB, the term “variant” is also used to describe components unplaced in one product. Variant components have a character prefix, such as “&”, “=” or “#”, before the circuit reference (e.g. &R100).

The table below explains the variant prefixes used in T800 Series II products:

If the variant prefix is. . .	the component will. . .
&	change according to channel spacing
=	change according to frequency stability
#	change according to frequency range
%	be placed or unplaced for special applications
*	be unplaced in one product (where two products share the same PCB)

Grid Reference Index

This section contains a component grid reference index to help you find components and labelled pads on the PCB layouts and circuit diagrams. This index lists the components and pads in alphanumeric order, along with the appropriate alphanumeric grid references, as shown below:

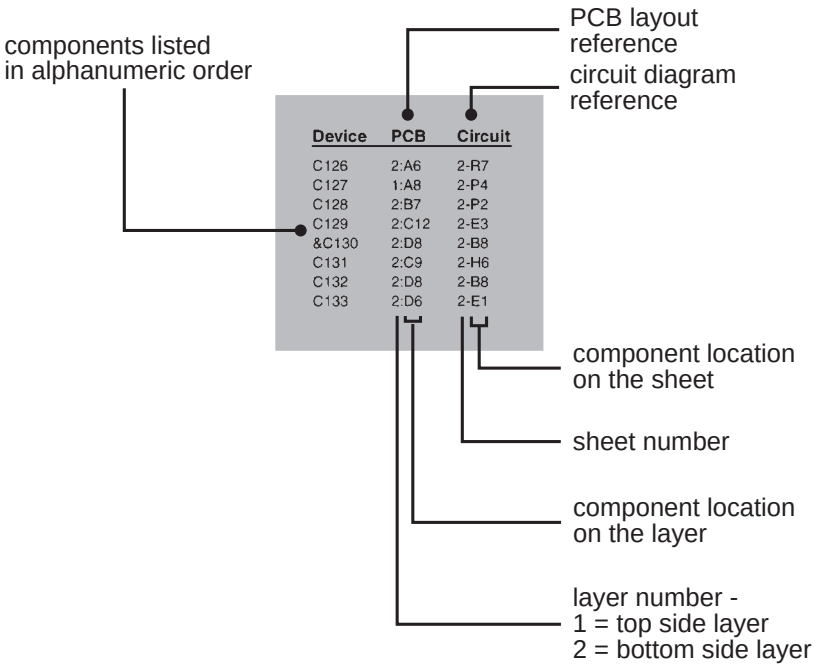

Using CAD Circuit Diagrams

Reading a CAD circuit diagram is similar to reading a road map, in that both have an alphanumeric border. The circuit diagrams in this manual use letters to represent the horizontal axis, and numbers for the vertical axis. These circuit diagram "grid references" are useful in following a circuit that is spread over two or more sheets.

When a line representing part of the circuitry is discontinued, a reference will be given at the end of the line to indicate where the rest of the circuitry is located, as shown below. The first digit refers to the sheet number and the last two characters refer to the location on that sheet of the continuation of the circuit (e.g. 1R3).

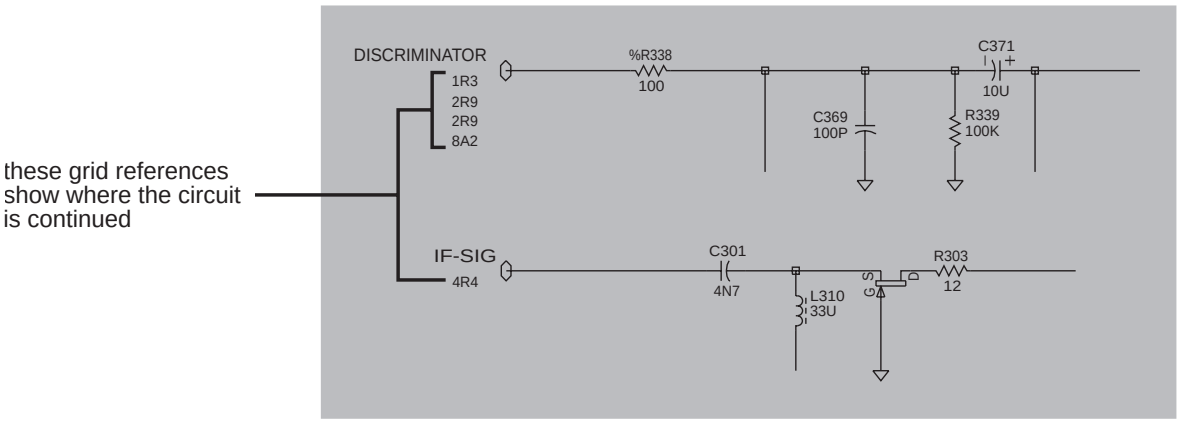

 Copyright TEL

6.2 T835 Receiver PCB

This section contains the following information.

IPN	Section	Page
220-011394-02	Parts List	6.2.3
	Mechanical & Miscellaneous Parts	6.2.8
	Mechanical Assembly	6.2.9
	Grid Reference Index	6.2.11
	PCB Layout - Top Side	6.2.15
	PCB Layout - Bottom Side	6.2.16
	Test Points & Options Connections - Top Side	6.2.17
	Test Points & Options Connections - Bottom Side	6.2.18
	Receiver Overview Diagram	6.2.19
	Audio Processor Circuit Diagram	6.2.20
	IF Section Circuit Diagram	6.2.21
	Front End Circuit Diagram	6.2.22
	VCO Section Circuit Diagram	6.2.23
	Regulators Circuit Diagram	6.2.24
	Synthesiser Circuit Diagram	6.2.25
	Microcontroller Circuit Diagram	6.2.26
	Harmonic Filter Circuit Diagram	6.2.27

Copyright TEL

T835 Parts List (IPN 220-01394-02)

How To Use This Parts List

The components listed in this parts list are divided into two main types: those with a circuit reference (e.g. C2, D1, R121, etc.) and those without (miscellaneous and mechanical).

Those with a circuit reference are grouped in alphabetical order and then in numerical order within each group. Each component entry comprises three or four columns: the circuit reference, variant (if applicable), IPN and description. A number in the variant column indicates that this is a variant component which is fitted only to the product type listed. Static sensitive devices are indicated by an (S) at the start of the description column.

The miscellaneous and mechanical section lists the variant and common parts in IPN order. Where possible, a number in the legend column indicates their position in the mechanical assembly drawing.

The Parts List Amendments box below lists component changes that took place after the parts list and diagrams in this section were compiled. These changes (e.g. value changes, added/deleted components, etc.) are listed by circuit reference in alphanumeric order and supersede the information given in the parts list or diagrams. Components without circuit references are listed in IPN order.

Parts List Amendments

C309	Changed from 33p to 18p (IPN 015-22180-01).	To improve sensitivity, selectivity, distortion and mute ratio (710056).
C311	Changed from 39p to 47p (IPN 015-22470-01).	
C406, C420 C448, C464	148-174MHz (-20, -23 & -25): changed from 15p (IPN 015-22150-01) to 18p (IPN 015-22180-01) to improve the front end tuning (710386).	
C774	Changed from 330n polyester to 330n polyphenylene-sulphide (IPN 022-06330-05) to improve ultimate signal-to-noise performance by reducing PLL phase noise (710352).	
D111	Changed from MR750 (IPN 001-00011-60) to MR2520L (IPN 001-00012-90) to provide overvoltage transient suppression (750087/88/89/90/91/92).	
IC710	Changed from 74HCU04 to 74HC04 (IPN 002-74900-04) to improve ultimate signal-to-noise performance by reducing PLL phase noise (710352).	
Q310	Changed from BF477A (IPN 000-50020-18) to BF247A (IPN 000-00020-18) as BF477A unavailable (710896).	
R256	Changed from 4k7 to 2k7 (IPN 036-14270-00).	To improve sensitivity, selectivity, distortion and mute ratio (710056).
R419	Changed from 470Ω to 560Ω (IPN 036-13560-00).	
R425	Changed from 180Ω to 560Ω (IPN 036-13560-00).	
R510	Changed from 680Ω to 2k2 (IPN 036-14220-00).	Loop filter revisions to improve narrow band selectivity and lock time (710317).
R775	Changed from 5k6 to 6k8 (IPN 036-14680-00).	
RV320	Changed to IPN 042-05470-07 (47k preset) because IPN 042-05470-06 no longer available (710793/96/97/98).	
303-11169-03	T800 chassis: replaced by 303-11169-04	New chassis and lid tooling introduced, incorporating mechanical improvements and better RF shielding (750027, 750028 & 750029). Note that the new lids should be used only with the new chassis.
312-01052-01	T800 top lid: replaced by 312-01052-02	
312-01053-01	T800 bottom lid: replaced by 312-01053-02	
349-00020-36	The two M3x8 Torx screws which secure the module into the rack frame have been replaced by M3x8 Pozidriv screws (IPN 349-00020-55) (750101/2/3/5/6).	

Ref	Var	IPN	Description
C201		020-08100-04	CAP ELE RA 10M 16V 4X7MM
&C203	10	015-25100-08	CAP CER 0805 10N 10% X7R 50V
&C203	13	015-25100-08	CAP CER 0805 10N 10% X7R 50V
&C203	15	015-24470-08	CAP CER 0805 4N7 10% X7R 50V
&C203	20	015-25100-08	CAP CER 0805 10N 10% X7R 50V
&C203	23	015-25100-08	CAP CER 0805 10N 10% X7R 50V
&C203	25	015-24470-08	CAP CER 0805 4N7 10% X7R 50V
C205		015-24470-08	CAP CER 0805 4N7 10% X7R 50V
C207		020-07100-02	CAP ELE RA 1M 50V 5X11MM
C209		020-08470-02	CAP ELE RA 47M 16V 6X11MM
C210		015-24100-08	CAP CER 0805 1N 10% X7R 50V
C211		015-24470-08	CAP CER 0805 4N7 10% X7R 50V
C213		015-25470-08	CAP CER 0805 47N 10% X7R 50V
C215		015-21220-01	CAP CER 0805 2P2+-1/4P NPO 50V
C217		015-22470-01	CAP CER 0805 47P 5% NPO 50V
C219		015-24470-08	CAP CER 0805 4N7 10% X7R 50V
C221		015-24100-08	CAP CER 0805 1N 10% X7R 50V
C222		020-08100-04	CAP ELE RA 10M 16V 4X7MM
C223		015-06100-08	CAP CER 1206 100N 10% X7R 50V
C225		015-06100-08	CAP CER 1206 100N 10% X7R 50V
C227		015-23100-01	CAP CER 0805 100P 5% NPO 50V
C229		020-08100-04	CAP ELE RA 10M 16V 4X7MM
C231		020-08100-04	CAP ELE RA 10M 16V 4X7MM
C233		020-08100-04	CAP ELE RA 10M 16V 4X7MM
C235		015-24100-08	CAP CER 0805 1N 10% X7R 50V
C237		015-24100-08	CAP CER 0805 1N 10% X7R 50V
C238		015-06100-08	CAP CER 1206 100N 10% X7R 50V
C239		020-09100-03	CAP ELE RA 100M 16V 8X11MM
C240A		015-24100-08	CAP CER 0805 1N 10% X7R 50V
C240B		015-06100-08	CAP CER 1206 100N 10% X7R 50V
C240C		020-09220-01	CAP ELE RA 220M 16V 10X12.5MM
C249		020-09470-05	CAP ELE RAD 470M 16V 10X12.5MM
C251		015-06100-08	CAP CER 1206 100N 10% X7R 50V
C253		020-09100-03	CAP ELE RA 100M 16V 8X11MM
C255		015-24100-08	CAP CER 0805 1N 10% X7R 50V
C257		015-24100-08	CAP CER 0805 1N 10% X7R 50V
C259		015-06100-08	CAP CER 1206 100N 10% X7R 50V
C260A		015-24100-08	CAP CER 0805 1N 10% X7R 50V
C260B		015-06100-08	CAP CER 1206 100N 10% X7R 50V
C260C		020-09220-01	CAP ELE RA 220M 16V 10X12.5MM
C261		020-09100-03	CAP ELE RA 100M 16V 8X11MM
C262		020-09100-03	CAP ELE RA 100M 16V 8X11MM
C264		015-06100-08	CAP CER 1206 100N 10% X7R 50V
C266		020-07470-91	CAP ELE RA 4M7 63V 6X11MM BI-P
C268		020-07470-91	CAP ELE RA 4M7 63V 6X11MM BI-P
C270		015-06100-08	CAP CER 1206 100N 10% X7R 50V
C272		015-25100-08	CAP CER 0805 10N 10% X7R 50V
C274		015-06100-08	CAP CER 1206 100N 10% X7R 50V
C276		015-25470-08	CAP CER 0805 47N 10% X7R 50V
C278		015-06100-08	CAP CER 1206 100N 10% X7R 50V
C280		015-25470-08	CAP CER 0805 47N 10% X7R 50V
C286		015-24470-08	CAP CER 0805 4N7 10% X7R 50V
C301		015-24470-08	CAP CER 0805 4N7 10% X7R 50V
C303		015-24470-08	CAP CER 0805 4N7 10% X7R 50V
C305		020-08100-04	CAP ELE RA 10M 16V 4X7MM
C307		015-24100-08	CAP CER 0805 1N 10% X7R 50V
C309		015-22330-01	CAP CER 0805 33P 5% NPO 50V
C311		015-22390-01	CAP CER 0805 39P 5% NPO 50V
&C313	10	015-22270-01	CAP CER 0805 27P 5% NPO 50V
&C313	13	015-22270-01	CAP CER 0805 27P 5% NPO 50V
&C313	15	015-22390-01	CAP CER 0805 39P 5% NPO 50V
&C313	20	015-22270-01	CAP CER 0805 27P 5% NPO 50V
&C313	23	015-22270-01	CAP CER 0805 27P 5% NPO 50V
&C313	25	015-22390-01	CAP CER 0805 39P 5% NPO 50V
&C315	10	015-25100-08	CAP CER 0805 10N 10% X7R 50V
&C315	13	015-25100-08	CAP CER 0805 10N 10% X7R 50V
&C315	15	015-22820-01	CAP CER 0805 82P 5% NPO 50V
&C315	20	015-25100-08	CAP CER 0805 10N 10% X7R 50V
&C315	23	015-25100-08	CAP CER 0805 10N 10% X7R 50V
&C315	25	015-22820-01	CAP CER 0805 82P 5% NPO 50V
&C317	10	015-20050-01	CAP CER 0805 0P5+-1/4P NPO 50V
&C317	13	015-20050-01	CAP CER 0805 0P5+-1/4P NPO 50V
&C317	15	015-22100-01	CAP CER 0805 10P+-1/2P NPO 50V
&C317	20	015-20050-01	CAP CER 0805 0P5+-1/4P NPO 50V
&C317	23	015-20050-01	CAP CER 0805 0P5+-1/4P NPO 50V
&C317	25	015-22100-01	CAP CER 0805 10P+-1/2P NPO 50V
&C319	10	015-25100-08	CAP CER 0805 10N 10% X7R 50V
&C319	13	015-25100-08	CAP CER 0805 10N 10% X7R 50V
&C319	15	015-22820-01	CAP CER 0805 82P 5% NPO 50V
&C319	20	015-25100-08	CAP CER 0805 10N 10% X7R 50V
&C319	23	015-25100-08	CAP CER 0805 10N 10% X7R 50V
&C319	25	015-22820-01	CAP CER 0805 82P 5% NPO 50V
&C321	10	015-22270-01	CAP CER 0805 27P 5% NPO 50V
&C321	13	015-22270-01	CAP CER 0805 27P 5% NPO 50V
&C321	15	015-22390-01	CAP CER 0805 39P 5% NPO 50V
&C321	20	015-22270-01	CAP CER 0805 27P 5% NPO 50V
&C321	23	015-22270-01	CAP CER 0805 27P 5% NPO 50V
&C321	25	015-22390-01	CAP CER 0805 39P 5% NPO 50V
C323		015-25100-08	CAP CER 0805 10N 10% X7R 50V
C325		020-08100-04	CAP ELE RA 10M 16V 4X7MM
C327		015-25100-08	CAP CER 0805 10N 10% X7R 50V
C329		015-25100-08	CAP CER 0805 10N 10% X7R 50V
C331		015-25100-08	CAP CER 0805 10N 10% X7R 50V
&C333	10	015-22270-01	CAP CER 0805 27P 5% NPO 50V
&C333	13	015-22270-01	CAP CER 0805 27P 5% NPO 50V
&C333	15	015-22390-01	CAP CER 0805 39P 5% NPO 50V
&C333	20	015-22270-01	CAP CER 0805 27P 5% NPO 50V
&C333	23	015-22270-01	CAP CER 0805 27P 5% NPO 50V
&C333	25	015-22390-01	CAP CER 0805 39P 5% NPO 50V
&C335	10	015-25100-08	CAP CER 0805 10N 10% X7R 50V
&C335	13	015-25100-08	CAP CER 0805 10N 10% X7R 50V
&C335	15	015-22820-01	CAP CER 0805 82P 5% NPO 50V
&C335	20	015-25100-08	CAP CER 0805 10N 10% X7R 50V
&C335	23	015-25100-08	CAP CER 0805 10N 10% X7R 50V
&C335	25	015-22820-01	CAP CER 0805 82P 5% NPO 50V
&C337	10	015-20050-01	CAP CER 0805 0P5+-1/4P NPO 50V
&C337	13	015-20050-01	CAP CER 0805 0P5+-1/4P NPO 50V
&C337	15	015-21180-01	CAP CER 0805 1P8+-1/4P NPO 50V
&C337	20	015-20050-01	CAP CER 0805 0P5+-1/4P NPO 50V
&C337	23	015-20050-01	CAP CER 0805 0P5+-1/4P NPO 50V
&C337	25	015-21180-01	CAP CER 0805 1P8+-1/4P NPO 50V
C339		015-25100-08	CAP CER 0805 10N 10% X7R 50V
C340A		025-08100-03	CAP 10M 35V 20% TANT 5MM L/S
C340B		015-25100-08	CAP CER 0805 10N 10% X7R 50V
C344		015-24470-08	CAP CER 0805 4N7 10% X7R 50V
C345		015-22330-01	CAP CER 0805 33P 5% NPO 50V
C347		015-22330-01	CAP CER 0805 33P 5% NPO 50V
C348		025-08100-03	CAP 10M 35V 20% TANT 5MM L/S
C349		015-25100-08	CAP CER 0805 10N 10% X7R 50V
C351		015-06100-08	CAP CER 1206 100N 10% X7R 50V
C353		015-06100-08	CAP CER 1206 100N 10% X7R 50V
C355		015-25470-08	CAP CER 0805 47N 10% X7R 50V
C357		015-23150-01	CAP CER 0805 150P 5% NPO 50V
C359		015-06100-08	CAP CER 1206 100N 10% X7R 50V
C361		015-06100-08	CAP CER 1206 100N 10% X7R 50V
C363		015-22150-01	CAP CER 0805 15P 5% NPO 50V
C365		015-25470-08	CAP CER 0805 47N 10% X7R 50V
C367		015-25100-08	CAP CER 0805 10N 10% X7R 50V
C369		015-23100-01	CAP CER 0805 100P 5% NPO 50V
C371		025-08100-02	CAP TANT BEAD 10M 10% 16V
C373		025-08100-02	CAP TANT BEAD 10M 10% 16V
C375		025-08100-02	CAP TANT BEAD 10M 10% 16V
C376		015-23100-01	CAP CER 0805 100P 5% NPO 50V
C377		015-23100-01	CAP CER 0805 100P 5% NPO 50V
C381		015-23100-01	CAP CER 0805 100P 5% NPO 50V
C383		015-25100-08	CAP CER 0805 10N 10% X7R 50V
C385		015-25100-08	CAP CER 0805 10N 10% X7R 50V
C390		025-08100-02	CAP TANT BEAD 10M 10% 16V
C391		015-25470-08	CAP CER 0805 47N 10% X7R 50V
C392		015-23120-01	CAP CER 0805 120P 5% NPO 50V
C393		015-23120-01	CAP CER 0805 120P 5% NPO 50V
C394		015-25470-08	CAP CER 0805 47N 10% X7R 50V
C395		015-25470-08	CAP CER 0805 47N 10% X7R 50V
C397		015-25470-08	CAP CER 0805 47N 10% X7R 50V
C399		015-25470-08	CAP CER 0805 47N 10% X7R 50V
C402		015-22390-01	CAP CER 0805 39P 5% NPO 50V
C404		015-21560-01	CAP CER 0805 5P6+-1/4P NPO 50V
C406		015-22150-01	CAP CER 0805 15P 5% NPO 50V
C408		015-22150-01	CAP CER 0805 15P 5% NPO 50V
C410		015-22390-01	CAP CER 0805 39P 5% NPO 50V
C412		015-22120-01	CAP CER 0805 12P 5% NPO 50V
C414		015-22330-01	CAP CER 0805 33P 5% NPO 50V
C416		015-22390-01	CAP CER 0805 39P 5% NPO 50V
C418		015-21560-01	CAP CER 0805 5P6+-1/4P NPO 50V
C420		015-22150-01	CAP CER 0805 15P 5% NPO 50V
C422		015-22150-01	CAP CER 0805 15P 5% NPO 50V
C424		015-22390-01	CAP CER 0805 39P 5% NPO 50V
C428		015-22220-01	CAP CER 0805 22P 5% NPO 50V
C430		015-23680-08	CAP CER 0805 680P 10% X7R 50V
C432		015-06100-08	CAP CER 1206 100N 10% X7R 50V
C436		015-24470-08	CAP CER 0805 4N7 10% X7R 50V
C438		015-24470-08	CAP CER 0805 4N7 10% X7R 50V
C440		015-24470-08	CAP CER 0805 4N7 10% X7R 50V
C442		015-24470-08	CAP CER 0805 4N7 10% X7R 50V
C446		015-21680-01	CAP CER 0805 6P8+-1/4P NPO 50V
C448		015-22150-01	CAP CER 0805 15P 5% NPO 50V
C450		015-22470-01	CAP CER 0805 47P 5% NPO 50V
C452		015-22150-01	CAP CER 0805 15P 5% NPO 50V
C454		015-22470-01	CAP CER 0805 47P 5% NPO 50V
C456		015-22100-01	CAP CER 0805 10P+-1/2P NPO 50V
C458		015-22390-01	CAP CER 0805 39P 5% NPO 50V
C462		015-21680-01	CAP CER 0805 6P8+-1/4P NPO 50V
C464		015-22150-01	CAP CER 0805 15P 5% NPO 50V
C468		015-22470-01	CAP CER 0805 47P 5% NPO 50V
C470		015-22150-01	CAP CER 0805 15P 5% NPO 50V
C472		015-22470-01	CAP CER 0805 47P 5% NPO 50V
C478		015-23180-01	CAP CER 0805 180P 5% NPO 50V
C480		015-23180-01	CAP CER 0805 180P 5% NPO 50V
C505		015-06100-08	CAP CER 1206 100N 10% X7R 50V
C515		015-06100-08	CAP CER 1206 100N 10% X7R 50V
C530		014-08100-00	CAP TANT CHIP 10M 16VW +-20%
C535		015-06100-08	CAP CER 1206 100N 10% X7R 50V
C610A		015-25100-08	CAP CER 0805 10N 10% X7R 50V
C610B		020-09100-04	CAP ELE RA 100M 10V 6.3X9MM
C611A		020-09100-04	CAP ELE RA 100M 10V 6.3X9MM
C611B		015-25100-08	CAP CER 0805 10N 10% X7R 50V
C623		015-24100-08	CAP CER 0805 1N 10% X7R 50V
C625		020-09470-07	CAPEL470M16V20%V 8*20 3.5L.ESR
C626		015-24470-08	CAP CER 0805 4N7 10% X7R 50V
C628		015-24100-08	CAP CER 0805 1N 10% X7R 50V
C630		015-06100-08	CAP CER 1206 100N 10% X7R 50V
C631A		015-06100-08	CAP CER 1206 100N 10% X7R 50V
C631B		025-08100-02	CAP TANT BEAD 10M 10% 16V
C637		015-24100-08	CAP CER 0805 1N 10% X7R 50V
C640		015-24100-08	CAP CER 0805 1N 10% X7R 50V
C651		015-06100-08	CAP CER 1206 100N 10% X7R 50V

 Copyright TEL

Ref	Var	IPN	Description
C658		015-06100-08	CAP CER 1206 100N 10% X7R 50V
C660		015-06100-08	CAP CER 1206 100N 10% X7R 50V
C665		020-58100-03	CAP ELE AI RDL 10M 50V 5X11MM
C670		025-07330-01	CAP TANT BEAD 3M3 35V
C673		015-24470-08	CAP CER 0805 4N7 10% X7R 50V
C677		020-07100-02	CAP ELE RA 1M 50V 5X11MM
C681		015-06100-08	CAP CER 1206 100N 10% X7R 50V
C684		025-08100-02	CAP TANT BEAD 10M 10% 16V
C687		015-24100-08	CAP CER 0805 1N 10% X7R 50V
C690		015-06100-08	CAP CER 1206 100N 10% X7R 50V
C693		025-08100-02	CAP TANT BEAD 10M 10% 16V
C700		015-06100-08	CAP CER 1206 100N 10% X7R 50V
C702		015-24100-08	CAP CER 0805 1N 10% X7R 50V
C703		015-24100-08	CAP CER 0805 1N 10% X7R 50V
C705		015-21820-01	CAP CER 0805 8P2+-1/4P NPO 50V
C707		015-22470-01	CAP CER 0805 47P 5% NPO 50V
C708		015-22470-01	CAP CER 0805 47P 5% NPO 50V
C709		015-22100-01	CAP CER 0805 10P+-1/2P NPO 50V
C710A		014-07470-00	CAP TANT CHIP 4U7 3.5 X 2.8MM
C710B		015-06100-08	CAP CER 1206 100N 10% X7R 50V
C710C		015-25100-08	CAP CER 0805 10N 10% X7R 50V
C711		015-23100-01	CAP CER 0805 100P 5% NPO 50V
C712		015-23100-01	CAP CER 0805 100P 5% NPO 50V
C713		015-25100-08	CAP CER 0805 10N 10% X7R 50V
C735		015-22470-01	CAP CER 0805 47P 5% NPO 50V
C736		015-22470-01	CAP CER 0805 47P 5% NPO 50V
C740A		015-24100-08	CAP CER 0805 1N 10% X7R 50V
C740B		015-25100-08	CAP CER 0805 10N 10% X7R 50V
C741A		014-07470-00	CAP TANT CHIP 4U7 3.5 X 2.8MM
C741B		015-25100-08	CAP CER 0805 10N 10% X7R 50V
C742A		015-06100-08	CAP CER 1206 100N 10% X7R 50V
C742B		015-25100-08	CAP CER 0805 10N 10% X7R 50V
C743		015-22470-01	CAP CER 0805 47P 5% NPO 50V
C745		015-24100-08	CAP CER 0805 1N 10% X7R 50V
C750		025-08100-03	CAP 10M 35V 20% TANT 5MM L/S
C757		015-25100-08	CAP CER 0805 10N 10% X7R 50V
C759		015-25100-08	CAP CER 0805 10N 10% X7R 50V
C761		015-25100-08	CAP CER 0805 10N 10% X7R 50V
C762		014-08220-01	(L)CAP TANT 22UF10V276MSER
C764		015-25100-08	CAP CER 0805 10N 10% X7R 50V
C765		014-07470-00	CAP TANT CHIP 4U7 3.5 X 2.8MM
C767		015-24100-08	CAP CER 0805 1N 10% X7R 50V
C769		015-24100-08	CAP CER 0805 1N 10% X7R 50V
C770		014-08220-01	(L)CAP TANT 22UF10V276MSER
C772		014-08220-01	(L)CAP TANT 22UF10V276MSER
C774		022-06330-03	CAP METPOLY330N 10% 50V 5 L/S
C776		015-25150-08	CAP CER 0805 15N 10% X7R 50V
C782		015-24100-08	CAP CER 0805 1N 10% X7R 50V
C784		015-24100-08	CAP CER 0805 1N 10% X7R 50V
C786		015-06100-08	CAP CER 1206 100N 10% X7R 50V
C788		015-24100-08	CAP CER 0805 1N 10% X7R 50V
C790		015-24100-08	CAP CER 0805 1N 10% X7R 50V
C792		015-24100-08	CAP CER 0805 1N 10% X7R 50V
C810		015-25100-08	CAP CER 0805 10N 10% X7R 50V
C812		015-23100-01	CAP CER 0805 100P 5% NPO 50V
C813		015-24100-08	CAP CER 0805 1N 10% X7R 50V
C814		015-24100-08	CAP CER 0805 1N 10% X7R 50V
C815		015-05100-07	CAP 1206 CHIP NPO 10nF 25V
C816		015-25100-08	CAP CER 0805 10N 10% X7R 50V
C818		015-25100-08	CAP CER 0805 10N 10% X7R 50V
C819		015-22330-01	CAP CER 0805 33P 5% NPO 50V
C820		015-23220-01	CAP CER 0805 220P 5% NPO 50V
C822		015-25220-08	CAP CER 0805 22N 10% X7R 50V
C824		015-25470-08	CAP CER 0805 47N 10% X7R 50V
C826		015-05100-07	CAP 1206 CHIP NPO 10nF 25V
C828		015-05100-07	CAP 1206 CHIP NPO 10nF 25V
C830		015-25470-08	CAP CER 0805 47N 10% X7R 50V
C832		016-07100-01	CAP EL 6X4 1M 20% 50V
C833		015-25220-08	CAP CER 0805 22N 10% X7R 50V
C834		015-25100-08	CAP CER 0805 10N 10% X7R 50V
C836		015-05100-07	CAP 1206 CHIP NPO 10nF 25V
C837		015-05100-07	CAP 1206 CHIP NPO 10nF 25V
C838		015-05100-07	CAP 1206 CHIP NPO 10nF 25V
C840		015-25470-08	CAP CER 0805 47N 10% X7R 50V
C842		016-07100-01	CAP EL 6X4 1M 20% 50V
C844		016-07100-01	CAP EL 6X4 1M 20% 50V
C846		016-07100-01	CAP EL 6X4 1M 20% 50V
C848		016-07100-01	CAP EL 6X4 1M 20% 50V
C850		015-25470-08	CAP CER 0805 47N 10% X7R 50V
C873		015-25220-08	CAP CER 0805 22N 10% X7R 50V
C876		020-09100-04	CAP ELE RA 100M 10V 6.3X9MM
C879		020-08100-04	CAP ELE RA 10M 16V 4X7MM
C910		015-22150-01	CAP CER 0805 15P 5% NPO 50V
C920		015-22330-01	CAP CER 0805 33P 5% NPO 50V
C930		015-22330-01	CAP CER 0805 33P 5% NPO 50V
C940		015-22150-01	CAP CER 0805 15P 5% NPO 50V
CV318		028-02100-06	CAP TRM 3/10P NPO TOP ADJ
D111		001-00011-60	(S) DIODE SR2607 -- USE MR750
D220		001-10000-56	(S) DIODE SMD BAW56 D-SW SOT23
D230		001-10000-70	(S) DIODE SMD BAV70 D-SW SOT23
D240		001-10000-99	(S) DIODE SMD BAV99 D-SW SOT23
D250		008-00013-32	(S) LED 3 RED LO CURRENT NO MTG
D260		001-10084-33	(S) DIODE ZEN SMD 0.3W 3V3SOT23
D270		001-10000-70	(S) DIODE SMD BAV70 D-SW SOT23
D280		008-00013-35	(S) LED 3 GRN LO CURRENT NO MTG
D285		001-00011-70	(S) DIODE 1N4001 1A/50V

Ref	Var	IPN	Description
D289		001-00011-70	(S) DIODE 1N4001 1A/50V
D290		001-00011-70	(S) DIODE 1N4001 1A/50V
D295		001-00011-70	(S) DIODE 1N4001 1A/50V
D310		001-10000-56	(S) DIODE SMD BAW56 D-SW SOT23
D610		001-10000-99	(S) DIODE SMD BAV99 D-SW SOT23
D640		001-10000-70	(S) DIODE SMD BAV70 D-SW SOT23
D730		001-10065-00	DIODE BAT65 SCHOTTKEY SOD123
D740		001-10065-00	DIODE BAT65 SCHOTTKEY SOD123
D820		001-10065-00	DIODE BAT65 SCHOTTKEY SOD123
D860		001-10000-70	(S) DIODE SMD BAV70 D-SW SOT23
D880		001-10000-70	(S) DIODE SMD BAV70 D-SW SOT23
IC210		002-00012-40	(S) IC 358 DUAL O-AMP
IC240		002-00014-05	(S) IC TDA7231 1.6W AF PWR
IC260		002-00014-05	(S) IC TDA7231 1.6W AF PWR
IC270		002-00012-40	(S) IC 358 DUAL O-AMP
IC280		002-00012-40	(S) IC 358 DUAL O-AMP
IC340		002-00061-20	(S) IC NE612AN DBM & OSCILLATOR
IC350		002-00061-40	(S) IC NE614AN LO PWR IF 16DIL
IC390		002-00012-25	(S) IC TL084 4X O-AMP JFET IP
IC410		002-00022-01	(S) MIXER DOUBLE BLNCD 2-750MHZ
IC610		002-00014-58	(S) IC 78L05 5V 100MA REG TO92
IC630		002-00014-62	(S) IC 317L 100MA REG 3TER TO92
IC640		002-10003-58	(S) IC SMD LM358 DUAL O-AMP
IC650		002-10012-32	SMD DS1232LPS-2 LP RESET&W-DOG
IC700		539-00010-41	TCXO 12.8MHZ +-2.5PPM -30 +70C
IC710		002-74910-04	(S) IC SMD 74HCU04 6X INV
IC740		002-14519-10	(S) IC MC145191F SMD SYNTH
IC750		002-10330-78	(S) IC MC33078D 2X AMP LO NOISE
IC810		002-08951-20	(S) IC AT89C51 PLCC44 MIC 12MHZ
IC820		002-12416-00	(S)IC SMD AT24C16N-10SC EEPROM
IC830		002-10003-24	(S) IC SMD 324 4X O-AMP SO14
IC840		002-10040-53	(S) IC 4053 SMD 3X 2CH M-PLEXR
IC850		002-10003-24	(S) IC SMD 324 4X O-AMP SO14
L230		056-00021-02	IND FXD 100UH AX
L310		056-00021-07	IND FXD 33UH AX
L320		056-00021-09	IND FXD 820NH AX 4X9
L330		050-00016-58	COIL TAIT 658 2MH IF 7.5*7.5
L340		050-00016-58	COIL TAIT 658 2MH IF 7.5*7.5
L350		050-00016-58	COIL TAIT 658 2MH IF 7.5*7.5
L360		050-00016-31	COIL TAIT NO 631 455KHZ
L410		050-00016-59	COIL 659 RF 3.5T SLUG/CAN
L420		050-00016-59	COIL 659 RF 3.5T SLUG/CAN
L430		052-08135-65	COIL A/W 6.5T/3.5MM HOR 0.8MM
L440		056-00021-04	IND FXD 330NH AX
L450		056-00021-04	IND FXD 330NH AX
L460		050-00016-59	COIL 659 RF 3.5T SLUG/CAN
L470		050-00016-59	COIL 659 RF 3.5T SLUG/CAN
L480		056-00021-04	IND FXD 330NH AX
L490		056-00021-04	IND FXD 330NH AX
L750		056-10068-00	IND FXD SMD 68NH 3.2*2.5*1.6
L910		052-08140-35	COIL A/W 3.5T/4.0MM HOR 0.8MM
L920		052-08140-35	COIL A/W 3.5T/4.0MM HOR 0.8MM
L930		052-08140-35	COIL A/W 3.5T/4.0MM HOR 0.8MM
PL100		240-00010-55	PLUG 15 W D RANGE W/W PNL MT
PL210		240-00020-59	HEADER 3 W 1 R PCB MTG
PL220		240-00020-59	HEADER 3 W 1 R PCB MTG
PL230		240-00020-63	HEADER 4 W X1R PCB MTG
PL240		240-00020-58	HEADER 5 WX1 R PCB MTG
PL250		240-00020-59	HEADER 3 W 1 R PCB MTG
PL260		240-00020-59	HEADER 3 W 1 R PCB MTG
PL270		240-00020-59	HEADER 3 W 1 R PCB MTG
Q210		000-10008-48	(S) XSTR SMD BCW60 NPN SOT23 SS
Q220		000-10008-48	(S) XSTR SMD BCW60 NPN SOT23 SS
Q230		000-10008-48	(S) XSTR SMD BCW60 NPN SOT23 SS
Q240		000-10008-57	(S) XSTR SMD BCW70 PNP SOT23 SS
Q245		000-10008-57	(S) XSTR SMD BCW70 PNP SOT23 SS
Q250		000-10008-48	(S) XSTR SMD BCW60 NPN SOT23 SS
Q255		000-10008-57	(S) XSTR SMD BCW70 PNP SOT23 SS
Q260		000-10008-48	(S) XSTR SMD BCW60 NPN SOT23 SS
Q270		000-10008-17	(S) XSTR SMD BC817-25 NPN SOT23
Q280		000-10008-48	(S) XSTR SMD BCW60 NPN SOT23 SS
Q290		000-10008-48	(S) XSTR SMD BCW60 NPN SOT23 SS
Q310		000-50020-18	(S) XSTR AI BF247A JFETTO92 VHF
Q320		000-10095-10	(S) XSTR SMD BR951 NPN UHF
Q330		000-10095-10	(S) XSTR SMD BR951 NPN UHF
Q340		000-10008-48	(S) XSTR SMD BCW60 NPN SOT23 SS
Q350		000-10008-48	(S) XSTR SMD BCW60 NPN SOT23 SS
Q410		000-10008-57	(S) XSTR SMD BCW70 PNP SOT23 SS
Q420		000-10095-10	(S) XSTR SMD BR951 NPN UHF
Q540		000-10008-48	(S) XSTR SMD BCW60 NPN SOT23 SS
Q620		000-00012-15	(S) XSTR BD234 PNP AF PWR TO126
Q630		000-50011-30	(S) XSTR AI BC557B PNP TO92 AF
Q660		000-10008-17	(S) XSTR SMD BC817-25 NPN SOT23
Q670		000-10008-57	(S) XSTR SMD BCW70 PNP SOT23 SS
Q750		000-10008-07	(S) XSTR SMD BC807 PNP SOT23 AF
Q760		000-10008-48	(S) XSTR SMD BCW60 NPN SOT23 SS
Q770		000-10008-57	(S) XSTR SMD BCW70 PNP SOT23 SS
Q775		000-10008-57	(S) XSTR SMD BCW70 PNP SOT23 SS
Q780		000-10008-48	(S) XSTR SMD BCW60 NPN SOT23 SS
Q785		000-10008-57	(S) XSTR SMD BCW70 PNP SOT23 SS
Q790		000-10003-12	(S) XSTR SMD BFR31 N JFET SOT23
Q795		000-10057-10	(S) XSTR SMD BR571 NPN SOT23
Q810		000-10008-17	(S) XSTR SMD BC817-25 NPN SOT23
Q820		000-10008-57	(S) XSTR SMD BCW70 PNP SOT23 SS

Ref	Var	IPN	Description
Q840		000-10008-57	(S) XSTR SMD BCW70 PNP SOT23 SS
Q850		000-10008-48	(S) XSTR SMD BCW60 NPN SOT23 SS
Q860		000-10008-57	(S) XSTR SMD BCW70 PNP SOT23 SS
Q870		000-10008-48	(S) XSTR SMD BCW60 NPN SOT23 SS
Q880		000-10008-48	(S) XSTR SMD BCW60 NPN SOT23 SS
Q890		000-10008-48	(S) XSTR SMD BCW60 NPN SOT23 SS
Q895		000-10008-48	(S) XSTR SMD BCW60 NPN SOT23 SS
R160		036-12100-00	RES M/F 0805 10E 5%
R201		036-14470-00	RES M/F 0805 4K7 5%
&R202	10	036-14470-00	RES M/F 0805 4K7 5%
&R202	13	036-14470-00	RES M/F 0805 4K7 5%
&R202	15	036-14330-00	RES M/F 0805 3K3 5%
&R202	20	036-14470-00	RES M/F 0805 4K7 5%
&R202	23	036-14470-00	RES M/F 0805 4K7 5%
&R202	25	036-14330-00	RES M/F 0805 3K3 5%
R204		036-15100-00	RES M/F 0805 10K 5%
R205		036-16220-00	RES M/F 0805 220K 5%
R207		036-14820-00	RES M/F 0805 8K2 5%
&R209	10	036-15220-00	RES M/F 0805 22K 5%
&R209	13	036-15220-00	RES M/F 0805 22K 5%
&R209	15	036-15180-00	RES M/F 0805 18K 5%
&R209	20	036-15220-00	RES M/F 0805 22K 5%
&R209	23	036-15220-00	RES M/F 0805 22K 5%
&R209	25	036-15180-00	RES M/F 0805 18K 5%
R210		036-15150-00	RES M/F 0805 15K 5%
R211		036-15390-00	RES M/F 0805 39K 5%
R213		036-14270-00	RES M/F 0805 2K7 5%
R215		036-15150-00	RES M/F 0805 15K 5%
R218		036-14390-00	RES M/F 0805 3K9 5%
&R219	10	036-14820-00	RES M/F 0805 8K2 5%
&R219	13	036-14820-00	RES M/F 0805 8K2 5%
&R219	15	036-14390-00	RES M/F 0805 3K9 5%
&R219	20	036-14820-00	RES M/F 0805 8K2 5%
&R219	23	036-14820-00	RES M/F 0805 8K2 5%
&R219	25	036-14390-00	RES M/F 0805 3K9 5%
R221		036-15470-00	RES M/F 0805 47K 5%
R222		036-16100-00	RES M/F 0805 100K 5%
%R223		036-12100-00	RES M/F 0805 10E 5%
R224		036-14390-00	RES M/F 0805 3K9 5%
R225		036-13470-00	RES M/F 0805 470E 5%
R227		036-14100-00	RES M/F 0805 1K 5%
R229		036-14470-00	RES M/F 0805 4K7 5%
R230		036-14470-00	RES M/F 0805 4K7 5%
R232		036-15470-00	RES M/F 0805 47K 5%
R233		036-14820-00	RES M/F 0805 8K2 5%
R234		036-15470-00	RES M/F 0805 47K 5%
R236		036-15470-00	RES M/F 0805 47K 5%
R238		036-11470-00	RES M/F 0805 4E7 10%
R239		036-14100-00	RES M/F 0805 1K 5%
R241		036-14100-00	RES M/F 0805 1K 5%
R242		036-13100-00	RES M/F 0805 100E 5%
R244		036-14680-00	RES M/F 0805 6K8 5%
R245		036-14100-00	RES M/F 0805 1K 5%
R247		036-14220-00	RES M/F 0805 2K2 5%
R249		036-15100-00	RES M/F 0805 10K 5%
R251		036-15390-00	RES M/F 0805 39K 5%
R252		036-14470-00	RES M/F 0805 4K7 5%
R254		036-14820-00	RES M/F 0805 8K2 5%
R255		036-15470-00	RES M/F 0805 47K 5%
R256		036-14470-00	RES M/F 0805 4K7 5%
R258		036-15470-00	RES M/F 0805 47K 5%
R260		036-11470-00	RES M/F 0805 4E7 10%
R261		036-13150-00	RES M/F 0805 150E 5%
R262		036-14100-00	RES M/F 0805 1K 5%
R264		036-15270-00	RES M/F 0805 27K 5%
R265		036-13100-00	RES M/F 0805 100E 5%
R266		036-15220-00	RES M/F 0805 22K 5%
R267		036-16330-00	RES M/F 0805 330K 5%
R269		036-14220-00	RES M/F 0805 2K2 5%
R271		036-16100-00	RES M/F 0805 100K 5%
R272		036-15470-00	RES M/F 0805 47K 5%
R273		036-15150-00	RES M/F 0805 15K 5%
R275		036-13100-00	RES M/F 0805 100E 5%
R277		036-14560-00	RES M/F 0805 5K6 5%
R278		036-16220-00	RES M/F 0805 220K 5%
R280		036-16100-00	RES M/F 0805 100K 5%
R281		036-14470-00	RES M/F 0805 4K7 5%
R282		036-16100-00	RES M/F 0805 100K 5%
R284		036-13100-00	RES M/F 0805 100E 5%
R285		036-15470-00	RES M/F 0805 47K 5%
R287		036-15100-00	RES M/F 0805 10K 5%
R288		036-14470-00	RES M/F 0805 4K7 5%
R289		036-14680-00	RES M/F 0805 6K8 5%
R290		036-14100-00	RES M/F 0805 1K 5%
R292		036-14680-00	RES M/F 0805 6K8 5%
R293		036-13560-00	RES M/F 0805 560E 5%
R294		036-14100-00	RES M/F 0805 1K 5%
R295		036-14680-00	RES M/F 0805 6K8 5%
R296		036-14120-00	RES M/F 0805 1K2 5%
R297		030-52100-20	RES FILM AI 10E 5% 0.4W 4X1.6
R298		036-15470-00	RES M/F 0805 47K 5%
R299		036-15470-00	RES M/F 0805 47K 5%
R301		036-13100-00	RES M/F 0805 100E 5%
R302		036-17100-00	RES M/F 0805 1M 5%
R303		036-12120-00	RES M/F 0805 12E 5%
R305		036-12100-00	RES M/F 0805 10E 5%
R307		036-13680-00	RES M/F 0805 680E 5%
R309		036-17100-00	RES M/F 0805 1M 5%
R311		036-10000-00	RES M/F 0805 ZERO OHM
R313		036-17100-00	RES M/F 0805 1M 5%
R315		036-14100-00	RES M/F 0805 1K 5%
R317		036-11470-00	RES M/F 0805 4E7 10%
R319		036-14330-00	RES M/F 0805 3K3 5%
R321		036-14100-00	RES M/F 0805 1K 5%
R323		036-12680-00	RES M/F 0805 68E 5%
R325		036-13100-00	RES M/F 0805 100E 5%
R327		036-12560-00	RES M/F 0805 56E 5%
R329		036-12390-00	RES M/F 0805 39E 5%
R331		036-13470-00	RES M/F 0805 470E 5%
R332		036-13680-00	RES M/F 0805 680E 5%
R333		036-12100-00	RES M/F 0805 10E 5%
&R333	10	036-17100-00	RES M/F 0805 1M 5%
&R333	13	036-17100-00	RES M/F 0805 1M 5%
&R333	15	036-14330-00	RES M/F 0805 3K3 5%
&R333	20	036-17100-00	RES M/F 0805 1M 5%
&R333	23	036-17100-00	RES M/F 0805 1M 5%
&R333	25	036-14330-00	RES M/F 0805 3K3 5%
R334		036-10000-00	RES M/F 0805 ZERO OHM
R335		036-10000-00	RES M/F 0805 ZERO OHM
R337		036-14120-00	RES M/F 0805 1K2 5%
R339		036-16100-00	RES M/F 0805 100K 5%
R341		036-17100-00	RES M/F 0805 1M 5%
R343		036-15470-00	RES M/F 0805 47K 5%
R345		036-15470-00	RES M/F 0805 47K 5%
&R347	10	036-15100-00	RES M/F 0805 10K 5%
&R347	13	036-15100-00	RES M/F 0805 10K 5%
&R347	15	036-14820-00	RES M/F 0805 8K2 5%
&R347	20	036-15100-00	RES M/F 0805 10K 5%
&R347	23	036-15100-00	RES M/F 0805 10K 5%
&R347	25	036-14820-00	RES M/F 0805 8K2 5%
R349		036-15100-00	RES M/F 0805 10K 5%
R351		045-03500-01	RES NTC 500E 5MM DISC UNCOATED
R353		036-13220-00	RES M/F 0805 220E 5%
R355		036-15100-00	RES M/F 0805 10K 5%
R357		036-14150-00	RES M/F 0805 1K5 5%
R359		036-16330-00	RES M/F 0805 330K 5%
R361		036-17100-00	RES M/F 0805 1M 5%
R363		036-12100-00	RES M/F 0805 10E 5%
R365		036-14330-00	RES M/F 0805 3K3 5%
R367		036-14100-00	RES M/F 0805 1K 5%
R369		036-15150-00	RES M/F 0805 15K 5%
R371		045-06100-01	RES NTC 100K 5% 5MM DISC
R372		036-14100-00	RES M/F 0805 1K 5%
R374		036-14330-00	RES M/F 0805 3K3 5%
R376		036-15220-00	RES M/F 0805 22K 5%
R378		036-16100-00	RES M/F 0805 100K 5%
R380		036-13100-00	RES M/F 0805 100E 5%
R381		036-14270-00	RES M/F 0805 2K7 5%
R383		036-14100-00	RES M/F 0805 1K 5%
R385		036-15100-00	RES M/F 0805 10K 5%
R387		036-15470-00	RES M/F 0805 47K 5%
R389		036-15470-00	RES M/F 0805 47K 5%
R391		036-15820-00	RES M/F 0805 82K 5%
R393		036-15470-00	RES M/F 0805 47K 5%
R395		036-13470-00	RES M/F 0805 470E 5%
R397		036-15220-00	RES M/F 0805 22K 5%
R398		036-15100-00	RES M/F 0805 10K 5%
R399		036-14100-00	RES M/F 0805 1K 5%
R410		036-14100-00	RES M/F 0805 1K 5%
R413		036-14390-00	RES M/F 0805 3K9 5%
R416		036-14220-00	RES M/F 0805 2K2 5%
R418		036-17100-00	RES M/F 0805 1M 5%
R419		036-13470-00	RES M/F 0805 470E 5%
R422		036-12100-00	RES M/F 0805 10E 5%
R425		036-13180-00	RES M/F 0805 180E 5%
R427		036-17100-00	RES M/F 0805 1M 5%
R428		036-12330-00	RES M/F 0805 33E 5%
R432		036-13470-00	RES M/F 0805 470E 5%
R435		036-12120-00	RES M/F 0805 12E 5%
R438		036-13470-00	RES M/F 0805 470E 5%
R441		036-17100-00	RES M/F 0805 1M 5%
R444		036-10000-00	RES M/F 0805 ZERO OHM
R447		036-17100-00	RES M/F 0805 1M 5%
R453		036-13470-00	RES M/F 0805 470E 5%
R456		036-12120-00	RES M/F 0805 12E 5%
R459		036-13470-00	RES M/F 0805 470E 5%
R464		036-12470-00	RES M/F 0805 47E 5%
R510		036-13680-00	RES M/F 0805 680E 5%
R515		036-12560-00	RES M/F 0805 56E 5%
R555		036-14100-00	RES M/F 0805 1K 5%
R615		036-13100-00	RES M/F 0805 100E 5%
R617		036-10000-00	RES M/F 0805 ZERO OHM
R619		032-31100-00	RES M/F PWR 1E0 5% 1W 12X4.5MM
R621		032-31100-00	RES M/F PWR 1E0 5% 1W 12X4.5MM
R625		036-14100-00	RES M/F 0805 1K 5%
R629		032-33270-00	RES M/F PWR 270E 5% 1W 12X4.5
R633		036-14680-00	RES M/F 0805 6K8 5%
R636		036-12330-00	RES M/F 0805 33E 5%
R637		036-12330-00	RES M/F 0805 33E 5%
R641		036-14150-00	RES M/F 0805 1K5 5%
R645		036-13470-00	RES M/F 0805 470E 5%
R649		036-14470-00	RES M/F 0805 4K7 5%
R653		036-15100-00	RES M/F 0805 10K 5%
R681		036-13100-00	RES M/F 0805 100E 5%
R685		036-15150-00	RES M/F 0805 15K 5%

 Copyright TEL

Ref	Var	IPN	Description
R689		036-12100-00	RES M/F 0805 10E 5%
R693		036-16100-00	RES M/F 0805 100K 5%
R696		036-15560-00	RES M/F 0805 56K 5%
R701		036-12220-00	RES M/F 0805 22E 5%
R702		036-17100-00	RES M/F 0805 1M 5%
R703		036-17100-00	RES M/F 0805 1M 5%
R706		036-15150-00	RES M/F 0805 15K 5%
R707		036-16100-00	RES M/F 0805 100K 5%
R708		036-13100-00	RES M/F 0805 100E 5%
R709		036-13100-00	RES M/F 0805 100E 5%
R710		036-13100-00	RES M/F 0805 100E 5%
R711		036-13100-00	RES M/F 0805 100E 5%
R712		036-12100-00	RES M/F 0805 10E 5%
R742		036-13150-00	RES M/F 0805 150E 5%
R743		036-13150-00	RES M/F 0805 150E 5%
R744		036-12220-00	RES M/F 0805 22E 5%
R746		036-12220-00	RES M/F 0805 22E 5%
R747		036-12220-00	RES M/F 0805 22E 5%
R748		036-15470-00	RES M/F 0805 47K 5%
R749		036-15470-00	RES M/F 0805 47K 5%
R750		036-12220-00	RES M/F 0805 22E 5%
R752		036-12220-00	RES M/F 0805 22E 5%
R753		036-17100-00	RES M/F 0805 1M 5%
R754		036-14100-00	RES M/F 0805 1K 5%
R756		036-16470-00	RES M/F 0805 470K 5%
R757		036-16470-00	RES M/F 0805 470K 5%
R758		036-14120-00	RES M/F 0805 1K2 5%
R759		036-13330-00	RES M/F 0805 330E 5%
R760		036-13180-00	RES M/F 0805 180E 5%
R762		036-13100-00	RES M/F 0805 100E 5%
R763		036-13100-00	RES M/F 0805 100E 5%
R765		036-13680-00	RES M/F 0805 680E 5%
R766		036-14100-00	RES M/F 0805 1K 5%
R767		036-13680-00	RES M/F 0805 680E 5%
R769		036-13180-00	RES M/F 0805 180E 5%
R771		036-14820-00	RES M/F 0805 8K2 5%
R772		036-15220-00	RES M/F 0805 22K 5%
R774		036-14820-00	RES M/F 0805 8K2 5%
R775		036-14560-00	RES M/F 0805 5K6 5%
R784		036-12680-00	RES M/F 0805 68E 5%
R785		036-14330-00	RES M/F 0805 3K3 5%
R786		036-12100-00	RES M/F 0805 10E 5%
R787		036-12100-00	RES M/F 0805 10E 5%
R790		036-13220-00	RES M/F 0805 220E 5%
R791		036-13100-00	RES M/F 0805 100E 5%
R792		036-14100-00	RES M/F 0805 1K 5%
R804		036-15470-00	RES M/F 0805 47K 5%
R805		036-13470-00	RES M/F 0805 470E 5%
R808		036-12100-00	RES M/F 0805 10E 5%
R809		036-14470-00	RES M/F 0805 4K7 5%
R810		036-14470-00	RES M/F 0805 4K7 5%
R811		036-14470-00	RES M/F 0805 4K7 5%
R812		036-14470-00	RES M/F 0805 4K7 5%
R813		036-14470-00	RES M/F 0805 4K7 5%
R815		036-15470-00	RES M/F 0805 47K 5%
R816		036-16150-00	RES M/F 0805 150K 5%
R818		036-14470-00	RES M/F 0805 4K7 5%
R819		036-14470-00	RES M/F 0805 4K7 5%
R820		036-15470-00	RES M/F 0805 47K 5%
R821		036-15470-00	RES M/F 0805 47K 5%
R822		036-15470-00	RES M/F 0805 47K 5%
R823		036-15470-00	RES M/F 0805 47K 5%
R824		036-14220-00	RES M/F 0805 2K2 5%
R825		036-14220-00	RES M/F 0805 2K2 5%
R826		036-14220-00	RES M/F 0805 2K2 5%
R827		036-14220-00	RES M/F 0805 2K2 5%
R828		036-14220-00	RES M/F 0805 2K2 5%
R829		036-14220-00	RES M/F 0805 2K2 5%
R830		036-14220-00	RES M/F 0805 2K2 5%
R831		036-14220-00	RES M/F 0805 2K2 5%
R832		036-14220-00	RES M/F 0805 2K2 5%
R833		036-14220-00	RES M/F 0805 2K2 5%
R835		036-14220-00	RES M/F 0805 2K2 5%
R836		036-14220-00	RES M/F 0805 2K2 5%
R837		036-14220-00	RES M/F 0805 2K2 5%
R840		036-14220-00	RES M/F 0805 2K2 5%
R841		036-14220-00	RES M/F 0805 2K2 5%
R842		036-14220-00	RES M/F 0805 2K2 5%
R843		036-14220-00	RES M/F 0805 2K2 5%
R844		036-15470-00	RES M/F 0805 47K 5%
R845		036-16150-00	RES M/F 0805 150K 5%
R846		036-14470-00	RES M/F 0805 4K7 5%
R847		036-14470-00	RES M/F 0805 4K7 5%
R848		036-13470-00	RES M/F 0805 470E 5%
R849		036-13470-00	RES M/F 0805 470E 5%
R850		036-13470-00	RES M/F 0805 470E 5%
R851		036-13470-00	RES M/F 0805 470E 5%
R852		036-14470-00	RES M/F 0805 4K7 5%
R853		036-13470-00	RES M/F 0805 470E 5%
R854		036-16330-00	RES M/F 0805 330K 5%
R855		036-15470-00	RES M/F 0805 47K 5%
R856		036-16150-00	RES M/F 0805 150K 5%
R857		036-16150-00	RES M/F 0805 150K 5%
R858		036-15270-10	RES M/F 0805 27K 1%
R859		036-17120-10	RES MF 0805 CHIP 1M2 1%
R860		036-16820-10	RES MF 0805 CHIP 820K 1%
R861		036-14510-10	RES MF 0805 CHIP 5K1 1%
R863		036-14470-00	RES M/F 0805 4K7 5%
R865		036-14270-00	RES M/F 0805 2K7 5%
R866		036-16820-00	RES M/F 0805 820K 5%
R867		036-16820-00	RES M/F 0805 820K 5%
R868		036-14470-00	RES M/F 0805 4K7 5%
R869		036-15270-10	RES M/F 0805 27K 1%
R870		036-17120-10	RES MF 0805 CHIP 1M2 1%
R871		036-16820-10	RES MF 0805 CHIP 820K 1%
R872		036-14510-10	RES MF 0805 CHIP 5K1 1%
R873		036-14220-00	RES M/F 0805 2K2 5%
R875		036-14470-00	RES M/F 0805 4K7 5%
R876		036-16100-00	RES M/F 0805 100K 5%
R877		036-16100-00	RES M/F 0805 100K 5%
R878		036-16100-00	RES M/F 0805 100K 5%
R879		036-16100-00	RES M/F 0805 100K 5%
R881		036-15470-00	RES M/F 0805 47K 5%
R882		036-15470-00	RES M/F 0805 47K 5%
R884		036-16150-00	RES M/F 0805 150K 5%
R885		036-16150-00	RES M/F 0805 150K 5%
R886		036-15100-10	RES M/F 0805 10K 1%
R887		036-14100-10	RES M/F 0805 CHIP 1K 1%
R888		036-14820-10	RES M/F 0805 8K2 1%
R889		036-16100-00	RES M/F 0805 100K 5%
R890		036-16150-00	RES M/F 0805 150K 5%
R891		036-16100-00	RES M/F 0805 100K 5%
R892		036-16330-00	RES M/F 0805 330K 5%
R894		036-14470-00	RES M/F 0805 4K7 5%
R895		036-15100-00	RES M/F 0805 10K 5%
R897		036-15100-00	RES M/F 0805 10K 5%
R898		036-16470-00	RES M/F 0805 470K 5%
R910		036-15100-00	RES M/F 0805 10K 5%
RL210		237-00010-22	RELAY 12V DPDT 8PIN DIL PCB MT
RV205		040-05100-22	POT 10K LOG DUAL PCB 6 OD SFT
RV210		040-05100-23	POT 10K LOG PCB 15MM SLOT SFT
RV220		042-05100-06	RES PRE 10K CAR 6MM FLAT
RV230		040-05100-21	POT 10K LIN PCB 15MM SLOT SFT
RV235		042-05100-06	RES PRE 10K CAR 6MM FLAT
RV320		042-05470-06	RES PRE 47K CAR 6MM FLAT T/ADJ
RV330		042-04220-06	RES PRE 2K2 CAR 6MM FLAT
SHLD610		062-00010-13	CAN 10MM SQ X 11MM CAN A4M1017
SK501		240-04021-77	SKT JACK 1.3 PCB MT 64W
SK502		240-04021-77	SKT JACK 1.3 PCB MT 64W
SK503		240-04021-77	SKT JACK 1.3 PCB MT 64W
SK504		240-04021-77	SKT JACK 1.3 PCB MT 64W
SK505		240-04021-77	SKT JACK 1.3 PCB MT 64W
SK513		240-04021-77	SKT JACK 1.3 PCB MT 64W
SK522		240-04021-77	SKT JACK 1.3 PCB MT 64W
SK531		240-04021-77	SKT JACK 1.3 PCB MT 64W
SK532		240-04021-77	SKT JACK 1.3 PCB MT 64W
SK533		240-04021-77	SKT JACK 1.3 PCB MT 64W
SK534		240-04021-77	SKT JACK 1.3 PCB MT 64W
SK535		240-04021-77	SKT JACK 1.3 PCB MT 64W
SK805		240-10000-07	CONN SMD SKT 16W 2R M-MATCH
SK810		240-04020-42	SKT 44 PIN SMD PLCC
SW201		230-00010-30	SWITCH TOG SPDT R-ANG PCB MTG
T210		053-00010-17	XFMR T4030 LINE MATCH POTCORE
T610		050-00016-50	COIL TAIT NO 650 455KHZ
X310		274-00010-02	XTAL 20.945MHZ SPEC TE/15
&XF310	10	276-00010-43	FLTR XTAL 21.4M 15KHZ PR 4POLE
&XF310	13	276-00010-43	FLTR XTAL 21.4M 15KHZ PR 4POLE
&XF310	15	276-00010-44	FLTR XTL 21.4M 7.5KHZ PR 4POLE
&XF310	20	276-00010-43	FLTR XTAL 21.4M 15KHZ PR 4POLE
&XF310	23	276-00010-43	FLTR XTAL 21.4M 15KHZ PR 4POLE
&XF310	25	276-00010-44	FLTR XTL 21.4M 7.5KHZ PR 4POLE
&XF320	10	276-00010-43	FLTR XTAL 21.4M 15KHZ PR 4POLE
&XF320	13	276-00010-43	FLTR XTAL 21.4M 15KHZ PR 4POLE
&XF320	15	276-00010-44	FLTR XTL 21.4M 7.5KHZ PR 4POLE
&XF320	20	276-00010-43	FLTR XTAL 21.4M 15KHZ PR 4POLE
&XF320	23	276-00010-43	FLTR XTAL 21.4M 15KHZ PR 4POLE
&XF320	25	276-00010-44	FLTR XTL 21.4M 7.5KHZ PR 4POLE
&XF330	10	276-00010-47	FLTR XTAL 21.4MHZ 15KHZ 2POLE
&XF330	13	276-00010-47	FLTR XTAL 21.4MHZ 15KHZ 2POLE
&XF330	15	276-00010-46	FLTR XTAL 21.4MHZ 7.5KHZ 2POLE
&XF330	20	276-00010-47	FLTR XTAL 21.4MHZ 15KHZ 2POLE
&XF330	23	276-00010-47	FLTR XTAL 21.4MHZ 15KHZ 2POLE
&XF330	25	276-00010-46	FLTR XTAL 21.4MHZ 7.5KHZ 2POLE
&XF340	10	276-00010-14	FLTR CER 455KHZ 15KHZ B/W
&XF340	13	276-00010-76	FLTR CER 455KHZ 12KHZ B/W
&XF340	15	276-00010-13	FLTR CER 455KHZ 9KHZ B/W
&XF340	20	276-00010-14	FLTR CER 455KHZ 15KHZ B/W
&XF340	23	276-00010-76	FLTR CER 455KHZ 12KHZ B/W
&XF340	25	276-00010-13	FLTR CER 455KHZ 9KHZ B/W

T835 Mechanical & Miscellaneous Parts (220-01394-02)

IPN	Legend	Description
012-04150-01		CAP CER F/THRU 1N5 NO LEAD Fitted to D-range pins.
051-00006-02		SOLDER SPRING 1.3MM A4M1877 Support for front panel LED solder joints.
065-00010-13		BEAD FER 7D 1.9X0.9X3.8 Fitted to D-range pins.
201-00030-02		WIRE T/C 7/0.2 PVC RED Front panel LEDs.
201-00030-10		WIRE T/C 7/0.2 PVC BLACK Front panel LEDs.
220-01176-03	1	PCB T83X VCO
220-01394-02	2	PCB T835 SERIES II
230-00010-31	3	SWITCH COVER FOR 230-00010-30
240-00010-55	25	PLUG 15 W D-RANGE W/W PNL MT PL100
240-02100-06	4	SKT COAX N TYPE PNL MTG OP-TER
240-04020-62		SKT 2 W RECEP SHORTING LINK PL210/220/230/240/250/260/270
303-11169-03	5	CHASSIS PAINTED T800 SERIES
303-23118-00	6	COVER A3M2247 D RANGE
303-50074-00	7	CLIP A3M2246 SPRING CLAMP
308-01007-01	8	HANDLE BASE STATION SERIES II
311-01015-00	9	KNOB 15MM & SKIRT 6MM SFT
312-01052-01	10	LID TOP PNTD A1M2364 T800
312-01053-01	11	LID BOTTOM PNTD A1M2364 T800
316-06622-00	12	PNL FRT RX T800 SERIES II
319-01152-00	13	SHIELD A3M2250 F/THRU MTG T857
345-00040-10	14	SCRW M3X6MM P/POZ ST BZ
349-00020-36	15	LIM)SCREW TT M3X8m PANTORX BLK
349-00020-43	16	SCRW T/T M4X12MM P/POZ BZ
349-00020-45	17	SCRW T/T M4X20MM P/POZ BZ
350-00016-42	18	SPACER 5MM HI 8MM ST 2.5MM HO
352-00010-08	19	NUT M3 COLD FORM HEX ST BZ
352-00010-29	20	NUT M4 NYLOC HEX
353-00010-10	21	WSHR M3 FLAT 7MMX0.6MM ST BZ
353-00010-13	22	WSHR M3 S/PROOF INT BZ
356-00010-03		TAG SOLDER 3MM LONG M614/3.2 Main PCB to chassis earth strap (via D-range shield).
362-00010-23	23	GASKET SIL TO-220 CLIP MTG.
362-00010-33	24	GROMMET LED MTG 3MM
365-00011-53		LABEL 104X37MM
365-00100-09		LABEL WHITE VINYL 15X11MM S/A
365-00100-20		LABEL WHITE S/A 28X11MM
365-01541-00		LABEL TX/RX/EX TYPE APR/SER NO
399-00010-51		BAG PLASTIC 75X100MM
400-00020-07		SLEEVING 2MM SIL RUBBER
410-01081-01		CRT T800 SERIES II

 Copyright TEL

replace A4 pages B6.2.9/B6.2.10 with A3 pages B6.2.9/B6.2.10

replace A4 pages B6.2.9/B6.2.10 with A3 pages B6.2.9/B6.2.10

Copyright TEL

T835 Grid Reference Index (IPN 220-01394-02)

How To Use This Grid Reference Index

The first digit in the PCB layout reference is a "1" or "2", indicating the top or bottom side layout respectively, and the last two characters give the location of the component on that diagram.

The first digit in the circuit diagram reference is the sheet number, and the last two characters give the location of the component on that sheet.

Device	PCB	Circuit
C201	1:D7	2-B9
&C203	2:C6	2-B8
C205	2:C6	2-B8
C207	1:D6	2-C8
C209	1:C7	2-E8
C210	2:C7	2-C7
C211	2:C7	2-D7
C213	2:C7	2-E7
C215	2:C7	2-E7
C217	2:C7	2-E7
C219	2:C6	2-H6
C221	2:C6	2-H6
C222	1:C6	2-J9
C223	2:C6	2-H8
C225	2:C6	2-J8
C227	2:C6	2-J8
C229	1:C6	2-K8
C231	1:B3	2-K8
C233	1:B7	2-J7
C235	2:C5	2-M6
C237	2:C6	2-M5
C238	2:C5	2-N7
C239	1:C5	2-P6
C240A	2:B5	2-Q8
C240B	2:B5	2-R8
C240C	1:C5	2-R8
C249	1:B5	2-Q7
C251	2:A5	2-R7
C253	1:C8	2-G5
C255	2:B7	2-L2
C257	2:B6	2-M2
C259	2:B6	2-M3
C260A	2:B6	2-P4
C260B	2:B6	2-P4
C260C	1:B6	2-P4
C261	1:C6	2-N2
C262	1:B5	2-P3
C264	2:B5	2-P2
C266	1:D2	2-R3
C268	1:D3	2-R3
C270	2:B8	2-E3
C272	2:B8	2-D1
C274	2:B8	2-E1
C276	2:C4	2-B0
C278	2:C4	2-C0
C280	2:C4	2-F1
C286	2:B8	2-F1
C301	2:F8	3-B7
C303	2:F8	3-B6
C305	1:F7	3-B7
C307	2:F8	3-C7
C309	2:F8	3-D7
C311	2:F8	3-E7
&C313	2:F7	3-F7
&C315	2:F7	3-G6
&C317	2:F7	3-H6
&C319	2:F7	3-J6
&C321	2:F6	3-J7
C323	2:F6	3-K7
C325	1:F5	3-K8
C327	2:F5	3-L8
C329	2:F5	3-M6
C331	2:F5	3-M7
&C333	2:F5	3-N7
&C335	2:F5	3-P6
&C337	2:F4	3-Q6
C339	2:F4	3-R7
C340A	1:F4	3-A2
C340B	2:F4	3-B2
C344	2:F4	3-B1
C345	2:F4	3-B2
C347	2:F4	3-C2
C348	1:F4	3-C2
C349	2:E4	3-D2
C351	2:E4	3-D0
C353	2:E3	3-D0
C355	2:E4	3-D1
C357	2:E4	3-E2
C359	2:E4	3-E2
C361	2:E4	3-E1
C363	2:E4	3-E1
C365	2:E4	3-F2
C367	2:E4	3-F0
C369	2:E5	3-G3
C371	1:E5	3-G3
C373	1:E6	3-G1
C375	1:E5	3-H2
C376	2:E7	3-J3
C377	2:E7	3-K3
C381	2:E6	3-K3
C383	2:E6	3-J4
C385	2:E7	3-L2
C390	1:E6	3-L3
C391	2:E7	3-N1
C392	2:E7	3-N3
C393	2:E7	3-N2
C394	2:E7	3-N3
C395	2:E8	3-P3
C397	2:E8	3-Q2
C399	2:E8	3-R2
C402	2:N8	4-B4
C404	2:N8	4-B5
C406	2:N8	4-B5
C408	2:M8	4-B4
C410	2:M8	4-C4
C412	2:M8	4-C5
C414	2:M8	4-C4
C416	2:M8	4-D4
C418	2:M8	4-D5
C420	2:M8	4-D5
C422	2:L8	4-D4
C424	2:L8	4-E4
C428	2:L8	4-E4
C430	2:L8	4-F4
C432	2:L8	4-F5
C436	2:K8	4-G5
C438	2:K8	4-G4
C440	2:K7	4-H6
C442	2:K7	4-H5
C446	2:K8	4-J5
C448	2:J8	4-J4
C450	2:J8	4-J4
C452	2:J8	4-K4
C454	2:J8	4-K4
C456	2:J8	4-L4
C458	2:J8	4-K4
C462	2:J8	4-L5
C464	2:J8	4-L4
C468	2:J8	4-L4
C470	2:H8	4-L4
C472	2:H8	4-M4
C478	2:G7	4-Q4
C480	2:G8	4-Q4
C505	1:K6	5-L8
C515	1:H5	5-F3
C530	1:K5	5-K1
C535	1:K5	5-L1
C610A	1:M5	6-C8
C610B	1:M5	6-D8
C611A	1:L5	6-E8
C611B	1:M5	6-F8
C623	1:M6	6-N8
C625	1:M6	6-Q8
C626	1:M6	6-R8
C628	1:M6	6-R8
C630	1:M5	6-K4
C631A	1:M5	6-M6
C631B	1:N5	6-M6
C637	1:M6	6-P5
C640	1:M5	6-R5
C651	1:M5	6-M4
C658	1:M5	6-J1
C660	1:L5	6-K1
C665	1:L5	6-K1
C670	1:L6	6-L1
C673	1:L5	6-P2
C677	1:M6	6-P1
C681	1:M5	6-R3
C684	1:M6	6-R3
C687	1:L6	6-Q1
C690	1:L6	6-R1
C693	1:L6	6-R1
C700	1:J4	7-A8
C702	1:J4	7-B8
C703	1:J3	7-B7
C705	1:J3	7-B7
C707	1:J3	7-B5
C708	1:J3	7-B5
C709	1:H3	7-C5
C710A	1:H3	7-D8
C710B	1:H4	7-D8
C710C	1:J3	7-F8
C711	1:J2	7-E7
C712	1:H2	7-E7
C713	1:H2	7-F7
C735	1:J2	7-A1
C736	1:J2	7-B1
C740A	1:H2	7-B4
C740B	1:H2	7-B3
C741A	1:H2	7-C4
C741B	1:G2	7-C3
C742A	1:H2	7-D4
C742B	1:H3	7-D3
C743	1:H2	7-B1
C745	1:G3	7-D1
C750	1:H4	7-H7
C757	1:G4	7-G5
C759	1:G4	7-G4
C761	1:H3	7-J4
C762	1:G3	7-K4
C764	1:H3	7-J2
C765	1:G3	7-J2
C767	1:H3	7-K3
C769	1:H4	7-M4
C770	1:H3	7-N4
C772	1:G4	7-M2
C774	1:H4	7-P2
C776	1:H4	7-N1
C782	1:G3	7-N0
C784	1:G2	7-Q1
C786	1:G2	7-R1
C788	1:G3	7-N0
C790	1:G3	7-Q0
C792	1:G4	7-R0
C810	1:L4	8-K8
C812	1:K2	8-E5
C813	1:J3	8-H5
C814	1:L2	8-Q4
C815	1:N3	8-B2
C816	1:N3	8-B2
C818	1:N3	8-C1
C819	1:N3	8-D1
C820	1:N4	8-E1
C822	1:N3	8-D2
C824	1:N3	8-D2
C826	1:N3	8-D0
C828	1:N3	8-D0
C830	1:M4	8-F1
C832	1:M3	8-G2
C833	1:M4	8-G1
C834	1:M3	8-H2
C836	1:M3	8-G0
C837	1:M3	8-G0
C838	1:N4	8-H0
C840	1:M2	8-K1
C842	1:N2	8-L0
C844	1:N3	8-L0
C846	1:M2	8-M0
C848	1:N2	8-M0
C850	1:M2	8-N0
C873	1:M4	8-N2
C876	1:M4	8-P2
C879	1:M3	8-Q0
C910	2:P6	9-E6
C920	2:P7	9-F6
C930	2:P7	9-G6

Copyright TEL

Device	PCB	Circuit
C940	2:P8	9-H6
CTP310	2:F8	3-E7
CTP320	2:F6	3-K7
CTP330	2:F5	3-N7
CTP410	2:L8	4-E4
CTP420	2:K8	4-H4
CTP430	2:H8	4-N4
CTP440	2:G8	4-R4
CTP910	2:N8	9-J6
CV318	1:F7	3-H6
D111	1:P4	1-R1
D220	2:D8	2-E4
D220	2:D8	2-E4
D230	2:C6	2-J5
D230	2:C6	2-J4
D240	2:C8	2-D3
D240	2:C8	2-D2
D250	1:B7	2-H1
D260	2:A7	2-H1
D270	2:B7	2-J1
D270	2:B7	2-H1
D280	1:B7	2-K1
D285	1:D2	2-L1
D289	1:C2	2-K0
D290	1:C2	2-L0
D295	1:C2	2-L0
D310	2:E8	3-P2
D310	2:E8	3-P2
D610	1:N5	6-L6
D610	1:N5	6-M6
D640	1:L5	6-M1
D640	1:L5	6-M2
D730	1:H3	7-H1
D740	1:H3	7-K2
D820	1:J3	8-B7
D860	1:M2	8-N0
D860	1:M2	8-N0
D880	1:M2	8-R2
D880	1:M2	8-R2
IC210	1:C7	2-G7
IC210	1:C7	2-C7
IC210	1:C7	2-F7
IC240	1:B5	2-P7
IC260	1:B6	2-N2
IC270	1:B8	2-F3
IC270	1:B8	2-E2
IC270	1:B8	2-B2
IC280	1:C4	2-B0
IC280	1:C4	2-D0
IC280	1:C4	2-E1
IC340	1:F4	3-B1
IC350	1:E4	3-D1
IC390	1:E6	3-H3
IC390	1:E6	3-L3
IC390	1:E6	3-L0
IC390	1:E6	3-H0
IC390	1:E6	3-K3
IC410	1:H7	4-P4
IC610	1:M5	6-D8
IC630	1:N5	6-K5
IC640	1:M5	6-N5
IC640	1:M5	6-J0
IC640	1:M5	6-R5
IC650	1:L5	6-E5
IC700	1:J3	7-A8
IC710	1:H3	7-E8
IC710	1:H3	7-J0
IC710	1:H3	7-C6
IC710	1:H3	7-D6
IC710	1:H3	7-D7
IC740	1:H2	7-D1
IC750	1:H4	7-M3

Device	PCB	Circuit
IC750	1:H4	7-H6
IC750	1:H4	7-H5
IC820	1:L4	8-N5
IC830	1:N4	8-J0
IC830	1:N4	8-F1
IC830	1:N4	8-F0
IC830	1:N4	8-H2
IC830	1:N4	8-E2
IC840	1:M2	8-L0
IC850	1:M3	8-N1
IC850	1:M3	8-M2
IC850	1:M3	8-Q2
IC850	1:M3	8-M0
IC850	1:M3	8-M2
L230	1:D2	2-K2
L310	1:F8	3-B7
L320	1:F8	3-C7
L330	1:F7	3-G7
L340	1:F7	3-J7
L350	1:F5	3-P7
L360	1:E5	3-F2
L410	1:M8	4-C5
L420	1:L8	4-D5
L430	1:L8	4-F4
L440	1:M7	4-G6
L450	1:K8	4-G5
L460	1:J8	4-K4
L470	1:H8	4-M4
L480	1:G8	4-P4
L490	1:G8	4-Q4
L750	1:G4	7-R0
L910	1:P6	9-F7
L920	1:P7	9-G7
L930	1:P8	9-H7
P100	1:P6	1-R8
P160	1:P2	1-Q4
P170	1:P2	1-R4
P201	1:D4	2-A9
P204	1:D7	2-A9
P207	1:D6	2-A8
P210	1:D6	2-C7
P213	1:D3	2-A7
P216	1:B2	2-A7
P219	1:D7	2-A7
P222	1:C5	2-A6
P225	1:C8	2-A4
P228	1:D8	2-A4
P231	1:C7	2-A4
P234	1:B7	2-A3
P236	1:C8	2-A1
P238	1:D3	2-A1
P240	1:C8	2-G2
P242	1:C7	2-G1
P244	1:C7	2-G8
P246	1:C6	2-H9
P248	1:C6	2-H9
P250	1:B3	2-K9
P252	1:B2	2-K9
P254	1:B2	2-K9
P256	1:B2	2-L8
P258	1:D3	2-P8
P260	1:D3	2-P7
P263	1:B2	2-R6
P266	1:D2	2-R5
P268	1:B2	2-R5
P270	1:B2	2-R5
P280	1:B2	2-R4
P282	1:B2	2-R4
P284	1:B3	2-R4
P287	1:B2	2-R0
P380	1:D3	3-R0
P810	1:K2	8-A5
P815	1:L4	8-C4
P820	1:K4	8-M8

Device	PCB	Circuit
P825	1:K4	8-M8
P830	1:K4	8-M8
P835	1:K4	8-M7
P840	1:K4	8-M7
PL100	1:P3	1-F0
PL210	1:C6	2-B8
PL220	1:C6	2-H7
PL230	1:B2	2-K8
PL240	1:B6	2-K7
PL250	1:C8	2-C2
PL260	1:C8	2-H3
PL270	1:C2	2-L1
Q210	2:C6	2-J8
Q220	2:C5	2-M6
Q230	2:C5	2-N6
Q240	2:C8	2-H4
Q245	2:B6	2-J4
Q250	2:B8	2-G2
Q255	2:B7	2-H2
Q260	2:B7	2-K0
Q270	2:C2	2-K0
Q280	2:B7	2-L2
Q290	2:B6	2-M2
Q310	1:F8	3-C7
Q320	2:F6	3-L7
Q330	2:F6	3-M7
Q340	2:E7	3-M2
Q350	2:E7	3-P2
Q410	2:L8	4-F5
Q420	2:K8	4-G4
Q540	1:K5	5-K2
Q620	1:N6	6-P8
Q630	1:M6	6-P5
Q660	1:L5	6-N1
Q670	1:L6	6-Q2
Q750	1:G4	7-G3
Q760	1:G3	7-J3
Q770	1:H3	7-J1
Q775	1:H3	7-K3
Q780	1:H3	7-K3
Q785	1:H3	7-K2
Q790	1:H4	7-L3
Q795	1:G3	7-P0
Q810	1:K2	8-C5
Q820	1:K2	8-C6
Q840	1:K2	8-F5
Q850	1:L2	8-G5
Q860	1:K4	8-B4
Q870	1:L4	8-C4
Q880	1:L2	8-L5
Q890	1:L4	8-K3
Q895	1:M3	8-P2
R160	1:P2	1-Q4
R201	2:D6	2-B8
&R202	2:D6	2-B7
R204	2:C6	2-C9
R205	2:C7	2-C8
R207	2:C7	2-D8
&R209	2:C7	2-D8
R210	2:C7	2-D8
R211	2:C7	2-E8
R213	2:C7	2-G6
R215	2:C6	2-G9
R218	2:C7	2-G8
&R219	2:C7	2-G7
R221	2:C7	2-H7
R222	2:C7	2-H7
%R223	2:D6	2-J9
R224	2:C6	2-J8
R225	2:C6	2-J8
R227	2:B7	2-J7
R229	2:C5	2-L6
R230	2:C6	2-M5

Device	PCB	Circuit
R232	2:B5	2-M7
R233	2:C5	2-M7
R234	2:C5	2-N7
R236	2:B5	2-N7
R238	2:A5	2-R6
R239	2:B5	2-R6
R241	2:D8	2-G5
R242	2:C8	2-G4
R244	2:C8	2-G4
R245	2:C8	2-H5
R247	2:B7	2-J4
R249	2:B6	2-J3
R251	2:B7	2-L3
R252	2:B7	2-L3
R254	2:B7	2-L3
R255	2:B7	2-M3
R256	2:B6	2-M3
R258	2:B6	2-N3
R260	2:B5	2-P2
R261	2:B4	2-Q3
R262	2:B3	2-Q3
R264	2:B8	2-A3
R265	2:B8	2-A2
R266	2:B8	2-B2
R267	2:C8	2-C3
R269	2:C8	2-B1
R271	2:D3	2-A0
R272	2:C4	2-B1
R273	2:C4	2-C1
R275	2:C4	2-C1
R277	2:C4	2-C0
R278	2:C4	2-C1
R280	2:C8	2-D3
R281	2:C8	2-D2
R282	2:B8	2-E2
R284	2:C8	2-F3
R285	2:B8	2-F2
R287	2:B8	2-F2
R288	2:B8	2-F1
R289	2:B7	2-G3
R290	2:B7	2-H3
R292	2:C8	2-G2
R293	2:B7	2-H1
R294	2:C3	2-H0
R295	2:B7	2-J1
R296	2:A7	2-K1
R297	1:B2	2-M0
R298	2:D7	2-J0
R299	2:C7	2-J0
R301	2:F8	3-B6
R302	2:F8	3-B6
R303	2:F8	3-C7
R305	2:F7	3-C8
R307	2:F8	3-D7
R309	2:E8	3-F6
R311	2:F8	3-F7
R313	2:E8	3-F6
R315	2:F6	3-L6
R317	2:F6	3-L6
R319	2:F6	3-L7
R321	2:F6	3-L8
R323	2:F6	3-L7
R325	2:F6	3-L8
R327	2:F5	3-M8
R329	2:F6	3-M7
R331	2:F5	3-M6
R332	2:F4	3-B3
&R333	2:F4	3-Q6
R333	2:E4	3-C2
R334	2:F3	3-C1
R335	2:E3	3-D1
R337	2:E4	3-D2
%R338	2:E5	3-F3
R339	2:E5	3-G3
R341	2:E6	3-H3
R343	2:E6	3-G2

 Copyright TEL

Device	PCB	Circuit
R345	2:E6	3-G1
&R347	2:E6	3-H2
R349	2:E6	3-H2
R351	1:E6	3-J2
R353	2:E6	3-J4
R355	2:E7	3-J3
R357	2:E7	3-K3
R359	2:E6	3-K3
R361	2:E6	3-K2
R363	2:E7	3-L2
R365	2:E7	3-M1
R367	2:E7	3-M1
R369	2:E7	3-M3
R371	1:E7	3-M3
R372	2:E7	3-M3
R374	2:E7	3-N3
R376	2:E7	3-N2
R378	2:E7	3-N3
R380	2:E6	3-P4
R381	2:E7	3-P3
R383	2:E8	3-P3
R385	2:E8	3-Q2
R387	2:E8	3-Q3
R389	2:E8	3-Q3
R391	2:E4	3-G0
R393	2:F4	3-G0
R395	2:E5	3-G0
R397	2:E5	3-G0
R398	2:E6	3-H0
R399	2:E5	3-J0
R410	2:K7	4-E6
R413	2:L7	4-E5
R416	2:L8	4-F5
R418	2:K8	4-F4
R419	2:K8	4-G4
R422	2:L8	4-G4
R425	2:K8	4-G5
R427	2:K7	4-G6
R428	2:K7	4-G6
R432	2:K8	4-H4
R435	2:K8	4-H4
R438	2:K8	4-J4
R441	2:H8	4-M4
R444	2:H8	4-N4
R447	2:H8	4-N4
R453	2:H7	4-P5
R456	2:H7	4-Q5
R459	2:H7	4-Q5
R464	2:G7	4-Q4
R510	1:K6	5-J9
R515	1:H6	5-J5
R555	1:K5	5-K1
R615	1:M5	6-C9
R617	1:M5	6-F8
R619	1:M6	6-L8
R621	1:M6	6-L8
R625	1:N6	6-L7
R629	1:M5	6-P6
R633	1:M5	6-Q8
R636	1:N5	6-K6
R637	1:N5	6-K5
R641	1:N5	6-L4
R645	1:N5	6-L5
R649	1:M5	6-M5
R653	1:M5	6-Q4
R681	1:L5	6-L2
R685	1:L5	6-N2
R689	1:L6	6-Q3
R693	1:L6	6-Q1
R696	1:L6	6-Q1
R701	1:J4	7-A9
R702	1:J4	7-C9
R703	1:J4	7-C8
R706	1:J3	7-B6
R707	1:J3	7-C7
R708	1:J2	7-D7

Device	PCB	Circuit
R709	1:H2	7-E7
R710	1:J3	7-B6
R711	1:H3	7-B6
R712	1:J4	7-E9
R742	1:H2	7-B4
R743	1:H2	7-C5
R744	1:G2	7-D4
R746	1:H3	7-E4
R747	1:H3	7-E5
R748	1:J2	7-A1
R749	1:J2	7-B1
R750	1:H4	7-H7
R752	1:G4	7-F5
R753	1:G4	7-F3
R754	1:G3	7-F3
R756	1:G3	7-G5
R757	1:G4	7-H4
R758	1:H3	7-J4
R759	1:H3	7-J4
R760	1:H3	7-K4
R762	1:H3	7-K4
R763	1:H4	7-L4
R765	1:H3	7-J2
R766	1:G3	7-J3
R767	1:H3	7-K2
R769	1:H3	7-L3
R771	1:H4	7-L3
R772	1:G4	7-M2
R774	1:H4	7-M2
R775	1:H4	7-N2
R784	1:G3	7-P1
R785	1:G3	7-Q1
R786	1:G2	7-R1
R787	1:G2	7-R1
R790	1:G3	7-P0
R791	1:G3	7-Q0
R792	1:G3	7-Q0
R804	1:J3	8-C7
R805	1:J3	8-C7
R808	1:K2	8-B6
R809	1:K2	8-C6
R810	1:L2	8-D6
R811	1:L2	8-D6
R812	1:K2	8-C6
R813	1:K2	8-C5
R815	1:K2	8-E4
R816	1:K2	8-F4
R818	1:K2	8-F5
R819	1:L2	8-F5
R820	1:K4	8-B4
R821	1:L4	8-C4
R822	1:L4	8-D3
R823	1:L4	8-D4
R824	1:K4	8-L8
R825	1:K4	8-L8
R826	1:K4	8-L8
R827	1:K4	8-L7
R828	1:K4	8-L7
R829	1:K4	8-P9
R830	1:K3	8-P9
R831	1:K3	8-P9
R832	1:K3	8-P8
R833	1:K3	8-P8
R835	1:K3	8-P8
R836	1:K3	8-P8
R837	1:K3	8-P7
R840	1:K3	8-P7
R841	1:K3	8-P7
R842	1:K3	8-P6
R843	1:K3	8-P6
R844	1:L2	8-M5
R845	1:L2	8-M5
R846	1:L4	8-L6
R847	1:L4	8-M6
R848	1:L4	8-Q5
R849	1:J2	8-Q5

Device	PCB	Circuit
R850	1:J2	8-Q4
R851	1:L4	8-Q4
R852	1:L2	8-N4
R853	1:L2	8-Q4
R854	1:N3	8-C1
R855	1:N3	8-C2
R856	1:N3	8-D2
R857	1:N4	8-D2
R858	1:N3	8-C0
R859	1:N3	8-D0
R860	1:N3	8-E0
R861	1:M3	8-F0
R863	1:N3	8-F2
R865	1:M3	8-G2
R866	1:M3	8-H2
R867	1:M3	8-G1
R868	1:N4	8-G0
R869	1:M3	8-G0
R870	1:M3	8-H0
R871	1:N3	8-H0
R872	1:N4	8-H0
R873	1:N4	8-K0
R875	1:M4	8-J1
R876	1:M3	8-K1
R877	1:M2	8-K1
R878	1:M2	8-K0
R879	1:M2	8-K0
R881	1:M4	8-K2
R882	1:M4	8-L3
R884	1:M3	8-N3
R885	1:M3	8-N2
R886	1:M3	8-P3
R887	1:M3	8-P3
R888	1:M3	8-P2
R889	1:M3	8-M1
R890	1:M3	8-N1
R891	1:M2	8-M1
R892	1:M2	8-N0
R894	1:M2	8-P0
R895	1:M2	8-Q1
R897	1:M2	8-Q1
R898	1:M2	8-Q2
R910	2:P6	9-D6
RL210	1:C2	2-P4
RL210	1:C2	2-K1
RL210	1:C2	2-P5
RV205	1:B5	2-M7
RV210	1:B7	2-K3
RV220	1:D7	2-G5
RV230	1:B8	2-A2
RV235	1:C4	2-C0
RV320	1:E4	3-G0
RV330	1:E7	3-N2
SHLD610	1:L6	6-J3
SK501	1:G6	5-D6
SK502	1:G6	5-D5
SK503	1:G6	5-D4
SK504	1:G5	5-D3
SK505	1:G5	5-D2
SK513	1:H5	5-G3
SK522	1:H6	5-K5
SK531	1:K6	5-N6
SK532	1:K5	5-N5
SK533	1:K5	5-N4
SK534	1:K5	5-N3
SK535	1:K5	5-N2
SK805	1:K3	8-Q5
SK805	1:K3	8-Q6
SK805	1:K3	8-Q7
SK805	1:K3	8-Q8
SK805	1:K3	8-Q9
SK810	1:L3	8-H5

Device	PCB	Circuit
SL210	2:B8	2-E2
SL220	2:B8	2-D2
SL405	2:N7	4-B5
SL410	2:M8	4-C5
SL415	2:M7	4-D5
SL420	2:K8	4-J5
SL425	2:K8	4-H4
SL430	2:K7	4-J5
SL435	2:J8	4-K4
SL440	2:J7	4-L5
SW201	1:B4	2-A6
T210	1:C3	2-Q2
T610	1:L6	6-N2
TP202	1:D7	2-D9
TP211	1:D3	2-P8
TP310	1:E5	3-K0
TP601	1:N5	6-K9
TP602	1:L6	6-R9
TP603	1:L5	6-J2
TP604	1:L4	6-N6
TP607	1:L4	6-F9
TP710	1:H4	7-J5
X310	1:F3	3-C2
&XF310	1:F7	3-G7
&XF320	1:F7	3-J7
&XF330	1:F5	3-P7
&XF340	1:E3	3-C1

Copyright TEL

Part C T836 Transmitter & T837 Exciter

This part of the manual is divided into six sections, as listed below. There is a detailed table of contents at the start of each section.

Section	Title
1	General Information
2	Circuit Operation
3	Initial Tuning & Adjustment
4	Functional Testing
5	Fault Finding
6	PCB Information

Copyright TEL

1 T836/837 General Information

This section provides a brief description of the T836 transmitter and T837 exciter, along with detailed specifications and a list of types available.

The following topics are covered in this section.

Section	Title	Page
1.1	**Introduction**	**1.7**
1.2	**Specifications**	**1.8**
1.2.1	Introduction	1.8
1.2.2	General	1.8
1.2.3	RF Section	1.9
1.2.4	Audio Processor	1.10
1.2.4.1	Inputs	1.10
1.2.4.2	Modulation Characteristics	1.10
1.2.4.3	CTCSS	1.11
1.2.5	Microcontroller	1.12
1.2.6	Test Standards	1.12
1.3	**Product Codes**	**1.13**
1.4	**T836 Standard Product Range**	**1.14**
1.5	**T837 Standard Product Range**	**1.15**

Figure	Title	Page
1.1	T836 Main Circuit Block Identification	1.4
1.2	T836 Front Panel Controls	1.4
1.3	T837 Main Circuit Block Identification	1.6
1.4	T837 Front Panel Controls	1.6

Copyright TEL

replace A4 pages C1.3/C1.4 with A3 pages C1.3/C1.4

replace A4 pages C1.3/C1.4 with A3 pages C1.3/C1.4

Copyright TEL

replace A4 pages C1.5/C1.6 with A3 pages C1.5/C1.6

replace A4 pages C1.5/C1.6 with A3 pages C1.5/C1.6

Copyright TEL

1.1 Introduction

The T836 is a synthesised, microprocessor controlled FM base station transmitter designed for single or multichannel operation in the 136 to 174MHz frequency range[1] with a standard power output of 25W. The RF section of the transmitter comprises a frequency synthesiser which provides 170mW of frequency modulated RF drive to a two stage, wide band output driver followed by a 25W power amplifier. A thermal shutdown feature is provided in the T836 in case operating temperatures exceed acceptable levels.

The T837 is a synthesised, microprocessor controlled FM base station exciter designed for single or multichannel operation in the 136 to 174MHz frequency range[1]. With a standard power output of only 800mW, the exciter is designed for use with the T838 50W or T839 100W power amplifiers. The RF section of the exciter comprises a frequency synthesiser which provides 170mW of frequency modulated RF drive to a two stage, wide band output amplifier.

A wide selection of audio characteristics may be obtained from the audio processor. Optional circuit blocks are an audio compressor and a pre-emphasis stage. They can be bypassed or linked to one or both audio inputs, and then back into the remaining audio circuitry in almost any combination. All audio processor options are link selectable.

The synthesiser frequency is programmed via the serial communications port. Eight channel select lines are accessible via an optional D-range connector (D-range 2 - T800-03-0000) at the rear of the set.

All components except those of the VCO are mounted on a single PCB. This is secured to a die-cast chassis which is divided into compartments to individually shield each section of circuitry. Access to both sides of the main circuit board is obtained by removing each of the chassis lids. There is provision within the chassis to mount small option PCBs.

The front panel controls include line sensitivity, microphone socket and carrier switch. This switch turns on the carrier (unmodulated) as an aid to servicing.

The T836 and T837 are both 60mm wide and each occupies a single space in a Tait rack frame, which has the ability to accommodate up to seven standard modules.

1. Although capable of operating over the 136-174MHz frequency range, the T836 and T837 have an 8MHz switching range (see Section 1.2.3 and Section 3.1).

1.2 Specifications

1.2.1 Introduction

The performance figures given are minimum figures, unless otherwise indicated, for equipment tuned with the maximum switching range and operating at standard room temperature (+22°C to +28°C) and standard test voltage (13.8V DC).

Where applicable, the test methods used to obtain the following performance figures are those described in the EIA and ETS specifications. However, there are several parameters for which performance according to the CEPT specification is given. Refer to Section 1.2.6 for details of test standards.

Details of test methods and the conditions which apply for Type Approval testing in all countries can be obtained from Tait Electronics Ltd.

The terms "wide bandwidth", "mid bandwidth" and "narrow bandwidth" used in this and following sections are defined in the following table.

	Channel Spacing	Modulation 100% Deviation	Receiver IF Bandwidth
Wide Bandwidth	25kHz	±5.0kHz	15.0kHz
Mid Bandwidth	20kHz	±4.0kHz	12.0kHz
Narrow Bandwidth	12.5kHz	±2.5kHz	7.5kHz

1.2.2 General

Number Of Channels .. 128 (standard)[1]

Supply Voltage:

- Operating Voltage .. 10.8 to 16V DC
- Standard Test Voltage .. 13.8V DC
- Polarity .. negative earth only
- Polarity Protection .. crowbar diode
- Line Keying Supply (if required) .. -50V DC

Supply Current:

- Transmit - T836 .. 4.5A (typical)
- Transmit - T837 .. 600mA
- Standby .. 150mA (typical)

Operating Temperature Range .. -30°C to +60°C

1. Additional channels may be factory programmed. Contact your nearest Tait Dealer or Customer Service Organisation.

 Copyright TEL

Dimensions:

Height	..	183mm
Width	..	60mm
Length	..	320mm

Weight	..	2.1kg
Time-Out Timer (optional)	..	0 to 5 minutes[1] adjustable in 10 second steps
Tail Timer	..	0 to 5 seconds adjustable in 100ms[2] steps
Transmit Key Time	..	<30ms
Transmit Lockout Timer	..	0 to 1 minute adjustable in 10 second steps

1.2.3 RF Section

Frequency Range	..	136-174MHz (refer to Section 1.4 and Section 1.5)
Modulation Type	..	FM
Frequency Increment	..	5 or 6.25kHz
Switching Range	..	8MHz (i.e. ±4MHz from the centre frequency)
Load Impedance	..	50 ohms
Frequency Stability (see also Section 1.4 and Section 1.5)	..	±2.5ppm, -30°C to +60°C

Adjacent Channel Power (full deviation):

Wide Bandwidth (WB) (±25kHz/15kHz B/W)	..	-75dBc
Mid Bandwidth (MB) (±20kHz/12kHz B/W)	..	-70dBc
Narrow Bandwidth (NB) (±12.5kHz/7.5kHz B/W)	..	-65dBc

Transmitter Side Band Noise:
(no modulation, 15kHz bandwidth)

At ±25kHz	..	-95dBc
At ±1MHz	..	-105dBc

1. Adjustable from 0 to 10 minutes in PGM800Win version 2.12 and later.
2. Adjustable in 20ms steps in PGM800Win version 2.12 and later.

Intermodulation	..	-40dBc with interfering signal of -30dBc
	..	-70dBc with 25dB isolation & interfering signal of -30dBc (PA with output isolator)

T836 Mismatch Capability:

Ruggedness	..	refer to your nearest Tait Dealer or Customer Service Organisation
Stability	..	3:1 VSWR (all phase angles)

Radiated Spurious Emissions:

Transmit	..	-36dBm to 1GHz -30dBm to 4GHz
Standby	..	-57dBm to 1GHz -47dBm to 4GHz

Conducted Spurious Emissions: (T836 Only)

Transmit	..	-36dBm to 1GHz -30dBm to 4GHz
Standby	..	-57dBm to 1GHz -47dBm to 4GHz

Power Output:

T836 - Rated Power	..	25W
- Range Of Adjustment	..	5-25W
T837	..	800mW ±200mW

Duty Cycle (T836 Only)	..	100% @ 25W at +25°C
	..	30% @ 25W at +60°C
	..	100% @ 10W at +60°C

1.2.4 Audio Processor

1.2.4.1 Inputs

Inputs Available	..	line, microphone and CTCSS

Line Input:

Impedance	..	600 ohms (balanced)
Sensitivity (60% modulation @ 1kHz)-		
With Compressor	..	-50dBm
Without Compressor	..	-30dBm

Microphone Input:

Impedance	..	600 ohms
Sensitivity (60% modulation @ 1kHz)-		
With Compressor	..	-70dBm
Without Compressor	..	-50dBm

 Copyright TEL

1.2.4.2 Modulation Characteristics

Frequency Response (below limiting)	..	flat or pre-emphasised (optional)
Line And Microphone Inputs:		
Pre-emphasised Response-		
Bandwidth	..	300Hz to 3kHz (WB & MB)
	..	300Hz to 2.55kHz (NB)
Below Limiting	..	within +1, -3dB of a 6dB/octave pre-emphasis characteristic
Flat Response	..	within +1, -2dB of output at 1kHz
Above Limiting Response	..	within +1, -2dB of a flat response (ref. 1kHz)
Distortion	..	2%
Hum And Noise:		
Wide Bandwidth	..	-55dB (300Hz to 3kHz [EIA]) typical
Mid Bandwidth	..	-54dB (CEPT)
Narrow Bandwidth	..	-50dB (CEPT)
Compressor (optional):		
Attack Time	..	10ms
Decay Time	..	800ms
Range	..	50dB

1.2.4.3 CTCSS

Standard Tones	..	all 37 EIA group A, B and C tones plus 13 commonly used tones
Frequency Error (from EIA tones)	..	0.08% max.
Generated Tone Distortion	..	1.2% max.
Generated Tone Flatness	..	flat across 67 to 250.3Hz to within 1dB
Modulation Level	..	adjustable
Modulated Distortion	..	<5%

1.2.5 Microcontroller

Auxiliary Ports:		
Open Drain Type	..	capable of sinking 2.25mA via 2k2Ω
V_{ds} max.	..	5V

1.2.6 Test Standards

Where applicable, this equipment is tested in accordance with the following standards.

1.2.6.1 European Telecommunication Standard

ETS 300 086 January 1991

Radio equipment and systems; land mobile service; technical characteristics and test conditions for radio equipment with an internal or external RF connector intended primarily for analogue speech.

ETS 300 113 March 1996

Radio equipment and systems; land mobile service; technical characteristics and test conditions for radio equipment intended for the transmission of data (and speech) and having an antenna connector.

ETS 300 219 October 1993

Radio equipment and systems; land mobile service; technical characteristics and test conditions for radio equipment transmitting signals to initiate a specific response in the receiver.

ETS 300 279 February 1996

Radio equipment and systems; electromagnetic compatibility (EMC) standard for private land mobile radio (PMR) and ancillary equipment (speech and/or non-speech).

1.2.6.2 DTI CEPT Recommendation T/R-24-01

Annex I: 1988

Technical characteristics and test conditions for radio equipment in the land mobile service intended primarily for analogue speech.

Annex II: 1988

Technical characteristics of radio equipment in the land mobile service with regard to quality and stability of transmission.

1.2.6.3 Telecommunications Industry Association

ANSI/TIA/EIA-603-1992

Land mobile FM or PM communications equipment measurement and performance standards.

 Copyright TEL

1.3 Product Codes

The three groups of digits in the T830 Series II product code provide information about the model, type and options fitted, according to the conventions described below.

The following explanation of T830 Series II product codes is not intended to suggest that any combination of features is necessarily available in any one product. Consult your nearest Tait Dealer or Customer Service Organisation for more information regarding the availability of specific models, types and options.

Model

The Model group indicates the basic function of the product, as follows:

T83X-XX-XXXX	T835 receiver T836 25W transmitter T837 exciter T838 50W power amplifier T839 100W power amplifier

Type

The Type group uses two digits to indicate the basic RF configuration of the product.

The first digit in the Type group designates the frequency range:

T83X-**X**X-XXXX	'1' for 136-156MHz '2' for 148-174MHz

The second digit in the Type group indicates the channel spacing:

T83X-X**X**-XXXX	'0' for wide bandwidth (25kHz) '3' for mid bandwidth (20kHz) '5' for narrow bandwidth (12.5kHz)

Options

T83X-XX-**XXXX**	The Options group uses four digits and/or letters to indicate any options that may be fitted to the product. This includes standard options and special options for specific customers. '0000' indicates a standard Tait product with no options fitted. The large number of options precludes listing them here.

1.4 T836 Standard Product Range

The following table lists the range of standard T836 types (i.e. no options fitted) available at the time this manual was published. Consult your nearest Tait Dealer or Customer Service Organisation for more information.

Frequency Range (MHz)		136-156			
Deviation (kHz)		2.5	2.5	4	5
TCXO[a]	±2.5ppm -30°C to +60°C	●	●	●	●
Transmitter Type: T836-		16-0000[b]	15-0000	13-0000	10-0000

Frequency Range (MHz)		148-174			
Deviation (kHz)		2.5	2.5	4	5
TCXO[a]	±2.5ppm -30°C to +60°C	●	●	●	●
Transmitter Type: T836-		26-0000[b]	25-0000	23-0000	20-0000

a. A TCXO with a stability of ±1ppm (0°C to +60°C) is available to suit specific requirements. Contact your nearest authorised Tait Dealer or Customer Service Organisation for further details.

b. United States market only.

You can identify the transmitter type by checking the product code printed on a label on the rear of the chassis (Figure 1.1 in Part A shows typical labels). You can further verify the transmitter type by checking the placement of an SMD resistor in the table that is screen printed onto the PCB (refer to Section 6.1 for more details).

 Copyright TEL

1.5 T837 Standard Product Range

The following table lists the range of standard T837 types (i.e. no options fitted) available at the time this manual was published. Consult your nearest Tait Dealer or Customer Service Organisation for more information.

Frequency Range (MHz)		136-156			
Deviation (kHz)		2.5	2.5	4	5
TCXO[a]	±2.5ppm -30°C to +60°C	●	●	●	●
Exciter Type: T837-		16-0000[b]	15-0000	13-0000	10-0000

Frequency Range (MHz)		148-174			
Deviation (kHz)		2.5	2.5	4	5
TCXO[a]	±2.5ppm -30°C to +60°C	●	●	●	●
Exciter Type: T837-		26-0000[b]	25-0000	23-0000	20-0000

a. A TCXO with a stability of ±1ppm (0°C to +60°C) is available to suit specific requirements. Contact your nearest authorised Tait Dealer or Customer Service Organisation for further details.

b. United States market only.

You can identify the exciter type by checking the product code printed on a label on the rear of the chassis (Figure 1.1 in Part A shows typical labels). You can further verify the exciter type by checking the placement of an SMD resistor in the table that is screen printed onto the PCB (refer to Section 6.1 for more details).

Copyright TEL

2 T836/837 Circuit Operation

This section provides a basic description of the circuit operation of the T836 transmitter and T837 exciter.

Note: Unless otherwise specified, the term "PGM800Win" used in this and following sections refers to version 2.00 and later of the software.

Refer to Section 6 where the parts lists, grid reference index and diagrams will provide detailed information on identifying and locating components and test points on the main PCB. The parts list and diagrams for the VCO PCB are in Part E.

The following topics are covered in this section.

Section	Title	Page
2.1	**Introduction**	**2.3**
2.2	**Microcontroller**	**2.4**
2.3	**Synthesised Local Oscillator**	**2.5**
2.3.1	Two Point Modulation	2.6
2.4	**VCO**	**2.7**
2.4.1	VCO Supply	2.7
2.5	**Audio Processor**	**2.8**
2.5.1	General	2.8
2.5.2	Audio Inputs	2.8
2.5.3	Keying Inputs	2.9
2.5.4	Compressor (Automatic Level Control (ALC))	2.9
2.5.5	Outputs To Modulators	2.9
2.6	**Power Supply & Regulator Circuits**	**2.10**
2.7	**Transmit Timers**	**2.11**
2.8	**T836 Drive Amplifier & PA**	**2.12**
2.9	**T837 Exciter Drive Amplifier**	**2.13**

Figure	Title	Page
2.1	T836 High Level Block Diagram	2.3
2.2	T837 High Level Block Diagram	2.3
2.3	T836/837 Microcontroller Block Diagram	2.4
2.4	T836/837 Synthesiser Block Diagram	2.5
2.5	T836/837 Two Point Modulation	2.6
2.6	T836/837 Audio Processor Block Diagram	2.8
2.7	T836/837 Power Supply & Regulators Block Diagram	2.10
2.8	T836/837 Transmit Timers	2.11

 Copyright TEL

2.1 Introduction

The individual circuit blocks which make up the T836 and T837 are:

- synthesiser
- VCO
- audio processor
- drive amplifier
- power amplifier (T836 only)
- voltage regulators.

Each of these circuit blocks is set in its own shielded compartment, formed as an integral part of the main chassis.

The configuration of the circuit blocks may be seen on a functional level in Figure 2.1 and Figure 2.2. Refer to the circuit diagrams in Section 6.2 (T836) or 6.3 (T837) for more detail.

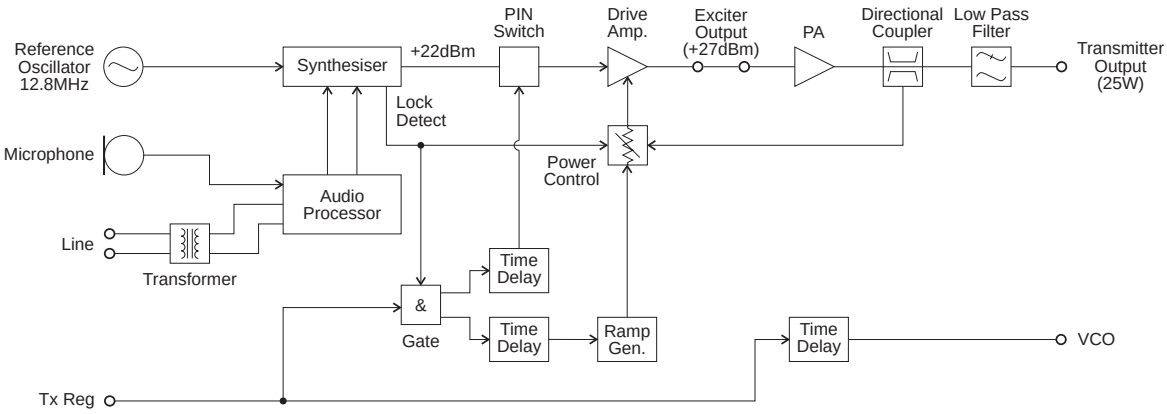

Figure 2.1 T836 High Level Block Diagram

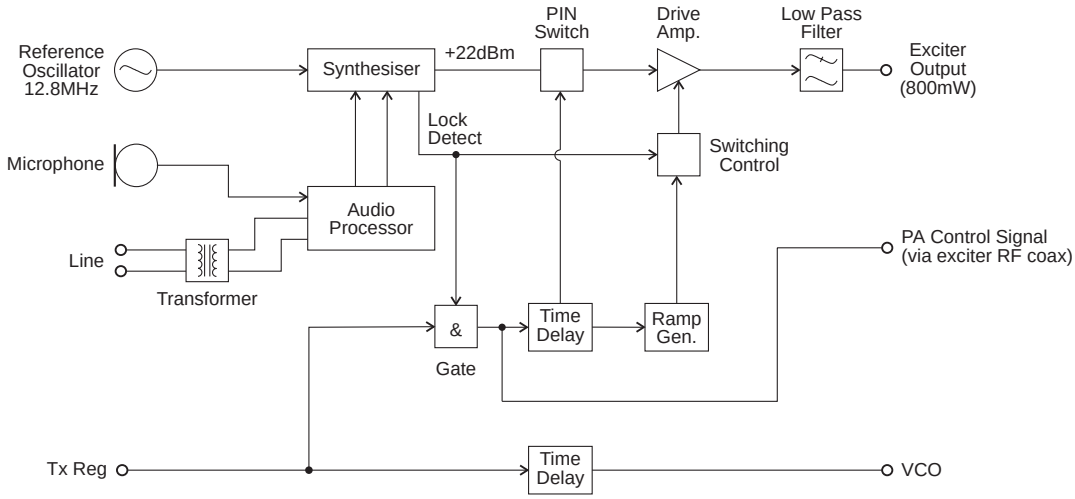

Figure 2.2 T837 High Level Block Diagram

2.2 Microcontroller

(Refer to the microcontroller circuit diagram (sheet 8) in Section 6.2 or 6.3.)

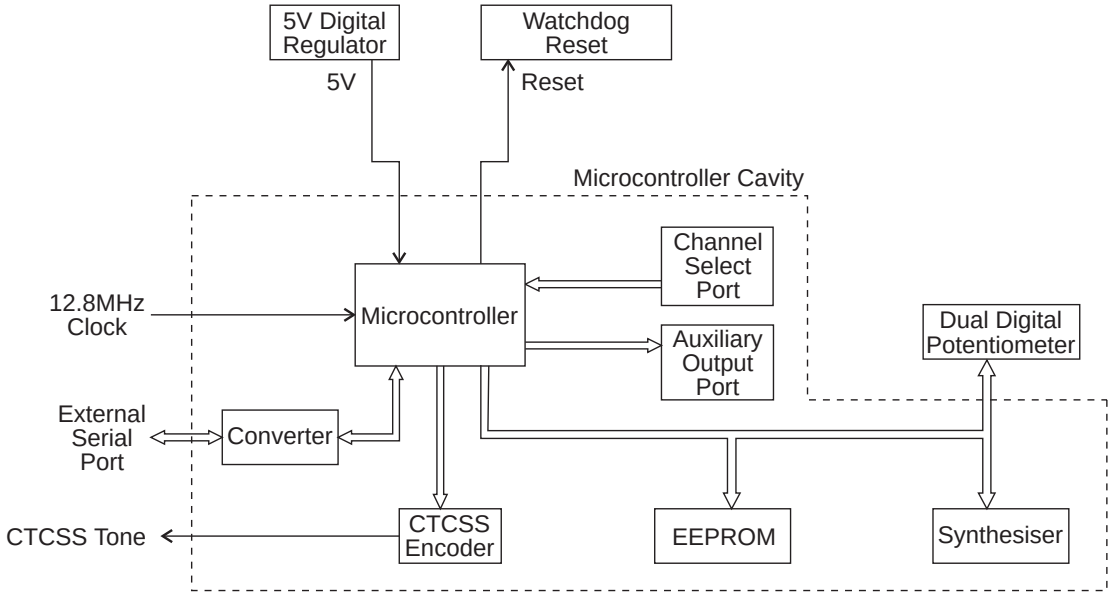

Figure 2.3 T836/837 Microcontroller Block Diagram

Overall system control of the T836/837 is accomplished by the use of a member of the 80C51 family of microcontrollers (IC810). It runs from internal ROM and RAM, thus leaving all four ports free for input/output functions.

Non-volatile data storage is achieved by serial communication with a 16kBit EEPROM (IC820). This serial bus is also used by the microcontroller to program the synthesiser (IC740) and deviation control EPOTS (IC220).

The main tasks of the microcontroller are as follows:

- program the synthesiser and EPOT;
- interface with the PGM800Win programming software at 9600 baud via the serial communication lines on D-range 1 (PL100) & D-range 2;
- monitor channel change inputs from D-range 2;
- generate timing waveforms for CTCSS encoding;
- coordinate and implement timing control of the exciter/transmitter;
- control the front panel "Supply" LED (refer to Section 5.3).

 Copyright TEL

2.3 Synthesised Local Oscillator

(Refer to the synthesiser circuit diagram (sheet 7) in Section 6.2 or 6.3 and the VCO circuit diagram in Part E.)

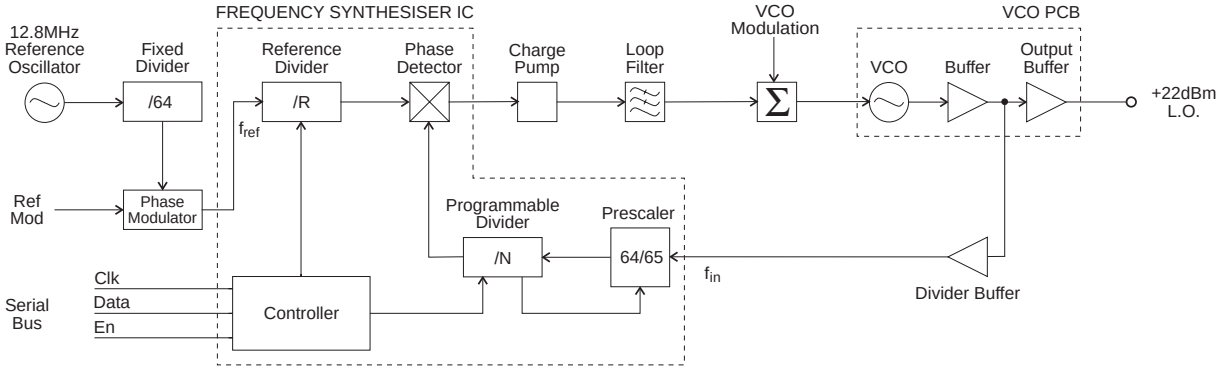

Figure 2.4 T836/837 Synthesiser Block Diagram

The synthesiser (IC740) employs a phase-locked loop (PLL) to lock a voltage controlled oscillator (VCO) to a given reference frequency. The synthesiser receives the divider information from the control microprocessor via a 3 wire serial bus (clock, data, enable). When the data has been latched in, the synthesiser processes the incoming signals from the VCO buffer (f_{in}) and the phase modulator (f_{ref}).

A reference oscillator at 12.8MHz (IC700) is buffered (IC710 pins 3 & 4) and divided down to 200kHz (IC730). This 200kHz square wave is then summed with the modulating audio and passed to an integrator (IC720 pins 9 & 8, Q710, Q720). This produces a ramping waveform which is centred around a DC level determined by the incoming audio. IC720 pins 5 & 6 perform as a comparator, ultimately producing a phase-modulated 200kHz square wave. This is followed by another phase shifting stage (IC720 pins 3 & 4, Q730, Q740), before being divided down to 6.25kHz or 5kHz within the synthesiser IC (IC740).

A buffered output of the VCO (Q795) is divided with a prescaler and programmable divider which is incorporated into the synthesiser chip (IC740). This signal is compared with the phase modulated reference signal at the phase detector (also part of the synthesiser chip). The phase detector outputs drive a balanced charge pump circuit (Q760, Q770, Q775, Q780, Q785) and active loop filter (IC750 pins 5, 6 & 7) which produces a DC voltage between 0V and 20V to tune the VCO. This VCO control line is further filtered to attenuate noise and other spurious signals. Note that the VCO frequency increases with increasing control voltage.

If the synthesiser loop loses lock, a pulsed signal appears at LD (pin 2) of IC740. This signal is filtered and buffered by IC750 pins 1, 2 & 3, producing the Lock-Detect signal used to shut off the power supply to the drive amplifier. IC750 pin 1 is at 20V when the synthesiser is out of lock.

2.3.1 Two Point Modulation

Frequency modulation occurs by modulating both the VCO input and the synthesiser reference input. This process is called two point modulation and ensures a flat modulation response from 67Hz to 3kHz (2.55kHz for narrow bandwidth).

The PLL has a fast response time, allowing a Tx key-up time of <30ms. Because of this fast response time the PLL sees lower modulation frequencies superimposed on the VCO as an error and corrects for it, resulting in no modulation on the carrier. At modulation frequencies greater than 300Hz the loop cannot correct fast enough and modulation is seen on the carrier. The response of the loop to VCO modulation is shown by f_2 in Figure 2.5 below.

To achieve low frequency modulation, the reference oscillator is also modulated so that the phase detector of IC740 detects no frequency error under modulation. Thus, the synthesiser loop will not attempt to correct for modulation and the audio frequency response of the transmitter remains unaffected. The response of the loop to reference frequency modulation is shown by f_1 in Figure 2.5.

The reference modulation is controlled by a 256-step 10k electronic potentiometer (EPOT) which is adjustable via PGM800Win. The EPOT is made up of 256 resistive sections (representing approximately 39Ω each) which can be individually addressed by the microcontroller. Each section can be switched in or out of circuit to achieve the required total resistance, thus giving control of the reference modulation.

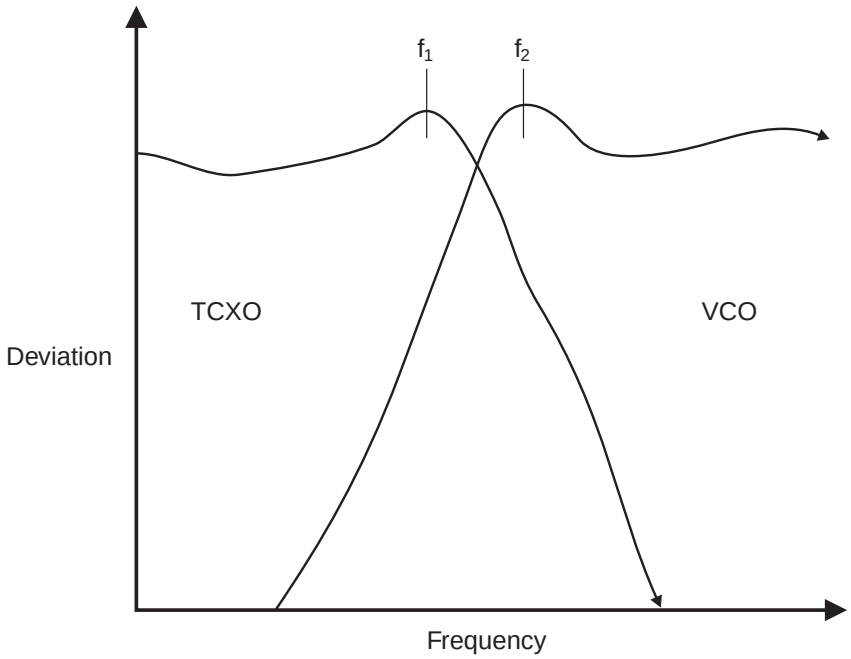

Figure 2.5 T836/837 Two Point Modulation

 Copyright TEL

2.4 VCO

(Refer to the VCO circuit diagram in Part E.)

The VCO transistor (Q1) operates in a common source configuration, with an LC tank circuit coupled between its gate and drain to provide the feedback necessary for oscillation. The VCO control voltage from the loop filter (IC750 pin 7) is applied to the varicaps (D1-D4) to facilitate tuning within an 8MHz band of frequencies. A trimcap (CV1) is used for coarse tuning of the VCO. The output from the oscillator circuit drives a cascode amplifier stage (Q2, Q3) which supplies +10dBm (typically) to a further stage of amplification, Q5. This is the final amplifier on the VCO PCB, and delivers +22dBm (typically) to the exciter drive amplifier.

A low level "sniff" is taken from the output of Q3 and used to drive the divider buffer (Q795) for the synthesiser (IC740).

The VCO operates at the actual output frequency of the exciter, i.e. there are no multiplier stages. The VCO is modulated by superimposing the audio signal onto the control voltage and by phase modulating the reference signal.

2.4.1 VCO Supply

The VCO is supplied from two switched +9V supplies under the control of the Tx-Reg. supply.

The VCO (Q1) and buffer amplifier (Q2 & Q3) are supplied from one +9V switched supply by Q540 via the capacitor multiplier (Q550, C550).

The output amplifier is supplied from the other +9V supply by Q520, Q530, and Q510.

A delay circuit holds the VCO on for a short time after the Tx-Reg. supply has been switched off. This is to allow the RF power circuits (both exciter and PA) to ramp down in the correct manner before the VCO is switched off.

2.5 Audio Processor

(Refer to the audio processor circuit diagram (sheet 2) in Section 6.2 or 6.3.)

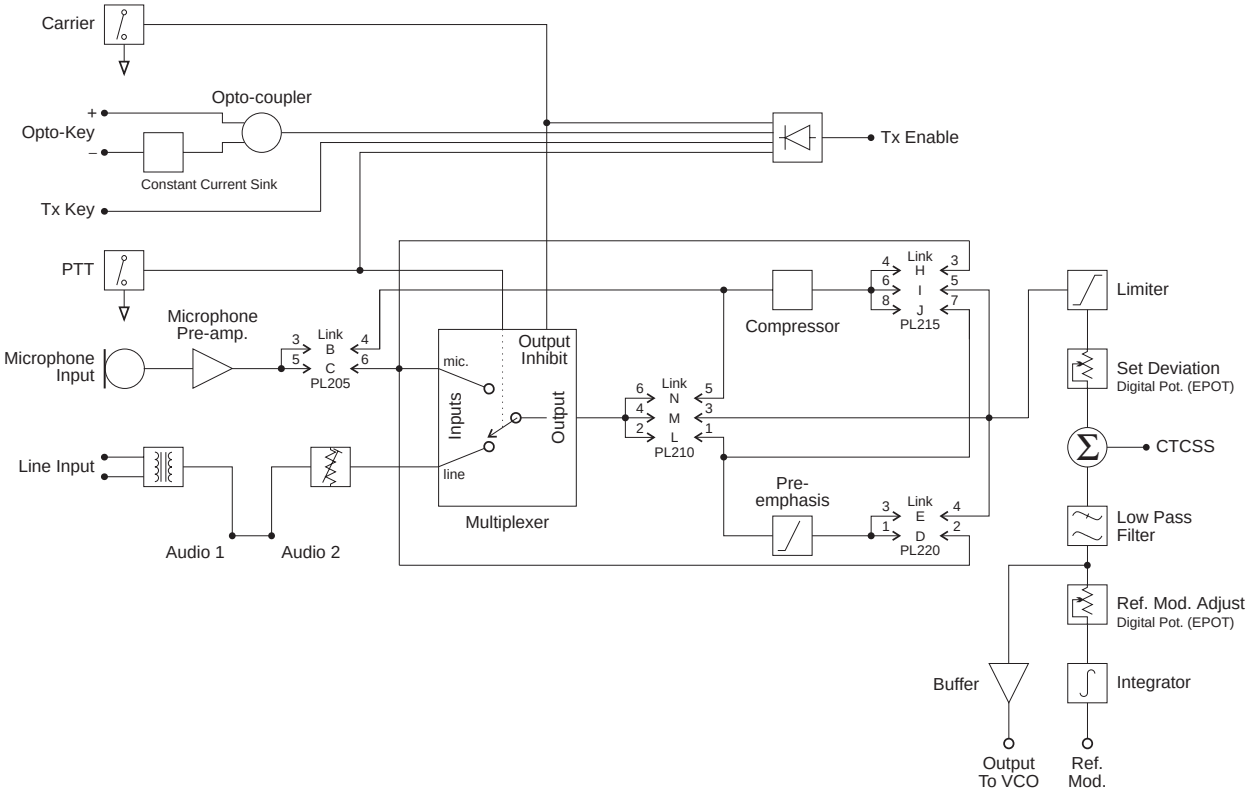

Figure 2.6 T836/837 Audio Processor Block Diagram

2.5.1 General

The audio processor comprises several link selectable circuit blocks which may be configured in a variety of combinations to suit individual requirements. The pre-emphasis network and compressor may be linked individually or cascaded between either or both audio inputs and the limiter.

Refer to Section 3.5.1 for linking details.

2.5.2 Audio Inputs

Two audio inputs are available: one from a 600 ohm balanced (or unbalanced) line, and the other from a local microphone. The microphone signal is passed first to a pre-amplifier (Q210) and ultimately to a multiplexer (IC240), but in between may pass through the compressor (depending on the linking details). The line transformer is also connected to the multiplexer and is disabled by the microphone PTT switch.

A third input for external CTCSS tones is also provided.

 Copyright TEL

2.5.3 Keying Inputs

There are four ways to key the exciter:

- pulling the Tx-Key line low (pin 13 on D-range 1 [PL100]) at the rear of the set);
- pushing the "Carrier" button on the front panel - this will inhibit all audio;
- using the PTT button on the local microphone, disabling audio from the line;
- via the opto-key inputs (pins 11 and 12 on D-range 1 [PL100]) when electrical isolation is required. This features a constant current sink (Q270) to ensure reliable activation of the opto-coupler (IC250) at low keying voltages.

2.5.4 Compressor (Automatic Level Control (ALC))

The input signal is fed via a current controlled attenuator (Q230, Q220) to a high gain stage (IC230) from which the output signal is taken. This signal is passed to a comparator (IC230) which toggles whenever the audio signal exceeds a DC threshold determined by RV220. Thus, the comparator produces a square wave whose mark-space ratio is determined by the amplitude of the audio signal. This square wave pumps up the reservoir capacitor (C233) which controls the attenuator (Q230, Q220), thus completing the feedback loop.

The compression level is set by adjustment of the comparator threshold (RV220).

Note: Although the high dynamic range of the compressor allows the use of very low audio signal levels, such conditions will be accompanied by a degradation of the signal-to-noise ratio. Very low audio input levels should therefore be avoided where possible.

2.5.5 Outputs To Modulators

The output signal from the limiter (IC210, IC230) is added with a CTCSS tone at a summing amplifier (IC260). The signal is then low pass filtered (IC260) and split to supply the two modulators.

Since the VCO modulator is a true frequency modulator, its audio is simply buffered (IC260). The reference modulator, however, is a phase modulator and its audio must first be integrated (IC210).

It is vital that the audio levels to the modulators are accurately set, ***relative to each other***. Hence the inclusion of level adjustment in the reference modulator path. Once set, adjustments to absolute deviation may be made only by IC220, a 256-step 10k electronic potentiometer (EPOT), which is controlled via PGM800Win. The EPOT is made up of 256 resistive sections (representing approximately 39Ω each) which can be individually addressed by the microcontroller. Each section can be switched in or out of circuit to achieve the required total resistance, thus adjusting the absolute deviation level.

2.6 Power Supply & Regulator Circuits

(Refer to the regulators circuit diagram (sheet 6) in Section 6.2 or 6.3.)

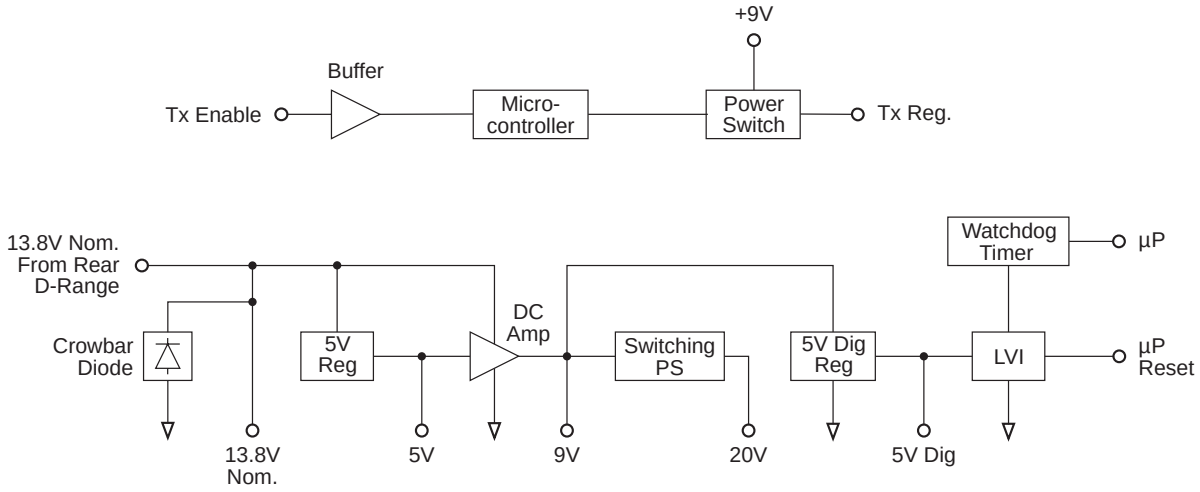

Figure 2.7 T836/837 Power Supply & Regulators Block Diagram

The T836 and T837 are designed to operate from a 10.8-16V DC supply (13.8V nominal). A 5.3V regulator (IC630) runs directly from the 13.8V rail, driving much of the synthesiser circuitry. It is also used as the reference for a DC amplifier (IC640, Q630, Q620) which provides a medium current capability 9V supply.

A switching power supply (Q660, Q670) runs from the 9V supply and provides a low current capability +20V supply. This is used to drive the synthesiser loop filter (IC750), giving a VCO control voltage range of up to 20V, and the Lock-Detect amplifiers.

Ultimate control of the transmitter is via the Tx-Reg. supply, switched from 9V by Q610. This is enabled via the Tx-Enable signal from the audio processor, and microprocessor.

A crowbar diode is fitted for protection against connection to a power supply of incorrect polarity. It also provides transient overvoltage protection.

Note: A fuse must be fitted in the power supply line for the diode to provide effective protection.

 Copyright TEL

2.7 Transmit Timers

The transmit tail timer, transmit timeout timer and transmit lockout timer can all be set from PGM800Win. The fields for setting these are found on the system information page. These three timers operate as follows (refer also to Figure 2.8):

Timer	Function	Adjustment
Transmit Tail	Sets the tail time during which the transmitter stays keyed after the external key source has been removed.	0-5 seconds in 100ms steps[a]
Transmit Timeout	Sets the maximum continuous transmission time. Once the timer has timed out, the transmitter must be keyed again, unless prevented by the transmit lockout timer.	0-300 seconds[b] in 10 second steps
Transmit Lockout	Sets the period of time that must elapse after a timeout before the transmitter can re-transmit. Once the timer has timed out, the transmitter can be keyed again.	0-60 seconds in 10 second steps

a. Adjustable in 20ms steps in PGM800Win version 2.12 and later.
b. Adjustable from 0 to 600 seconds in PGM800Win version 2.12 and later.

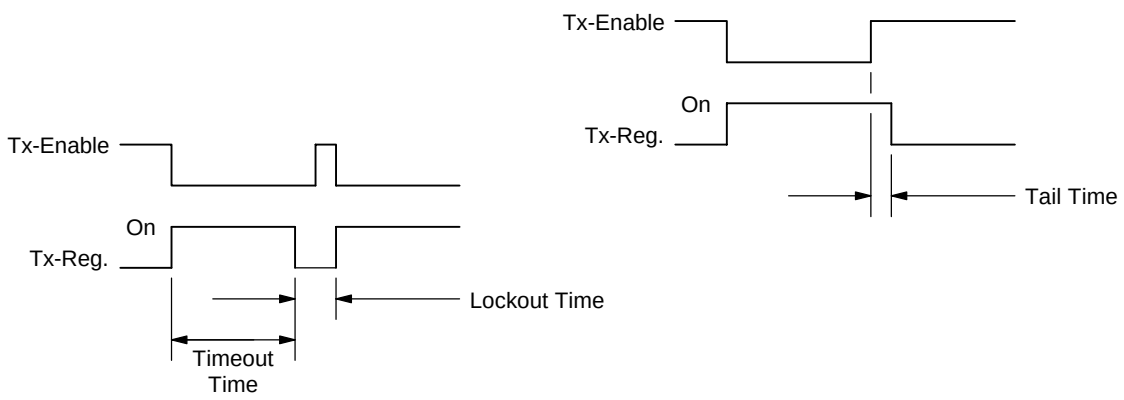

Figure 2.8 T836/837 Transmit Timers

2.8 T836 Drive Amplifier & PA

(Refer to Figure 2.1 and the exciter and PA circuit diagrams (sheets 3 & 4) in Section 6.2.)

The output power of the PA is maintained at a constant level via a power control loop applied to the two-stage, wide band exciter amplifier (Q365, Q370). The forward and reverse RF power levels are sensed via a dual directional coupler and detector diodes (D410, D420 in the PA cavity). The detected DC signals are summed with the 'power adjust' level and fed to the control integrator (IC330 pins 1, 2 & 3). The output control voltage is buffered by Q310 and Q315, and applied to the collectors of the wide band exciter amplifier.

Note: Forward and reflected power signals are summed so that, under high VSWR, the power control will turn the output RF level down.

To reduce the spurious output level when the synthesiser is out-of-lock, the Tx-Reg. and Lock-Detect signals are gated to inhibit the PA control circuit and to switch off the RF signal at the input to the drive amplifier. This is achieved by a PIN switch attenuator (D340, D350, D360).

Cyclic keying control is provided by additional circuitry consisting of several time delay, ramp and gate stages:

- Q350, Q355, Q360, IC330 pins 1, 2 & 3 — power ramping
- Q340, Q345 — Tx-Reg. and $\overline{\text{Lock-Detect}}$ gate
- Q320, Q325, Q330, Q335 — delay and PIN switch drive.

This is to allow the RF power circuits (both exciter and PA) to ramp up and down in a controlled manner so that minimal adjacent channel interference is generated during the transition.

The output of the wide band amplifier is approximately 500mW (+27dBm) for an input of 170mW (+22dBm) when the power control is set to maximum.

The zener diode (D330) limits the upper range of the controlled voltage to the exciter transistors.

A temperature sensor (R460) is provided so that the RF output power can be reduced to a preset level when a set temperature is exceeded. This is a protection circuit (IC330 pins 5, 6 & 7, Q305) to prevent overheating, as the unit is ***not*** rated for continuous operation at high temperatures (refer to Section 1.2.3 for duty cycle specifications). RV330 sets the PA output power while under high temperature fold-back conditions.

R359, R360 and R362 form a 6dB attenuator to provide good VCO/exciter isolation.

The output attenuator (R392, R390, R394 and R396) aids in reducing exciter/PA interaction while also ensuring a reasonable match for Q350.

The RF output from the exciter is fed to the driver stage (Q415) and then to the final (Q425). DC is fed to the final via a low pass filter with special low frequency decoupling. CV451 tunes the output matching across the entire band.

 Copyright TEL

2.9 T837 Exciter Drive Amplifier

(Refer to Figure 2.2 and the exciter circuit diagram (sheet 3) in Section 6.3.)

A two-stage, wide band amplifier (Q365, Q370) provides an output level of approximately 800mW (+29dBm) for an input of 170mW (+22dBm) from the VCO. IC330 pins 5, 6 & 7, Q310, and Q315 provide a 10.5V regulated supply for the exciter.

To reduce the spurious output level when the synthesiser is out-of-lock, the Tx-Reg. and Lock-Detect signals are gated to inhibit the exciter control circuit and to switch off the RF signal at the input to the drive amplifier. This is achieved by a PIN switch attenuator (D340, D350, D360).

Cyclic keying control is provided by additional circuitry consisting of several time delay, ramp and gate stages:

- Q305, IC330 pins 5, 6 & 7 — power ramping
- Q340, Q345 — Tx-Reg. and $\overline{\text{Lock-Detect}}$ gate
- Q320, Q325, Q330, Q335 — delay and PIN switch drive.

This is to allow the RF power circuits (both exciter and PA) to ramp up and down in a controlled manner so that minimal adjacent channel interference is generated during the transition.

R359, R360 and R362 form a 6dB attenuator to provide good VCO/drive amplifier isolation.

The output attenuator (R392, R390, R394, R396) assists in reducing exciter/PA interaction while also ensuring a good match for Q370.

Note: The exciter provides a DC control signal to the PA via the RF coax. This is injected via L390.

Copyright TEL

3 T836/837 Initial Tuning & Adjustment

Caution: **This equipment contains CMOS devices which are susceptible to damage from static charges. Refer to Section 1.2 in Part A for more information on anti-static procedures when handling these devices.**

The following section describes both short and full tuning and adjustment procedures and provides information on:

- channel programming
- selecting required audio links
- synthesiser alignment
- PA alignment (T836 only)
- modulator adjustment
- limiter adjustment
- setting line level
- compressor adjustment
- timer adjustment.

Note: Unless otherwise specified, the term "PGM800Win" used in this and following sections refers to version 2.00 and later of the software.

Refer to Figure 4.4 and Figure 4.5 which show the location of the main tuning and adjustment controls. Refer also to Section 6 where the parts lists, grid reference index and diagrams will provide detailed information on identifying and locating components and test points on the main PCB. The parts list and diagrams for the VCO PCB are in Part E.

Section	Title	Page
3.1	**Introduction**	**3.3**
3.2	**Channel Programming**	**3.3**
3.3	**Test Equipment Required**	**3.4**
3.4	**Short Tuning Procedure**	**3.5**
3.4.1	Introduction	3.5
3.4.2	Synthesiser Alignment	3.5
3.4.3	Output Power Adjustment (T836 Only)	3.5
3.4.4	Two Point Modulation Adjustment	3.6
3.4.5	CTCSS Encoder (If Used)	3.7
3.4.6	FM Deviation (Limiter) Adjustment	3.7
3.4.7	Line-in Level Adjustment	3.7

Section	Title	Page
3.5	**Audio Processor Links**	**3.8**
3.5.1	Link Details	3.8
3.5.2	Typical Options	3.8
3.6	**Synthesiser Alignment**	**3.9**
3.7	**PA Alignment (T836 Only)**	**3.10**
3.8	**Thermal Shutdown (T836 Only)**	**3.10**
3.9	**Audio Processor**	**3.11**
3.9.1	Two Point Modulation	3.11
3.9.2	Modulator Adjustment	3.11
3.9.3	CTCSS Encoder (If Used)	3.12
3.9.4	Limiter Adjustment	3.12
3.9.5	Line Level Without Compressor	3.12
3.9.6	Compressor	3.13
3.9.6.1	Compressor On Line Input Only	3.13
3.9.6.2	Compressor On Microphone Input Only	3.13
3.9.6.3	Compressor On Both Line & Microphone Inputs	3.14

Figure	Title	Page
3.1	T836/837 Test Equipment Set-up With T800-01-0010	3.4
3.2	T836/837 Test Equipment Set-up Without T800-01-0010	3.4

 Copyright TEL

3.1 Introduction

When you receive your T836 transmitter or T837 exciter it will be run up and working on a particular frequency (the "default channel")[1]. If you want to switch to a frequency that is within the 8MHz switching range (i.e. ±4MHz from the factory programmed frequency), you should only need to reprogram the transmitter/exciter with the PGM800Win software (refer to the PGM800Win programming kit and Section 3.2 below).

However, if you want to switch to a frequency outside the 8MHz switching range, you will have to reprogram and re-tune the transmitter/exciter to ensure correct operation. In this case you should carry out the short tuning procedure described in Section 3.4.

If you have carried out repairs or other major adjustments, you must carry out the full tuning and adjustment procedure described in this section (except for Section 3.4).

3.2 Channel Programming

You can program up to 128 channel frequencies into the transmitter/exciter's EEPROM memory (IC820) by using the PGM800Win software package and an IBM™ PC. You can also use PGM800Win to select the transmitter/exciter's current operating frequency (or "default channel").

If the transmitter/exciter is installed in a rack frame, you can program it via the programming port in the speaker panel. However, you can also program the transmitter/exciter before it is installed in a rack frame as follows:

- by using a T800-01-0010 calibration test unit;
- via D-range 1;
- via D-range 2 (standard T800-03-0000 auxiliary D-range only);
- via SK805 (internal Micromatch connector).

If you do not use the T800-01-0010, you will have to connect the PC to the transmitter/exciter via a module programming interface (such as the T800-01-0004).

For a full description of the channel programming procedure, refer to the PGM800Win programming software user's manual.

Note: When an auxiliary D-range kit (D-range 2 - T800-03-0000) is fitted, you can also select a channel with an external switch, such as the DIP switch on the rack frame backplane PCB. Refer to Part C in the T800 Series Ancillary Equipment Service Manual (M800-00-101 or later issue) or consult your nearest Tait Dealer or Customer Service Organisation for further details.

1. Use the "Read Module" function in PGM800Win to find out what the default channel is.

3.3 Test Equipment Required

You will need the following test equipment:

- computer with PGM800Win installed
- T800 programming kit
- module programming interface (e.g. T800-01-0004 - optional)
- 13.8V power supply
- digital multimeter
- audio signal generator
- RF power meter
- audio voltmeter x 2
- modulation meter
- oscilloscope (digital preferred)
- 20dB or 40dB pad

  } or RF test set (optional)
- T800-01-0010 calibration test unit (optional)

Figure 3.1 and Figure 3.2 show typical test equipment set-ups.

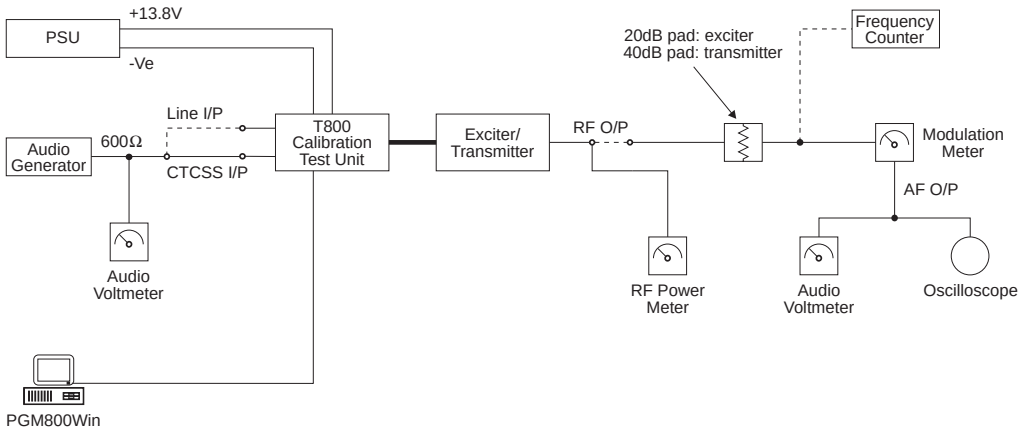

Figure 3.1 T836/837 Test Equipment Set-up With T800-01-0010

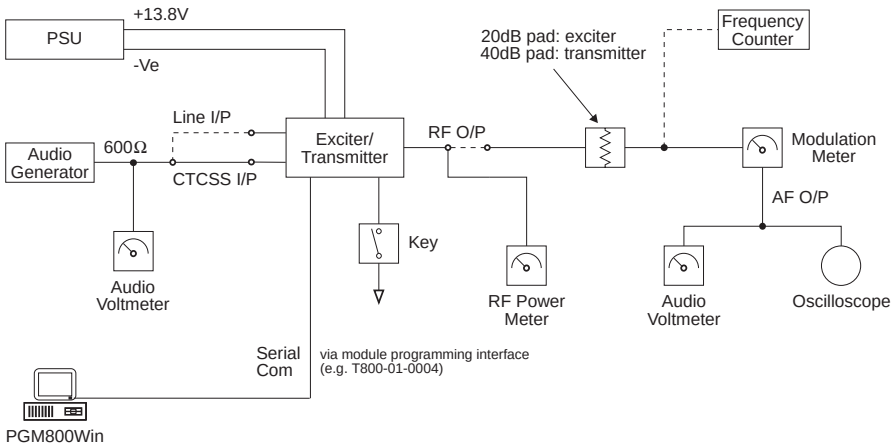

Figure 3.2 T836/837 Test Equipment Set-up Without T800-01-0010

 Copyright TEL

3.4 Short Tuning Procedure

Use this procedure only if you want to reprogram the T836/837 to a frequency outside the 8MHz switching range and do not intend to carry out any other major adjustments or repairs.

3.4.1 Introduction

Reprogram the operating frequency as described in the PGM800Win programming kit (refer to Section 3.2).

Remove the top cover (nearest the handle).

Set up the test equipment as described in Section 3.3.

Set the links in the audio processor section as required (refer to Section 3.5).

3.4.2 Synthesiser Alignment

- Connect a high impedance voltmeter to PL4-1 or the junction of L1 & R1 in the VCO (this measures the synthesiser loop voltage).
- Key the transmitter by earthing the Tx-Key line.
- **Single Channel** Tune VCO trimmer CV1 for a synthesiser loop voltage of 9V.

  Multichannel Tune VCO trimmer CV1 for a synthesiser loop voltage of 9V on the middle channel.

  If there is no middle channel, tune CV1 so that the channels are symmetrically placed around a loop voltage of 9V.

  All channels should lie within the upper and lower limits of 13V and 5V respectively.

  Do not attempt to program channels with a greater frequency separation than the specified switching range of 8MHz.

3.4.3 Output Power Adjustment (T836 Only)

Connect an RF power meter to the output socket and key the transmitter.

Turn RV320 (power adjust) fully clockwise.

Tune CV451 (output power trim) for maximum output power and check that this is >30W.

Adjust RV320 for the required output power (between 5 and 25W).

Readjust CV451 to reduce the supply current by up to 0.5A.

3.4.4 Two Point Modulation Adjustment

Note 1: In this and following sections deviation settings are given first for wide bandwidth sets, followed by settings in brackets for mid bandwidth sets ( ) and narrow bandwidth sets [ ].

Note 2: The reference modulation and limiter adjustments are controlled by 256-step electronic potentiometers (EPOTs), which are adjusted via the "Reference Modulation" and "Deviation" settings in PGM800Win. This allows the two point modulation and deviation settings to be adjusted for each channel.

Note 3: To optimise the modulation response across the switching range, repeat steps 1-4 below for each channel that will be used (usually needed only for data applications). In applications where the modulation response is less critical (e.g. voice use only), carry out steps 1-4 below on the middle channel and use the "EPOT Fill" option[1] in PGM800Win to copy the value to the other channels.

1. Inject an audio signal of 600Hz 1.5V rms (+5dBm) into the CTCSS input (D-range 1 (PL100) pin 8).

   Key the transmitter by earthing the Tx-Key line.

2. Adjust the output from the audio generator to obtain ±3kHz (±2.4kHz) [±1.5kHz] deviation at 600Hz.

3. Change the input frequency to 120Hz and, using PGM800Win, adjust the value of the "Reference Modulation" EPOT setting for the current channel to obtain ±3kHz (±2.4kHz) [±1.5kHz] deviation (you can use either the mouse or up and down arrow keys).

4. Change the input frequency back to 600Hz.

   Repeat steps 2 and 3 above until the deviations achieved at the two input frequencies are within 0.2dB of each other. You will need to do this at least four times.

5. Sweep the audio between 50 and 300Hz for peaks.

Note: A peak between 50 and 300Hz will indicate a fault condition, i.e:

- incorrect set-up

or - modulation circuitry fault.

The specification window is ±1dB relative to 150Hz from 65 to 260Hz.

1. Use the "EDIT FILL" button on the tool bar or go to "Edit", "Fill", "Epot Settings" on the menu bar.

 Copyright TEL

3.4.5 CTCSS Encoder (If Used)

Program a CTCSS tone on the default channel using PGM800Win.

If you are using an RF test set, turn off the 300Hz high pass filter.

Key the T836/837 with the front panel "Carrier" switch.

Adjust RV805 (CTCSS level adjust) to give ±500Hz (±350Hz) [±250Hz] deviation.

Set the maximum deviation as per Section 3.4.6.

3.4.6 FM Deviation (Limiter) Adjustment

Note: If the T836/837 will be used over the whole 8MHz switching range, you must set the deviation for each channel. However, if the module will be used on frequencies that cover only a 1MHz (or less) switching range, you can set the deviation on the middle channel and use this value for all other channels with the “EPOT Fill” option in PGM800Win.

Inject 1kHz at -10dBm into the line input (D-range 1 (PL100) pins 1 & 4; pins 2 & 3 shorted; refer to Section 2.2 of Part F).

Adjust RV210 (line sensitivity) fully clockwise and key the transmitter by earthing the Tx-Key line. Using PGM800Win, adjust the value of the “Deviation” EPOT setting for the current channel to obtain a deviation limit of ±4.7kHz (±3.8kHz) [±2.3kHz] (you can use either the mouse or up and down arrow keys).

Sweep the audio frequency from 100Hz to 4kHz and ensure that the maximum deviation does not exceed ±4.7kHz (±3.8kHz) [±2.3kHz]. Readjust “Deviation” if necessary via PGM800Win.

3.4.7 Line-in Level Adjustment

Remove the CTCSS signal (if used).

Set the injected signal at the line input to the required line level (typically -10 to -20dBm).

Adjust RV210 (line sensitivity) to provide ±3kHz (±2.4kHz) [±1.5kHz] deviation.

Reapply the CTCSS signal (if required).

3.5 Audio Processor Links

3.5.1 Link Details

Use the following table to set up the audio processor to the configuration you require. You should set the audio processor links before carrying out any of the tuning and adjustment procedures. The factory settings are shown in brackets [ ].

Plug	Link[a]		Function
PL205	1-2	A	not connected
	[3-4]	B	microphone pre-amp. output to compressor input
	5-6	C	microphone pre-amp. output to multiplexer input
PL210	[1-2]	L	multiplexer output to pre-emphasis input
	3-4	M	multiplexer output to limiter input
	5-6	N	multiplexer output to compressor input
PL215	1-2	G	not connected
	[3-4]	H	compressor output to multiplexer input
	5-6	I	compressor output to limiter input
	7-8	J	compressor output to pre-emphasis input
	9-10	K	not connected
PL220	1-2	D	pre-emphasis output to multiplexer input
	[3-4]	E	pre-emphasis output to limiter input
	5-6	F	not connected

a. The letters in this column and in the table in Section 3.5.2 below refer to the identification letters screen printed onto the PCB beside each pair of pins.

3.5.2 Typical Options

	PL205	PL210	PL215	PL220
microphone pre-amp. compressed and pre-emphasised; line input pre-emphasised (standard set-up)	[3-4] B	[1-2] L	[3-4] H	[3-4] E
microphone pre-amp. compressed and pre-emphasised; line input unprocessed	3-4 B	3-4 M	7-8 J	1-2 D
line and microphone compressed and pre-emphasised	5-6 C	5-6 N	7-8 J	3-4 E
microphone pre-amp. compressed; line and microphone flat response	3-4 B	3-4 M	3-4 H	5-6 F

 Copyright TEL

3.6 Synthesiser Alignment

- Ensure that the T836/837 has been programmed with the required frequencies using PGM800Win software.

- **Single Channel** Select a channel using PGM800Win.

  Multichannel Select the middle channel via PGM800Win.

- Connect a high impedance voltmeter to PL4-1 or the junction of L1 and R1 in the VCO (this measures the synthesiser loop voltage).

- Key the transmitter by earthing the Tx-Key line.

  Single Channel Tune VCO trimmer CV1 for a synthesiser loop voltage of 9V.

  Multichannel Tune VCO trimmer CV1 for a synthesiser loop voltage of 9V on the middle channel.

  If there is no middle channel, tune CV1 so that the channels are symmetrically placed around a loop voltage of 9V.

  All channels should lie within the upper and lower limits of 13V and 5V respectively.

  Do not attempt to program channels with a greater frequency separation than the specified switching range (8MHz).

- Check that the exciter output power is:

T836	500mW +200, -100mW (measured at SK310 in the exciter section)
T837	800mW ±200mW (measured at the rear panel N-type connector).

- Measure the exciter output frequency and adjust the TCXO (=IC700) trimmer if required.

Caution: **This trimmer is susceptible to physical damage. Do not exert a downward force of more than 500g (1lb) when adjusting.**

3.7 PA Alignment (T836 Only)

Check that the exciter is connected to the PA with the coaxial link.

Connect an RF power meter to the PA output.

Turn RV320 (power adjust) fully clockwise.

Measure and record the voltage (VL) at L490; perform this measurement at room temperature so that the NTC (R460) is close to 25°C.

Key the transmitter by earthing the Tx-Key line.

Tune CV451 until maximum power is obtained.

Reduce the current by approximately 1A by detuning CV451 or until the power drops below 30W.

Check that the total current drawn is less than 4.5A for 25W output power.

Adjust RV320 for an output power between 5 and 25W.

3.8 Thermal Shutdown (T836 Only)

Key the transmitter by earthing the Tx-Key line and set the output power to 25W as described in Section 3.7.

Short L490 to ground.

Set RV330 (high temperature power adjust) for an output power of 5W.

Set RV310 (temperature adjust) to 0.16VL volts (measured at IC330 pin 5), where VL is the voltage measured at L490 in Section 3.7. This sets the thermal shutdown at 85°C at NTC R460.

 Copyright TEL

3.9 Audio Processor & CTCSS

3.9.1 Two Point Modulation

The T836 and T837 utilise two point modulation to obtain a wide audio bandwidth independent of the synthesiser loop filter response. This is achieved by simultaneously frequency modulating the VCO and phase modulating the synthesiser reference frequency. The relative signal levels fed to the two modulators are quite critical and cause interaction when setting up.

Both modulating signals require readjustment when the exciter is shifted in frequency greater than the switching range (i.e. ΔF>±4MHz).

Note 1: In this and following sections deviation settings are given first for wide bandwidth sets, followed by settings in brackets for mid bandwidth sets ( ) and narrow bandwidth sets [ ].

Note 2: The reference modulation and limiter adjustments are controlled by 256-step electronic potentiometers (EPOTs), which are adjusted via the "Reference Modulation" and "Deviation" settings in PGM800Win. This allows the two point modulation and deviation settings to be adjusted for each channel.

Note 3: To optimise the modulation response across the switching range, repeat steps 1-4 below for each channel that will be used (usually needed only for data applications). In applications where the modulation response is less critical (e.g. voice use only), carry out steps 1-4 below on the middle channel and use the "EPOT Fill" option[1] in PGM800Win to copy the value to the other channels.

3.9.2 Modulator Adjustment

1. Inject an audio signal of 600Hz 1.5V rms (+5dBm) into the CTCSS input (D-range 1 (PL100) pin 8).

   Key the transmitter by earthing the Tx-Key line.

2. Adjust the output from the audio generator to obtain ±3kHz (±2.4kHz) [±1.5kHz] deviation at 600Hz.

3. Change the input frequency to 120Hz and, using PGM800Win, adjust the value of the "Reference Modulation" EPOT setting for the current channel to obtain ±3kHz (±2.4kHz) [±1.5kHz] deviation (you can use either the mouse or up and down arrow keys).

4. Change the input frequency back to 600Hz.

   Repeat steps 2 and 3 above until the deviations achieved at the two input frequencies are within 0.2dB of each other. You will need to do this at least four times.

1. Use the "EDIT FILL" button on the tool bar or go to "Edit", "Fill", "Epot Settings" on the menu bar.

5. Sweep the audio between 50 and 300Hz for peaks.

Note: A peak between 50 and 300Hz will indicate a fault condition, i.e:

- incorrect set-up
or - modulation circuitry fault.

The specification window is ±1dB relative to 150Hz from 65 to 260Hz.

3.9.3 CTCSS Encoder (If Used)

Program a CTCSS tone on the default channel using PGM800Win.

If you are using an RF test set, turn off the 300Hz high pass filter.

Key the T836/837 with the front panel "Carrier" switch.

Adjust RV805 (CTCSS level adjust) to give ±500Hz (±350Hz) [±250Hz] deviation.

Set the maximum deviation as per Section 3.9.4.

3.9.4 Limiter Adjustment

Note: If the T836/837 will be used over the whole 8MHz switching range, you must set the deviation for each channel. However, if the module will be used on frequencies that cover only a 1MHz (or less) switching range, you can set the deviation on the middle channel and use this value for all other channels with the “EPOT Fill” option in PGM800Win.

Set the links in the audio processor section as required (refer to Section 3.5).

Inject 1kHz at -10dBm into the line input (D-range 1 (PL100) pins 1 & 4; and pins 2 & 3 shorted; refer to Section 2.2 of Part F).

Adjust RV210 (line sensitivity) fully clockwise and key the transmitter by earthing the Tx-Key line. Using PGM800Win, adjust the value of the “Deviation” EPOT setting for the current channel to obtain a deviation limit of ±4.7kHz (±3.8kHz) [±2.3kHz] (you can use either the mouse or up and down arrow keys).

Sweep the audio frequency from 100Hz to 4kHz and ensure that the maximum deviation does not exceed ±4.7kHz (±3.8kHz) [±2.3kHz]. Readjust “Deviation” if necessary via PGM800Win.

3.9.5 Line Level Without Compressor

This section assumes that the compressor is not used. If the compressor is required, refer to Section 3.9.6.

Remove the CTCSS signal (if used).

 Copyright TEL

Adjust the line sensitivity as follows:

- set the injected signal at the line input to the required line level (typically -10 to -20dBm);
- adjust RV210 (line sensitivity) to provide ±3kHz (±2.4kHz) [±1.5kHz] deviation.

Reapply the CTCSS signal (if required).

3.9.6 Compressor

The compressor may be used on the line input only, the microphone input only, or on both the line and microphone inputs. If the compressor is used, refer to one of the following sections as appropriate.

3.9.6.1 Compressor On Line Input Only

Set RV210 (line sensitivity) fully clockwise and key the transmitter by earthing the Tx-Key line.

Reduce the line level to -50dBm at 1kHz and set RV220 (compression level) fully clockwise.

Check that ±3kHz (±2.4kHz) [±1.5kHz] deviation is still available.

Slowly increase the audio input level until the demodulated waveform shows significant signs of clipping (approximately ±4.5kHz (±3.6kHz) [±2.3kHz] deviation).

Adjust RV220 anticlockwise until the demodulated waveform is just clipping (approximately ±4kHz (±3.2kHz) [±2kHz] deviation).

Increase the input level to -10dBm and check that the test tone is still held just into clipping. The input line level should be typically -10 to -20dBm.

3.9.6.2 Compressor On Microphone Input Only

Key the transmitter by earthing the Tx-Key line and plug a microphone jack into the front panel socket.

Adjust RV220 (compression level) fully clockwise.

Acoustically couple the microphone to a tone box (1kHz) and close the PTT switch.

Increase the audio level until the demodulated waveform shows significant signs of clipping (approximately ±4.5kHz (±3.6kHz) [±2.3kHz] deviation).

Adjust RV220 anticlockwise until the demodulated waveform is just clipping (approximately ±4kHz (±3.2kHz) [±2kHz] deviation).

Increase the audio level by 10dB and verify that the test tone is held just into clipping.

Whistle steadily into the microphone, checking that approximately ±4kHz (±3.2kHz) [±2kHz] deviation is produced. The modulated waveform should be basically sinusoidal.

Speak into the microphone, checking that the modulation peaks reach about ±5kHz (±4kHz) [±2.5kHz] deviation.

As the line is to be used without compression, set RV210 (line sensitivity) as described in Section 3.9.5.

3.9.6.3 Compressor On Both Line & Microphone Inputs

Set up as described in Section 3.9.6.1.

 Copyright TEL

4 T836/837 Functional Testing

Caution: **This equipment contains CMOS devices which are susceptible to damage from static charges. Refer to Section 1.2 in Part A for more information on anti-static procedures when handling these devices.**

The following test procedures will confirm that the T836/837 has been tuned and adjusted correctly and is fully operational.

Note 1: In this and following sections deviation settings are given first for wide bandwidth sets, followed by settings in brackets for mid bandwidth sets ( ) and narrow bandwidth sets [ ].

Note 2: Unless otherwise specified, the term "PGM800Win" used in this and following sections refers to version 2.00 and later of the software.

Refer to Figure 4.4 and Figure 4.5 for the location of the main tuning and adjustment controls, and to Section 3.3 for the test equipment set-up. Refer also to Section 6 where the parts lists, grid reference index and diagrams will provide detailed information on identifying and locating components and test points on the main PCB. The parts list and diagrams for the VCO PCB are in Part E.

The following topics are covered in this section.

Section	Title	Page
4.1	Current Consumption	4.3
4.2	Output Power	4.3
4.3	Output Frequency	4.3
4.4	Timers	4.3
4.5	Frequency Response	4.4
4.6	Audio Level Input Sensitivity	4.7

Editor's Note: The CTCSS adjustment procedure described in Section 4.7 has been moved to a more appropriate location in Section 3 as part of the Initial Tuning & Adjustment procedure (refer to Section 3.4.5 and Section 3.9.3).

Figure	Title	Page
4.1	T836/837 Transmit Timers	4.4
4.2	T836/837 Pre-emphasis Response	4.5
4.3	T836/837 Limiting Response	4.6
4.4	T836 Main Tuning & Adjustment Controls	4.9
4.5	T837 Main Tuning & Adjustment Controls	4.11

 Copyright TEL

4.1 Current Consumption

Connect the T836/837 to a 13.8V power supply.

Connect an RF power meter to the T836/837 output socket.

Check that the current in the 13.8V power cable is less than 150mA.

Key the T836/837 by earthing the Tx-Key line (the carrier "On" LED should light).

T836 Only: Adjust RV320 (power adjust) to obtain 25W output power.

Check that the current is as follows:

T836	<4.5A
T837	<600mA.

4.2 Output Power

Connect an RF power meter to the T836/837 output socket.

Key the T836/837 by earthing the Tx-Key line.

Check that:

T836	the output power adjusts to >30W with RV320 (power adjust) turned fully clockwise
T837	the output power is 800mW ±200mW.

4.3 Output Frequency

Connect the T836/837 output to a frequency counter via an attenuator pad:

T836	40dB pad
T837	20dB pad.

Measure the output frequency and, if necessary, adjust the TCXO (=IC700) to trim to the nominal frequency (±100Hz).

4.4 Timers

The transmit tail timer, transmit timeout timer and transmit lockout timer can all be set from PGM800Win. The fields for setting these are found on the system information page. These three timers operate as follows (refer also to Figure 4.1):

Timer	Function	Adjustment
Transmit Tail	Sets the tail time during which the transmitter stays keyed after the external key source has been removed.	0-5 seconds in 100ms steps[a]
Transmit Timeout	Sets the maximum continuous transmission time. Once the timer has timed out, the transmitter must be keyed again, unless prevented by the transmit lockout timer.	0-300 seconds[b] in 10 second steps
Transmit Lockout	Sets the period of time that must elapse after a timeout before the transmitter can re-transmit. Once the timer has timed out, the transmitter can be keyed again.	0-60 seconds in 10 second steps

a. Adjustable in 20ms steps in PGM800Win version 2.12 and later.
b. Adjustable from 0 to 600 seconds in PGM800Win version 2.12 and later.

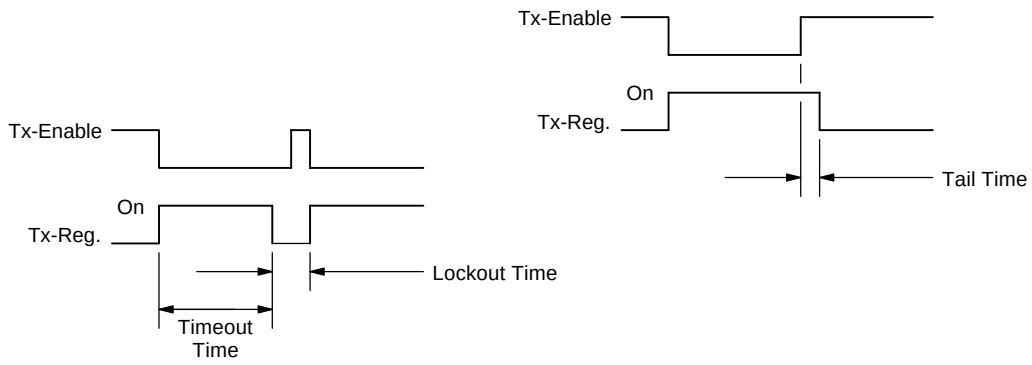

Figure 4.1 T836/837 Transmit Timers

4.5 Frequency Response

If the T836/837 has been correctly adjusted, the pre-emphasis and limiting responses should closely match those shown in Figure 4.2 and Figure 4.3 respectively.

Note: The limits shown on these graphs should not be exceeded.

- If you are using an RF test set, turn off all filters.
- Measure the pre-emphasis response as follows:

  Reduce the line level to give ±1kHz (±0.8kHz) [±0.5kHz] deviation at 1kHz.

  Sweep the modulation frequency.

  The response should closely match that shown in Figure 4.2.
- Measure the limiting response as follows:

  Set the line level to give ±3kHz (±2.4kHz) [±1.5kHz] deviation at 1kHz.

 Copyright TEL

Increase the line level 20dB and sweep the modulation frequency. The response should closely match that shown in Figure 4.3.

Wide Bandwidth

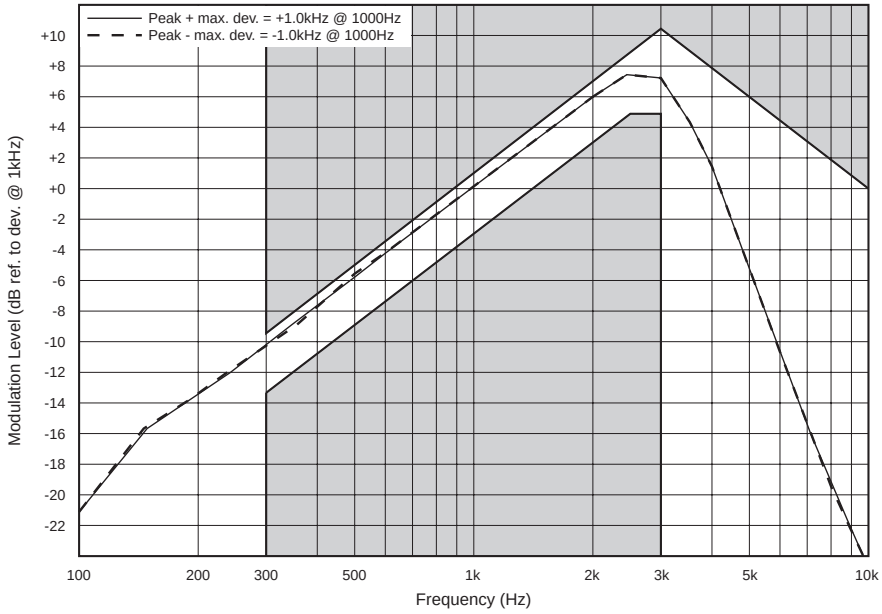

Mid Bandwidth

The mid bandwidth graph is the same shape as the wide bandwidth graph. The deviation figures are as follows:

peak + max. deviation = +0.8kHz
peak - max. deviation = -0.8kHz.

Narrow Bandwidth

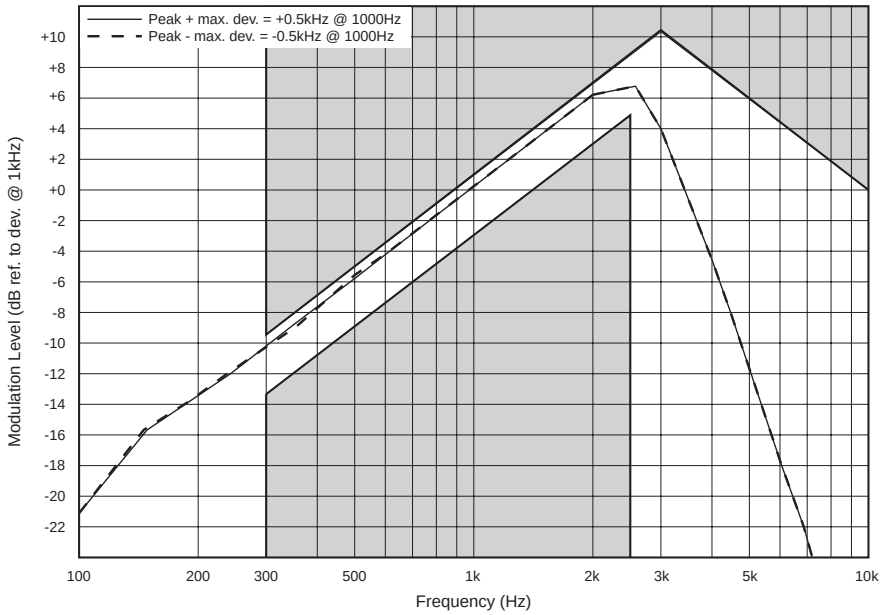

Figure 4.2 T836/837 Pre-emphasis Response

Wide Bandwidth

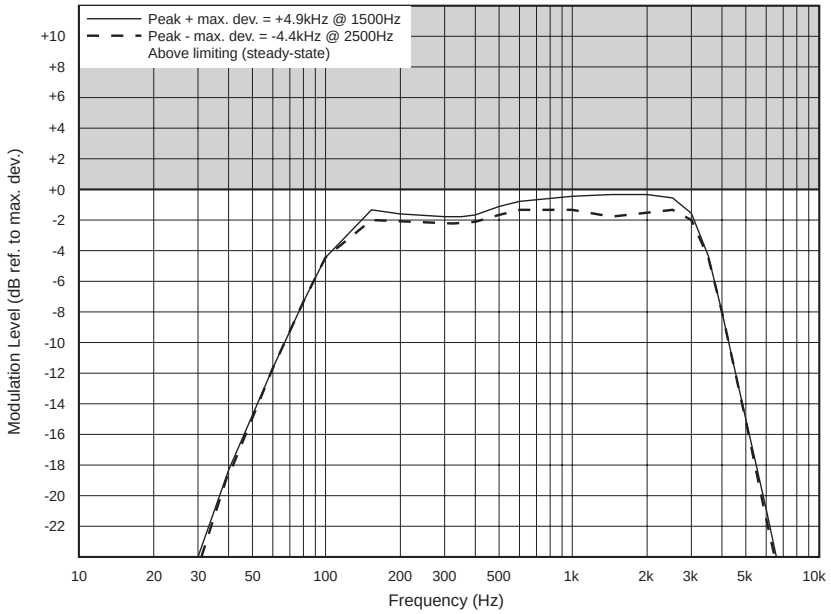

Mid Bandwidth

The mid bandwidth graph is the same shape as the wide bandwidth graph. The deviation figures are as follows:

peak + max. deviation = +4kHz
peak - max. deviation = -4kHz.

Narrow Bandwidth

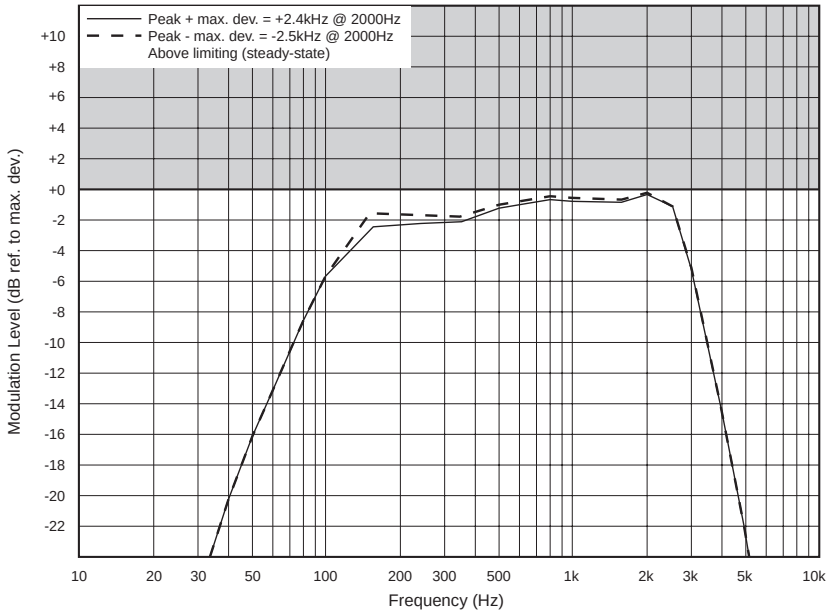

Figure 4.3 T836/837 Limiting Response

 Copyright TEL

4.6 Audio Level Input Sensitivity

- Adjust RV210 (line sensitivity) fully clockwise.
- Check that the input sensitivities are better than those specified below:

Line Input	600 ohms, ±3kHz (±2.4kHz) [±1.5kHz] deviation at 1kHz:	
	with compressor	-50dBm
	without compressor	-30dBm
Microphone Input	600 ohms, ±3kHz (±2.4kHz) [±1.5kHz] deviation at 1kHz:	
	with compressor	-75dBm
	without compressor	-55dBm
CTCSS Input	1kHz deviation at 150Hz	500mV rms

Note: A degraded signal to noise ratio can be expected with the compressor selected. The extent of the degradation is dependent on the audio input level.

Editor's Note: The CTCSS adjustment procedure described in Section 4.7 has been moved to a more appropriate location in Section 3 as part of the Initial Tuning & Adjustment procedure (refer to Section 3.4.5 and Section 3.9.3).

Copyright TEL

5 T836/837 Fault Finding

Caution: **This equipment contains CMOS devices which are susceptible to damage from static charges. Refer to Section 1.2 in Part A for more information on anti-static procedures when handling these devices.**

The following test procedures and fault finding flow charts may be used to help locate a hardware problem, however they are by no means a complete fault finding procedure. If you still cannot trace the fault after progressing through them in a logical manner, contact your nearest Tait Dealer or Customer Service Organisation. If necessary, you can get additional technical help from Customer Support, Radio Systems Division, Tait Electronics Ltd, Christchurch, New Zealand (full contact details are on page 2).

Note 1: In this and following sections deviation settings are given first for wide bandwidth sets, followed by settings in brackets for mid bandwidth sets ( ) and narrow bandwidth sets [ ].

Note 2: Unless otherwise specified, the term "PGM800Win" used in this and following sections refers to version 2.00 and later of the software.

Refer to Section 6 where the parts lists, grid reference index and diagrams will provide detailed information on identifying and locating components and test points on the main PCB. The parts list and diagrams for the VCO PCB are in Part E.

The following topics are covered in this section

Section	Title	Page
5.1	**Visual Checks**	**5.3**
5.2	**Component Checks**	**5.3**
5.3	**Front Panel LED Indicator**	**5.3**
5.4	**DC Checks**	**5.4**
5.4.1	Power Rails	5.4
5.4.2	VCO Locking	5.4
5.5	**RF Checks**	**5.5**
5.5.1	T836 Drive Power	5.5
5.5.2	T836 PA Output Power	5.5
5.5.3	T837 Output Power	5.5
5.5.4	Audio And Modulation	5.6
5.6	**PGM800Win Generated Errors**	**5.7**

Section	Title	Page
5.7	**Fault Finding Charts**	**5.8**
5.7.1	Microcontroller	5.8
5.7.1.1	Basic Checks	5.8
5.7.1.2	Serial Communications	5.9
5.7.1.3	CTCSS Encode	5.10
5.7.2	Regulator	5.11
5.7.3	Synthesiser	5.12
5.7.4	T836 Drive Amplifier	5.15
5.7.5	T836 PA & Power Control	5.16
5.7.6	T837 Exciter Drive Amplifier	5.17
5.7.7	Audio Processor	5.18
5.8	To Replace The T836 PA Transistors (Q415 & Q425)	5.19

Figure	Title	Page
5.1	RF Diode Probe Circuit	5.5
5.2	Positioning Of Components Around Q425 & Q415	5.20

 Copyright TEL

5.1 Visual Checks

Remove the covers from the T836/837 and inspect the PCB for damaged or broken components, paying particular attention to the surface mounted devices (SMD's).

Check for defective solder joints. If repair or replacement is considered necessary, refer to Section 3 of Part A.

5.2 Component Checks

If you suspect a transistor is faulty, you can assess its performance by measuring the forward and reverse resistance of the junctions. Unless the device is completely desoldered, first make sure that the transistor is not shunted by some circuit resistance. Use a good quality EVM (e.g. Fluke 75) for taking the measurements (or a 20k ohm/V or better multimeter, using only the medium or low resistance ranges).

The collector current drawn by multi-junction transistors is a further guide to their performance.

If an IC is suspect, the most reliable check is to measure the DC operating voltages. Due to the catastrophic nature of most IC failures, the pin voltages will usually be markedly different from the recommended values in the presence of a fault. The recommended values can be obtained from either the circuit diagram or the component data catalogue.

5.3 Front Panel LED Indicator

The green "Supply" LED on the T836/837 front panel will flash according to the conditions described in the following table:

Flash Rate		Condition
fast	(⅓ sec. on/⅓ sec. off approx.)	T836/837 is linked with PGM800Win
unequal	(⅓ sec. on/1 sec. off approx.)	microcontroller has detected an internal communications error - refer to Section 5.7.1

Where two or more conditions occur at the same time, the precedence is in the order shown above (i.e. T836/837 linked has the highest priority, followed by internal error).

5.4 DC Checks

5.4.1 Power Rails

Refer to the test points and options diagrams in Section 6 for test point locations, and to the regulator fault finding chart (Section 5.7.2) for fault diagnosis.

Check the 13.8V (TP601) and 9V (TP602) supplies at their test points in the regulator compartment with a DMM.

Check the 5V (TP604) and 20V (TP603) rails at their respective test points in the regulator compartment.

Check that Tx-Reg. (TP305 in the exciter compartment) comes up to 8.8V when the exciter is keyed.

Check the +5V digital regulator output (TP607 in the regulator compartment).

Check for short circuits.

5.4.2 VCO Locking

Key the exciter.

Using a DMM, monitor the VCO control voltage at PL4-1 or the junction of L1 and R1 on the VCO PCB.

If the synthesiser is locked and the VCO aligned, the voltage at this point should be between 5 and 13V.

If the VCO is not locked, refer to the synthesiser fault finding chart (Section 5.7.3).

 Copyright TEL

5.5 RF Checks

In-circuit RF levels may be measured with an RF probe on which the earth lead has been shortened to a minimum (i.e. 13mm). Refer to the circuit diagrams for typical levels.

Figure 5.1 shows a suitable RF probe circuit.

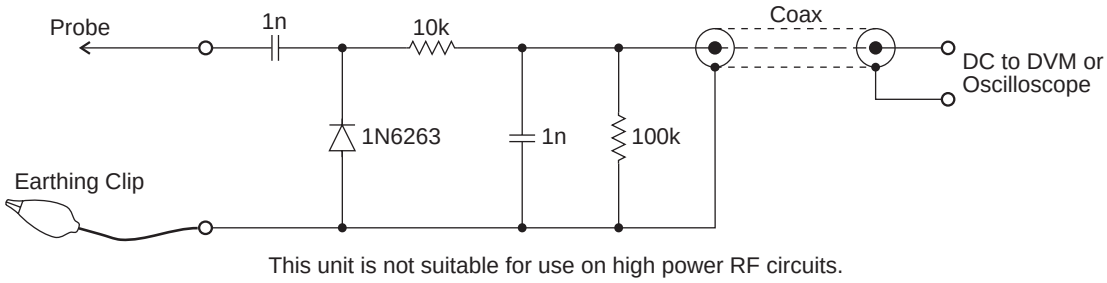

Figure 5.1 RF Diode Probe Circuit

5.5.1 T836 Drive Power

Refer to the drive amplifier fault finding chart (Section 5.7.4).

Ensure that the VCO locks (refer to Section 5.4.2).

Connect the drive output to a power meter and key the transmitter.

Check that the output power is between 600 and 1000mW.

Note: If the synthesiser is out of lock, the lock detector (synthesiser IC740 and comparator IC750) will prevent the RF signal from reaching the PA by switching the supply to the exciter amplifier (Q340, Q345).

5.5.2 T836 PA Output Power

Reconnect the drive output to the PA input.

Connect the PA to a power meter and key the transmitter.

Check that the output power is >30W with RV320 (power adjust) adjusted fully clockwise.

5.5.3 T837 Output Power

Refer to the exciter drive amplifier fault finding chart (Section 5.7.6).

Ensure that the VCO locks (refer to Section 5.4.2).

Connect the exciter output to a power meter and key the exciter.

Check that the output power is between 600 and 1000mW.

Note: If the synthesiser is out of lock, the lock detector (synthesiser IC740 and comparator IC750) will prevent the RF signal from reaching the PA by switching the supply to the exciter amplifier (Q340, Q345).

5.5.4 Audio And Modulation

Refer to the audio processor fault finding chart (Section 5.7.7).

Set up the audio processor as described in Section 3.9.

Check that the demodulated RF output has the frequency response referred to in Section 4.5 with at least ±5kHz (±4kHz) [±2.5kHz] deviation available at 1kHz modulating frequency.

If the above result is not achieved, either the two modulators are incorrectly adjusted or a fault condition exists.

 Copyright TEL

5.6 PGM800Win Generated Errors

The following errors are those most likely to occur using PGM800Win. Refer to the PGM800Win software user's manual for a complete list of error messages.

Channel Switch Set

The programmed default channel change was not accepted by the base station because a channel is selected externally. Try turning the external channel switch off to change the default channel in PGM800Win.

Synth Out Of Lock

The synthesiser received incorrect data, or the data was corrupted. Enter a frequency within the VCO switching range, or tune the VCO.

Internal Error

Data could not be read from the base station due to an internal error. Check for shorts or open circuits on the SDA, SCK, SYNTH and EPOT lines. The SDA, SCK and SYNTH are normally high, and the EPOT is normally low.

Write/Read To An Unlinked Module

The link to the module does not exist. Undefined error.

5.7 Fault Finding Charts

Note: The standard test point designations used in this section are as follows:

TP601	13.8V
TP602	9V
TP603	20V
TP604	5V

5.7.1 Microcontroller (IC810)

5.7.1.1 Basic Checks

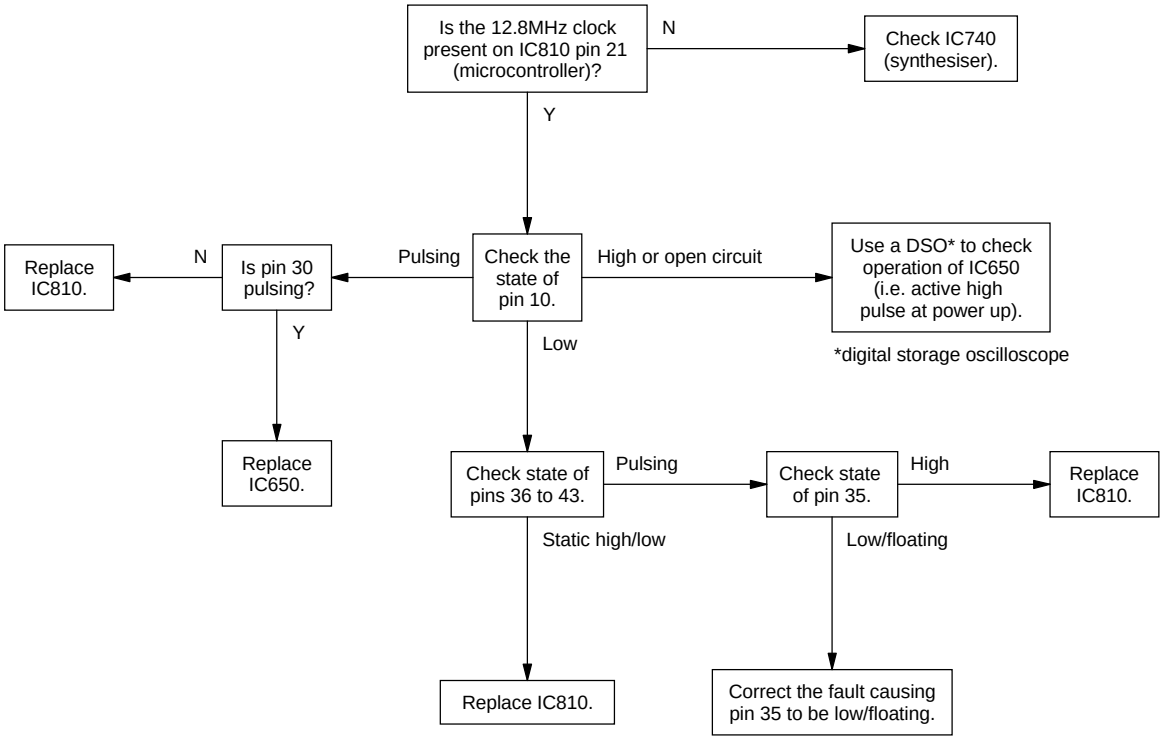

 Copyright TEL

5.7.1.2 Serial Communication

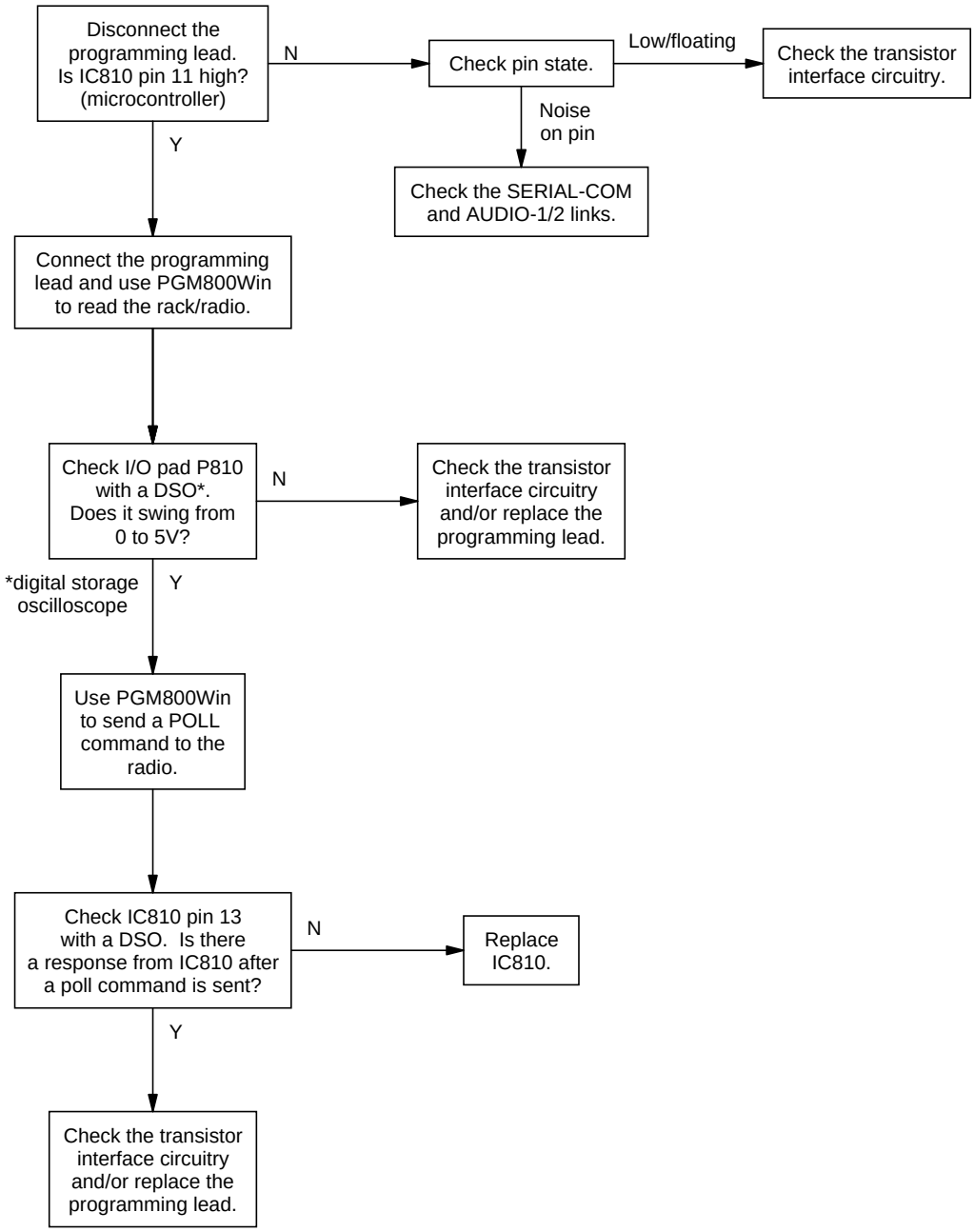

5.7.1.3 CTCSS Encode

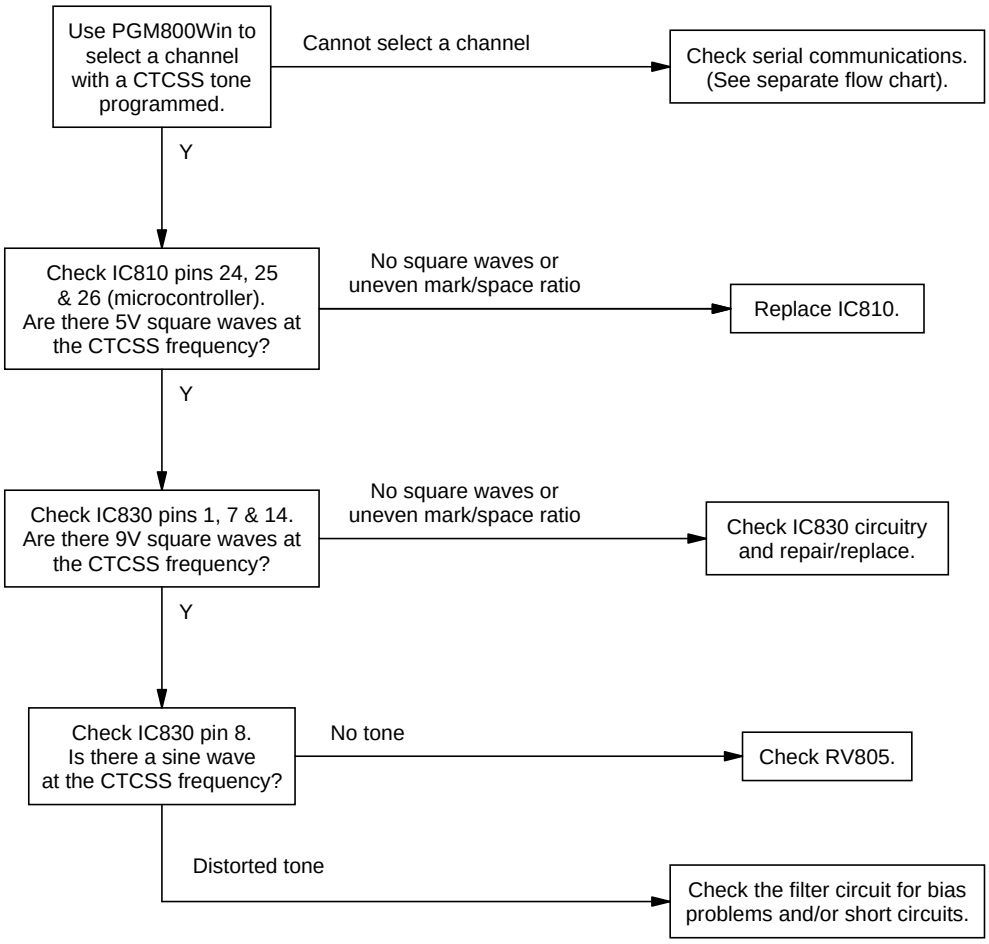

 Copyright TEL

5.7.2 Regulator

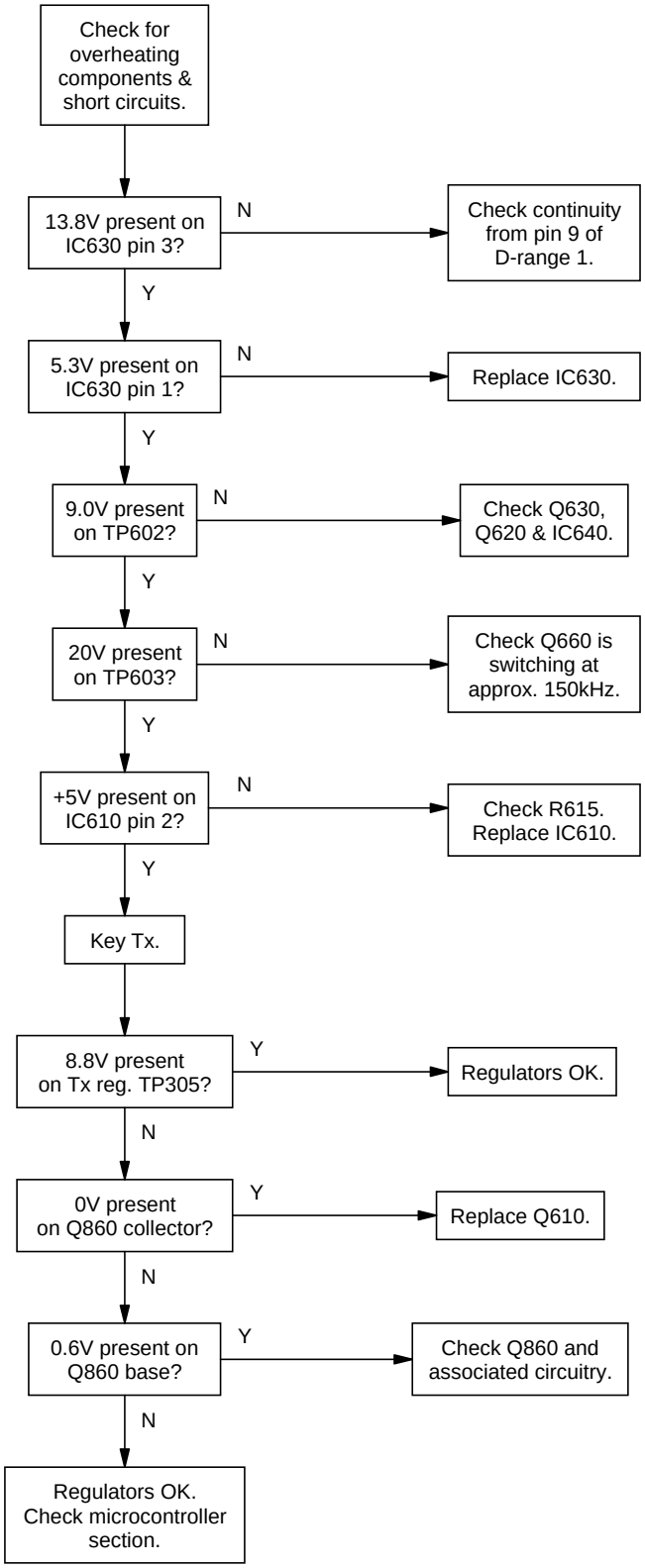

5.7.3 Synthesiser

Refer to the synthesiser circuit diagram (sheet 7) in Section 6 and the VCO circuit diagram in Part E.

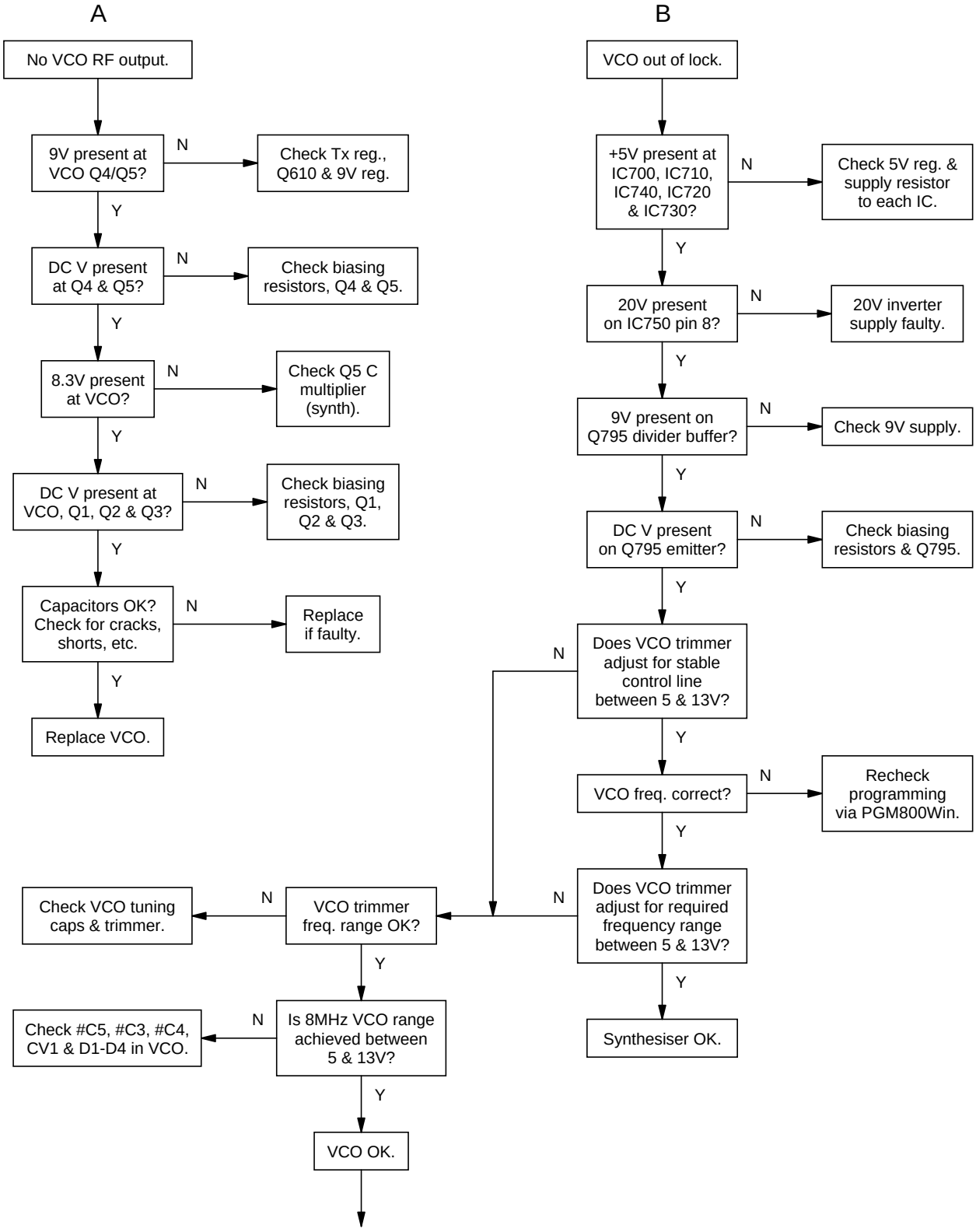

Continued on the next page

 Copyright TEL

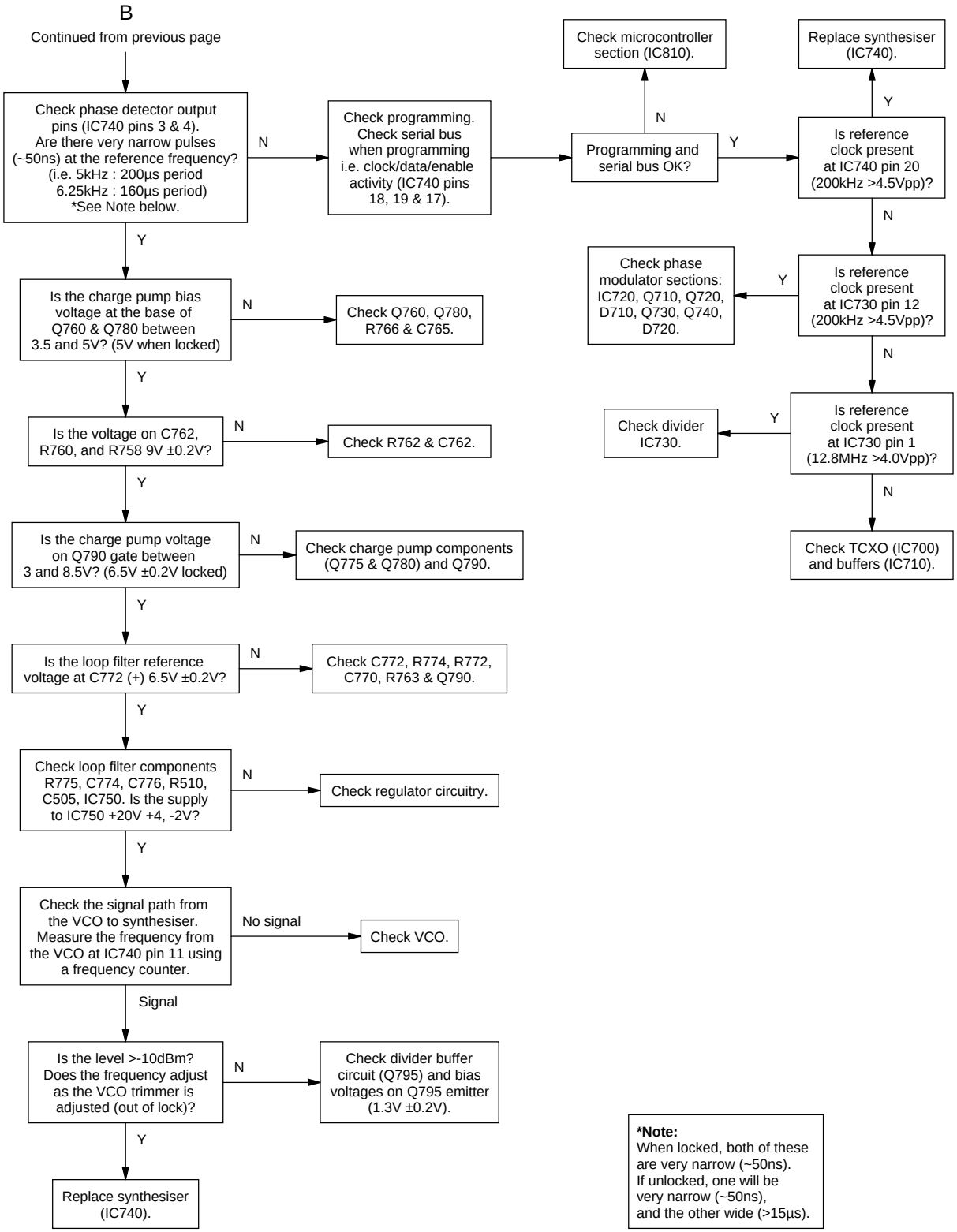
B
Continued from previous page
Check phase detector output pins (IC740 pins 3 & 4). Are there very narrow pulses (~50ns) at the reference frequency? (i.e. 5kHz : 200µs period 6.25kHz : 160µs period) *See Note below.
N
Check programming. Check serial bus when programming i.e. clock/data/enable activity (IC740 pins 18, 19 & 17).
Programming and serial bus OK?
N
Check microcontroller section (IC810).
Y
Is reference clock present at IC740 pin 20 (200kHz >4.5Vpp)?
Y
Replace synthesiser (IC740).
N
Is reference clock present at IC730 pin 12 (200kHz >4.5Vpp)?
Y
Check phase modulator sections: IC720, Q710, Q720, D710, Q730, Q740, D720.
N
Is reference clock present at IC730 pin 1 (12.8MHz >4.0Vpp)?
Y
Check divider IC730.
N
Check TCXO (IC700) and buffers (IC710).
Y
Is the charge pump bias voltage at the base of Q760 & Q780 between 3.5 and 5V? (5V when locked)
N
Check Q760, Q780, R766 & C765.
Y
Is the voltage on C762, R760, and R758 9V ±0.2V?
N
Check R762 & C762.
Y
Is the charge pump voltage on Q790 gate between 3 and 8.5V? (6.5V ±0.2V locked)
N
Check charge pump components (Q775 & Q780) and Q790.
Y
Is the loop filter reference voltage at C772 (+) 6.5V ±0.2V?
N
Check C772, R774, R772, C770, R763 & Q790.
Y
Check loop filter components R775, C774, C776, R510, C505, IC750. Is the supply to IC750 +20V +4, -2V?
N
Check regulator circuitry.
Y
Check the signal path from the VCO to synthesiser. Measure the frequency from the VCO at IC740 pin 11 using a frequency counter.
No signal
Check VCO.
Signal
Is the level >-10dBm? Does the frequency adjust as the VCO trimmer is adjusted (out of lock)?
N
Check divider buffer circuit (Q795) and bias voltages on Q795 emitter (1.3V ±0.2V).
Y
Replace synthesiser (IC740).
*Note:
When locked, both of these are very narrow (~50ns).
If unlocked, one will be very narrow (~50ns), and the other wide (>15µs).

C

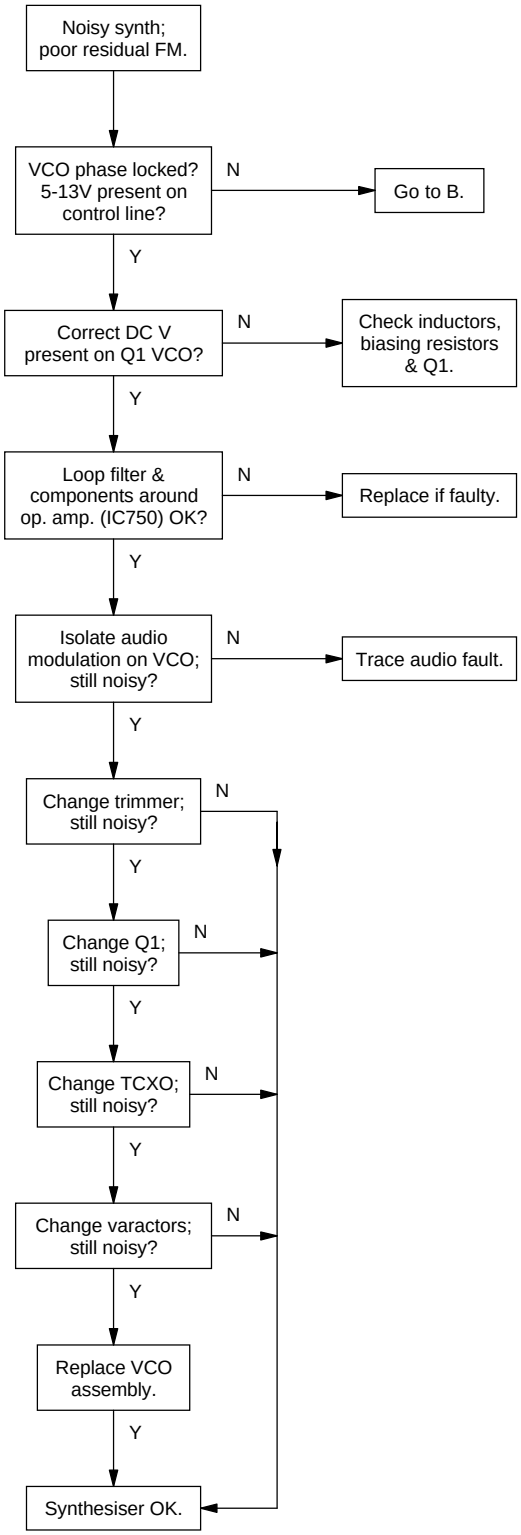

 Copyright TEL

5.7.4 T836 Drive Amplifier

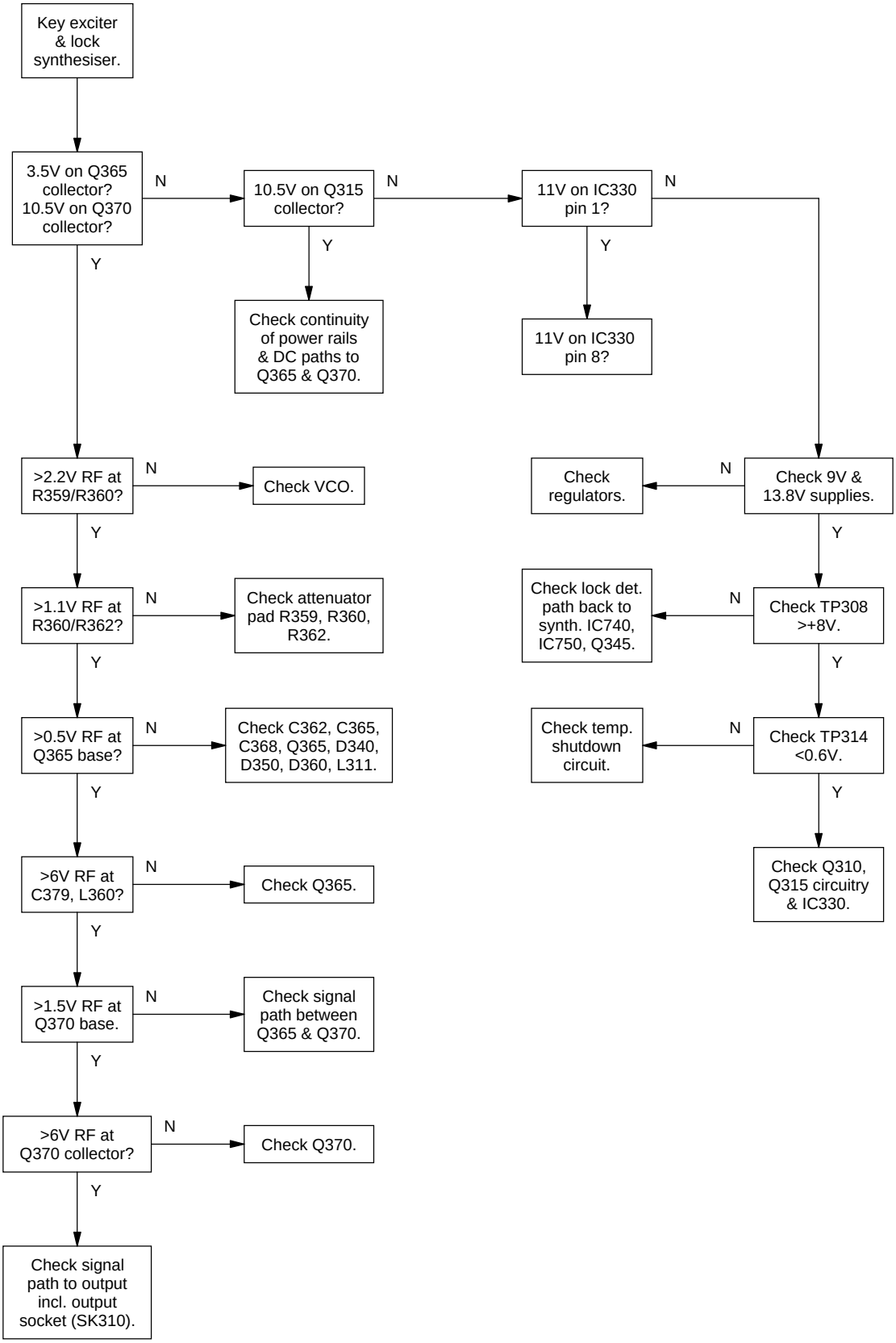

5.7.5 T836 PA & Power Control

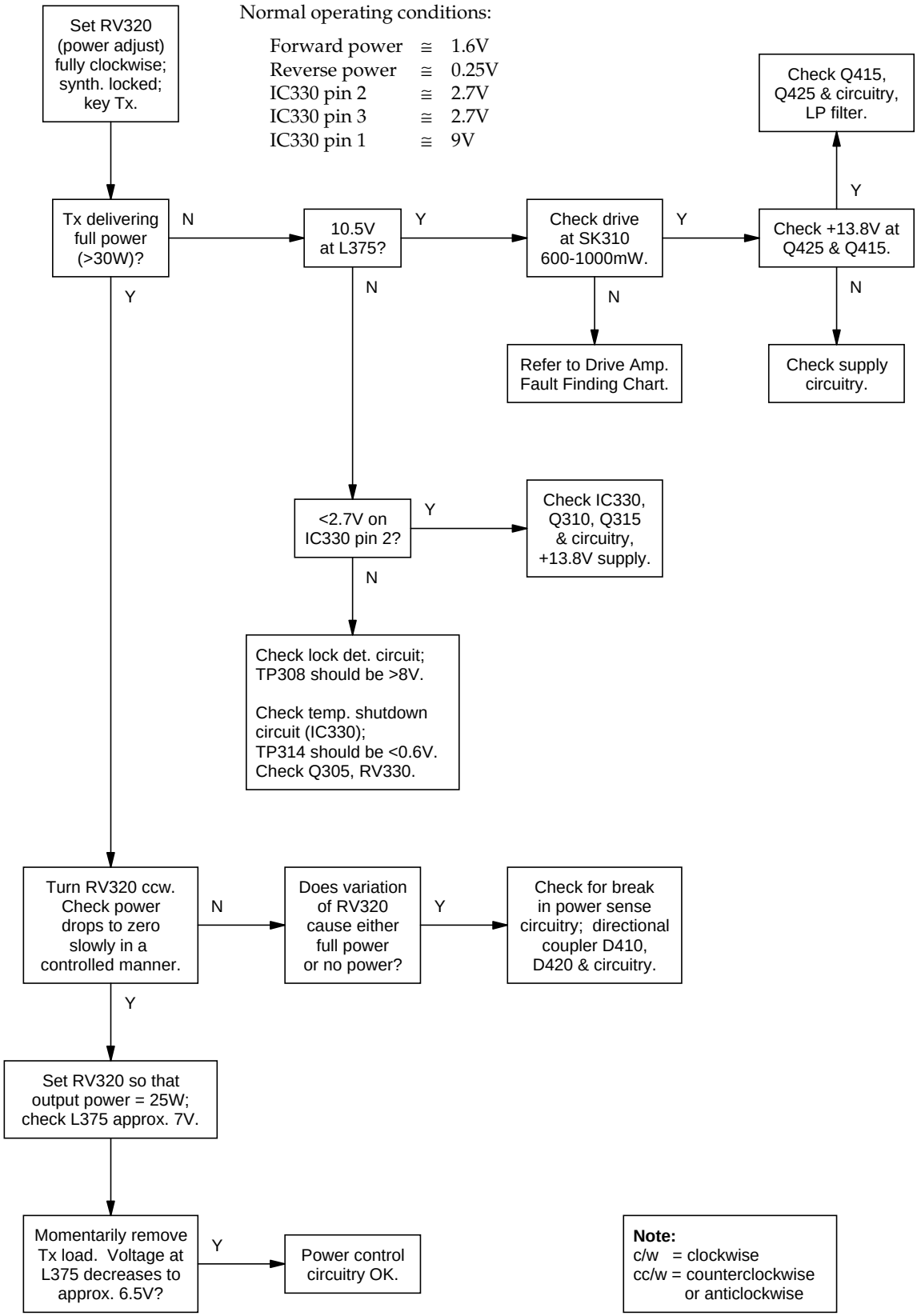

 Copyright TEL

5.7.6 T837 Exciter Drive Amplifier

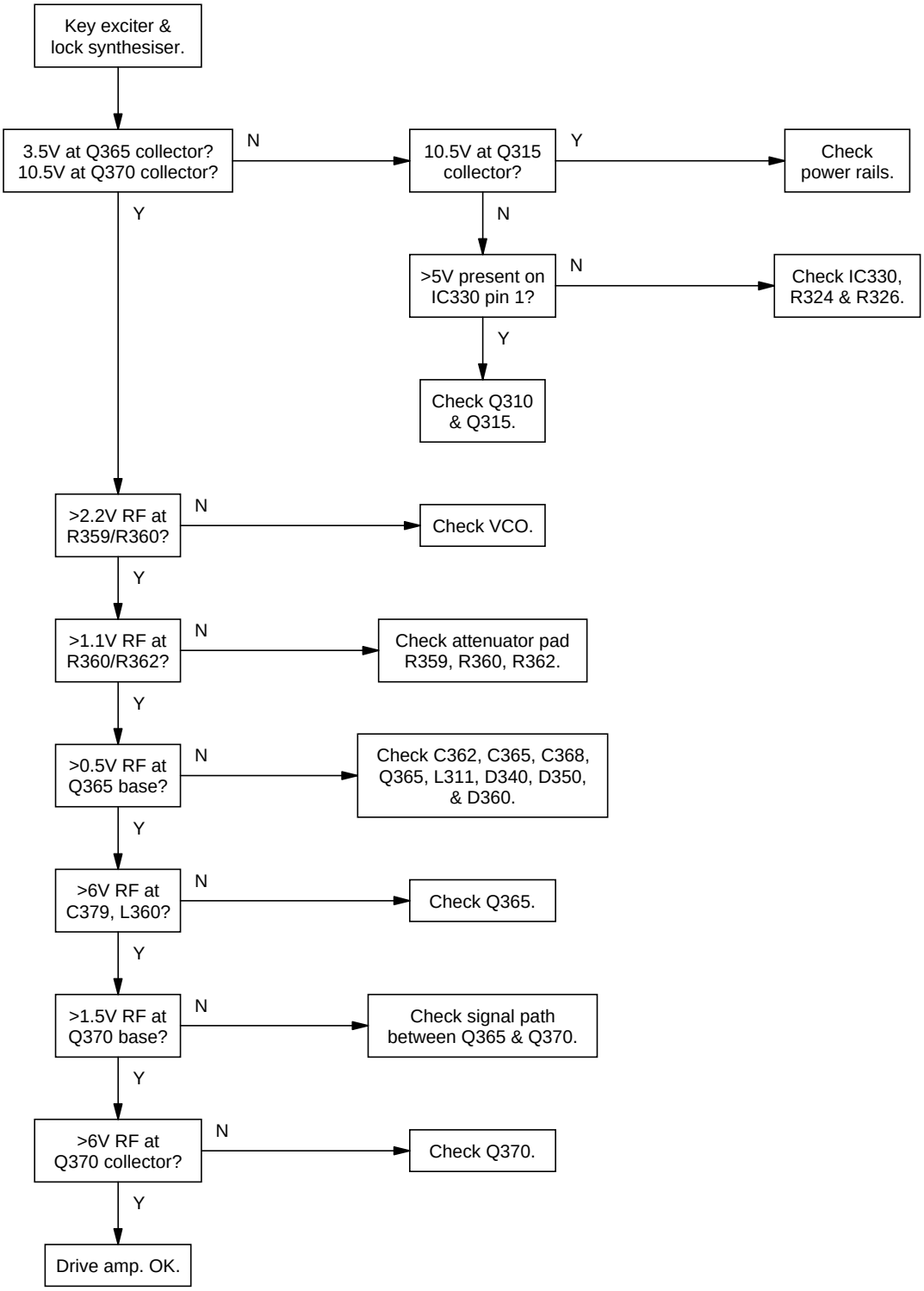

5.7.7 Audio Processor

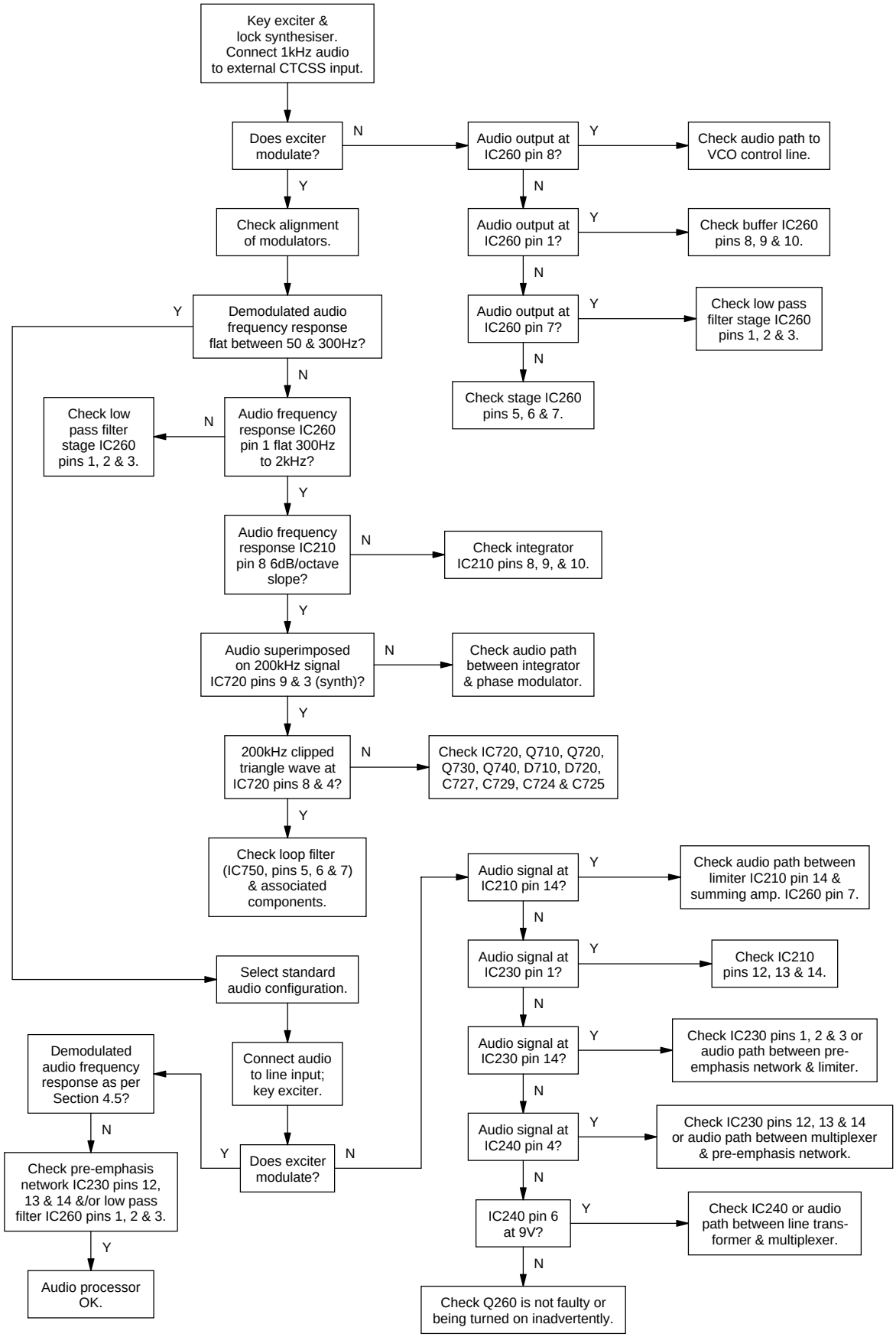

 Copyright TEL

5.8 To Replace The T836 PA Transistors (Q415 & Q425)

Caution: **Failure to comply with the following procedure can result in failure of the device due to poor heatsinking, or worse, can endanger the health of the assembler if the beryllium oxide die carrier is smashed during assembly.**

Caution: **As the location of certain components in the PA is critical to performance, it is important that any components removed or disturbed are refitted in *exactly* the same position.**

Caution: **Before attempting to remove a transistor, note the position, type and value of each capacitor and resistor so that it can be replaced in *exactly* the same position (refer to Figure 5.2).**

Caution: **Do not apply too much heat or pressure to the PCB pads and tracks as you may damage them or lift them from the PCB, causing permanent damage to the transmitter.**

Remove the resistors and/or chip capacitors from around the transistor.

Desolder the transistor tabs by heating with a soldering iron and lifting away from the PCB with a screwdriver or thin stainless steel spike. Unscrew the transistor stud nut and remove the device.

Remove any excess solder from the PCB pads with solder wick.

Trim the tabs of the replacement transistor so that the device sits neatly on the PCB pads provided.

Lightly tin the underside of the transistor tabs. Remove any excess solder to leave a thin, even layer on the tabs.

Apply a small amount of heatsink compound (Dow-Corning 340 or equivalent) to the transistor mounting surface. Sufficient compound should be used to ensure an even film over the entire mounting surface.

Place the transistor on the PCB in the correct orientation and ensure the tabs are flush to the surface. Lightly solder one tab to the PCB. Torque down the retaining nut to the correct torque (0.7Nm/6in.lbf.).

Caution: **Do not solder all the tabs before torquing down otherwise the device may be broken.**

Solder all transistor tabs to the PCB.

Replace each resistor and/or capacitor in exactly the same position as noted previously.

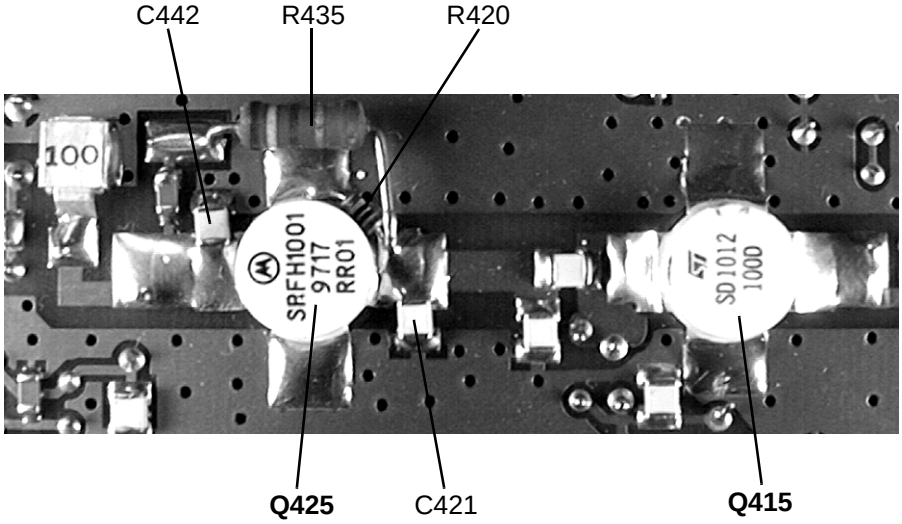

Figure 5.2 Positioning Of Components Around Q425 & Q415

 Copyright TEL

6 T836/837 PCB Information

Caution: **This equipment contains CMOS devices which are susceptible to damage from static charges. Refer to Section 1.2 in Part A for more information on anti-static procedures when handling these devices.**

This section provides the following information on the T836 transmitter and T837 exciter:

- parts lists
- grid reference indexes
- mechanical assembly drawings
- PCB layouts
- test points & options connections drawings
- circuit diagrams.

Section	Title	IPN	Page
6.1	Introduction		6.1.3
6.2	T836 Transmitter PCB	220-01395-02	6.2.1
6.3	T837 Exciter PCB	220-01390-02 220-01390-03	6.3.1 6.3.27

Copyright TEL

6.1 Introduction

Product Type Identification

You can identify the transmitter or exciter type by checking the product code printed on a label on the rear of the chassis (product codes are explained in Section 1.3 in this Part of the manual, and Figure 1.1 in Part A shows typical labels). You can further verify the product type by checking the placement of an SMD resistor in the table that is screen printed onto the top side of the PCB, similar to the example drawn below (this table also appears in the resist layer on the bottom side of the PCB). In this example, the resistor indicates that the product was built as a T836-10-XXXX.

▮ ▮	836-
▮ ▮	836-
▮ ▮	836-
PRODUCT TYPE	

PRODUCT TYPE			
▮	836-10	▮ ▮	836-20
▮ ▮	836-13	▮ ▮	836-23
▮ ▮	836-15	▮ ▮	836-25

Note: The only function of this resistor is to indicate the product type. It has no effect on the circuitry or operation of the transmitter or exciter.

PCB Identification

All PCBs are identified by a unique 10 digit "internal part number" (IPN), e.g. 220-12345-00, which is screen printed onto the PCB (usually on the top side), as shown in the example below:

The last 2 digits of this number define the issue status, which starts at 00 and increments through 01, 02, 03, etc. as the PCB is updated. Some issue PCBs never reach full production status and are therefore not included in this manual. A letter following the 10 digit IPN has no relevance in identifying the PCB for service purposes.

Note: It is important that you identify which issue PCB you are working on so that you can refer to the appropriate set of PCB information.

Parts Lists

The 10 digit numbers (000-00000-00) in this Parts List are “internal part numbers” (IPNs). We can process your spare parts orders more efficiently and accurately if you quote the IPN and provide a brief description of the part.

The components listed in this parts list are divided into two main types: those with a circuit reference (e.g. C2, D1, R121, etc.) and those without (miscellaneous and mechanical).

Those with a circuit reference are grouped in alphabetical order and then in numerical order within each group. Each component entry comprises three or four columns, as shown below:

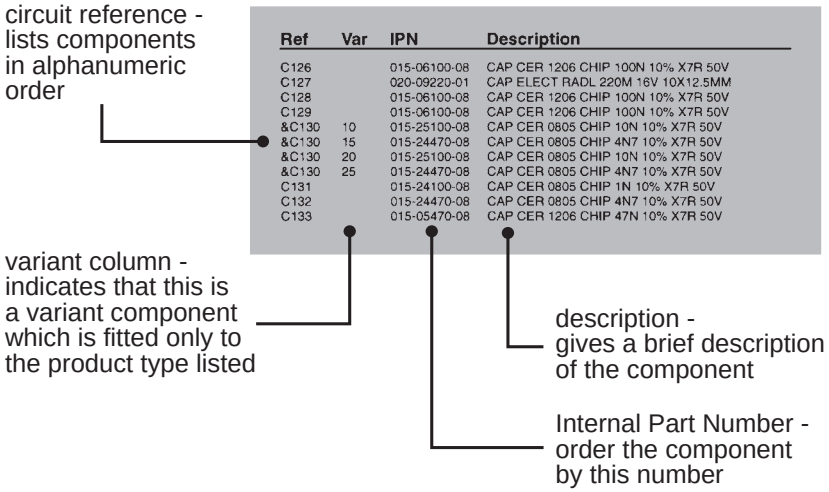

Ref	Var	IPN	Description
C126		015-06100-08	CAP CER 1206 CHIP 100N 10% X7R 50V
C127		020-09220-01	CAP ELECT RADL 220M 16V 10X12.5MM
C128		015-06100-08	CAP CER 1206 CHIP 100N 10% X7R 50V
C129		015-06100-08	CAP CER 1206 CHIP 100N 10% X7R 50V
&C130	10	015-25100-08	CAP CER 0805 CHIP 10N 10% X7R 50V
&C130	15	015-24470-08	CAP CER 0805 CHIP 4N7 10% X7R 50V
&C130	20	015-25100-08	CAP CER 0805 CHIP 10N 10% X7R 50V
&C130	25	015-24470-08	CAP CER 0805 CHIP 4N7 10% X7R 50V
C131		015-24100-08	CAP CER 0805 CHIP 1N 10% X7R 50V
C132		015-24470-08	CAP CER 0805 CHIP 4N7 10% X7R 50V
C133		015-05470-08	CAP CER 1206 CHIP 47N 10% X7R 50V

The mechanical and miscellaneous section lists the variant and common parts in IPN order.

Parts List Amendments

At the front of the parts list is the Parts List Amendments box (an example of which is shown below). This box contains a list of component changes which took place after the parts list and diagrams in this section were compiled. These changes (e.g. value changes, added/deleted components, etc.) are listed by circuit reference in alphanumeric order and supersede the information given in the parts list or diagrams. Components without circuit references are listed in IPN order. The number in brackets at the end of each entry refers to the Tait internal Change Order document.

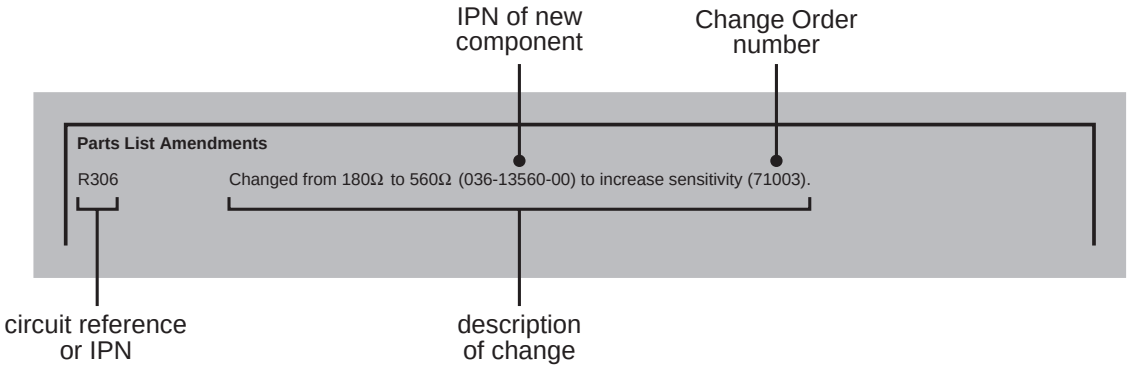

 Copyright TEL

Variant Components

A variant component is one that has the same circuit reference but different value or specification in different product types. Where two products share the same PCB, the term “variant” is also used to describe components unplaced in one product. Variant components have a character prefix, such as “&”, “=” or “#”, before the circuit reference (e.g. &R100).

The table below explains the variant prefixes used in T800 Series II products:

If the variant prefix is. . .	the component will. . .
&	change according to channel spacing
=	change according to frequency stability
#	change according to frequency range
%	be placed or unplaced for special applications
*	be unplaced in one product (where two products share the same PCB)

Grid Reference Index

This section contains a component grid reference index to help you find components and labelled pads on the PCB layouts and circuit diagrams. This index lists the components and pads in alphanumeric order, along with the appropriate alphanumeric grid references, as shown below:

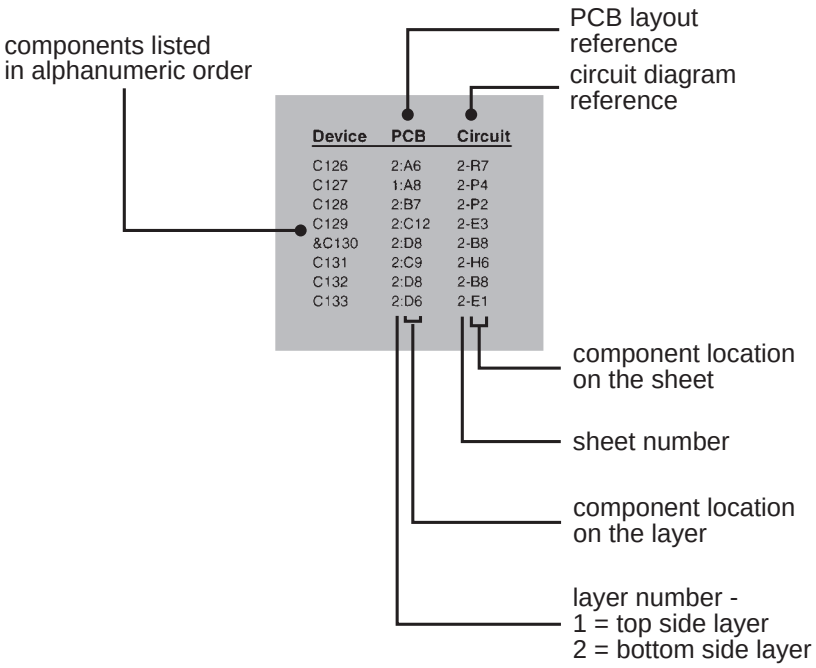

Using CAD Circuit Diagrams

Reading a CAD circuit diagram is similar to reading a road map, in that both have an alphanumeric border. The circuit diagrams in this manual use letters to represent the horizontal axis, and numbers for the vertical axis. These circuit diagram "grid references" are useful in following a circuit that is spread over two or more sheets.

When a line representing part of the circuitry is discontinued, a reference will be given at the end of the line to indicate where the rest of the circuitry is located, as shown below. The first digit refers to the sheet number and the last two characters refer to the location on that sheet of the continuation of the circuit (e.g. 1R3).

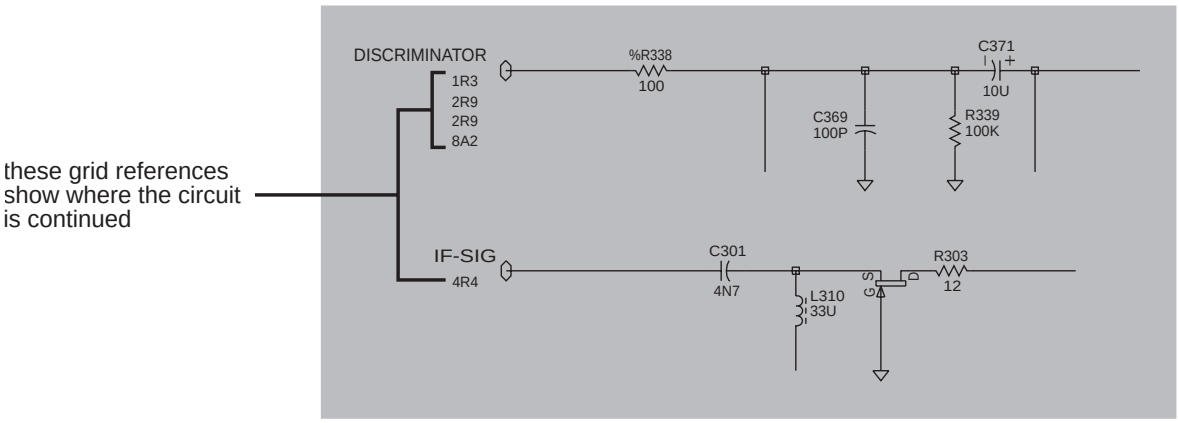

 Copyright TEL

6.2 T836 Transmitter PCB

This section contains the following information.

IPN	Section	Page
220-011395-02	Parts List	6.2.3
	Mechanical & Miscellaneous Parts	6.2.8
	Mechanical Assembly	6.2.9
	Grid Reference Index	6.2.11
	PCB Layout - Top Side	6.2.15
	PCB Layout - Bottom Side	6.2.16
	Test Points & Options Connections - Top & Bottom Side	6.2.17
	Transmitter Overview Diagram	6.2.18
	Audio Processor Circuit Diagram	6.2.19
	Exciter Circuit Diagram	6.2.20
	PA Circuit Diagram	6.2.21
	VCO Section Circuit Diagram	6.2.22
	Regulators Circuit Diagram	6.2.23
	Synthesiser Circuit Diagram	6.2.24
	Microcontroller Circuit Diagram	6.2.25
	Harmonic Filter Circuit Diagram	6.2.26

Copyright TEL

T836 Parts List (IPN 220-01395-02)

How To Use This Parts List

The components listed in this parts list are divided into two main types: those with a circuit reference (e.g. C2, D1, R121, etc.) and those without (miscellaneous and mechanical).

Those with a circuit reference are grouped in alphabetical order and then in numerical order within each group. Each component entry comprises three or four columns: the circuit reference, variant (if applicable), IPN and description. A number in the variant column indicates that this is a variant component which is fitted only to the product type listed. Static sensitive devices are indicated by an (S) at the start of the description column.

The miscellaneous and mechanical section lists the variant and common parts in IPN order. Where possible, a number in the legend column indicates their position in the mechanical assembly drawing.

The Parts List Amendments box below lists component changes that took place after the parts list and diagrams in this section were compiled. These changes (e.g. value changes, added/deleted components, etc.) are listed by circuit reference in alphanumeric order and supersede the information given in the parts list or diagrams. Components without circuit references are listed in IPN order.

Parts List Amendments

&C269	T836-16-0000/836-26-0000: changed from 1p5 (IPN 015-21150-01) to 4p7 (IPN 015-21470-01) for FCC Type Approval requirements (710655).
C289	T836-16-0000/836-26-0000: changed from 47n (IPN 015-25470-08) to 68n (IPN 015-25680-08) for FCC Type Approval requirements (710655).
C314	Deleted to improve low frequency stability (710137).
C316, C347	Changed from 22n (015-25220-08) to 47n (015-25470-08) to improve cyclic keying & standby current (710059).
#C448	136-156MHz (-10, -13 & -15): changed from 39p (015-02390-02) to 33p (015-02330-02) to improve low band performance.
C910A, C950A	2p2 capacitors (015-01220-06) added on top of C910 & C950 to improve the low pass filter at 174MHz (710155).
D111	Changed from MR750 (IPN 001-00011-60) to MR2520L (IPN 001-00012-90) to provide overvoltage transient suppression (750087/88/89/90/91/92).
IC710	Changed from 74HCV04 (IPN 002-74910-04) to 74HC04 (IPN 002-74900-04) to increase the gain of the TCXO buffer (710312).
R313	Changed from 27k (036-15270-00) to 18k (036-15180-00) to improve cyclic keying & standby current (710059).
R320, R321	Changed from 47k (036-15470-00) to 33k (036-15330-00) to improve cyclic keying & standby current (710059). Changed from 33k (036-15330-00) to 56k (036-15560-00) for ACP IETS 300-113 compliance (710158).
R355	Changed from 82k (036-15820-00) to 47k (036-15470-00) to improve cyclic keying & standby current (710059).
R356	Changed from 47k (036-15470-00) to 220k (036-16220-00) to improve cyclic keying & standby current (710059).
R357	Changed from 47k (036-15470-00) to 22k (036-15220-00) to improve cyclic keying & standby current (710059). Changed from 22k (036-15220-00) to 47k (036-15470-00) for ACP IETS 300-113 compliance (710158).
R713	Changed from 22Ω (IPN 036-12220-00) to 0Ω (IPN 036-10000-00) to improve hum & noise performance (710837/839/840/841).
RV220	Changed to IPN 042-05470-07 (47k preset) because IPN 042-05470-06 no longer available (710793/96/97/98).
303-11169-03	T800 chassis: replaced by 303-11169-04 — New chassis and lid tooling introduced, incorporating mechanical improvements and better RF shielding (750027, 750028 & 750029). Note that the new lids should be used only with the new chassis.
312-01052-01	T800 top lid: replaced by 312-01052-02
312-01053-01	T800 bottom lid: replaced by 312-01053-02
349-00020-36	The two M3x8 Torx screws which secure the module into the rack frame have been replaced by M3x8 Pozidriv screws (IPN 349-00020-55) (750101/2/3/5/6).

Note: %D205 and %D210 are optional level limiting diodes for special applications.

=R705 (47 ohm) and =SK710 are fitted in place of =IC700 when an external frequency reference is used. These two components are supplied with the auxiliary D-range kits (T800-06-0000 & T800-06-0001).

Ref	Var	IPN	Description
C201		020-07470-92	CAP BI-P RA 4M7 50V 6X11 5 LS
C202		020-07470-92	CAP BI-P RA 4M7 50V 6X11 5 LS
C204		020-07470-92	CAP BI-P RA 4M7 50V 6X11 5 LS
C205		020-07470-92	CAP BI-P RA 4M7 50V 6X11 5 LS
C207		014-07470-00	CAP TANT CHIP 4U7 3.5 X 2.8MM
C209		015-25470-08	CAP CER 0805 47N 10% X7R 50V
C210		015-06100-08	CAP CER 1206 100N 10% X7R 50V
C211		015-06100-08	CAP CER 1206 100N 10% X7R 50V
C213		025-08100-02	CAP TANT BEAD 10M 10% 16V
C215		014-08220-01	(L)CAP TANT 22UF10V276MSER
C217		015-24220-08	CAP CER 0805 2N2 10% X7R 50V
C219		015-24100-08	CAP CER 0805 1N 10% X7R 50V
C221		014-08220-01	(L)CAP TANT 22UF10V276MSER
C223		015-06100-08	CAP CER 1206 100N 10% X7R 50V
C225		015-06100-08	CAP CER 1206 100N 10% X7R 50V
C227		015-06100-08	CAP CER 1206 100N 10% X7R 50V
C229		015-23150-01	CAP CER 0805 150P 5% NPO 50V
C230		015-06100-08	CAP CER 1206 100N 10% X7R 50V
C232		015-23150-01	CAP CER 0805 150P 5% NPO 50V
C233		020-08470-02	CAP ELE RA 47M 16V 6X11MM
C235		015-24100-08	CAP CER 0805 1N 10% X7R 50V
C237		020-07100-02	CAP ELE RA 1M 50V 5X11MM
C239		020-07470-92	CAP BI-P RA 4M7 50V 6X11 5 LS
C241		015-06100-08	CAP CER 1206 100N 10% X7R 50V
C242		025-08100-02	CAP TANT BEAD 10M 10% 16V
C243		015-24100-08	CAP CER 0805 1N 10% X7R 50V
C245		015-23150-01	CAP CER 0805 150P 5% NPO 50V
C247		015-23150-01	CAP CER 0805 150P 5% NPO 50V
C249		015-24100-08	CAP CER 0805 1N 10% X7R 50V
C251		015-24100-08	CAP CER 0805 1N 10% X7R 50V
C253		015-24100-08	CAP CER 0805 1N 10% X7R 50V
C255		015-24100-08	CAP CER 0805 1N 10% X7R 50V
C257		015-22470-01	CAP CER 0805 47P 5% NPO 50V
C259		015-25470-08	CAP CER 0805 47N 10% X7R 50V
C260		015-06100-08	CAP CER 1206 100N 10% X7R 50V
C261		014-07470-00	CAP TANT CHIP 4U7 3.5 X 2.8MM
C263		020-09100-04	CAP ELE RA 100M 10V 6.3X9MM
C265		020-07470-92	CAP BI-P RA 4M7 50V 6X11 5 LS
C267		015-24470-08	CAP CER 0805 4N7 10% X7R 50V
&C269	10	015-21150-01	CAP CER 0805 1P5+-1/4P NPO 50V
&C269	13	015-21150-01	CAP CER 0805 1P5+-1/4P NPO 50V
&C269	15	015-21470-01	CAP CER 0805 4P7+-1/4P NPO 50V
&C269	20	015-21150-01	CAP CER 0805 1P5+-1/4P NPO 50V
&C269	23	015-21150-01	CAP CER 0805 1P5+-1/4P NPO 50V
&C269	25	015-21470-01	CAP CER 0805 4P7+-1/4P NPO 50V
C271		015-22470-01	CAP CER 0805 47P 5% NPO 50V
C273		015-25470-08	CAP CER 0805 47N 10% X7R 50V
C275		015-23120-01	CAP CER 0805 120P 5% NPO 50V
C277		015-25100-08	CAP CER 0805 10N 10% X7R 50V
C279		015-24100-08	CAP CER 0805 1N 10% X7R 50V
C281		015-25220-08	CAP CER 0805 22N 10% X7R 50V
C283		015-21470-01	CAP CER 0805 4P7+-1/4P NPO 50V
C285		015-21470-01	CAP CER 0805 4P7+-1/4P NPO 50V
C287		020-09100-04	CAP ELE RA 100M 10V 6.3X9MM
C289		015-25470-08	CAP CER 0805 47N 10% X7R 50V
C291		014-08220-01	(L)CAP TANT 22UF10V276MSER
C293		015-27100-10	CAP CER 0805 1M+80-20% Y5V 16V
%C294		015-22470-01	CAP CER 0805 47P 5% NPO 50V
%C295		022-06470-02	CAP MYLAR 470N 10% 50V
C302		025-08100-02	CAP TANT BEAD 10M 10% 16V
C308		015-24100-08	CAP CER 0805 1N 10% X7R 50V
C310		015-24100-08	CAP CER 0805 1N 10% X7R 50V
C312		015-24100-08	CAP CER 0805 1N 10% X7R 50V
C313		015-06100-08	CAP CER 1206 100N 10% X7R 50V
C316		015-25470-08	CAP CER 0805 47N 10% X7R 50V
C317		015-23100-01	CAP CER 0805 100P 5% NPO 50V
C318		015-24100-08	CAP CER 0805 1N 10% X7R 50V
C320		015-24100-08	CAP CER 0805 1N 10% X7R 50V
C330A		015-24470-08	CAP CER 0805 4N7 10% X7R 50V
C330B		016-08100-01	CAP EL 6X4 10M 20% 16V
C332		015-24100-08	CAP CER 0805 1N 10% X7R 50V
C334		015-25100-08	CAP CER 0805 10N 10% X7R 50V
C336		015-24100-08	CAP CER 0805 1N 10% X7R 50V
C338		015-25220-08	CAP CER 0805 22N 10% X7R 50V
C340		015-24100-08	CAP CER 0805 1N 10% X7R 50V
C342		015-06100-08	CAP CER 1206 100N 10% X7R 50V
C343		015-24100-08	CAP CER 0805 1N 10% X7R 50V
C344		015-24100-08	CAP CER 0805 1N 10% X7R 50V
C345		015-24100-08	CAP CER 0805 1N 10% X7R 50V
C346		015-24100-08	CAP CER 0805 1N 10% X7R 50V
C347		015-25470-08	CAP CER 0805 47N 10% X7R 50V
C348		015-24100-08	CAP CER 0805 1N 10% X7R 50V
C349		015-24100-08	CAP CER 0805 1N 10% X7R 50V
C350		015-24100-08	CAP CER 0805 1N 10% X7R 50V
C353		015-24100-08	CAP CER 0805 1N 10% X7R 50V
C356		015-23150-01	CAP CER 0805 150P 5% NPO 50V
C359		015-24100-08	CAP CER 0805 1N 10% X7R 50V
C362		015-24100-08	CAP CER 0805 1N 10% X7R 50V
C365		015-22330-01	CAP CER 0805 33P 5% NPO 50V
C368		015-22820-01	CAP CER 0805 82P 5% NPO 50V
C370		015-24100-08	CAP CER 0805 1N 10% X7R 50V
C373		022-55470-10	CAP MYLAR AI 47N 5% 63V POTTED
C376		015-24100-08	CAP CER 0805 1N 10% X7R 50V
C379		015-24100-08	CAP CER 0805 1N 10% X7R 50V
C382		015-22470-01	CAP CER 0805 47P 5% NPO 50V
C385		020-07470-04	CAP ELE RA 4M7 25V 20%8X13 SOL
C388		015-24100-08	CAP CER 0805 1N 10% X7R 50V
C391		015-21820-01	CAP CER 0805 8P2+-1/4P NPO 50V
C394		015-04100-04	CAP CER 1206 1N 10% X7R 50V
C396		015-04100-04	CAP CER 1206 1N 10% X7R 50V
C403		015-22560-01	CAP CER 0805 56P 5% NPO 50V
C406		015-23180-01	CAP CER 0805 180P 5% NPO 50V
C409		015-05470-08	CAP CER 1206 47N 10% X7R 50V
C412		015-04100-05	CAP CER HIQ1210 1N 10% NPO 50V
C415		015-02820-02	CAP CER HIQ1210 82P 5% NPO200V
C418		015-02820-02	CAP CER HIQ1210 82P 5% NPO200V
C421		015-03180-02	CAP CER HIQ1210 180P 5%NPO100V
C424		015-24100-08	CAP CER 0805 1N 10% X7R 50V
C427		020-07470-04	CAP ELE RA 4M7 25V 20%8X13 SOL
C430		020-07470-04	CAP ELE RA 4M7 25V 20%8X13 SOL
C433		015-05470-08	CAP CER 1206 47N 10% X7R 50V
C436		015-03330-02	CAP CER HIQ1210 330P 5%NPO100V
C439		015-05470-08	CAP CER 1206 47N 10% X7R 50V
C442		015-02270-02	CAP CER HIQ1210 27P 5% NPO200V
C445		029-03100-02	CAP MICA 5 CASE 100P 5%
#C448	10	015-02390-02	CAP CER HIQ1210 39P 5% NPO200V
#C448	13	015-02390-02	CAP CER HIQ1210 39P 5% NPO200V
#C448	15	015-02390-02	CAP CER HIQ1210 39P 5% NPO200V
#C448	20	015-02270-02	CAP CER HIQ1210 27P 5% NPO200V
#C448	23	015-02270-02	CAP CER HIQ1210 27P 5% NPO200V
#C448	25	015-02270-02	CAP CER HIQ1210 27P 5% NPO200V
C454		015-04100-05	CAP CER HIQ1210 1N 10% NPO 50V
C457		015-21820-01	CAP CER 0805 8P2+-1/4P NPO 50V
C460		015-24100-08	CAP CER 0805 1N 10% X7R 50V
C463		015-24100-08	CAP CER 0805 1N 10% X7R 50V
C466		015-21820-01	CAP CER 0805 8P2+-1/4P NPO 50V
C469		015-24100-08	CAP CER 0805 1N 10% X7R 50V
C472		015-24100-08	CAP CER 0805 1N 10% X7R 50V
C475		015-24100-08	CAP CER 0805 1N 10% X7R 50V
C477		015-24100-08	CAP CER 0805 1N 10% X7R 50V
C495		015-24470-08	CAP CER 0805 4N7 10% X7R 50V
C503		015-24470-08	CAP CER 0805 4N7 10% X7R 50V
C505		015-06100-08	CAP CER 1206 100N 10% X7R 50V
C510		015-25220-08	CAP CER 0805 22N 10% X7R 50V
C513		015-25100-08	CAP CER 0805 10N 10% X7R 50V
C535		015-06100-08	CAP CER 1206 100N 10% X7R 50V
C550		014-07470-00	CAP TANT CHIP 4U7 3.5 X 2.8MM
C605		015-24100-08	CAP CER 0805 1N 10% X7R 50V
C610A		015-25100-08	CAP CER 0805 10N 10% X7R 50V
C610B		020-09100-04	CAP ELE RA 100M 10V 6.3X9MM
C611A		020-09100-04	CAP ELE RA 100M 10V 6.3X9MM
C611B		015-25100-08	CAP CER 0805 10N 10% X7R 50V
C623		015-24100-08	CAP CER 0805 1N 10% X7R 50V
C625		020-09470-07	CAPEL470M16V20%V 8*20 3.5L.ESR
C626		015-24470-08	CAP CER 0805 4N7 10% X7R 50V
C628		015-24100-08	CAP CER 0805 1N 10% X7R 50V
C630		015-06100-08	CAP CER 1206 100N 10% X7R 50V
C631A		015-06100-08	CAP CER 1206 100N 10% X7R 50V
C634		025-08100-02	CAP TANT BEAD 10M 10% 16V
C636		015-06100-08	CAP CER 1206 100N 10% X7R 50V
C638		015-24100-08	CAP CER 0805 1N 10% X7R 50V
C640		015-24100-08	CAP CER 0805 1N 10% X7R 50V
C655		015-24100-08	CAP CER 0805 1N 10% X7R 50V
C660		015-06100-08	CAP CER 1206 100N 10% X7R 50V
C665		020-58100-03	CAP ELE AI RDL 10M 50V 5X11MM
C670		025-07330-01	CAP TANT BEAD 3M3 35V
C673		015-24470-08	CAP CER 0805 4N7 10% X7R 50V
C677		020-07100-02	CAP ELE RA 1M 50V 5X11MM
C681		015-06100-08	CAP CER 1206 100N 10% X7R 50V
C684		025-08100-02	CAP TANT BEAD 10M 10% 16V
C687		015-24100-08	CAP CER 0805 1N 10% X7R 50V
C690		015-06100-08	CAP CER 1206 100N 10% X7R 50V
C693		025-08100-02	CAP TANT BEAD 10M 10% 16V
C700		015-06100-08	CAP CER 1206 100N 10% X7R 50V
C703		015-24100-08	CAP CER 0805 1N 10% X7R 50V
C705		015-21820-01	CAP CER 0805 8P2+-1/4P NPO 50V
C706		015-22470-01	CAP CER 0805 47P 5% NPO 50V
C708		014-07470-00	CAP TANT CHIP 4U7 3.5 X 2.8MM
C709		015-06100-08	CAP CER 1206 100N 10% X7R 50V
C710		015-25100-08	CAP CER 0805 10N 10% X7R 50V
C712		015-22470-01	CAP CER 0805 47P 5% NPO 50V
C720		015-06100-08	CAP CER 1206 100N 10% X7R 50V
C722		015-06100-08	CAP CER 1206 100N 10% X7R 50V
C724		014-08220-01	(L)CAP TANT 22UF10V276MSER
C725		014-08220-01	(L)CAP TANT 22UF10V276MSER
C726		015-25100-08	CAP CER 0805 10N 10% X7R 50V
C727		015-23220-01	CAP CER 0805 220P 5% NPO 50V
C729		015-23220-01	CAP CER 0805 220P 5% NPO 50V
%C733		015-23470-08	CAP CER 0805 470P 10% X7R 50V
C735		015-22470-01	CAP CER 0805 47P 5% NPO 50V
C736		015-22470-01	CAP CER 0805 47P 5% NPO 50V
C740A		015-24100-08	CAP CER 0805 1N 10% X7R 50V

 Copyright TEL

Ref	Var	IPN	Description
C740B		015-25100-08	CAP CER 0805 10N 10% X7R 50V
C741A		014-07470-00	CAP TANT CHIP 4U7 3.5 X 2.8MM
C741B		015-25100-08	CAP CER 0805 10N 10% X7R 50V
C742A		015-06100-08	CAP CER 1206 100N 10% X7R 50V
C742B		015-25100-08	CAP CER 0805 10N 10% X7R 50V
C743		015-22470-01	CAP CER 0805 47P 5% NPO 50V
C745		015-24100-08	CAP CER 0805 1N 10% X7R 50V
C750		025-08100-03	CAP 10M 35V 20% TANT 5MM L/S
C757		015-25100-08	CAP CER 0805 10N 10% X7R 50V
C759		015-25100-08	CAP CER 0805 10N 10% X7R 50V
C761		015-25100-08	CAP CER 0805 10N 10% X7R 50V
C762		014-08220-01	(L)CAP TANT 22UF10V276MSER
C764		015-25100-08	CAP CER 0805 10N 10% X7R 50V
C765		014-07470-00	CAP TANT CHIP 4U7 3.5 X 2.8MM
C767		015-24100-08	CAP CER 0805 1N 10% X7R 50V
C769		015-24100-08	CAP CER 0805 1N 10% X7R 50V
C770		014-08220-01	(L)CAP TANT 22UF10V276MSER
C772		014-08220-01	(L)CAP TANT 22UF10V276MSER
C774		022-06330-05	CAP METAL PPS 330N 10% 63V 5MM
C776		015-25150-08	CAP CER 0805 15N 10% X7R 50V
C782		015-24100-08	CAP CER 0805 1N 10% X7R 50V
C784		015-24100-08	CAP CER 0805 1N 10% X7R 50V
C786		015-06100-08	CAP CER 1206 100N 10% X7R 50V
C788		015-24100-08	CAP CER 0805 1N 10% X7R 50V
C790		015-24100-08	CAP CER 0805 1N 10% X7R 50V
C792		015-24100-08	CAP CER 0805 1N 10% X7R 50V
C810		015-25470-08	CAP CER 0805 47N 10% X7R 50V
C812		015-23100-01	CAP CER 0805 100P 5% NPO 50V
C813		015-24100-08	CAP CER 0805 1N 10% X7R 50V
C822		014-07470-00	CAP TANT CHIP 4U7 3.5 X 2.8MM
C823		015-25220-08	CAP CER 0805 22N 10% X7R 50V
C824		015-25470-08	CAP CER 0805 47N 10% X7R 50V
C826		015-23220-01	CAP CER 0805 220P 5% NPO 50V
C827		015-22330-01	CAP CER 0805 33P 5% NPO 50V
C828		015-25100-08	CAP CER 0805 10N 10% X7R 50V
C830		015-25470-08	CAP CER 0805 47N 10% X7R 50V
C838		020-09100-04	CAP ELE RA 100M 10V 6.3X9MM
C841		020-09100-04	CAP ELE RA 100M 10V 6.3X9MM
C844		015-25100-08	CAP CER 0805 10N 10% X7R 50V
C910		015-02150-02	CAP CER HIQ1210 15P 5% NPO200V
C910A		015-01220-06	CAP CER 1210 2P2 NPO500VGRM42
C920		015-02330-02	CAP CER HIQ1210 33P 5% NPO200V
C930		015-02270-02	CAP CER HIQ1210 27P 5% NPO200V
C940		015-02330-02	CAP CER HIQ1210 33P 5% NPO200V
C950		015-02150-02	CAP CER HIQ1210 15P 5% NPO200V
C950A		015-01220-06	CAP CER 1210 2P2 NPO500VGRM42
CV451		028-02200-01	AP TRM 4/20P N750 TOP ADJ
D111		001-00011-60	S) DIODE SR2607 -- USE MR750
D220		001-10000-99	S) DIODE SMD BAV99 D-SW SOT23
D230		001-00010-40	S) DIODE ZENER 33V 1.3W
D240		001-10000-56	S) DIODE SMD BAW56 D-SW SOT23
D250		001-10000-56	S) DIODE SMD BAW56 D-SW SOT23
D260		001-10000-56	S) DIODE SMD BAW56 D-SW SOT23
D270		001-10000-99	S) DIODE SMD BAV99 D-SW SOT23
D330		001-00015-69	S) DIODE ZEN 11V 0.5W LO CUR
D340		001-10000-18	S) DIODE SMD BAT18 S-SW SOT23
D350		001-10000-18	S) DIODE SMD BAT18 S-SW SOT23
D360		001-10000-18	S) DIODE SMD BAT18 S-SW SOT23
D410		001-00013-45	S) DIODE SCHTTKY 1SS97/2
D420		001-00013-45	S) DIODE SCHTTKY 1SS97/2
D610		001-10000-99	S) DIODE SMD BAV99 D-SW SOT23
D620		001-10000-70	S) DIODE SMD BAV70 D-SW SOT23
D630		001-10000-70	S) DIODE SMD BAV70 D-SW SOT23
D635		001-10065-00	DIODE BAT65 SCHOTTKEY SOD123
D640		001-10000-70	S) DIODE SMD BAV70 D-SW SOT23
D710		001-10000-99	S) DIODE SMD BAV99 D-SW SOT23
D720		001-10000-99	S) DIODE SMD BAV99 D-SW SOT23
D730		001-10065-00	DIODE BAT65 SCHOTTKEY SOD123
D740		001-10065-00	DIODE BAT65 SCHOTTKEY SOD123
D810		001-10065-00	DIODE BAT65 SCHOTTKEY SOD123
IC210		002-10003-24	S) IC SMD 324 4X O-AMP SO14
IC220		002-10126-70	S) IC SMD DS1267S10K 2XDIG POT
IC230		002-10003-24	S) IC SMD 324 4X O-AMP SO14
IC240		002-10040-53	S)MC14053B SMD BREAK B4 MAKE
IC250		002-00020-50	S) IC 4N25A OPTOCOUPLER
IC260		002-10003-24	S) IC SMD 324 4X O-AMP SO14
IC330		002-10003-58	S) IC SMD LM358 DUAL O-AMP
IC610		002-00014-58	S) IC 78L05 5V 100MA REG TO92
IC630		002-00014-62	S) IC 317L 100MA REG 3TER TO92
IC640		002-10003-58	S) IC SMD LM358 DUAL O-AMP
IC650		002-10012-32	SMD DS1232LPS-2 LP RESET&W-DOG
=IC700		539-00010-41	TCXO 12.8MHZ +-2.5PPM -30 +70C
IC710		002-74910-04	S) IC SMD 74HCU04 6X INV
IC720		002-74910-04	S) IC SMD 74HCU04 6X INV
IC730		002-10045-20	S) IC SMD 74HC4520T 2XCTR 4BIT
IC740		002-14519-10	S) IC MC145191F SMD SYNTH
IC750		002-10330-78	S) IC MC33078D 2X AMP LO NOISE
IC810		002-08951-20	S) IC AT89C51 PLCC44 MIC 12MHZ
IC820		002-12416-00	S)IC SMD AT24C16N-10SC EEPROM
IC830		002-10003-24	S) IC SMD 324 4X O-AMP SO14
L335		056-10330-02	(L) IND SMD 330NH
L340		056-10330-02	(L) IND SMD 330NH
L345		052-08135-25	COIL A/W 2.5T/3.5MM HOR 0.8MM
L350		052-08125-15	COIL A/W 1.5T/2.5MM HOR 0.8MM

Ref	Var	IPN	Description
L355		056-00021-01	IND FXD 1.5UH AX
L360		052-08140-35	COIL A/W 3.5T/4.0MM HOR 0.8MM
L365		052-08130-15	COIL A/W 1.5T/3.0MM HOR 0.8MM
L370		065-00010-08	BEAD FERR 4S3 3*0.7*10MM RED
L375		065-00010-04	BEAD FERR F8 4X2X5MM
L380		056-00021-01	IND FXD 1.5UH AX
L385		052-08145-35	COIL A/W 3.5/4.5MM HOR 0.8MM
L400		052-08135-15	COIL A/W 1.5T/3.5MM HOR 0.8MM
L410		065-00010-04	BEAD FERR F8 4X2X5MM
L415		065-00010-04	BEAD FERR F8 4X2X5MM
L420		065-00010-08	BEAD FERR 4S3 3*0.7*10MM RED
L425		052-08130-15	COIL A/W 1.5T/3.0MM HOR 0.8MM
L440		065-00010-08	BEAD FERR 4S3 3*0.7*10MM RED
L445		065-00010-04	BEAD FERR F8 4X2X5MM
L450		065-00010-01	BEAD FERR 3B 6 HOLE
L455		052-08140-15	COIL A/W 1.5T/4.0MM HOR 0.8MM
L465		052-08130-15	COIL A/W 1.5T/3.0MM HOR 0.8MM
L470		052-08140-25	COIL A/W 2.5T/4.0MM HOR 0.8MM
L475		056-00021-01	IND FXD 1.5UH AX
L480		052-08140-25	COIL A/W 2.5T/4.0MM HOR 0.8MM
L485		056-00021-01	IND FXD 1.5UH AX
L490		056-00021-01	IND FXD 1.5UH AX
L495		056-00021-01	IND FXD 1.5UH AX
L750		056-10068-00	IND FXD SMD 68NH 3.2*2.5*1.6
L910		052-08135-45	COIL A/W 4.5T/3.5MM HOR 0.8MM
L920		052-08155-25	COIL A/W 2.5T/5.5MM HOR 0.8MM
L930		052-08155-25	COIL A/W 2.5T/5.5MM HOR 0.8MM
L940		052-08135-45	COIL A/W 4.5T/3.5MM HOR 0.8MM
LED1		008-00013-32	S) LED 3 RED LO CURRENT NO MTG
LED2		008-00013-35	S) LED 3 GRN LO CURRENT NO MTG
PL100		240-00010-55	PLUG 15 W D RANGE W/W PNL MT
PL205		240-00020-67	HEADER 6W 2X3 PCB MTG STD
PL210		240-00020-67	HEADER 6W 2X3 PCB MTG STD
PL215		240-00020-44	HEADER 10W X2R PCB MTG 5*2
PL220		240-00020-67	HEADER 6W 2X3 PCB MTG STD
Q210		000-10008-48	S) XSTR SMD BCW60 NPN SOT23 SS
Q220		000-10008-17	S) XSTR SMD BC817-25 NPN SOT23
Q230		000-10008-48	S) XSTR SMD BCW60 NPN SOT23 SS
Q240		000-10008-48	S) XSTR SMD BCW60 NPN SOT23 SS
Q250		000-10008-17	S) XSTR SMD BC817-25 NPN SOT23
Q260		000-10008-57	S) XSTR SMD BCW70 PNP SOT23 SS
Q270		000-00011-91	S) XSTR BD139 NPN AF PWR TO126
Q305		000-10008-48	S) XSTR SMD BCW60 NPN SOT23 SS
Q310		000-10008-17	S) XSTR SMD BC817-25 NPN SOT23
Q315		000-00012-15	S) XSTR BD234 PNP AF PWR TO126
Q320		000-10008-07	S) XSTR SMD BC807 PNP SOT23 AF
Q325		000-10008-07	S) XSTR SMD BC807 PNP SOT23 AF
Q330		000-10008-57	S) XSTR SMD BCW70 PNP SOT23 SS
Q335		000-10008-07	S) XSTR SMD BC807 PNP SOT23 AF
Q340		000-10008-48	S) XSTR SMD BCW60 NPN SOT23 SS
Q345		000-10008-48	S) XSTR SMD BCW60 NPN SOT23 SS
Q350		000-10008-57	S) XSTR SMD BCW70 PNP SOT23 SS
Q355		000-10008-57	S) XSTR SMD BCW70 PNP SOT23 SS
Q360		000-10008-57	S) XSTR SMD BCW70 PNP SOT23 SS
Q365		000-00031-96	S) XSTR 3866 NPN T092 SWITCH
Q370		000-00022-30	S) XSTR 2N4427 NPN T039 VHF DR
Q415		000-00021-65	S) XSTR SD1012-9 NPN S-MTG VHF
Q425		000-00023-23	S) XSTR SRFH1001 NPN S-MTG 30W
Q510		000-10008-07	S) XSTR SMD BC807 PNP SOT23 AF
Q520		000-10008-07	S) XSTR SMD BC807 PNP SOT23 AF
Q530		000-10008-07	S) XSTR SMD BC807 PNP SOT23 AF
Q540		000-10008-07	S) XSTR SMD BC807 PNP SOT23 AF
Q550		000-10008-48	S) XSTR SMD BCW60 NPN SOT23 SS
Q610		000-10008-07	S) XSTR SMD BC807 PNP SOT23 AF
Q620		000-00012-15	S) XSTR BD234 PNP AF PWR TO126
Q630		000-50011-30	S) XSTR AI BC557B PNP TO92 AF
Q660		000-10008-17	S) XSTR SMD BC817-25 NPN SOT23
Q670		000-10008-57	S) XSTR SMD BCW70 PNP SOT23 SS
Q710		000-10008-48	S) XSTR SMD BCW60 NPN SOT23 SS
Q720		000-10008-57	S) XSTR SMD BCW70 PNP SOT23 SS
Q730		000-10008-48	S) XSTR SMD BCW60 NPN SOT23 SS
Q740		000-10008-57	S) XSTR SMD BCW70 PNP SOT23 SS
Q750		000-10008-07	S) XSTR SMD BC807 PNP SOT23 AF
Q760		000-10008-48	S) XSTR SMD BCW60 NPN SOT23 SS
Q770		000-10008-57	S) XSTR SMD BCW70 PNP SOT23 SS
Q775		000-10008-57	S) XSTR SMD BCW70 PNP SOT23 SS
Q780		000-10008-48	S) XSTR SMD BCW60 NPN SOT23 SS
Q785		000-10008-57	S) XSTR SMD BCW70 PNP SOT23 SS
Q790		000-10003-12	S) XSTR SMD BFR31 N JFET SOT23
Q795		000-10057-10	S) XSTR SMD BR571 NPN SOT23
Q810		000-10008-48	S) XSTR SMD BCW60 NPN SOT23 SS
Q820		000-10008-17	S) XSTR SMD BC817-25 NPN SOT23
Q830		000-10008-57	S) XSTR SMD BCW70 PNP SOT23 SS
Q840		000-10008-57	S) XSTR SMD BCW70 PNP SOT23 SS
Q850		000-10008-48	S) XSTR SMD BCW60 NPN SOT23 SS
Q860		000-10008-48	S) XSTR SMD BCW60 NPN SOT23 SS
R160		036-12100-00	RES M/F 0805 10E 5%
R201		036-13560-00	RES M/F 0805 560E 5%
R202		036-14100-00	RES M/F 0805 1K 5%
R204		036-14220-00	RES M/F 0805 2K2 5%
R205		036-13220-00	RES M/F 0805 220E 5%
R206		036-14100-00	RES M/F 0805 1K 5%
R207		036-14390-00	RES M/F 0805 3K9 5%
R208		036-13560-00	RES M/F 0805 560E 5%

Ref	Var	IPN	Description
R209		036-15100-00	RES M/F 0805 10K 5%
R210		036-14220-00	RES M/F 0805 2K2 5%
R212		036-16100-00	RES M/F 0805 100K 5%
R213		036-15100-00	RES M/F 0805 10K 5%
R214		036-14820-00	RES M/F 0805 8K2 5%
R215		036-16100-00	RES M/F 0805 100K 5%
R216		036-16100-00	RES M/F 0805 100K 5%
R217		036-14100-00	RES M/F 0805 1K 5%
R218		036-16150-00	RES M/F 0805 150K 5%
R219		036-14220-00	RES M/F 0805 2K2 5%
R221		036-14150-00	RES M/F 0805 1K5 5%
R223		036-17100-00	RES M/F 0805 1M 5%
R224		036-14680-00	RES M/F 0805 6K8 5%
R225		036-17100-00	RES M/F 0805 1M 5%
R226		036-15100-00	RES M/F 0805 10K 5%
R227		036-14220-00	RES M/F 0805 2K2 5%
R229		036-16470-00	RES M/F 0805 470K 5%
R230		036-16100-00	RES M/F 0805 100K 5%
R231		036-15100-00	RES M/F 0805 10K 5%
R232		036-16330-00	RES M/F 0805 330K 5%
R233		036-16100-00	RES M/F 0805 100K 5%
R235		036-14470-00	RES M/F 0805 4K7 5%
R237		036-15470-00	RES M/F 0805 47K 5%
R238		036-15470-00	RES M/F 0805 47K 5%
R239		036-14150-00	RES M/F 0805 1K5 5%
R241		036-14470-00	RES M/F 0805 4K7 5%
R242		036-14220-00	RES M/F 0805 2K2 5%
R244		036-15100-00	RES M/F 0805 10K 5%
R245		036-16100-00	RES M/F 0805 100K 5%
R247		036-15100-00	RES M/F 0805 10K 5%
R248		036-16100-00	RES M/F 0805 100K 5%
R249		036-16100-00	RES M/F 0805 100K 5%
R251		036-16100-00	RES M/F 0805 100K 5%
R253		036-16100-00	RES M/F 0805 100K 5%
R254		036-16100-00	RES M/F 0805 100K 5%
R255		036-15100-00	RES M/F 0805 10K 5%
R256		036-15470-00	RES M/F 0805 47K 5%
R257		036-16330-00	RES M/F 0805 330K 5%
R258		036-16150-00	RES M/F 0805 150K 5%
R259		036-15220-00	RES M/F 0805 22K 5%
R260		036-15470-00	RES M/F 0805 47K 5%
R262		036-15470-00	RES M/F 0805 47K 5%
R263		036-14470-00	RES M/F 0805 4K7 5%
&R264	10	036-15220-00	RES M/F 0805 22K 5%
&R264	13	036-15220-00	RES M/F 0805 22K 5%
&R264	15	036-15270-00	RES M/F 0805 27K 5%
&R264	20	036-15220-00	RES M/F 0805 22K 5%
&R264	23	036-15220-00	RES M/F 0805 22K 5%
&R264	25	036-15270-00	RES M/F 0805 27K 5%
&R265	10	036-15150-00	RES M/F 0805 15K 5%
&R265	13	036-15150-00	RES M/F 0805 15K 5%
&R265	15	036-15180-00	RES M/F 0805 18K 5%
&R265	20	036-15150-00	RES M/F 0805 15K 5%
&R265	23	036-15150-00	RES M/F 0805 15K 5%
&R265	25	036-15180-00	RES M/F 0805 18K 5%
&R266	10	036-15470-00	RES M/F 0805 47K 5%
&R266	13	036-15470-00	RES M/F 0805 47K 5%
&R266	15	036-15560-00	RES M/F 0805 56K 5%
&R266	20	036-15470-00	RES M/F 0805 47K 5%
&R266	23	036-15470-00	RES M/F 0805 47K 5%
&R266	25	036-15560-00	RES M/F 0805 56K 5%
R267		036-14220-00	RES M/F 0805 2K2 5%
R268		036-13100-00	RES M/F 0805 100E 5%
R269		036-15100-00	RES M/F 0805 10K 5%
R270		036-13470-00	RES M/F 0805 470E 5%
R271		036-16390-00	RES M/F 0805 390K 5%
R272		036-13560-00	RES M/F 0805 560E 5%
R273		036-15120-00	RES M/F 0805 12K 5%
R274		036-15150-00	RES M/F 0805 15K 5%
R275		036-14270-00	RES M/F 0805 2K7 5%
R277		036-16100-00	RES M/F 0805 100K 5%
R278		036-16120-00	RES M/F 0805 120K 5%
R279		036-17100-00	RES M/F 0805 1M 5%
R280		036-15100-00	RES M/F 0805 10K 5%
R282		036-15560-00	RES M/F 0805 56K 5%
R283		036-15560-00	RES M/F 0805 56K 5%
R284		036-17100-00	RES M/F 0805 1M 5%
R285		036-10000-00	RES M/F 0805 ZERO OHM
R286		036-14220-00	RES M/F 0805 2K2 5%
R287		036-15100-00	RES M/F 0805 10K 5%
R288		036-15150-00	RES M/F 0805 15K 5%
R289		036-16100-00	RES M/F 0805 100K 5%
R290		036-13560-00	RES M/F 0805 560E 5%
R291		036-10000-00	RES M/F 0805 ZERO OHM
R292		036-14470-00	RES M/F 0805 4K7 5%
R293		036-15470-00	RES M/F 0805 47K 5%
R294		036-14470-00	RES M/F 0805 4K7 5%
R295		036-14270-00	RES M/F 0805 2K7 5%
R296		036-14100-00	RES M/F 0805 1K 5%
R297		036-14560-00	RES M/F 0805 5K6 5%
%R298		036-16100-00	RES M/F 0805 100K 5%
R299		036-14270-00	RES M/F 0805 2K7 5%
R301		036-14470-00	RES M/F 0805 4K7 5%
R302		036-14100-00	RES M/F 0805 1K 5%
R303		036-15100-00	RES M/F 0805 10K 5%
R304		036-12100-00	RES M/F 0805 10E 5%
R307		036-16220-00	RES M/F 0805 220K 5%
R308		036-14470-00	RES M/F 0805 4K7 5%

Ref	Var	IPN	Description
R309		036-14470-00	RES M/F 0805 4K7 5%
R310		036-14220-00	RES M/F 0805 2K2 5%
R311		036-14470-00	RES M/F 0805 4K7 5%
R312		036-14100-00	RES M/F 0805 1K 5%
R313		036-15180-00	RES M/F 0805 18K 5%
R314		036-16330-00	RES M/F 0805 330K 5%
R315		036-15150-00	RES M/F 0805 15K 5%
R316		036-16220-00	RES M/F 0805 220K 5%
R317		036-16100-00	RES M/F 0805 100K 5%
R318		036-14470-00	RES M/F 0805 4K7 5%
R320		036-15560-00	RES M/F 0805 56K 5%
R321		036-15560-00	RES M/F 0805 56K 5%
R322		036-13220-00	RES M/F 0805 220E 5%
R323		036-16220-00	RES M/F 0805 220K 5%
R324		036-14220-00	RES M/F 0805 2K2 5%
R325		036-14100-00	RES M/F 0805 1K 5%
R326		036-12220-00	RES M/F 0805 22E 5%
R327		036-14100-00	RES M/F 0805 1K 5%
R328		036-13470-00	RES M/F 0805 470E 5%
R332		036-15220-00	RES M/F 0805 22K 5%
R334		036-15100-00	RES M/F 0805 10K 5%
R336		036-14100-00	RES M/F 0805 1K 5%
R338		036-14100-00	RES M/F 0805 1K 5%
R340		036-16100-00	RES M/F 0805 100K 5%
R342		036-15150-00	RES M/F 0805 15K 5%
R344		036-15470-00	RES M/F 0805 47K 5%
R346		036-16120-00	RES M/F 0805 120K 5%
R347		036-14470-00	RES M/F 0805 4K7 5%
R348		036-15100-00	RES M/F 0805 10K 5%
R349		036-15150-00	RES M/F 0805 15K 5%
R350		036-14100-00	RES M/F 0805 1K 5%
R351		036-15150-00	RES M/F 0805 15K 5%
R352		036-15150-00	RES M/F 0805 15K 5%
R353		036-15100-00	RES M/F 0805 10K 5%
R354		036-15100-00	RES M/F 0805 10K 5%
R355		036-15470-00	RES M/F 0805 47K 5%
R356		036-16220-00	RES M/F 0805 220K 5%
R357		036-15470-00	RES M/F 0805 47K 5%
R358		036-13100-00	RES M/F 0805 100E 5%
R359		030-53150-20	RES FILM AI 150E 5% 0.4W 4X1.6
R360		030-52390-20	RES FILM AI 39E 5% 0.4W 4X1.6
R362		030-53150-20	RES FILM AI 150E 5% 0.4W 4X1.6
R364		036-14150-00	RES M/F 0805 1K5 5%
R366		036-12470-00	RES M/F 0805 47E 5%
R368		036-15100-00	RES M/F 0805 10K 5%
R370		036-13560-00	RES M/F 0805 560E 5%
R372		036-14150-00	RES M/F 0805 1K5 5%
R374		036-13330-00	RES M/F 0805 330E 5%
R376		036-14100-00	RES M/F 0805 1K 5%
R378		030-53560-20	RES FILM AI 560E 5% 0.4W 4X1.6
R380		030-53180-20	RES FILM AI 180E 5% 0.4W 4X1.6
R382		030-53180-20	RES FILM AI 180E 5% 0.4W 4X1.6
R384		036-11330-00	RES M/F 0805 3E3 5%
R386		036-12470-00	RES M/F 0805 47E 5%
R388		030-53560-20	RES FILM AI 560E 5% 0.4W 4X1.6
R390		030-52180-20	RES FILM AI 18E 5% 0.4W 4X1.6
R392		030-53560-20	RES FILM AI 560E 5% 0.4W 4X1.6
R394		030-52180-20	RES FILM AI 18E 5% 0.4W 4X1.6
R396		030-53560-20	RES FILM AI 560E 5% 0.4W 4X1.6
R405		032-32100-00	RES M/F PWR 10E 5% 1W 10X4MM
R410		030-51330-20	RES FILM AI 3E3 5% 0.4W 4X1.6
R415		032-33150-00	RES M/F PWR 150E 5% 1W 12X4.5
R420		030-52100-20	RES FILM AI 10E 5% 0.4W 4X1.6
R425		030-52100-20	RES FILM AI 10E 5% 0.4W 4X1.6
R430		030-52100-20	RES FILM AI 10E 5% 0.4W 4X1.6
R435		032-33180-00	RES M/F PWR 180E 5% 1W 12X4.5
R440		036-14470-00	RES M/F 0805 4K7 5%
R445		036-13100-00	RES M/F 0805 100E 5%
R450		036-13100-00	RES M/F 0805 100E 5%
R455		036-14470-00	RES M/F 0805 4K7 5%
R460		045-04470-01	RES NTC 4K7 5% 5MM DISC
R502		036-13330-00	RES M/F 0805 330E 5%
R505		036-15150-00	RES M/F 0805 15K 5%
R510		036-13680-00	RES M/F 0805 680E 5%
R515		036-12560-00	RES M/F 0805 56E 5%
R520		036-16120-00	RES M/F 0805 120K 5%
R525		036-15470-00	RES M/F 0805 47K 5%
R530		036-15220-00	RES M/F 0805 22K 5%
R535		036-15100-00	RES M/F 0805 10K 5%
R540		036-14220-00	RES M/F 0805 2K2 5%
R545		036-14470-00	RES M/F 0805 4K7 5%
R550		036-14470-00	RES M/F 0805 4K7 5%
R555		036-14470-00	RES M/F 0805 4K7 5%
R560		036-14270-00	RES M/F 0805 2K7 5%
R609		036-14100-00	RES M/F 0805 1K 5%
R613		036-13560-00	RES M/F 0805 560E 5%
R615		036-13100-00	RES M/F 0805 100E 5%
R617		036-10000-00	RES M/F 0805 ZERO OHM
R619		032-31100-00	RES M/F PWR 1E0 5% 1W 12X4.5MM
R621		032-31100-00	RES M/F PWR 1E0 5% 1W 12X4.5MM
R625		036-14100-00	RES M/F 0805 1K 5%
R629		032-33270-00	RES M/F PWR 270E 5% 1W 12X4.5
R633		036-14680-00	RES M/F 0805 6K8 5%
R637		036-12220-00	RES M/F 0805 22E 5%
R641		036-14150-00	RES M/F 0805 1K5 5%
R645		036-13470-00	RES M/F 0805 470E 5%
R649		036-14470-00	RES M/F 0805 4K7 5%
R653		036-15100-00	RES M/F 0805 10K 5%

 Copyright TEL

Ref	Var	IPN	Description
R657		036-15100-00	RES M/F 0805 10K 5%
R661		036-15100-00	RES M/F 0805 10K 5%
R665		036-16100-00	RES M/F 0805 100K 5%
R669		036-15470-00	RES M/F 0805 47K 5%
R673		036-16100-00	RES M/F 0805 100K 5%
R677		036-15470-00	RES M/F 0805 47K 5%
R681		036-13100-00	RES M/F 0805 100E 5%
R685		036-15150-00	RES M/F 0805 15K 5%
R689		036-12100-00	RES M/F 0805 10E 5%
R693		036-16100-00	RES M/F 0805 100K 5%
R696		036-15560-00	RES M/F 0805 56K 5%
R701		036-12220-00	RES M/F 0805 22E 5%
R702		036-17100-00	RES M/F 0805 1M 5%
R703		036-17100-00	RES M/F 0805 1M 5%
R706		036-15150-00	RES M/F 0805 15K 5%
R708		036-16100-00	RES M/F 0805 100K 5%
R710		036-13100-00	RES M/F 0805 100E 5%
R711		036-13100-00	RES M/F 0805 100E 5%
R712		036-12100-00	RES M/F 0805 10E 5%
R713		036-12220-00	RES M/F 0805 22E 5%
%R715		036-14100-00	RES M/F 0805 1K 5%
R717		036-14270-00	RES M/F 0805 2K7 5%
R718		036-15560-00	RES M/F 0805 56K 5%
R719		036-15560-00	RES M/F 0805 56K 5%
R720		036-15390-00	RES M/F 0805 39K 5%
R721		036-15100-00	RES M/F 0805 10K 5%
R722		036-15100-00	RES M/F 0805 10K 5%
R723		036-14270-00	RES M/F 0805 2K7 5%
R725		036-15390-00	RES M/F 0805 39K 5%
%R726		036-13100-00	RES M/F 0805 100E 5%
R727		036-15100-00	RES M/F 0805 10K 5%
R728		036-15100-00	RES M/F 0805 10K 5%
R742		036-13150-00	RES M/F 0805 150E 5%
R743		036-13150-00	RES M/F 0805 150E 5%
R744		036-12220-00	RES M/F 0805 22E 5%
R746		036-12220-00	RES M/F 0805 22E 5%
R747		036-12220-00	RES M/F 0805 22E 5%
R748		036-15470-00	RES M/F 0805 47K 5%
R749		036-15470-00	RES M/F 0805 47K 5%
R750		036-12220-00	RES M/F 0805 22E 5%
R752		036-12220-00	RES M/F 0805 22E 5%
R753		036-17100-00	RES M/F 0805 1M 5%
R754		036-14100-00	RES M/F 0805 1K 5%
R756		036-16470-00	RES M/F 0805 470K 5%
R757		036-16470-00	RES M/F 0805 470K 5%
R758		036-14120-00	RES M/F 0805 1K2 5%
R759		036-13330-00	RES M/F 0805 330E 5%
R760		036-13180-00	RES M/F 0805 180E 5%
R762		036-13100-00	RES M/F 0805 100E 5%
R763		036-13100-00	RES M/F 0805 100E 5%
R765		036-13680-00	RES M/F 0805 680E 5%
R766		036-14100-00	RES M/F 0805 1K 5%
R767		036-13680-00	RES M/F 0805 680E 5%
R769		036-13180-00	RES M/F 0805 180E 5%
R771		036-14820-00	RES M/F 0805 8K2 5%
R772		036-15220-00	RES M/F 0805 22K 5%
R774		036-14820-00	RES M/F 0805 8K2 5%
R775		036-14560-00	RES M/F 0805 5K6 5%
R777		036-14220-00	RES M/F 0805 2K2 5%
R784		036-12680-00	RES M/F 0805 68E 5%
R785		036-14330-00	RES M/F 0805 3K3 5%
R786		036-12100-00	RES M/F 0805 10E 5%
R787		036-12100-00	RES M/F 0805 10E 5%
R790		036-13220-00	RES M/F 0805 220E 5%
R791		036-13100-00	RES M/F 0805 100E 5%
R792		036-14100-00	RES M/F 0805 1K 5%
R801		036-16150-00	RES M/F 0805 150K 5%
R802		036-15470-00	RES M/F 0805 47K 5%
R808		036-12100-00	RES M/F 0805 10E 5%
R809		036-14470-00	RES M/F 0805 4K7 5%
R810		036-14470-00	RES M/F 0805 4K7 5%
R811		036-14470-00	RES M/F 0805 4K7 5%
R812		036-14470-00	RES M/F 0805 4K7 5%
R813		036-14470-00	RES M/F 0805 4K7 5%
R815		036-15470-00	RES M/F 0805 47K 5%
R816		036-16150-00	RES M/F 0805 150K 5%
R818		036-14470-00	RES M/F 0805 4K7 5%
R819		036-14470-00	RES M/F 0805 4K7 5%
R821		036-15470-00	RES M/F 0805 47K 5%
R822		036-15470-00	RES M/F 0805 47K 5%
R824		036-14220-00	RES M/F 0805 2K2 5%
R825		036-14220-00	RES M/F 0805 2K2 5%
R826		036-14220-00	RES M/F 0805 2K2 5%
R827		036-14220-00	RES M/F 0805 2K2 5%
R828		036-14220-00	RES M/F 0805 2K2 5%
R829		036-14220-00	RES M/F 0805 2K2 5%
R830		036-14220-00	RES M/F 0805 2K2 5%
R831		036-14220-00	RES M/F 0805 2K2 5%
R832		036-14220-00	RES M/F 0805 2K2 5%
R833		036-14220-00	RES M/F 0805 2K2 5%
R835		036-14220-00	RES M/F 0805 2K2 5%
R836		036-14220-00	RES M/F 0805 2K2 5%
R837		036-14220-00	RES M/F 0805 2K2 5%
R840		036-14220-00	RES M/F 0805 2K2 5%
R841		036-14220-00	RES M/F 0805 2K2 5%
R842		036-14220-00	RES M/F 0805 2K2 5%
R843		036-14220-00	RES M/F 0805 2K2 5%
R845		036-13470-00	RES M/F 0805 470E 5%
R846		036-13470-00	RES M/F 0805 470E 5%
R847		036-13470-00	RES M/F 0805 470E 5%
R848		036-14470-00	RES M/F 0805 4K7 5%
R849		036-13470-00	RES M/F 0805 470E 5%
R850		036-13470-00	RES M/F 0805 470E 5%
R853		036-14470-00	RES M/F 0805 4K7 5%
R854		036-14470-00	RES M/F 0805 4K7 5%
R855		036-14470-00	RES M/F 0805 4K7 5%
R859		036-16150-00	RES M/F 0805 150K 5%
R861		036-16150-00	RES M/F 0805 150K 5%
R863		036-16150-00	RES M/F 0805 150K 5%
R865		036-16100-00	RES M/F 0805 100K 5%
R867		036-16100-00	RES M/F 0805 100K 5%
R871		036-15470-00	RES M/F 0805 47K 5%
R872		036-14470-00	RES M/F 0805 4K7 5%
R873		036-15330-00	RES M/F 0805 33K 5%
R874		036-14470-00	RES M/F 0805 4K7 5%
R875		036-15470-00	RES M/F 0805 47K 5%
R876		036-14470-00	RES M/F 0805 4K7 5%
R877		036-14470-00	RES M/F 0805 4K7 5%
R879		036-15100-00	RES M/F 0805 10K 5%
RV210		040-05100-23	POT 10K LOG PCB 15MM SLOT SFT
RV220		042-05470-06	RES PRE 47K CAR 6MM FLAT T/ADJ
RV310		042-04220-06	RES PRE 2K2 CAR 6MM FLAT
RV320		042-05100-06	RES PRE 10K CAR 6MM FLAT
RV330		042-06470-06	RES PRE 470/500K 25% 6MM T/ADJ
R330A		036-13390-00	RES M/F 0805 390E 5%
RV805		042-05220-07	RES PRE 22K CAR 6MM FLAT D/ADJ
SK205		240-02020-05	SKT STEREO PHONE JACK PCB MTG
SK310		240-02100-44	SKT COAX MINI JACK PCB MT ANG.
SK420		240-02100-44	SKT COAX MINI JACK PCB MT ANG.
SK501		240-04021-77	SKT JACK 1.3 PCB MT 64W
SK502		240-04021-77	SKT JACK 1.3 PCB MT 64W
SK503		240-04021-77	SKT JACK 1.3 PCB MT 64W
SK504		240-04021-77	SKT JACK 1.3 PCB MT 64W
SK505		240-04021-77	SKT JACK 1.3 PCB MT 64W
SK513		240-04021-77	SKT JACK 1.3 PCB MT 64W
SK522		240-04021-77	SKT JACK 1.3 PCB MT 64W
SK531		240-04021-77	SKT JACK 1.3 PCB MT 64W
SK532		240-04021-77	SKT JACK 1.3 PCB MT 64W
SK533		240-04021-77	SKT JACK 1.3 PCB MT 64W
SK534		240-04021-77	SKT JACK 1.3 PCB MT 64W
SK535		240-04021-77	SKT JACK 1.3 PCB MT 64W
SK805		240-10000-07	CONN SMD SKT 16W 2R M-MATCH
SK810		240-04020-42	SKT 44 PIN SMD PLCC
SW230		232-00010-26	SWITCH PUSH SPDT R-ANG PCB MTG
T210		053-00010-17	XFMR T4030 LINE MATCH POTCORE
T610		050-00016-50	COIL TAIT NO 650 455KHZ

T836 Mechanical & Miscellaneous Parts (220-01395-02)

IPN	Legend	Description
012-04150-01		CAP CER F/THRU 1N5 NO LEAD Fitted to D-range pins.
051-00006-02		SOLDER SPRING 1.3MM A4M1877 Support for front panel LED solder joints.
065-00010-13		BEAD FER 7D 1.9X0.9X3.8 Fitted to D-range pins.
200-00010-05		WIRE T/C 0.5 For ferrite beads.
201-00030-02		WIRE T/C 7/0.2 PVC RED Front panel LEDs.
201-00030-10		WIRE T/C 7/0.2 PVC BLACK Front panel LEDs.
206-00010-11		COAX 50 OHM RG316-U PTFE Connects SK310 to SK420.
209-00010-25		STRIP CU 3X0.35 SLOT CAR TRACK Soldered to printed inductor L950.
220-01176-03	1	PCB T83X VCO
220-01395-02	2	PCB T836 SERIES II
232-00020-26	3	BUTTON 232-00010-26 SWITCH
240-00010-55	28	PLUG 15 W D RANGE W/W PNL MT PL100.
240-00100-43		PLG COAX MINI PIN CRIMP 1.5D For coax connecting SK310 to SK420.
240-02100-06	4	SKT COAX N TYPE PNL MTG OP-TER
240-04020-62		SKT 2 W RECEP SHORTING LINK PL205/210/215/220.
303-11169-03	5	CHASSIS PAINTED T800 SERIES
303-23118-00	6	COVER A3M2247 D RANGE
303-50074-00	7	CLIP A3M2246 SPRING CLAMP
303-50078-00	8	CLIP A4M2630 SPR. CABLE CLAMP
308-01007-01	9	HANDLE BASE STATION SERIES II
308-13090-00	10	HSINK A4M2361 BRKT COPPER
312-01052-01	11	LID TOP PNTD A1M2364 T800
312-01053-01	12	LID BOTTOM PNTD A1M2364 T800
316-06621-00	13	PNL FRT TX T800 SERIES II
319-01152-00	14	SHIELD A3M2250 F/THRU MTG
345-00040-10	15	SCRW M3X6MM P/POZ ST BZ
349-00020-36	16	LIM)SCREW TT M3X8m PANTORX BLK
349-00020-43	17	SCRW T/T M4X12MM P/POZ BZ
349-00020-45	18	SCRW T/T M4X20MM P/POZ BZ
350-00016-42	19	SPACER 5MM HI 8MM ST 2.5MM HO
352-00010-08	20	NUT M3 COLD FORM HEX ST BZ
352-00010-29	21	NUT M4 NYLOC HEX
352-00010-35	22	NUT 8-32 UNC HEX XSTR MTG
353-00010-10	23	WSHR M3 FLAT 7MMX0.6MM ST BZ
353-00010-13	24	WSHR M3 S/PROOF INT BZ
353-00010-24	25	WSHR M4 FLAT ST BZ A4M1957

IPN	Legend	Description
362-00010-08		GASKET SIL INSUL TO-5 TO-39 Under Q370.
362-00010-23	26	GASKET SIL TO-220 CLIP MTG.
362-00010-33	27	GROMMET LED MTG 3MM
365-00011-53		LABEL 104X37MM
365-00100-09		LABEL WHITE VINYL 15X11MM S/A
365-00100-20		LABEL WHITE S/A 28X11MM
365-01541-00		LABEL TX/RX/EX TYPE APR/SER NO
399-00010-51		BAG PLASTIC 75X100MM
400-00020-07		SLEEVING 2MM SIL RUBBER
410-01081-01		CRT T800 SERIES II
410-01082-01		CRTN 10 T800 KIWI 423X410X360

 Copyright TEL

replace A4 pages C6.2.9/C6.2.10 with A3 pages C6.2.9/C6.2.10

replace A4 pages C6.2.9/C6.2.10 with A3 pages C6.2.9/C6.2.10

Copyright TEL

T836 Grid Reference Index (IPN 220-01395-02)

How To Use This Grid Reference Index

The first digit in the PCB layout reference is a "1" or "2", indicating the top or bottom side layout respectively, and the last two characters give the location of the component on that diagram.

The first digit in the circuit diagram reference is the sheet number, and the last two characters give the location of the component on that sheet.

Device	PCB	Circuit
C201	1:C1	2-B8
C202	1:C1	2-C8
C204	1:A2	2-E8
C205	1:A2	2-E8
C207	1:C7	2-B6
C209	1:C6	2-D6
C210	1:C7	2-H0
C211	1:B7	2-F8
C213	1:B6	2-G8
C215	1:B6	2-G8
C217	1:C6	2-H8
C219	1:C6	2-H7
C221	1:D5	2-G6
C223	1:C5	2-J6
C225	1:C3	2-K7
C227	1:B4	2-K7
C229	1:B3	2-L7
C230	1:B4	2-H0
C232	1:A4	2-M7
C233	1:A5	2-N7
C235	1:B5	2-K5
C237	1:C4	2-K5
C239	1:C4	2-L4
C241	1:B4	2-M6
C242	1:B3	2-L6
C243	1:B4	2-P6
C245	1:C5	2-A4
C247	1:D4	2-B4
C249	1:D4	2-C4
C251	1:C3	2-E4
C253	1:D3	2-E3
C255	1:D3	2-D2
C257	1:D3	2-F2
C259	1:C6	2-J2
C260	1:D8	2-G0
C261	1:C6	2-K2
C263	1:D6	2-L3
C265	1:D5	2-N4
C267	1:C8	2-P3
&C269	1:C8	2-P3
C271	1:C8	2-Q3
C273	1:C8	2-Q4
C275	1:D3	2-E1
C277	1:C4	2-G1
C279	1:B4	2-G1
C281	1:B5	2-J1
C283	1:B5	2-K0
C285	1:D7	2-L0
C287	1:C6	2-M1
C289	1:C8	2-N1
C291	1:D7	2-P1
C293	1:D7	2-Q1
%C294	1:D7	2-Q0
%C295	1:D6	2-Q0
C302	1:F7	3-C8
C308	1:F8	3-C6
C310	1:F8	3-D6
C312	1:F8	3-G7
C313	1:E9	3-H7

Device	PCB	Circuit
C314	1:E8	3-J8
C316	1:E8	3-K8
C317	1:F9	3-L7
C318	1:F9	3-M7
C320	1:F8	3-N8
C330A	1:F8	3-L0
C330B	1:F9	3-M0
C332	2:E4	3-B5
C334	2:E4	3-D4
C336	2:E4	3-D5
C338	2:E5	3-F5
C340	2:E5	3-F5
C342	2:E4	3-G6
C343	1:E7	3-K5
C344	1:E7	3-K5
C345	1:E8	3-K6
C346	1:E8	3-L6
C347	1:E8	3-M6
C348	1:E8	3-P6
C349	2:F4	3-C2
C350	2:F4	3-E3
C353	2:F4	3-D0
C356	2:E4	3-F1
C359	2:E5	3-G1
C362	2:F4	3-G2
C365	2:F4	3-G2
C368	2:F5	3-H2
C370	2:F5	3-K3
C373	1:E6	3-L4
C376	1:F8	3-M4
C379	2:F5	3-K3
C382	2:E5	3-L2
C385	1:F6	3-P4
C388	2:F7	3-Q4
C391	2:E6	3-P2
C394	2:E6	3-P3
C396	2:E6	3-R3
C403	2:H8	4-B4
C406	2:H8	4-C4
C409	2:J7	4-D5
C412	2:J7	4-D5
C415	2:K8	4-E4
C418	2:K7	4-E4
C421	2:K7	4-F4
C424	2:N7	4-E6
C427	1:N7	4-F6
C430	1:M7	4-F5
C433	2:M7	4-G5
C436	2:L7	4-G5
C439	2:L8	4-H5
C442	2:L8	4-H4
C445	2:L8	4-J4
#C448	2:M8	4-K4
C454	2:M8	4-L5
C457	2:M7	4-L5
C460	2:N7	4-N6
C463	2:M8	4-N6
C466	2:N8	4-N4
C469	2:N9	4-N3

Device	PCB	Circuit
C472	2:M8	4-P3
C475	2:J8	4-N8
C477	2:H8	4-P8
C495	1:G8	4-P1
C503	1:K6	5-L9
C505	1:K6	5-M6
C510	1:J5	5-C0
C513	1:H5	5-G2
C535	1:K5	5-M2
C550	1:K4	5-L0
C605	1:L6	6-D8
C610A	1:M5	6-F8
C610B	1:M5	6-G8
C611A	1:L5	6-H8
C611B	1:M5	6-J8
C623	1:M6	6-N8
C625	1:M6	6-Q8
C626	1:M6	6-R8
C628	1:M6	6-R8
C630	1:M5	6-K5
C631A	1:M5	6-M6
C634	1:N5	6-M4
C636	1:M5	6-M4
C638	1:M6	6-P5
C640	1:M5	6-R6
C655	1:M4	6-C1
C660	1:L5	6-K1
C665	1:L5	6-K1
C670	1:L6	6-L1
C673	1:L5	6-P2
C677	1:L6	6-P1
C681	1:M5	6-R3
C684	1:M5	6-R3
C687	1:L6	6-Q1
C690	1:L6	6-R1
C693	1:L6	6-R1
C700	1:K4	7-A8
C703	1:J3	7-B7
C705	1:J3	7-B7
C706	1:J2	7-B5
%C707	1:K4	7-C8
C708	1:J2	7-C9
C709	1:K4	7-D9
C710	1:J3	7-E8
C712	1:H2	7-E7
%C713	1:H2	7-E6
C720	1:J3	7-F8
C722	1:J4	7-G8
C724	1:J4	7-H6
C725	1:J4	7-J6
C726	1:K4	7-J6
C727	1:J3	7-J8
C729	1:H3	7-M8
%C733	1:J3	7-M5
C735	1:J2	7-A1
C736	1:J2	7-B1
C740A	1:H2	7-B4
C740B	1:H2	7-B3
C741A	1:H2	7-C4

Device	PCB	Circuit
C741B	1:G2	7-C3
C742A	1:H2	7-D4
C742B	1:H3	7-D3
C743	1:H2	7-B1
C745	1:G3	7-D1
C750	1:H4	7-Q7
C757	1:G4	7-F5
C759	1:G4	7-G4
C761	1:G3	7-J4
C762	1:G3	7-K4
C764	1:H3	7-J2
C765	1:G3	7-K2
C767	1:H3	7-K3
C769	1:H4	7-N4
C770	1:H4	7-N4
C772	1:G4	7-N2
C774	1:H4	7-P2
C776	1:H4	7-N1
C782	1:G2	7-N1
C784	1:G2	7-Q1
C786	1:G2	7-R1
C788	1:G3	7-P0
C790	1:G3	7-Q0
C792	1:G3	7-Q0
C810	1:L3	8-K8
C812	1:L2	8-F5
C813	1:K2	8-H5
C822	1:M2	8-B2
C823	1:M3	8-C2
C824	1:M2	8-C1
C826	1:N3	8-C0
C827	1:N3	8-D0
C828	1:N3	8-E0
C830	1:N3	8-R1
C838	1:N4	8-F0
C841	1:N2	8-K2
C844	1:M2	8-L2
C910	2:P8	9-E4
C920	2:P7	9-F4
C930	2:P7	9-G4
C940	2:P7	9-H4
C950	2:P6	9-J4
CV451	1:M8	4-K4
D111	1:P4	1-R1
%D205	1:B2	2-D9
%D210	1:B2	2-E9
D220	1:B4	2-P7
D220	1:B4	2-P6
D230	1:B7	2-R5
D240	1:D4	2-C4
D240	1:D4	2-B2
D250	1:D3	2-E2
D250	1:D3	2-D3
D260	1:C2	2-C2
D260	1:C2	2-C2
D270	1:D2	2-C1
D270	1:D2	2-C1

Copyright TEL

Device	PCB	Circuit
D330	1:E9	3-N0
D340	2:F4	3-D2
D350	2:F4	3-E2
D360	2:F4	3-E2
D410	1:M7	4-M5
D420	1:N8	4-N4
D610	1:N6	6-K6
D610	1:N6	6-L6
D620	1:N4	6-B1
D620	1:N4	6-B2
D630	1:M5	6-G2
D630	1:M5	6-G3
D635	1:M4	6-G3
D640	1:L5	6-M2
D640	1:L5	6-M1
D710	1:J3	7-L8
D710	1:J3	7-L8
D720	1:H3	7-P8
D720	1:H3	7-P8
D730	1:H3	7-H1
D740	1:H3	7-K2
D810	1:M2	8-B7
IC210	1:C7	2-H0
IC210	1:C7	2-Q0
IC210	1:C7	2-K2
IC210	1:C7	2-C6
IC210	1:C7	2-L1
IC220	1:D6	2-P0
IC220	1:D6	2-M3
IC220	1:D6	2-D5
IC230	1:B4	2-G0
IC230	1:B4	2-J0
IC230	1:B4	2-L5
IC230	1:B4	2-N6
IC230	1:B4	2-G1
IC240	1:D4	2-F3
IC250	1:D3	2-E1
IC260	1:D8	2-Q2
IC260	1:D8	2-F0
IC260	1:D8	2-Q3
IC260	1:D8	2-N3
IC260	1:D8	2-N0
IC330	1:F8	3-K8
IC330	1:F8	3-L0
IC330	1:F8	3-D6
IC610	1:M5	6-G8
IC630	1:N5	6-K5
IC640	1:M5	6-F1
IC640	1:M5	6-N6
IC640	1:M5	6-Q6
IC650	1:L5	6-F4
=IC700	1:K3	7-A8
IC710	1:J2	7-E8
IC710	1:J2	7-G0
IC710	1:J2	7-D6
IC710	1:J2	7-D7
IC710	1:J2	7-D6
IC710	1:J2	7-C6
IC710	1:J2	7-C6
IC720	1:J3	7-M7
IC720	1:J3	7-J0
IC720	1:J3	7-K7
IC720	1:J3	7-F8
IC720	1:J3	7-N7
IC720	1:J3	7-P6
IC720	1:J3	7-K0
IC730	1:J4	7-H8
IC730	1:J4	7-G7
IC740	1:H2	7-D1
IC750	1:H4	7-N3
IC750	1:H4	7-H5
IC750	1:H4	7-Q7
IC820	1:L4	8-N2
IC830	1:N3	8-J0
IC830	1:N3	8-Q1

Device	PCB	Circuit
IC830	1:N3	8-J0
IC830	1:N3	8-J1
IC830	1:N3	8-C0
L335	1:F4	3-E3
L340	1:E5	3-G2
L345	1:F5	3-H2
L350	1:F5	3-J2
L355	1:F5	3-K3
L360	1:F5	3-L3
L365	1:E5	3-L3
L370	1:E5	3-M2
L375	1:E6	3-M4
L380	1:F6	3-N4
L385	1:F6	3-P3
L400	1:H8	4-C4
L405	2:H8	4-C4
L410	1:H8	4-D4
L415	1:H8	4-D3
L420	1:J7	4-E6
L425	1:J7	4-E5
L430	2:K8	4-F4
L435	2:K8	4-F4
L440	1:J8	4-G4
L445	1:M7	4-H6
L450	1:L7	4-H5
L455	1:L7	4-H5
L460	2:L8	4-J5
L465	1:M8	4-J5
L470	1:M8	4-L5
L475	1:M8	4-N6
L480	1:N8	4-N4
L485	1:M9	4-N4
L490	1:J9	4-N8
L495	1:G8	4-N1
L750	1:G4	7-R0
L910	1:P8	9-E5
L920	1:P7	9-F5
L930	1:P7	9-G5
L940	1:P6	9-H5
L950	2:P7	9-G4
P100	1:Q6	1-R8
P150	1:P2	1-Q4
P160	1:P2	1-Q4
P170	1:P2	1-Q3
P204	1:D1	2-A8
P208	1:D1	2-A8
P210	1:D6	2-A7
P211	1:D5	2-A7
P212	1:D6	2-A6
P215	1:D4	2-A2
P217	1:D4	2-A2
P219	1:D2	2-A1
P225	1:D2	2-A0
P230	1:C5	2-B0
P231	1:D8	2-B0
P233	1:C1	2-R9
P235	1:C1	2-R9
P237	1:B7	2-R8
P239	1:C7	2-R8
P240	1:C7	2-R8
P243	1:B7	2-R7
P244	1:B7	2-R7
P245	1:B8	2-R6
P247	1:B8	2-R6
P248	1:B7	2-R6
P249	1:C7	2-R5
P251	1:C7	2-R5
P255	1:D5	2-R4
P257	1:C2	2-R4
P259	1:B8	2-R3
P261	1:B8	2-R3
P263	1:B2	2-R2
P265	1:C5	2-M0
P267	1:C8	2-N2

Device	PCB	Circuit
P269	1:D8	2-P2
P271	1:C9	2-N1
P273	1:D9	2-P0
P275	1:D7	2-Q0
P750	1:H4	7-R3
P805	1:M2	8-A7
P810	1:L3	8-A5
P820	1:L4	8-M8
P825	1:L4	8-M8
P830	1:L4	8-M8
P835	1:L4	8-M7
P840	1:L4	8-M7
PL100	1:P3	1-F0
PL205	1:C5	2-J8
PL210	1:C3	2-H4
PL215	1:C4	2-K3
PL220	1:C4	2-H2
Q210	1:C6	2-J8
Q220	1:B3	2-L7
Q230	1:A4	2-M8
Q240	1:B7	2-Q7
Q250	1:B7	2-R5
Q260	1:C4	2-F3
Q270	1:D2	2-D1
Q305	1:F8	3-G7
Q310	1:F9	3-M8
Q315	1:F8	3-P8
Q320	2:E5	3-A5
Q325	2:E4	3-C5
Q330	2:E4	3-D4
Q335	2:E4	3-E5
Q340	1:E7	3-H6
Q345	1:E7	3-J5
Q350	1:E8	3-K6
Q355	1:E8	3-M6
Q360	1:E8	3-P6
Q365	1:F5	3-K2
Q370	1:E5	3-N3
Q415	2:J8	4-E4
Q425	2:K8	4-H4
Q510	1:J5	5-D1
Q520	1:J5	5-H2
Q530	1:J5	5-H0
Q540	1:K5	5-L2
Q550	1:K5	5-L0
Q610	1:L6	6-E8
Q620	1:N6	6-P8
Q630	1:M6	6-P5
Q660	1:L5	6-N1
Q670	1:L6	6-Q2
Q710	1:J3	7-K8
Q720	1:J3	7-K8
Q730	1:H3	7-N8
Q740	1:H3	7-N8
Q750	1:G4	7-F3
Q760	1:H3	7-H3
Q770	1:H3	7-H1
Q775	1:H3	7-K3
Q780	1:H3	7-K3
Q785	1:H3	7-K2
Q790	1:H4	7-M3
Q795	1:G3	7-P0
Q810	1:M2	8-E7
Q820	1:L2	8-D5
Q830	1:L2	8-D5
Q840	1:L2	8-F5
Q850	1:M2	8-G5
Q860	1:L4	8-B3
%R150	1:P2	1-R4
R160	1:P2	1-R3
R201	1:B2	2-E9
R202	1:C1	2-F9
R204	1:C7	2-B6

Device	PCB	Circuit
R205	1:C7	2-D6
R206	1:B7	2-G8
R207	1:B6	2-G8
R208	1:B6	2-G8
R209	1:C6	2-H8
R210	1:B6	2-H7
R212	1:D4	2-F6
R213	1:C4	2-G6
R214	1:D4	2-G6
R215	1:C4	2-H6
R216	1:C3	2-K7
R217	1:A4	2-M8
R218	1:A4	2-N7
R219	1:B4	2-N8
R221	1:B7	2-R7
R223	1:B4	2-K6
R224	1:C4	2-K5
R225	1:B4	2-L5
R226	1:B4	2-L4
R227	1:B4	2-M4
R229	1:B4	2-M7
R230	1:B4	2-M6
R231	1:B4	2-M6
R232	1:B4	2-M5
R233	1:B4	2-M6
R235	1:B4	2-P6
R237	1:B7	2-Q7
R238	1:B7	2-R7
R239	1:B8	2-R6
R241	1:B8	2-Q6
R242	1:B7	2-Q5
R244	1:C6	2-A5
R245	1:D4	2-D4
R247	1:D3	2-E4
R248	1:C3	2-E3
R249	1:D4	2-F3
R251	1:C4	2-G4
R253	1:C6	2-J2
R254	1:C6	2-K3
R255	1:C7	2-K2
R256	1:D8	2-M3
R257	1:D8	2-N5
R258	1:D8	2-N4
R259	1:D5	2-P4
R260	1:D8	2-N4
R262	1:D8	2-N3
R263	1:C8	2-P3
&R264	1:C8	2-P3
&R265	1:C8	2-P3
&R266	1:C8	2-P3
R267	1:C8	2-R2
R268	1:D2	2-C0
R269	1:C2	2-C1
R270	1:C2	2-D1
R271	1:C3	2-E1
R272	1:C4	2-F2
R273	1:B5	2-G2
R274	1:C4	2-G1
R275	1:C4	2-H0
R277	1:B5	2-J1
R278	1:B5	2-J0
R279	1:B5	2-K0
R280	1:B5	2-K0
R282	1:D7	2-K1
R283	1:D7	2-L1
R284	1:D7	2-L0
R285	1:C8	2-M0
R286	1:C7	2-M0
R287	1:D9	2-M0
R288	1:C6	2-M2
R289	1:D9	2-M0
R290	1:C8	2-N2
R291	1:C8	2-N1
R292	1:D8	2-Q2
R293	1:D9	2-Q2
R294	1:D9	2-Q1

Copyright TEL

Device	PCB	Circuit
R295	1:D8	2-R1
R296	1:D6	2-P0
R297	1:D7	2-P1
%R298	1:D7	2-Q0
R299	1:C7	2-R0
R301	1:F8	3-A8
R302	1:F8	3-A8
R303	1:F8	3-B8
R304	1:F7	3-C9
R307	1:F8	3-D7
R308	1:F8	3-E7
R309	1:F8	3-F7
R310	1:F8	3-F7
R311	1:E8	3-G9
R312	1:E7	3-G8
R313	1:E8	3-G9
R314	1:E8	3-H8
R315	1:E8	3-H9
R316	1:E8	3-H8
R317	1:E8	3-H7
R318	1:E8	3-J8
R320	1:E8	3-J9
R321	1:E8	3-J9
R322	1:E8	3-J8
R323	1:E9	3-L8
R324	1:E9	3-L8
R325	1:F8	3-M8
R326	1:F8	3-N8
R327	1:F8	3-N7
R328	1:F8	3-P7
R332	2:E4	3-C5
R334	2:E4	3-D6
R336	2:E4	3-D4
R338	2:E4	3-D4
R340	2:E4	3-D4
R342	2:E4	3-F5
R344	2:E5	3-F5
R346	2:E5	3-F6
R347	2:E5	3-G5
R348	1:E8	3-G6
R349	1:E7	3-J6
R350	1:E7	3-K5
R351	1:E8	3-K5
R352	1:E8	3-L5
R353	1:E8	3-J6
R354	1:E8	3-L6
R355	1:E8	3-N6
R356	1:E8	3-N6
R357	1:E8	3-P6
R358	1:E8	3-P5
R359	1:F5	3-B2
R360	1:F4	3-C2
R362	1:F4	3-C2
R364	2:F4	3-D2
R366	2:F4	3-D1
R368	2:F4	3-D0
R370	2:F4	3-E1
R372	2:E5	3-G1
R374	2:F5	3-J2
R376	2:F5	3-J3
R378	1:F5	3-J3
R380	1:F5	3-J4
R382	1:F5	3-K4
R384	2:E6	3-L3
R386	2:E6	3-M2
R388	1:F6	3-M4
R390	1:E6	3-Q3
R392	1:E6	3-Q2
R394	1:E6	3-Q3
R396	1:E6	3-Q2
R405	1:H7	4-D4
R410	1:J7	4-C5
R415	1:J7	4-D5
R420	2:K8	4-G4
R425	1:M7	4-G5
R430	1:M7	4-G5

Device	PCB	Circuit
R435	2:K8	4-H5
R440	2:N7	4-M6
R445	2:N8	4-N5
R450	2:M8	4-M4
R455	2:N8	4-N3
R460	1:J9	4-M8
R502	1:K6	5-K9
R505	1:K6	5-L8
R510	1:K6	5-L7
R515	1:H6	5-J5
R520	1:J5	5-C1
R525	1:J5	5-D1
R530	1:J5	5-D0
R535	1:J5	5-E1
R540	1:K5	5-H2
R545	1:K5	5-J1
R550	1:K5	5-K2
R555	1:K5	5-K1
R560	1:K5	5-M0
R609	1:L6	6-B8
R613	1:L6	6-C8
R615	1:M5	6-F9
R617	1:M5	6-J8
R619	1:M6	6-L8
R621	1:M6	6-L8
R625	1:N6	6-L7
R629	1:M5	6-P6
R633	1:M5	6-Q8
R637	1:N5	6-K6
R641	1:N5	6-L4
R645	1:N5	6-L5
R649	1:M5	6-M5
R653	1:M5	6-Q4
R657	1:M5	6-D1
R661	1:M5	6-E3
R665	1:M5	6-E2
R669	1:M5	6-E2
R673	1:M5	6-E0
R677	1:M4	6-F4
R681	1:L5	6-L2
R685	1:L5	6-N2
R689	1:L6	6-Q3
R693	1:L6	6-Q1
R696	1:M6	6-Q1
R701	1:K4	7-A9
R702	1:K4	7-C9
R703	1:J3	7-C8
=R705	1:K3	7-A7
R706	1:J3	7-B6
R708	1:H3	7-C7
R710	1:H2	7-E7
R711	1:J2	7-B6
R712	1:J3	7-D9
R713	1:J4	7-F8
%R715	1:K4	7-H6
R717	1:J4	7-H7
R718	1:J4	7-H7
R719	1:J4	7-J6
R720	1:J3	7-K7
R721	1:J3	7-K9
R722	1:J3	7-K8
R723	1:H3	7-M7
R725	1:J4	7-N7
%R726	1:J3	7-N6
R727	1:H3	7-N9
R728	1:H3	7-N8
R742	1:H2	7-B4
R743	1:H2	7-C5
R744	1:G2	7-D4
R746	1:H3	7-E4
R747	1:H3	7-E5
R748	1:J2	7-A1
R749	1:J2	7-B1
R750	1:H4	7-Q7
R752	1:G4	7-F5
R753	1:G4	7-F3

Device	PCB	Circuit
R754	1:G3	7-F3
R756	1:G3	7-G5
R757	1:G4	7-G4
R758	1:H3	7-H4
R759	1:H3	7-J4
R760	1:H3	7-K4
R762	1:H3	7-K4
R763	1:H4	7-L4
R765	1:H3	7-H2
R766	1:G3	7-J3
R767	1:H3	7-K2
R769	1:H3	7-L3
R771	1:H4	7-M3
R772	1:G4	7-M2
R774	1:H4	7-M2
R775	1:H4	7-N2
R777	1:H4	7-R3
R784	1:G3	7-P1
R785	1:G3	7-Q1
R786	1:G2	7-Q1
R787	1:G2	7-R2
R790	1:G3	7-P0
R791	1:G3	7-Q0
R792	1:G3	7-Q0
R801	1:M2	8-D7
R802	1:M2	8-D7
R808	1:L2	8-B4
R809	1:L2	8-D5
R810	1:L2	8-D6
R811	1:L2	8-E6
R812	1:L2	8-D5
R813	1:L2	8-D4
R815	1:L2	8-F4
R816	1:L2	8-F4
R818	1:M2	8-F5
R819	1:M2	8-F5
R821	1:M4	8-B3
R822	1:M4	8-E3
R824	1:L4	8-L8
R825	1:L4	8-L8
R826	1:L4	8-L8
R827	1:L4	8-L7
R828	1:L4	8-L7
R829	1:L4	8-P9
R830	1:L3	8-P9
R831	1:L3	8-P9
R832	1:L3	8-P8
R833	1:L3	8-P8
R835	1:L3	8-P8
R836	1:L3	8-P8
R837	1:L3	8-P7
R840	1:L3	8-P7
R841	1:L3	8-P7
R842	1:L3	8-P6
R843	1:L3	8-P6
R845	1:M4	8-Q5
R846	1:K2	8-Q4
R847	1:K2	8-Q4
R848	1:L2	8-J4
R849	1:M4	8-Q3
R850	1:K2	8-Q4
R853	1:M4	8-N3
R854	1:M4	8-N3
R855	1:M2	8-B0
R859	1:N2	8-C1
R861	1:N2	8-D1
R863	1:N3	8-E1
R865	1:N4	8-E0
R867	1:N3	8-E1
R871	1:N3	8-G2
R872	1:M4	8-H1
R873	1:N3	8-G1
R874	1:N3	8-H0
R875	1:N3	8-G0
R876	1:N3	8-H0
R877	1:M2	8-K2

Device	PCB	Circuit
R879	1:N2	8-L3
R330A	1:F9	3-L0
RV210	1:B7	2-F9
RV220	1:A4	2-M6
RV310	1:F7	3-B7
RV320	1:E7	3-G9
RV330	1:F7	3-G8
RV805	1:N4	8-F1
SK205	1:B5	2-A5
SK310	1:E7	3-R3
SK420	1:H8	4-A4
SK501	1:G6	5-D6
SK502	1:G6	5-D5
SK503	1:G6	5-D4
SK504	1:G5	5-D3
SK505	1:G5	5-D2
SK513	1:H5	5-H3
SK522	1:H6	5-K5
SK531	1:K6	5-N6
SK532	1:K5	5-N5
SK533	1:K5	5-N4
SK534	1:K5	5-N3
SK535	1:K5	5-N2
=SK710	1:K3	7-A7
SK805	1:K3	8-Q9
SK805	1:K3	8-Q7
SK805	1:K3	8-Q5
SK805	1:K3	8-Q7
SK805	1:K3	8-Q8
SK805	1:K3	8-Q7
SK805	1:K3	8-Q8
SK805	1:K3	8-Q6
SK805	1:K3	8-Q8
SK805	1:K3	8-Q6
SK805	1:K3	8-Q6
SK805	1:K3	8-Q9
SK805	1:K3	8-Q6
SK805	1:K3	8-Q9
SK805	1:K3	8-Q7
SK805	1:K3	8-Q8
SK810	1:M3	8-H5
SL201	2:D1	2-B9
SL202	2:D1	2-B8
SL203	2:D2	2-B1
SL204	2:D2	2-B1
SL320	1:E4	3-E3
SL501	2:J5	5-F0
SL810	1:M2	8-C7
SW230	1:B8	2-B4
T210	1:B2	2-C8
T610	1:L5	6-N2
TP206	1:D5	2-H7
TP305	1:E4	3-E5
TP308	1:E5	3-G5
TP309	1:E8	3-R9
TP310	1:E8	3-R9
TP313	1:F8	3-C7
TP314	1:E8	3-F8
TP401	1:G7	4-E6
TP402	1:F7	3-A9
TP409	1:L9	4-P4
TP410	1:M8	4-N6
TP601	1:N5	6-K9
TP602	1:L6	6-R9
TP603	1:L5	6-J2
TP604	1:L5	6-M6
TP607	1:L4	6-J9
TP710	1:H4	7-H5
TP715	1:J2	7-C6

Copyright TEL

6.3 T837 Exciter PCB

This section contains the following information.

IPN	Section	Page
220-011390-02	Parts List	6.3.3
	Mechanical & Miscellaneous Parts	6.3.8
	Mechanical Assembly	6.3.9
	Grid Reference Index	6.3.11
	PCB Layout - Top Side	6.3.15
	PCB Layout - Bottom Side	6.3.16
	Test Points & Options Connections - Top & Bottom Side	6.3.17
	Exciter Overview Diagram	6.3.18
	Audio Processor Circuit Diagram	6.3.19
	Exciter Circuit Diagram	6.3.20
	VCO Section Circuit Diagram	6.3.22
	Regulators Circuit Diagram	6.3.23
	Synthesiser Circuit Diagram	6.3.24
	Microcontroller Circuit Diagram	6.3.25
	Harmonic Filter Circuit Diagram	6.3.26

Copyright TEL

T837 Parts List (IPN 220-01390-02)

How To Use This Parts List

The components listed in this parts list are divided into two main types: those with a circuit reference (e.g. C2, D1, R121, etc.) and those without (miscellaneous and mechanical).

Those with a circuit reference are grouped in alphabetical order and then in numerical order within each group. Each component entry comprises three or four columns: the circuit reference, variant (if applicable), IPN and description. A number in the variant column indicates that this is a variant component which is fitted only to the product type listed. Static sensitive devices are indicated by an (S) at the start of the description column.

The miscellaneous and mechanical section lists the variant and common parts in IPN order. Where possible, a number in the legend column indicates their position in the mechanical assembly drawing.

The Parts List Amendments box below lists component changes that took place after the parts list and diagrams in this section were compiled. These changes (e.g. value changes, added/deleted components, etc.) are listed by circuit reference in alphanumeric order and supersede the information given in the parts list or diagrams. Components without circuit references are listed in IPN order.

Parts List Amendments

&C269	T837-16-0000/837-26-0000:	changed from 1p5 (IPN 015-21150-01) to 4p7 (IPN 015-21470-01) for FCC Type Approval requirements (710655).
C289	T837-16-0000/837-26-0000:	changed from 47n (IPN 015-25470-08) to 68n (IPN 015-25680-08) for FCC Type Approval requirements (710655).
IC710	Changed from 74HCV04 (IPN 002-74910-04) to 74HC04 (IPN 002-74900-04) to increase the gain of the TCXO buffer (710312).	
L360	Changed from 3.5T/4.0mm (052-08140-35) to 3.5T/3.5mm (052-08135-35).	
L365	Changed from 1.5T/3.0 (IPN 052-08130-15) to 1.5T/3.5 (IPN 052-08135-15) to improve power output evenly at the top and bottom of the 136-174MHz frequency range (710333).	
L385	136-156MHz (-10, -13 & -15):	changed from 3.5T/4.0 (052-08140-35) to 3.5T/4.5 (IPN 052-08145-35) to improve the output power (710332).
R221, R239	Changed from 680Ω (036-13680-00) to 1k5 (036-14150-00)	To improve power at 174MHz (710028).
R235, R545	Changed from 2k2 (036-14220-00) to 4k7 (036-14470-00)	
R290	Changed from 560Ω (036-13560-00) to 680Ω (036-13680-00) to reduce the level of side bands generated (710028).	
R304	Changed from 15k (036-15150-00) to 2k7 (036-14270-00)	To improve power at 174MHz (710028).
R332	Changed from 22k (036-15220-00) to 47k (036-15470-00)	
R364, R372	Changed from 1k0 (036-14100-00) to 1k5 (036-14150-00)	
R368	Changed from 1k0 (036-14100-00) to 10k (036-15100-00)	
R677	Changed from 1k0 (036-14100-00) to 47k (036-15470-00)	
R713	Changed from 22Ω (IPN 036-12220-00) to 0Ω (IPN 036-10000-00) to improve hum & noise performance (710837/839/840/841).	
RV220	Changed to IPN 042-05470-07 (47k preset) because IPN 042-05470-06 no longer available (710793/96/97/98).	
303-11169-03	T800 chassis: replaced by 303-11169-04	New chassis and lid tooling introduced, incorporating mechanical improvements and better RF shielding (750027, 750028 & 750029). Note that the new lids should be used only with the new chassis.
312-01052-01	T800 top lid: replaced by 312-01052-02	
312-01053-01	T800 bottom lid: replaced by 312-01053-02	
362-00010-08	Silpad for Q370 replaced by Silpad IPN 362-01101-00 which needs no thermal paste (710608).	

Note: %D205 and %D210 are optional level limiting diodes for special applications.

=R705 (47 ohm) and =SK710 are fitted in place of =IC700 when an external frequency reference is used. These two components are supplied with the auxiliary D-range kits (T800-06-0000 & T800-06-0001).

Ref	Var	IPN	Description
C201		020-07470-92	CAP BI-P RA 4M7 50V 6X11 5 LS
C202		020-07470-92	CAP BI-P RA 4M7 50V 6X11 5 LS
C204		020-07470-92	CAP BI-P RA 4M7 50V 6X11 5 LS
C205		020-07470-92	CAP BI-P RA 4M7 50V 6X11 5 LS
C207		014-07470-00	CAP TANT CHIP 4U7 3.5 X 2.8MM
C209		015-25470-08	CAP CER 0805 47N 10% X7R 50V
C210		015-06100-08	CAP CER 1206 100N 10% X7R 50V
C211		015-06100-08	CAP CER 1206 100N 10% X7R 50V
C213		025-08100-02	CAP TANT BEAD 10M 10% 16V
C215		014-08220-01	(L)CAP TANT 22UF10V276MSER
C217		015-24220-08	CAP CER 0805 2N2 10% X7R 50V
C219		015-24100-08	CAP CER 0805 1N 10% X7R 50V
C221		014-08220-01	(L)CAP TANT 22UF10V276MSER
C223		015-06100-08	CAP CER 1206 100N 10% X7R 50V
C225		015-06100-08	CAP CER 1206 100N 10% X7R 50V
C227		015-06100-08	CAP CER 1206 100N 10% X7R 50V
C229		015-23150-01	CAP CER 0805 150P 5% NPO 50V
C230		015-06100-08	CAP CER 1206 100N 10% X7R 50V
C232		015-23150-01	CAP CER 0805 150P 5% NPO 50V
C233		020-08470-02	CAP ELE RA 47M 16V 6X11MM
C235		015-24100-08	CAP CER 0805 1N 10% X7R 50V
C237		020-07100-02	CAP ELE RA 1M 50V 5X11MM
C239		020-07470-92	CAP BI-P RA 4M7 50V 6X11 5 LS
C241		015-06100-08	CAP CER 1206 100N 10% X7R 50V
C242		025-08100-02	CAP TANT BEAD 10M 10% 16V
C243		015-24100-08	CAP CER 0805 1N 10% X7R 50V
C245		015-23150-01	CAP CER 0805 150P 5% NPO 50V
C247		015-23150-01	CAP CER 0805 150P 5% NPO 50V
C249		015-24100-08	CAP CER 0805 1N 10% X7R 50V
C251		015-24100-08	CAP CER 0805 1N 10% X7R 50V
C253		015-24100-08	CAP CER 0805 1N 10% X7R 50V
C255		015-24100-08	CAP CER 0805 1N 10% X7R 50V
C257		015-22470-01	CAP CER 0805 47P 5% NPO 50V
C259		015-25470-08	CAP CER 0805 47N 10% X7R 50V
C260		015-06100-08	CAP CER 1206 100N 10% X7R 50V
C261		014-07470-00	CAP TANT CHIP 4U7 3.5 X 2.8MM
C263		020-09100-04	CAP ELE RA 100M 10V 6.3X9MM
C265		020-07470-92	CAP BI-P RA 4M7 50V 6X11 5 LS
C267		015-24470-08	CAP CER 0805 4N7 10% X7R 50V
&C269	10	015-21150-01	CAP CER 0805 1P5+-1/4P NPO 50V
&C269	13	015-21150-01	CAP CER 0805 1P5+-1/4P NPO 50V
&C269	15	015-21470-01	CAP CER 0805 4P7+-1/4P NPO 50V
&C269	20	015-21150-01	CAP CER 0805 1P5+-1/4P NPO 50V
&C269	23	015-21150-01	CAP CER 0805 1P5+-1/4P NPO 50V
&C269	25	015-21470-01	CAP CER 0805 4P7+-1/4P NPO 50V
C271		015-22470-01	CAP CER 0805 47P 5% NPO 50V
C273		015-25470-08	CAP CER 0805 47N 10% X7R 50V
C275		015-23120-01	CAP CER 0805 120P 5% NPO 50V
C277		015-25100-08	CAP CER 0805 10N 10% X7R 50V
C279		015-24100-08	CAP CER 0805 1N 10% X7R 50V
C281		015-25220-08	CAP CER 0805 22N 10% X7R 50V
C283		015-21470-01	CAP CER 0805 4P7+-1/4P NPO 50V
C285		015-21470-01	CAP CER 0805 4P7+-1/4P NPO 50V
C287		020-09100-04	CAP ELE RA 100M 10V 6.3X9MM
C289		015-25470-08	CAP CER 0805 47N 10% X7R 50V
C291		014-08220-01	(L)CAP TANT 22UF10V276MSER
C293		015-27100-10	CAP CER 0805 1M+80-20% Y5V 16V
%C294		015-22470-01	CAP CER 0805 47P 5% NPO 50V
%C295		022-06470-02	CAP MYLAR 470N 10% 50V
C304		015-24470-08	CAP CER 0805 4N7 10% X7R 50V
C308		015-25100-08	CAP CER 0805 10N 10% X7R 50V
C312		015-24100-08	CAP CER 0805 1N 10% X7R 50V
C316		015-24100-08	CAP CER 0805 1N 10% X7R 50V
C317		015-23100-01	CAP CER 0805 100P 5% NPO 50V
C318		015-23100-01	CAP CER 0805 100P 5% NPO 50V
C320		015-24100-08	CAP CER 0805 1N 10% X7R 50V
C324		015-24100-08	CAP CER 0805 1N 10% X7R 50V
C330A		015-25100-08	CAP CER 0805 10N 10% X7R 50V
C330B		020-08100-04	CAP ELE RA 10M 16V 4X7MM
C332		015-24100-08	CAP CER 0805 1N 10% X7R 50V
C334		015-25100-08	CAP CER 0805 10N 10% X7R 50V
C336		015-24100-08	CAP CER 0805 1N 10% X7R 50V
C338		015-25220-08	CAP CER 0805 22N 10% X7R 50V
C340		015-24100-08	CAP CER 0805 1N 10% X7R 50V
C342		015-06100-08	CAP CER 1206 100N 10% X7R 50V
C344		015-24100-08	CAP CER 0805 1N 10% X7R 50V
C346		015-24100-08	CAP CER 0805 1N 10% X7R 50V
C349		015-24100-08	CAP CER 0805 1N 10% X7R 50V
C350		015-24100-08	CAP CER 0805 1N 10% X7R 50V
C353		015-24100-08	CAP CER 0805 1N 10% X7R 50V
C356		015-23150-01	CAP CER 0805 150P 5% NPO 50V
C359		015-24100-08	CAP CER 0805 1N 10% X7R 50V
C362		015-24100-08	CAP CER 0805 1N 10% X7R 50V
C365		015-22330-01	CAP CER 0805 33P 5% NPO 50V
C368		015-22820-01	CAP CER 0805 82P 5% NPO 50V
C370		015-24100-08	CAP CER 0805 1N 10% X7R 50V
C373		022-55470-10	CAP MYLAR AI 47N 5% 63V POTTED
C376		015-24100-08	CAP CER 0805 1N 10% X7R 50V
C379		015-24100-08	CAP CER 0805 1N 10% X7R 50V
C382		015-22470-01	CAP CER 0805 47P 5% NPO 50V
C385		020-07470-04	CAP ELE RA 4M7 25V 20%8X13 SOL
C388		015-24100-08	CAP CER 0805 1N 10% X7R 50V
C391		015-21820-01	CAP CER 0805 8P2+-1/4P NPO 50V
C394		015-04100-04	CAP CER 1206 1N 10% X7R 50V
C396		015-04100-04	CAP CER 1206 1N 10% X7R 50V
C399		015-24100-08	CAP CER 0805 1N 10% X7R 50V
C503		015-24470-08	CAP CER 0805 4N7 10% X7R 50V
C505		015-06100-08	CAP CER 1206 100N 10% X7R 50V
C510		015-25220-08	CAP CER 0805 22N 10% X7R 50V
C513		015-25100-08	CAP CER 0805 10N 10% X7R 50V
C535		015-06100-08	CAP CER 1206 100N 10% X7R 50V
C550		014-07470-00	CAP TANT CHIP 4U7 3.5 X 2.8MM
C605		015-24100-08	CAP CER 0805 1N 10% X7R 50V
C610A		015-25100-08	CAP CER 0805 10N 10% X7R 50V
C610B		020-09100-04	CAP ELE RA 100M 10V 6.3X9MM
C611A		020-09100-04	CAP ELE RA 100M 10V 6.3X9MM
C611B		015-25100-08	CAP CER 0805 10N 10% X7R 50V
C623		015-24100-08	CAP CER 0805 1N 10% X7R 50V
C625		020-09470-07	CAPEL470M16V20%V 8*20 3.5L.ESR
C626		015-24470-08	CAP CER 0805 4N7 10% X7R 50V
C628		015-24100-08	CAP CER 0805 1N 10% X7R 50V
C630		015-06100-08	CAP CER 1206 100N 10% X7R 50V
C631A		015-06100-08	CAP CER 1206 100N 10% X7R 50V
C634		025-08100-02	CAP TANT BEAD 10M 10% 16V
C636		015-06100-08	CAP CER 1206 100N 10% X7R 50V
C638		015-24100-08	CAP CER 0805 1N 10% X7R 50V
C640		015-24100-08	CAP CER 0805 1N 10% X7R 50V
C655		015-24100-08	CAP CER 0805 1N 10% X7R 50V
C660		015-06100-08	CAP CER 1206 100N 10% X7R 50V
C665		020-58100-03	CAP ELE AI RDL 10M 50V 5X11MM
C670		025-07330-01	CAP TANT BEAD 3M3 35V
C673		015-24470-08	CAP CER 0805 4N7 10% X7R 50V
C677		020-07100-02	CAP ELE RA 1M 50V 5X11MM
C681		015-06100-08	CAP CER 1206 100N 10% X7R 50V
C684		025-08100-02	CAP TANT BEAD 10M 10% 16V
C687		015-24100-08	CAP CER 0805 1N 10% X7R 50V
C690		015-06100-08	CAP CER 1206 100N 10% X7R 50V
C693		025-08100-02	CAP TANT BEAD 10M 10% 16V
C700		015-06100-08	CAP CER 1206 100N 10% X7R 50V
C703		015-24100-08	CAP CER 0805 1N 10% X7R 50V
C705		015-21820-01	CAP CER 0805 8P2+-1/4P NPO 50V
C706		015-22470-01	CAP CER 0805 47P 5% NPO 50V
C708		014-07470-00	CAP TANT CHIP 4U7 3.5 X 2.8MM
C709		015-06100-08	CAP CER 1206 100N 10% X7R 50V
C710		015-25100-08	CAP CER 0805 10N 10% X7R 50V
C712		015-22470-01	CAP CER 0805 47P 5% NPO 50V
C720		015-06100-08	CAP CER 1206 100N 10% X7R 50V
C722		015-06100-08	CAP CER 1206 100N 10% X7R 50V
C724		014-08220-01	(L)CAP TANT 22UF10V276MSER
C725		014-08220-01	(L)CAP TANT 22UF10V276MSER
C726		015-25100-08	CAP CER 0805 10N 10% X7R 50V
C727		015-23220-01	CAP CER 0805 220P 5% NPO 50V
C729		015-23220-01	CAP CER 0805 220P 5% NPO 50V
%C733		015-23470-08	CAP CER 0805 470P 10% X7R 50V
C735		015-22470-01	CAP CER 0805 47P 5% NPO 50V
C736		015-22470-01	CAP CER 0805 47P 5% NPO 50V
C740A		015-24100-08	CAP CER 0805 1N 10% X7R 50V
C740B		015-25100-08	CAP CER 0805 10N 10% X7R 50V
C741A		014-07470-00	CAP TANT CHIP 4U7 3.5 X 2.8MM
C741B		015-25100-08	CAP CER 0805 10N 10% X7R 50V
C742A		015-06100-08	CAP CER 1206 100N 10% X7R 50V
C742B		015-25100-08	CAP CER 0805 10N 10% X7R 50V
C743		015-22470-01	CAP CER 0805 47P 5% NPO 50V
C745		015-24100-08	CAP CER 0805 1N 10% X7R 50V
C750		025-08100-03	CAP 10M 35V 20% TANT 5MM L/S
C757		015-25100-08	CAP CER 0805 10N 10% X7R 50V
C759		015-25100-08	CAP CER 0805 10N 10% X7R 50V
C761		015-25100-08	CAP CER 0805 10N 10% X7R 50V
C762		014-08220-01	(L)CAP TANT 22UF10V276MSER
C764		015-25100-08	CAP CER 0805 10N 10% X7R 50V
C765		014-07470-00	CAP TANT CHIP 4U7 3.5 X 2.8MM
C767		015-24100-08	CAP CER 0805 1N 10% X7R 50V
C769		015-24100-08	CAP CER 0805 1N 10% X7R 50V
C770		014-08220-01	(L)CAP TANT 22UF10V276MSER
C772		014-08220-01	(L)CAP TANT 22UF10V276MSER
C774		022-06330-05	CAP METAL PPS 330N 10% 63V 5MM
C776		015-25150-08	CAP CER 0805 15N 10% X7R 50V
C782		015-24100-08	CAP CER 0805 1N 10% X7R 50V
C784		015-24100-08	CAP CER 0805 1N 10% X7R 50V
C786		015-06100-08	CAP CER 1206 100N 10% X7R 50V
C788		015-24100-08	CAP CER 0805 1N 10% X7R 50V
C790		015-24100-08	CAP CER 0805 1N 10% X7R 50V
C792		015-24100-08	CAP CER 0805 1N 10% X7R 50V
C810		015-25470-08	CAP CER 0805 47N 10% X7R 50V
C812		015-23100-01	CAP CER 0805 100P 5% NPO 50V
C813		015-24100-08	CAP CER 0805 1N 10% X7R 50V
C822		014-07470-00	CAP TANT CHIP 4U7 3.5 X 2.8MM
C823		015-25220-08	CAP CER 0805 22N 10% X7R 50V
C824		015-25470-08	CAP CER 0805 47N 10% X7R 50V
C826		015-23220-01	CAP CER 0805 220P 5% NPO 50V
C827		015-22330-01	CAP CER 0805 33P 5% NPO 50V
C828		015-25100-08	CAP CER 0805 10N 10% X7R 50V

Copyright TEL

Ref	Var	IPN	Description
C830		015-25470-08	CAP CER 0805 47N 10% X7R 50V
C838		020-09100-04	CAP ELE RA 100M 10V 6.3X9MM
C841		020-09100-04	CAP ELE RA 100M 10V 6.3X9MM
C844		015-25100-08	CAP CER 0805 10N 10% X7R 50V
C910		015-02120-06	CAP CER 1210 12P NPO500VGRM42
C920		015-02270-06	CAP CER 1210 27P NPO500VGRM42
C930		015-02120-06	CAP CER 1210 12P NPO500VGRM42
D111		001-00011-60	S) DIODE SR2607 -- USE MR750
D220		001-10000-99	S) DIODE SMD BAV99 D-SW SOT23
D230		001-00010-40	S) DIODE ZENER 33V 1.3W
D240		001-10000-56	S) DIODE SMD BAW56 D-SW SOT23
D250		001-10000-56	S) DIODE SMD BAW56 D-SW SOT23
D260		001-10000-56	S) DIODE SMD BAW56 D-SW SOT23
D270		001-10000-99	S) DIODE SMD BAV99 D-SW SOT23
D340		001-10000-18	S) DIODE SMD BAT18 S-SW SOT23
D350		001-10000-18	S) DIODE SMD BAT18 S-SW SOT23
D360		001-10000-18	S) DIODE SMD BAT18 S-SW SOT23
D610		001-10000-99	S) DIODE SMD BAV99 D-SW SOT23
D620		001-10000-70	S) DIODE SMD BAV70 D-SW SOT23
D630		001-10000-70	S) DIODE SMD BAV70 D-SW SOT23
D635		001-10065-00	DIODE BAT65 SCHOTTKEY SOD123
D640		001-10000-70	S) DIODE SMD BAV70 D-SW SOT23
D710		001-10000-99	S) DIODE SMD BAV99 D-SW SOT23
D720		001-10000-99	S) DIODE SMD BAV99 D-SW SOT23
D730		001-10065-00	DIODE BAT65 SCHOTTKEY SOD123
D740		001-10065-00	DIODE BAT65 SCHOTTKEY SOD123
D810		001-10065-00	DIODE BAT65 SCHOTTKEY SOD123
IC210		002-10003-24	S) IC SMD 324 4X O-AMP SO14
IC220		002-10126-70	S) IC SMD DS1267S10K 2XDIG POT
IC230		002-10003-24	S) IC SMD 324 4X O-AMP SO14
IC240		002-10040-53	S)MC14053B SMD BREAK B4 MAKE
IC250		002-00020-50	S) IC 4N25A OPTOCOUPLER
IC260		002-10003-24	S) IC SMD 324 4X O-AMP SO14
IC330		002-00012-40	S) IC 358 DUAL O-AMP
IC610		002-00014-58	S) IC 78L05 5V 100MA REG TO92
IC630		002-00014-62	S) IC 317L 100MA REG 3TER TO92
IC640		002-10003-58	S) IC SMD LM358 DUAL O-AMP
IC650		002-10012-32	SMD DS1232LPS-2 LP RESET&W-DOG
=IC700		539-00010-41	TCXO 12.8MHZ +-2.5PPM -30 +70C
IC710		002-74910-04	S) IC SMD 74HCU04 6X INV
IC720		002-74910-04	S) IC SMD 74HCU04 6X INV
IC730		002-10045-20	S) IC SMD 74HC4520T 2XCTR 4BIT
IC740		002-14519-10	S) IC MC145191F SMD SYNTH
IC750		002-10330-78	S) IC MC33078D 2X AMP LO NOISE
IC810		002-08951-20	S) IC AT89C51 PLCC44 MIC 12MHZ
IC820		002-12416-00	S)IC SMD AT24C16N-10SC EEPROM
IC830		002-10003-24	S) IC SMD 324 4X O-AMP SO14
LED1		008-00013-32	S) LED 3 RED LO CURRENT NO MTG
LED2		008-00013-35	S) LED 3 GRN LO CURRENT NO MTG
L335		056-00021-04	IND FXD 330NH AX
L340		056-00021-04	IND FXD 330NH AX
L345		052-08135-25	COIL A/W 2.5T/3.5MM HOR 0.8MM
L350		052-08125-15	COIL A/W 1.5T/2.5MM HOR 0.8MM
L355		056-00021-01	IND FXD 1.5UH AX
L360		052-08135-35	COIL A/W 3.5T/3.5MM HOR 0.8MM
L365		052-08130-15	COIL A/W 1.5T/3.0MM HOR 0.8MM
L370		065-00010-08	BEAD FERR 4S3 3X0.7X10MM RED
L375		065-00010-04	BEAD FERR F8 4X2X5MM
L380		056-00021-01	IND FXD 1.5UH AX
L385		052-08140-35	COIL A/W 3.5T/4.0MM HOR 0.8MM
L390		056-00021-04	IND FXD 330NH AX
L750		056-10068-00	IND FXD SMD 68NH 3.2*2.5*1.6
L910		052-08140-35	COIL A/W 3.5T/4.0MM HOR 0.8MM
L920		052-08140-35	COIL A/W 3.5T/4.0MM HOR 0.8MM
PL100		240-00010-55	PLUG 15 W D RANGE W/W PNL MT
PL205		240-00020-67	HEADER 6W 2X3 PCB MTG STD
PL210		240-00020-67	HEADER 6W 2X3 PCB MTG STD
PL215		240-00020-44	HEADER 10W X2R PCB MTG 5*2
PL220		240-00020-67	HEADER 6W 2X3 PCB MTG STD
Q210		000-10008-48	S) XSTR SMD BCW60 NPN SOT23 SS
Q220		000-10008-17	S) XSTR SMD BC817-25 NPN SOT23
Q230		000-10008-48	S) XSTR SMD BCW60 NPN SOT23 SS
Q240		000-10008-48	S) XSTR SMD BCW60 NPN SOT23 SS
Q250		000-10008-17	S) XSTR SMD BC817-25 NPN SOT23
Q260		000-10008-57	S) XSTR SMD BCW70 PNP SOT23 SS
Q270		000-00011-91	S) XSTR BD139 NPN AF PWR TO126
Q305		000-10008-48	S) XSTR SMD BCW60 NPN SOT23 SS
Q310		000-10008-48	S) XSTR SMD BCW60 NPN SOT23 SS
Q315		000-00012-15	S) XSTR BD234 PNP AF PWR TO126
Q320		000-10008-07	S) XSTR SMD BC807 PNP SOT23 AF
Q325		000-10008-07	S) XSTR SMD BC807 PNP SOT23 AF
Q330		000-10008-57	S) XSTR SMD BCW70 PNP SOT23 SS
Q335		000-10008-07	S) XSTR SMD BC807 PNP SOT23 AF
Q340		000-10008-48	S) XSTR SMD BCW60 NPN SOT23 SS
Q345		000-10008-48	S) XSTR SMD BCW60 NPN SOT23 SS
Q365		000-00031-96	S) XSTR 3866 NPN T092 SWITCH
Q370		000-00022-30	S) XSTR 2N4427 NPN T039 VHF DR
Q510		000-10008-07	S) XSTR SMD BC807 PNP SOT23 AF
Q520		000-10008-07	S) XSTR SMD BC807 PNP SOT23 AF
Q530		000-10008-07	S) XSTR SMD BC807 PNP SOT23 AF
Q540		000-10008-07	S) XSTR SMD BC807 PNP SOT23 AF
Q550		000-10008-48	S) XSTR SMD BCW60 NPN SOT23 SS
Q610		000-10008-07	S) XSTR SMD BC807 PNP SOT23 AF
Q620		000-00012-15	S) XSTR BD234 PNP AF PWR TO126
Q630		000-50011-30	S) XSTR AI BC557B PNP TO92 AF
Q660		000-10008-17	S) XSTR SMD BC817-25 NPN SOT23
Q670		000-10008-57	S) XSTR SMD BCW70 PNP SOT23 SS
Q710		000-10008-48	S) XSTR SMD BCW60 NPN SOT23 SS
Q720		000-10008-57	S) XSTR SMD BCW70 PNP SOT23 SS
Q730		000-10008-48	S) XSTR SMD BCW60 NPN SOT23 SS
Q740		000-10008-57	S) XSTR SMD BCW70 PNP SOT23 SS
Q750		000-10008-07	S) XSTR SMD BC807 PNP SOT23 AF
Q760		000-10008-48	S) XSTR SMD BCW60 NPN SOT23 SS
Q770		000-10008-57	S) XSTR SMD BCW70 PNP SOT23 SS
Q775		000-10008-57	S) XSTR SMD BCW70 PNP SOT23 SS
Q780		000-10008-48	S) XSTR SMD BCW60 NPN SOT23 SS
Q785		000-10008-57	S) XSTR SMD BCW70 PNP SOT23 SS
Q790		000-10003-12	S) XSTR SMD BFR31 N JFET SOT23
Q795		000-10057-10	S) XSTR SMD BR571 NPN SOT23
Q810		000-10008-48	S) XSTR SMD BCW60 NPN SOT23 SS
Q820		000-10008-17	S) XSTR SMD BC817-25 NPN SOT23
Q830		000-10008-57	S) XSTR SMD BCW70 PNP SOT23 SS
Q840		000-10008-57	S) XSTR SMD BCW70 PNP SOT23 SS
Q850		000-10008-48	S) XSTR SMD BCW60 NPN SOT23 SS
Q860		000-10008-48	S) XSTR SMD BCW60 NPN SOT23 SS
R160		036-12100-00	RES M/F 0805 10E 5%
R201		036-13560-00	RES M/F 0805 560E 5%
R202		036-14100-00	RES M/F 0805 1K 5%
R204		036-14220-00	RES M/F 0805 2K2 5%
R205		036-13220-00	RES M/F 0805 220E 5%
R206		036-14100-00	RES M/F 0805 1K 5%
R207		036-14390-00	RES M/F 0805 3K9 5%
R208		036-13560-00	RES M/F 0805 560E 5%
R209		036-15100-00	RES M/F 0805 10K 5%
R210		036-14220-00	RES M/F 0805 2K2 5%
R212		036-16100-00	RES M/F 0805 100K 5%
R213		036-15100-00	RES M/F 0805 10K 5%
R214		036-14820-00	RES M/F 0805 8K2 5%
R215		036-16100-00	RES M/F 0805 100K 5%
R216		036-16100-00	RES M/F 0805 100K 5%
R217		036-14100-00	RES M/F 0805 1K 5%
R218		036-16150-00	RES M/F 0805 150K 5%
R219		036-14220-00	RES M/F 0805 2K2 5%
R221		036-14150-00	RES M/F 0805 1K5 5%
R223		036-17100-00	RES M/F 0805 1M 5%
R224		036-14680-00	RES M/F 0805 6K8 5%
R225		036-17100-00	RES M/F 0805 1M 5%
R226		036-15100-00	RES M/F 0805 10K 5%
R227		036-14220-00	RES M/F 0805 2K2 5%
R229		036-16470-00	RES M/F 0805 470K 5%
R230		036-16100-00	RES M/F 0805 100K 5%
R231		036-15100-00	RES M/F 0805 10K 5%
R232		036-16330-00	RES M/F 0805 330K 5%
R233		036-16100-00	RES M/F 0805 100K 5%
R235		036-14470-00	RES M/F 0805 4K7 5%
R237		036-15470-00	RES M/F 0805 47K 5%
R238		036-15470-00	RES M/F 0805 47K 5%
R239		036-14150-00	RES M/F 0805 1K5 5%
R241		036-14470-00	RES M/F 0805 4K7 5%
R242		036-14220-00	RES M/F 0805 2K2 5%
R244		036-15100-00	RES M/F 0805 10K 5%
R245		036-16100-00	RES M/F 0805 100K 5%
R247		036-15100-00	RES M/F 0805 10K 5%
R248		036-16100-00	RES M/F 0805 100K 5%
R249		036-16100-00	RES M/F 0805 100K 5%
R251		036-16100-00	RES M/F 0805 100K 5%
R253		036-16100-00	RES M/F 0805 100K 5%
R254		036-16100-00	RES M/F 0805 100K 5%
R255		036-15100-00	RES M/F 0805 10K 5%
R256		036-15470-00	RES M/F 0805 47K 5%
R257		036-16330-00	RES M/F 0805 330K 5%
R258		036-16150-00	RES M/F 0805 150K 5%
R259		036-15220-00	RES M/F 0805 22K 5%
R260		036-15470-00	RES M/F 0805 47K 5%
R262		036-15470-00	RES M/F 0805 47K 5%
R263		036-14470-00	RES M/F 0805 4K7 5%
&R264	10	036-15220-00	RES M/F 0805 22K 5%
&R264	13	036-15220-00	RES M/F 0805 22K 5%
&R264	15	036-15270-00	RES M/F 0805 27K 5%
&R264	20	036-15220-00	RES M/F 0805 22K 5%
&R264	23	036-15220-00	RES M/F 0805 22K 5%
&R264	25	036-15270-00	RES M/F 0805 27K 5%
&R265	10	036-15150-00	RES M/F 0805 15K 5%
&R265	13	036-15150-00	RES M/F 0805 15K 5%
&R265	15	036-15180-00	RES M/F 0805 18K 5%
&R265	20	036-15150-00	RES M/F 0805 15K 5%
&R265	23	036-15150-00	RES M/F 0805 15K 5%
&R265	25	036-15180-00	RES M/F 0805 18K 5%
&R266	10	036-15470-00	RES M/F 0805 47K 5%
&R266	13	036-15470-00	RES M/F 0805 47K 5%
&R266	15	036-15560-00	RES M/F 0805 56K 5%
&R266	20	036-15470-00	RES M/F 0805 47K 5%
&R266	23	036-15470-00	RES M/F 0805 47K 5%
&R266	25	036-15560-00	RES M/F 0805 56K 5%
R267		036-14220-00	RES M/F 0805 2K2 5%
R268		036-13100-00	RES M/F 0805 100E 5%
R269		036-15100-00	RES M/F 0805 10K 5%
R270		036-13470-00	RES M/F 0805 470E 5%
R271		036-16390-00	RES M/F 0805 390K 5%

Ref	Var	IPN	Description
R272		036-13560-00	RES M/F 0805 560E 5%
R273		036-15120-00	RES M/F 0805 12K 5%
R274		036-15150-00	RES M/F 0805 15K 5%
R275		036-14270-00	RES M/F 0805 2K7 5%
R277		036-16100-00	RES M/F 0805 100K 5%
R278		036-16120-00	RES M/F 0805 120K 5%
R279		036-17100-00	RES M/F 0805 1M 5%
R280		036-15100-00	RES M/F 0805 10K 5%
R282		036-15560-00	RES M/F 0805 56K 5%
R283		036-15560-00	RES M/F 0805 56K 5%
R284		036-17100-00	RES M/F 0805 1M 5%
R285		036-10000-00	RES M/F 0805 ZERO OHM
R286		036-14220-00	RES M/F 0805 2K2 5%
R287		036-15100-00	RES M/F 0805 10K 5%
R288		036-15150-00	RES M/F 0805 15K 5%
R289		036-16100-00	RES M/F 0805 100K 5%
R290		036-13680-00	RES M/F 0805 680E 5%
R291		036-10000-00	RES M/F 0805 ZERO OHM
R292		036-14470-00	RES M/F 0805 4K7 5%
R293		036-15470-00	RES M/F 0805 47K 5%
R294		036-14470-00	RES M/F 0805 4K7 5%
R295		036-14270-00	RES M/F 0805 2K7 5%
R296		036-14100-00	RES M/F 0805 1K 5%
R297		036-14560-00	RES M/F 0805 5K6 5%
%R298		036-16100-00	RES M/F 0805 100K 5%
R299		036-14270-00	RES M/F 0805 2K7 5%
R302		036-15220-00	RES M/F 0805 22K 5%
R304		036-14270-00	RES M/F 0805 2K7 5%
R306		036-15100-00	RES M/F 0805 10K 5%
R308		036-16100-00	RES M/F 0805 100K 5%
R310		036-15220-00	RES M/F 0805 22K 5%
R312		036-14150-00	RES M/F 0805 1K5 5%
R314		036-13150-00	RES M/F 0805 150E 5%
R316		036-15100-00	RES M/F 0805 10K 5%
R318		036-14220-00	RES M/F 0805 2K2 5%
R320		036-14100-00	RES M/F 0805 1K 5%
R322		036-12220-00	RES M/F 0805 22E 5%
R324		036-13470-00	RES M/F 0805 470E 5%
R326		036-13470-00	RES M/F 0805 470E 5%
R328		036-13470-00	RES M/F 0805 470E 5%
R330		036-12220-00	RES M/F 0805 22E 5%
R332		036-15470-00	RES M/F 0805 47K 5%
R334		036-15100-00	RES M/F 0805 10K 5%
R336		036-14100-00	RES M/F 0805 1K 5%
R338		036-14100-00	RES M/F 0805 1K 5%
R340		036-16100-00	RES M/F 0805 100K 5%
R342		036-15150-00	RES M/F 0805 15K 5%
R344		036-15470-00	RES M/F 0805 47K 5%
R346		036-16120-00	RES M/F 0805 120K 5%
R348		036-14470-00	RES M/F 0805 4K7 5%
R350		036-14100-00	RES M/F 0805 1K 5%
R352		036-15150-00	RES M/F 0805 15K 5%
R354		036-15150-00	RES M/F 0805 15K 5%
R356		036-14100-00	RES M/F 0805 1K 5%
R359		030-53150-20	RES FILM AI 150E 5% 0.4W 4X1.6
R360		030-52390-20	RES FILM AI 39E 5% 0.4W 4X1.6
R362		030-53150-20	RES FILM AI 150E 5% 0.4W 4X1.6
R364		036-14150-00	RES M/F 0805 1K5 5%
R366		036-12470-00	RES M/F 0805 47E 5%
R368		036-15100-00	RES M/F 0805 10K 5%
R370		036-13560-00	RES M/F 0805 560E 5%
R372		036-14150-00	RES M/F 0805 1K5 5%
R374		036-13330-00	RES M/F 0805 330E 5%
R376		036-14100-00	RES M/F 0805 1K 5%
R378		030-53560-20	RES FILM AI 560E 5% 0.4W 4X1.6
R380		030-53180-20	RES FILM AI 180E 5% 0.4W 4X1.6
R382		030-53180-20	RES FILM AI 180E 5% 0.4W 4X1.6
R384		036-11330-00	RES M/F 0805 3E3 5%
R386		036-12470-00	RES M/F 0805 47E 5%
R388		030-53560-20	RES FILM AI 560E 5% 0.4W 4X1.6
R390		030-52120-20	RES M/F 12E 5% 4X1.6 0.2"
R392		030-53820-20	RES FILM AI 820E 5% 0.4W 4X1.6
R394		030-52120-20	RES M/F 12E 5% 4X1.6 0.2"
R396		030-53820-20	RES FILM AI 820E 5% 0.4W 4X1.6
R502		036-13330-00	RES M/F 0805 330E 5%
R505		036-15150-00	RES M/F 0805 15K 5%
R510		036-13680-00	RES M/F 0805 680E 5%
R515		036-12560-00	RES M/F 0805 56E 5%
R520		036-16120-00	RES M/F 0805 120K 5%
R525		036-15470-00	RES M/F 0805 47K 5%
R530		036-15220-00	RES M/F 0805 22K 5%
R535		036-15100-00	RES M/F 0805 10K 5%
R540		036-14220-00	RES M/F 0805 2K2 5%
R545		036-14470-00	RES M/F 0805 4K7 5%
R550		036-14470-00	RES M/F 0805 4K7 5%
R555		036-14470-00	RES M/F 0805 4K7 5%
R560		036-14270-00	RES M/F 0805 2K7 5%
R609		036-14100-00	RES M/F 0805 1K 5%
R613		036-13560-00	RES M/F 0805 560E 5%
R615		036-13100-00	RES M/F 0805 100E 5%
R617		036-10000-00	RES M/F 0805 ZERO OHM
R619		032-31100-00	RES M/F PWR 1E0 5% 1W 12X4.5MM
R621		032-31100-00	RES M/F PWR 1E0 5% 1W 12X4.5MM
R625		036-14100-00	RES M/F 0805 1K 5%
R629		032-33270-00	RES M/F PWR 270E 5% 1W 12X4.5
R633		036-14680-00	RES M/F 0805 6K8 5%
R637		036-12220-00	RES M/F 0805 22E 5%
R641		036-14150-00	RES M/F 0805 1K5 5%
R645		036-13470-00	RES M/F 0805 470E 5%
R649		036-14470-00	RES M/F 0805 4K7 5%
R653		036-15100-00	RES M/F 0805 10K 5%
R657		036-15100-00	RES M/F 0805 10K 5%
R661		036-15100-00	RES M/F 0805 10K 5%
R665		036-16100-00	RES M/F 0805 100K 5%
R669		036-15470-00	RES M/F 0805 47K 5%
R673		036-16100-00	RES M/F 0805 100K 5%
R677		036-15470-00	RES M/F 0805 47K 5%
R681		036-13100-00	RES M/F 0805 100E 5%
R685		036-15150-00	RES M/F 0805 15K 5%
R689		036-12100-00	RES M/F 0805 10E 5%
R693		036-16100-00	RES M/F 0805 100K 5%
R696		036-15560-00	RES M/F 0805 56K 5%
R701		036-12220-00	RES M/F 0805 22E 5%
R702		036-17100-00	RES M/F 0805 1M 5%
R703		036-17100-00	RES M/F 0805 1M 5%
R706		036-15150-00	RES M/F 0805 15K 5%
R708		036-16100-00	RES M/F 0805 100K 5%
R710		036-13100-00	RES M/F 0805 100E 5%
R711		036-13100-00	RES M/F 0805 100E 5%
R712		036-12100-00	RES M/F 0805 10E 5%
R713		036-12220-00	RES M/F 0805 22E 5%
%R715		036-14100-00	RES M/F 0805 1K 5%
R717		036-14270-00	RES M/F 0805 2K7 5%
R718		036-15560-00	RES M/F 0805 56K 5%
R719		036-15560-00	RES M/F 0805 56K 5%
R720		036-15390-00	RES M/F 0805 39K 5%
R721		036-15100-00	RES M/F 0805 10K 5%
R722		036-15100-00	RES M/F 0805 10K 5%
R723		036-14270-00	RES M/F 0805 2K7 5%
R725		036-15390-00	RES M/F 0805 39K 5%
%R726		036-13100-00	RES M/F 0805 100E 5%
R727		036-15100-00	RES M/F 0805 10K 5%
R728		036-15100-00	RES M/F 0805 10K 5%
R742		036-13150-00	RES M/F 0805 150E 5%
R743		036-13150-00	RES M/F 0805 150E 5%
R744		036-12220-00	RES M/F 0805 22E 5%
R746		036-12220-00	RES M/F 0805 22E 5%
R747		036-12220-00	RES M/F 0805 22E 5%
R748		036-15470-00	RES M/F 0805 47K 5%
R749		036-15470-00	RES M/F 0805 47K 5%
R750		036-12220-00	RES M/F 0805 22E 5%
R752		036-12220-00	RES M/F 0805 22E 5%
R753		036-17100-00	RES M/F 0805 1M 5%
R754		036-14100-00	RES M/F 0805 1K 5%
R756		036-16470-00	RES M/F 0805 470K 5%
R757		036-16470-00	RES M/F 0805 470K 5%
R758		036-14120-00	RES M/F 0805 1K2 5%
R759		036-13330-00	RES M/F 0805 330E 5%
R760		036-13180-00	RES M/F 0805 180E 5%
R762		036-13100-00	RES M/F 0805 100E 5%
R763		036-13100-00	RES M/F 0805 100E 5%
R765		036-13680-00	RES M/F 0805 680E 5%
R766		036-14100-00	RES M/F 0805 1K 5%
R767		036-13680-00	RES M/F 0805 680E 5%
R769		036-13180-00	RES M/F 0805 180E 5%
R771		036-14820-00	RES M/F 0805 8K2 5%
R772		036-15220-00	RES M/F 0805 22K 5%
R774		036-14820-00	RES M/F 0805 8K2 5%
R775		036-14560-00	RES M/F 0805 5K6 5%
R777		036-14220-00	RES M/F 0805 2K2 5%
R784		036-12680-00	RES M/F 0805 68E 5%
R785		036-14330-00	RES M/F 0805 3K3 5%
R786		036-12100-00	RES M/F 0805 10E 5%
R787		036-12100-00	RES M/F 0805 10E 5%
R790		036-13220-00	RES M/F 0805 220E 5%
R791		036-13100-00	RES M/F 0805 100E 5%
R792		036-14100-00	RES M/F 0805 1K 5%
R801		036-16150-00	RES M/F 0805 150K 5%
R802		036-15470-00	RES M/F 0805 47K 5%
R808		036-12100-00	RES M/F 0805 10E 5%
R809		036-14470-00	RES M/F 0805 4K7 5%
R810		036-14470-00	RES M/F 0805 4K7 5%
R811		036-14470-00	RES M/F 0805 4K7 5%
R812		036-14470-00	RES M/F 0805 4K7 5%
R813		036-14470-00	RES M/F 0805 4K7 5%
R815		036-15470-00	RES M/F 0805 47K 5%
R816		036-16150-00	RES M/F 0805 150K 5%
R818		036-14470-00	RES M/F 0805 4K7 5%
R819		036-14470-00	RES M/F 0805 4K7 5%
R821		036-15470-00	RES M/F 0805 47K 5%
R822		036-15470-00	RES M/F 0805 47K 5%
R824		036-14220-00	RES M/F 0805 2K2 5%
R825		036-14220-00	RES M/F 0805 2K2 5%
R826		036-14220-00	RES M/F 0805 2K2 5%
R827		036-14220-00	RES M/F 0805 2K2 5%
R828		036-14220-00	RES M/F 0805 2K2 5%
R829		036-14220-00	RES M/F 0805 2K2 5%
R830		036-14220-00	RES M/F 0805 2K2 5%
R831		036-14220-00	RES M/F 0805 2K2 5%
R832		036-14220-00	RES M/F 0805 2K2 5%
R833		036-14220-00	RES M/F 0805 2K2 5%
R835		036-14220-00	RES M/F 0805 2K2 5%
R836		036-14220-00	RES M/F 0805 2K2 5%
R837		036-14220-00	RES M/F 0805 2K2 5%
R840		036-14220-00	RES M/F 0805 2K2 5%
R841		036-14220-00	RES M/F 0805 2K2 5%

 Copyright TEL

Ref	Var	IPN	Description	Ref	Var	IPN	Description
R842		036-14220-00	RES M/F 0805 2K2 5%				
R843		036-14220-00	RES M/F 0805 2K2 5%				
R845		036-13470-00	RES M/F 0805 470E 5%				
R846		036-13470-00	RES M/F 0805 470E 5%				
R847		036-13470-00	RES M/F 0805 470E 5%				
R848		036-14470-00	RES M/F 0805 4K7 5%				
R849		036-13470-00	RES M/F 0805 470E 5%				
R850		036-13470-00	RES M/F 0805 470E 5%				
R853		036-14470-00	RES M/F 0805 4K7 5%				
R854		036-14470-00	RES M/F 0805 4K7 5%				
R855		036-14470-00	RES M/F 0805 4K7 5%				
R859		036-16150-00	RES M/F 0805 150K 5%				
R861		036-16150-00	RES M/F 0805 150K 5%				
R863		036-16150-00	RES M/F 0805 150K 5%				
R865		036-16100-00	RES M/F 0805 100K 5%				
R867		036-16100-00	RES M/F 0805 100K 5%				
R871		036-15470-00	RES M/F 0805 47K 5%				
R872		036-14470-00	RES M/F 0805 4K7 5%				
R873		036-15330-00	RES M/F 0805 33K 5%				
R874		036-14470-00	RES M/F 0805 4K7 5%				
R875		036-15470-00	RES M/F 0805 47K 5%				
R876		036-14470-00	RES M/F 0805 4K7 5%				
R877		036-14470-00	RES M/F 0805 4K7 5%				
R879		036-15100-00	RES M/F 0805 10K 5%				
RV210		040-05100-23	POT 10K LOG PCB 15MM SLOT SFT				
RV220		042-05470-06	RES PRE 47K CAR 6MM FLAT T/ADJ				
RV805		042-05220-07	RES PRE 22K CAR 6MM FLAT D/ADJ				
SK205		240-02020-05	SKT STEREO PHONE JACK PCB MTG				
SK310		240-02100-44	SKT COAX MINI JACK PCB MT ANG.				
SK420		240-02100-44	SKT COAX MINI JACK PCB MT ANG.				
SK501		240-04021-77	SKT JACK 1.3 PCB MT 64W				
SK502		240-04021-77	SKT JACK 1.3 PCB MT 64W				
SK503		240-04021-77	SKT JACK 1.3 PCB MT 64W				
SK504		240-04021-77	SKT JACK 1.3 PCB MT 64W				
SK505		240-04021-77	SKT JACK 1.3 PCB MT 64W				
SK513		240-04021-77	SKT JACK 1.3 PCB MT 64W				
SK522		240-04021-77	SKT JACK 1.3 PCB MT 64W				
SK531		240-04021-77	SKT JACK 1.3 PCB MT 64W				
SK532		240-04021-77	SKT JACK 1.3 PCB MT 64W				
SK533		240-04021-77	SKT JACK 1.3 PCB MT 64W				
SK534		240-04021-77	SKT JACK 1.3 PCB MT 64W				
SK535		240-04021-77	SKT JACK 1.3 PCB MT 64W				
SK805		240-10000-07	CONN SMD SKT 16W 2R M-MATCH				
SK810		240-04020-42	SKT 44 PIN SMD PLCC				
SW230		232-00010-26	SWITCH PUSH SPDT R-ANG PCB MTG				
T210		053-00010-17	XFMR T4030 LINE MATCH POTCORE				
T610		050-00016-50	COIL TAIT NO 650 455KHZ				

T837 Mechanical & Miscellaneous Parts (220-01390-02)

IPN	Legend	Description
012-04150-01		CAP CER F/THRU 1N5 NO LEAD Fitted to D-range pins.
051-00006-02		SOLDER SPRING 1.3MM A4M1877 Support for front panel LED solder joints.
065-00010-13		BEAD FER 7D 1.9X0.9X3.8 Fitted to D-range pins.
200-00010-05		WIRE T/C 0.5 For ferrite beads.
201-00030-02		WIRE T/C 7/0.2 PVC RED Front panel LEDs.
201-00030-10		WIRE T/C 7/0.2 PVC BLACK Front panel LEDs.
206-00010-11		COAX 50 OHM RG316-U PTFE Connects SK310 to SK420.
220-01176-03	1	PCB T83X VCO
220-01390-02	2	PCB T837 EX SERIES II
232-00020-26	3	BUTTON 232-00010-26 SWITCH
240-00010-55	25	PLUG 15 W D RANGE W/W PNL MT PL100.
240-00100-43		PLG COAX MINI PIN CRIMP 1.5D For coax connecting SK310 to SK420.
240-02100-06	4	SKT COAX N TYPE PNL MTG OP-TER
240-04020-62		SKT 2 W RECEP SHORTING LINK PL205/210/215/220.
303-11169-03	5	CHASSIS PAINTED T800 SERIES
303-23118-00	6	COVER A3M2247 D RANGE
303-50074-00	7	CLIP A3M2246 SPRING CLAMP
303-50078-00	8	CLIP A4M2630 SPR. CABLE CLAMP
308-01007-01	9	HANDLE BASE STATION SERIES II
312-01052-01	10	LID TOP PNTD A1M2364 T800
312-01053-01	11	LID BOTTOM PNTD A1M2364 T800
316-06619-00	12	PNL FRT EX NO EX OUT SER II
319-01152-00	13	SHIELD A3M2250 F/THRU MTG
345-00040-10	14	SCRW M3X6MM P/POZ ST BZ
349-00020-36	15	LIM)SCREW TT M3X8m PANTORX BLK
349-00020-43	16	SCRW T/T M4X12MM P/POZ BZ
349-00020-45	17	SCRW T/T M4X20MM P/POZ BZ
350-00016-42	18	SPACER 5MM HI 8MM ST 2.5MM HO
352-00010-08	19	NUT M3 COLD FORM HEX ST BZ
352-00010-29	20	NUT M4 NYLOC HEX
353-00010-10	21	WSHR M3 FLAT 7MMX0.6MM ST BZ
353-00010-13	22	WSHR M3 S/PROOF INT BZ
362-00010-08		GASKET SIL INSUL TO-5 TO-39 Under Q370.
362-00010-23	23	GASKET SIL TO-220 CLIP MTG.
362-00010-33	24	GROMMET LED MTG 3MM
365-00011-53		LABEL 104X37MM
365-00100-09		LABEL WHITE VINYL 15X11MM S/A
365-00100-20		LABEL WHITE S/A 28X11MM
365-01541-00		LABEL TX/RX/EX TYPE APR/SER NO
400-00020-07		SLEEVING 2MM SIL RUBBER
410-01081-01		CRT T800 SERIES II
410-01082-01		CRTN 10 T800 KIWI 423X410X360

 Copyright TEL

replace A4 pages C6.3.9/C6.3.10 with A3 pages C6.3.9/C6.3.10

replace A4 pages C6.3.9/C6.3.10 with A3 pages C6.3.9/C6.3.10

Copyright TEL

T837 Grid Reference Index (IPN 220-01390-02)

How To Use This Grid Reference Index

The first digit in the PCB layout reference is a "1" or "2", indicating the top or bottom side layout respectively, and the last two characters give the location of the component on that diagram.

The first digit in the circuit diagram reference is the sheet number, and the last two characters give the location of the component on that sheet.

Device	PCB	Circuit
C201	1:C1	2-B8
C202	1:C1	2-C8
C204	1:A2	2-E8
C205	1:A2	2-E8
C207	1:C7	2-B6
C209	1:C6	2-D6
C210	1:C7	2-H0
C211	1:B7	2-F8
C213	1:B6	2-G8
C215	1:B6	2-G8
C217	1:C6	2-H8
C219	1:C6	2-H7
C221	1:D5	2-G6
C223	1:C5	2-J6
C225	1:C3	2-K7
C227	1:B4	2-K7
C229	1:B3	2-L7
C230	1:B4	2-H0
C232	1:A4	2-M7
C233	1:A5	2-N7
C235	1:B5	2-K5
C237	1:C4	2-K5
C239	1:C4	2-L4
C241	1:B4	2-M6
C242	1:B3	2-L6
C243	1:B4	2-P6
C245	1:C5	2-A4
C247	1:D4	2-B4
C249	1:D4	2-C4
C251	1:C3	2-E4
C253	1:D3	2-E3
C255	1:D3	2-D2
C257	1:D3	2-F2
C259	1:C6	2-J2
C260	1:D8	2-G0
C261	1:C6	2-K2
C263	1:D6	2-L3
C265	1:D5	2-N4
C267	1:C8	2-P3
&C269	1:C8	2-P3
C271	1:C8	2-Q3
C273	1:C8	2-Q4
C275	1:D3	2-E1
C277	1:C4	2-G1
C279	1:B4	2-G1
C281	1:B5	2-J1
C283	1:B5	2-K0
C285	1:D7	2-L0
C287	1:C6	2-M1
C289	1:C8	2-N1
C291	1:D7	2-P1
C293	1:D7	2-Q1
%C294	1:D7	2-Q0
%C295	1:D6	2-Q0
C304	2:F7	3-A8
C308	2:F7	3-C8
C312	2:F7	3-D8
C316	2:E8	3-D9
C317	2:F8	3-E8

Device	PCB	Circuit
C318	2:F8	3-F9
C320	2:F7	3-G8
C324	2:F8	3-H9
C330A	2:F8	3-N8
C330B	1:F8	3-N8
C332	2:E4	3-B5
C334	2:E4	3-D4
C336	2:E4	3-D6
C338	2:E5	3-F5
C340	2:E5	3-F5
C342	2:E4	3-G6
C344	2:E5	3-J5
C346	2:E6	3-J6
C349	2:F4	3-C2
C350	2:F4	3-E3
C353	2:F4	3-D0
C356	2:E4	3-F1
C359	2:E5	3-F1
C362	2:F4	3-G2
C365	2:F4	3-G2
C368	2:F5	3-H2
C370	2:F5	3-K3
C373	1:E6	3-L4
C376	2:F8	3-L4
C379	2:F5	3-K3
C382	2:E5	3-L2
C385	1:F6	3-P4
C388	2:F7	3-P4
C391	2:E6	3-P2
C394	2:E6	3-P3
C396	2:E6	3-Q3
C399	2:E5	3-R4
C503	1:K6	5-L9
C505	1:K6	5-M6
C510	1:J5	5-C0
C513	1:H5	5-G2
C535	1:K5	5-M2
C550	1:K4	5-L0
C605	1:L6	6-D8
C610A	1:M5	6-F8
C610B	1:M5	6-G8
C611A	1:L5	6-H8
C611B	1:M5	6-J8
C623	1:M6	6-N8
C625	1:M6	6-Q8
C626	1:M6	6-R8
C628	1:M6	6-R8
C630	1:M5	6-K5
C631A	1:M5	6-M6
C634	1:N5	6-M4
C636	1:M5	6-M4
C638	1:M6	6-P5
C640	1:M5	6-R6
C655	1:M4	6-C1
C660	1:L5	6-K1
C665	1:L5	6-K1
C670	1:L6	6-L1
C673	1:L5	6-P2
C677	1:L6	6-P1

Device	PCB	Circuit
C681	1:M5	6-R3
C684	1:M5	6-R3
C687	1:L6	6-Q1
C690	1:L6	6-R1
C693	1:L6	6-R1
C700	1:K4	7-A8
C703	1:J3	7-B7
C705	1:J3	7-B7
C706	1:J2	7-B5
%C707	1:K4	7-C8
C708	1:J2	7-C9
C709	1:K4	7-D9
C710	1:J3	7-E8
C712	1:H2	7-E7
%C713	1:H2	7-E6
C720	1:J3	7-F8
C722	1:J4	7-G8
C724	1:J4	7-H6
C725	1:J4	7-J6
C726	1:K4	7-J6
C727	1:J3	7-J8
C729	1:H3	7-M8
%C733	1:J3	7-M5
C735	1:J2	7-A1
C736	1:J2	7-B1
C740A	1:H2	7-B4
C740B	1:H2	7-B3
C741A	1:H2	7-C4
C741B	1:G2	7-C3
C742A	1:H2	7-D4
C742B	1:H3	7-D3
C743	1:H2	7-B1
C745	1:G3	7-D1
C750	1:H4	7-Q7
C757	1:G4	7-F5
C759	1:G4	7-G4
C761	1:G3	7-J4
C762	1:G3	7-K4
C764	1:H3	7-J2
C765	1:G3	7-K2
C767	1:H3	7-K3
C769	1:H4	7-N4
C770	1:H4	7-N4
C772	1:G4	7-N2
C774	1:H4	7-P2
C776	1:H4	7-N1
C782	1:G2	7-N1
C784	1:G2	7-Q1
C786	1:G2	7-R1
C788	1:G3	7-P0
C790	1:G3	7-Q0
C792	1:G3	7-Q0
C810	1:L3	8-K8
C812	1:L2	8-F5
C813	1:K2	8-H5
C822	1:M2	8-B2
C823	1:M3	8-C2
C824	1:M2	8-C1
C826	1:N3	8-C0

Device	PCB	Circuit
C827	1:N3	8-D0
C828	1:N3	8-E0
C830	1:N3	8-R1
C838	1:N4	8-F0
C841	1:N2	8-K2
C844	1:M2	8-L2
C910	1:P7	9-E4
C920	1:P7	9-F4
C930	1:P6	9-G4
D111	1:P4	1-R1
%D205	1:B2	2-D9
%D210	1:B2	2-E9
D220	1:B4	2-P7
D220	1:B4	2-P6
D230	1:B7	2-R5
D240	1:D4	2-C4
D240	1:D4	2-B2
D250	1:D3	2-E2
D250	1:D3	2-D3
D260	1:C2	2-C2
D260	1:C2	2-C2
D270	1:D2	2-C1
D270	1:D2	2-C1
D340	2:F4	3-D2
D350	2:F4	3-E2
D360	2:F4	3-E2
D610	1:N6	6-L6
D610	1:N6	6-K6
D620	1:N4	6-B1
D620	1:N4	6-B2
D630	1:M5	6-G2
D630	1:M5	6-G3
D635	1:M4	6-G3
D640	1:L5	6-M1
D640	1:L5	6-M2
D710	1:J3	7-L8
D710	1:J3	7-L8
D720	1:H3	7-P8
D720	1:H3	7-P8
D730	1:H3	7-H1
D740	1:H3	7-K2
D810	1:M2	8-B7
IC210	1:C7	2-H0
IC210	1:C7	2-Q0
IC210	1:C7	2-K2
IC210	1:C7	2-L1
IC210	1:C7	2-C6
IC220	1:D6	2-P0
IC220	1:D6	2-M3
IC220	1:D6	2-D5
IC230	1:B4	2-G0
IC230	1:B4	2-J0
IC230	1:B4	2-L5
IC230	1:B4	2-N6
IC230	1:B4	2-G1
IC240	1:D4	2-F3
IC250	1:D3	2-E1

Device	PCB	Circuit
IC260	1:D8	2-N0
IC260	1:D8	2-F0
IC260	1:D8	2-Q2
IC260	1:D8	2-Q3
IC260	1:D8	2-N3
IC330	1:E8	3-E9
IC330	1:E8	3-M8
IC330	1:E8	3-M0
IC610	1:M5	6-G8
IC630	1:N5	6-K5
IC640	1:M5	6-F1
IC640	1:M5	6-Q6
IC640	1:M5	6-N6
IC650	1:L5	6-F4
=IC700	1:K3	7-A8
IC710	1:J2	7-E8
IC710	1:J2	7-C6
IC710	1:J2	7-G0
IC710	1:J2	7-D6
IC710	1:J2	7-D7
IC710	1:J2	7-D6
IC710	1:J2	7-C6
IC720	1:J3	7-P6
IC720	1:J3	7-J0
IC720	1:J3	7-N7
IC720	1:J3	7-M7
IC720	1:J3	7-K7
IC720	1:J3	7-F8
IC720	1:J3	7-K0
IC730	1:J4	7-H8
IC730	1:J4	7-G7
IC740	1:H2	7-D1
IC750	1:H4	7-N3
IC750	1:H4	7-H5
IC750	1:H4	7-Q7
IC820	1:L4	8-N2
IC830	1:N3	8-J0
IC830	1:N3	8-Q1
IC830	1:N3	8-J0
IC830	1:N3	8-J1
IC830	1:N3	8-C0
L335	1:F4	3-E3
L340	1:E4	3-F2
L345	1:F5	3-H2
L350	1:F5	3-H2
L355	1:F5	3-J3
L360	1:F5	3-K3
L365	1:E5	3-L3
L370	1:E5	3-M2
L375	1:E6	3-M4
L380	1:F6	3-N4
L385	1:F6	3-N3
L390	1:E6	3-R4
L750	1:G4	7-R0
L910	1:P7	9-F4
L920	1:P7	9-G4
P100	1:P6	1-R8
P150	1:P2	1-Q4
P160	1:P2	1-Q4
P170	1:P2	1-Q3
P204	1:D1	2-A8
P208	1:D1	2-A8
P210	1:D6	2-A7
P211	1:D5	2-A7
P212	1:D6	2-A6
P215	1:D4	2-A2
P217	1:D4	2-A2
P219	1:D2	2-A1
P225	1:D2	2-A0
P230	1:C5	2-B0
P231	1:D8	2-B0
P233	1:C1	2-R9
P235	1:C1	2-R9
P237	1:B7	2-R8

Device	PCB	Circuit
P239	1:C7	2-R8
P240	1:C7	2-R8
P243	1:B7	2-R7
P244	1:B7	2-R7
P245	1:B8	2-R6
P247	1:B8	2-R6
P248	1:B7	2-R6
P249	1:C7	2-R5
P251	1:C7	2-R5
P255	1:D5	2-R4
P257	1:C2	2-R4
P259	1:B8	2-R3
P261	1:B8	2-R3
P263	1:B2	2-R2
P265	1:C5	2-M0
P267	1:C8	2-N2
P269	1:D8	2-P2
P271	1:C9	2-N1
P273	1:D9	2-P0
P275	1:D7	2-Q0
P750	1:H4	7-R3
P805	1:M2	8-A7
P810	1:L3	8-A5
P820	1:L4	8-M8
P825	1:L4	8-M8
P830	1:L4	8-M8
P835	1:L4	8-M7
P840	1:L4	8-M7
PL100	1:P3	1-F0
PL205	1:C5	2-J8
PL210	1:C3	2-H4
PL215	1:C4	2-K3
PL220	1:C4	2-H2
Q210	1:C6	2-J8
Q220	1:B3	2-L7
Q230	1:A4	2-M8
Q240	1:B7	2-Q7
Q250	1:B7	2-R5
Q260	1:C4	2-F3
Q270	1:D2	2-D1
Q305	2:E7	3-B8
Q310	2:F8	3-G8
Q315	1:F8	3-J8
Q320	2:E5	3-A5
Q325	2:E4	3-C5
Q330	2:E4	3-D4
Q335	2:E4	3-E6
Q340	2:E5	3-G6
Q345	2:E5	3-H6
Q365	1:F5	3-J2
Q370	1:E5	3-N3
Q510	1:J5	5-D1
Q520	1:J5	5-H2
Q530	1:J5	5-H0
Q540	1:K5	5-L2
Q550	1:K5	5-L0
Q610	1:L6	6-E8
Q620	1:N6	6-P8
Q630	1:M6	6-P5
Q660	1:L5	6-N1
Q670	1:L6	6-Q2
Q710	1:J3	7-K8
Q720	1:J3	7-K8
Q730	1:H3	7-N8
Q740	1:H3	7-N8
Q750	1:G4	7-F3
Q760	1:H3	7-H3
Q770	1:H3	7-H1
Q775	1:H3	7-K3
Q780	1:H3	7-K3
Q785	1:H3	7-K2
Q790	1:H4	7-M3
Q795	1:G3	7-P0
Q810	1:M2	8-E7

Device	PCB	Circuit
Q820	1:L2	8-D5
Q830	1:L2	8-D5
Q840	1:L2	8-F5
Q850	1:M2	8-G5
Q860	1:L4	8-B3
%R150	1:P2	1-R4
R160	1:P2	1-R3
R201	1:B2	2-E9
R202	1:C1	2-F9
R204	1:C7	2-B6
R205	1:C7	2-D6
R206	1:B7	2-G8
R207	1:B6	2-G8
R208	1:B6	2-G8
R209	1:C6	2-H8
R210	1:B6	2-H7
R212	1:D4	2-F6
R213	1:C4	2-G6
R214	1:D4	2-G6
R215	1:C4	2-H6
R216	1:C3	2-K7
R217	1:A4	2-M8
R218	1:A4	2-N7
R219	1:B4	2-N8
R221	1:B7	2-R7
R223	1:B4	2-K6
R224	1:C4	2-K5
R225	1:B4	2-L5
R226	1:B4	2-L4
R227	1:B4	2-M4
R229	1:B4	2-M7
R230	1:B4	2-M6
R231	1:B4	2-M6
R232	1:B4	2-M5
R233	1:B4	2-M6
R235	1:B4	2-P6
R237	1:B7	2-Q7
R238	1:B7	2-R7
R239	1:B8	2-R6
R241	1:B8	2-Q6
R242	1:B7	2-Q5
R244	1:C6	2-A5
R245	1:D4	2-D4
R247	1:D3	2-E4
R248	1:C3	2-E3
R249	1:D4	2-F3
R251	1:C4	2-G4
R253	1:C6	2-J2
R254	1:C6	2-K3
R255	1:C7	2-K2
R256	1:D8	2-M3
R257	1:D8	2-N5
R258	1:D8	2-N4
R259	1:D5	2-P4
R260	1:D8	2-N4
R262	1:D8	2-N3
R263	1:C8	2-P3
&R264	1:C8	2-P3
&R265	1:C8	2-P3
&R266	1:C8	2-P3
R267	1:C8	2-R2
R268	1:D2	2-C0
R269	1:C2	2-C1
R270	1:C2	2-D1
R271	1:C3	2-E1
R272	1:C4	2-F2
R273	1:B5	2-G2
R274	1:C4	2-G1
R275	1:C4	2-H0
R277	1:B5	2-J1
R278	1:B5	2-J0
R279	1:B5	2-K0
R280	1:B5	2-K0
R282	1:D7	2-K1
R283	1:D7	2-L1

Device	PCB	Circuit
R284	1:D7	2-L0
R285	1:C8	2-M0
R286	1:C7	2-M0
R287	1:D9	2-M0
R288	1:C6	2-M2
R289	1:D9	2-M0
R290	1:C8	2-N2
R291	1:C8	2-N1
R292	1:D8	2-Q2
R293	1:D9	2-Q2
R294	1:D9	2-Q1
R295	1:D8	2-R1
R296	1:D6	2-P0
R297	1:D7	2-P1
%R298	1:D7	2-Q0
R299	1:C7	2-R0
R302	2:F7	3-A7
R304	2:E7	3-B7
R306	2:F7	3-C8
R308	2:E8	3-C9
R310	2:F8	3-C9
R312	2:F8	3-D8
R314	2:F8	3-D7
R316	2:F8	3-E8
R318	2:F8	3-E9
R320	2:F8	3-G9
R322	2:F8	3-H8
R324	2:F7	3-J8
R326	2:F7	3-J7
R328	2:F7	3-K8
R330	2:F8	3-M8
R332	2:E4	3-C5
R334	2:E4	3-D6
R336	2:E4	3-D5
R338	2:E4	3-D4
R340	2:E5	3-D5
R342	2:E4	3-F5
R344	2:E5	3-F6
R346	2:E5	3-F6
R348	2:E5	3-G5
R350	2:E5	3-H5
R352	2:E6	3-J6
R354	2:E5	3-J6
R356	2:E6	3-K6
R359	1:F5	3-B2
R360	1:F4	3-C2
R362	1:F4	3-C2
R364	2:F4	3-D2
R366	2:F4	3-D1
R368	2:F4	3-D0
R370	2:F4	3-E1
R372	2:E5	3-G1
R374	2:F5	3-J2
R376	2:F5	3-J2
R378	1:F5	3-J3
R380	1:F5	3-J4
R382	1:F5	3-J4
R384	2:E6	3-L4
R386	2:E6	3-L2
R388	1:F6	3-M4
R390	1:E6	3-Q3
R392	1:E6	3-P2
R394	1:E6	3-Q3
R396	1:E6	3-Q2
R502	1:K6	5-K9
R505	1:K6	5-L8
R510	1:K6	5-L7
R515	1:H6	5-J5
R520	1:J5	5-C1
R525	1:J5	5-D1
R530	1:J5	5-D0
R535	1:J5	5-E1
R540	1:K5	5-H2
R545	1:K5	5-J1
R550	1:K5	5-K2
R555	1:K5	5-K1

 Copyright TEL

Device	PCB	Circuit
R560	1:K5	5-M0
R609	1:L6	6-B8
R613	1:L6	6-C8
R615	1:M5	6-F9
R617	1:M5	6-J8
R619	1:M6	6-L8
R621	1:M6	6-L8
R625	1:N6	6-L7
R629	1:M5	6-P6
R633	1:M5	6-Q8
R637	1:N5	6-K6
R641	1:N5	6-L4
R645	1:N5	6-L5
R649	1:M5	6-M5
R653	1:M5	6-Q4
R657	1:M5	6-D1
R661	1:M5	6-E3
R665	1:M5	6-E2
R669	1:M5	6-E2
R673	1:M5	6-E0
R677	1:M4	6-F4
R681	1:L5	6-L2
R685	1:L5	6-N2
R689	1:L6	6-Q3
R693	1:L6	6-Q1
R696	1:M6	6-Q1
R701	1:K4	7-A9
R702	1:K4	7-C9
R703	1:J3	7-C8
=R705	1:K3	7-A7
R706	1:J3	7-B6
R708	1:H3	7-C7
R710	1:H2	7-E7
R711	1:J2	7-B6
R712	1:J3	7-D9
R713	1:J4	7-F8
%R715	1:K4	7-H6
R717	1:J4	7-H7
R718	1:J4	7-H7
R719	1:J4	7-J6
R720	1:J3	7-K7
R721	1:J3	7-K9
R722	1:J3	7-K8
R723	1:H3	7-M7
R725	1:J4	7-N7
%R726	1:J3	7-N6
R727	1:H3	7-N9
R728	1:H3	7-N8
R742	1:H2	7-B4
R743	1:H2	7-C5
R744	1:G2	7-D4
R746	1:H3	7-E4
R747	1:H3	7-E5
R748	1:J2	7-A1
R749	1:J2	7-B1
R750	1:H4	7-Q7
R752	1:G4	7-F5
R753	1:G4	7-F3
R754	1:G3	7-F3
R756	1:G3	7-G5
R757	1:G4	7-G4
R758	1:H3	7-H4
R759	1:H3	7-J4
R760	1:H3	7-K4
R762	1:H3	7-K4
R763	1:H4	7-L4
R765	1:H3	7-H2
R766	1:G3	7-J3
R767	1:H3	7-K2
R769	1:H3	7-L3
R771	1:H4	7-M3
R772	1:G4	7-M2
R774	1:H4	7-M2
R775	1:H4	7-N2
R777	1:H4	7-R3
R784	1:G3	7-P1

Device	PCB	Circuit
R785	1:G3	7-Q1
R786	1:G2	7-Q1
R787	1:G2	7-R2
R790	1:G3	7-P0
R791	1:G3	7-Q0
R792	1:G3	7-Q0
R801	1:M2	8-D7
R802	1:M2	8-D7
R808	1:L2	8-B4
R809	1:L2	8-D5
R810	1:L2	8-D6
R811	1:L2	8-E6
R812	1:L2	8-D5
R813	1:L2	8-D4
R815	1:L2	8-F4
R816	1:L2	8-F4
R818	1:M2	8-F5
R819	1:M2	8-F5
R821	1:M4	8-B3
R822	1:M4	8-E3
R824	1:L4	8-L8
R825	1:L4	8-L8
R826	1:L4	8-L8
R827	1:L4	8-L7
R828	1:L4	8-L7
R829	1:L4	8-P9
R830	1:L3	8-P9
R831	1:L3	8-P9
R832	1:L3	8-P8
R833	1:L3	8-P8
R835	1:L3	8-P8
R836	1:L3	8-P8
R837	1:L3	8-P7
R840	1:L3	8-P7
R841	1:L3	8-P7
R842	1:L3	8-P6
R843	1:L3	8-P6
R845	1:M4	8-Q5
R846	1:K2	8-Q4
R847	1:K2	8-Q4
R848	1:L2	8-J4
R849	1:M4	8-Q3
R850	1:K2	8-Q4
R853	1:M4	8-N3
R854	1:M4	8-N3
R855	1:M2	8-B0
R859	1:N2	8-C1
R861	1:N2	8-D1
R863	1:N3	8-E1
R865	1:N4	8-E0
R867	1:N3	8-E1
R871	1:N3	8-G2
R872	1:M4	8-H1
R873	1:N3	8-G1
R874	1:N3	8-H0
R875	1:N3	8-G0
R876	1:N3	8-H0
R877	1:M2	8-K2
R879	1:N2	8-L3
RV210	1:B7	2-F9
RV220	1:A4	2-M6
RV805	1:N4	8-F1
SK205	1:B5	2-A5
SK310	1:E7	3-R3
SK420	1:M8	1-M8
SK501	1:G6	5-D6
SK502	1:G6	5-D5
SK503	1:G6	5-D4
SK504	1:G5	5-D3
SK505	1:G5	5-D2
SK513	1:H5	5-H3
SK522	1:H6	5-K5
SK531	1:K6	5-N6
SK532	1:K5	5-N5

Device	PCB	Circuit
SK533	1:K5	5-N4
SK534	1:K5	5-N3
SK535	1:K5	5-N2
=SK710	1:K3	7-A7
SK805	1:K3	8-Q9
SK805	1:K3	8-Q7
SK805	1:K3	8-Q5
SK805	1:K3	8-Q7
SK805	1:K3	8-Q8
SK805	1:K3	8-Q7
SK805	1:K3	8-Q8
SK805	1:K3	8-Q6
SK805	1:K3	8-Q8
SK805	1:K3	8-Q6
SK805	1:K3	8-Q6
SK805	1:K3	8-Q9
SK805	1:K3	8-Q6
SK805	1:K3	8-Q9
SK805	1:K3	8-Q7
SK805	1:K3	8-Q8
SK810	1:M3	8-H5
SL201	2:D1	2-B9
SL202	2:D1	2-B8
SL203	2:D2	2-B2
SL204	2:D2	2-B1
SL320	1:E4	3-E4
SL501	2:J5	5-F0
SL810	1:M2	8-C7
SW230	1:B8	2-B4
T210	1:B2	2-C8
T610	1:L5	6-N2
TP206	1:D5	2-H7
TP305	2:E6	3-L6
TP308	1:E5	3-G6
TP601	1:N5	6-K9
TP602	1:L6	6-R9
TP603	1:L5	6-J2
TP604	1:L5	6-M6
TP607	1:L4	6-J9
TP710	1:H4	7-H5
TP715	1:J2	7-C6

Device	PCB	Circuit

Copyright TEL

T837 Parts List (IPN 220-01390-03)

How To Use This Parts List

The components listed in this parts list are divided into two main types: those with a circuit reference (e.g. C2, D1, R121, etc.) and those without (miscellaneous and mechanical).

Those with a circuit reference are grouped in alphabetical order and then in numerical order within each group. Each component entry comprises three or four columns: the circuit reference, variant (if applicable), IPN and description. A number in the variant column indicates that this is a variant component which is fitted only to the product type listed. Static sensitive devices are indicated by an (S) at the start of the description column.

The miscellaneous and mechanical section lists the variant and common parts in IPN order. Where possible, a number in the legend column indicates their position in the mechanical assembly drawing.

The Parts List Amendments box below lists component changes that took place after the parts list and diagrams in this section were compiled. These changes (e.g. value changes, added/deleted components, etc.) are listed by circuit reference in alphanumeric order and supersede the information given in the parts list or diagrams. Components without circuit references are listed in IPN order.

Parts List Amendments

D111	Changed from MR750 (IPN 001-00011-60) to MR2520L (IPN 001-00012-90) to provide overvoltage transient suppression (750087/88/89/90/91/92).	
R386	Changed from 47Ω (IPN 036-12470-00) to 33Ω (IPN 036-12330-00)	T837-2X only - to cure power sag (710925).
R390	Changed from 12Ω (IPN 030-52120-20) to 3.3Ω (IPN 030-51330-00)	
R392, R396	Changed from 820Ω (IPN 030-53820-20) to 1k5 (IPN 030-54150-00)	
R394	12Ω (IPN 030-52120-20) deleted	
349-00020-36	The two M3x8 Torx screws which secure the module into the rack frame have been replaced by M3x8 Pozidriv screws (IPN 349-00020-55) (750101/2/3/5/6).	

Note: %D205 and %D210 are optional level limiting diodes for special applications.

=R705 (47 ohm) and =SK710 are fitted in place of =IC700 when an external frequency reference is used. These two components are supplied with the auxiliary D-range kits (T800-06-0000 & T800-06-0001).

Ref	Var	IPN	Description
C201		020-07470-92	CAP BI-P RA 4M7 50V 6X11 5 LS
C202		020-07470-92	CAP BI-P RA 4M7 50V 6X11 5 LS
C204		020-07470-92	CAP BI-P RA 4M7 50V 6X11 5 LS
C205		020-07470-92	CAP BI-P RA 4M7 50V 6X11 5 LS
C207		014-07470-00	CAP TANT CHIP 4U7 3.5 X 2.8MM
C209		015-25470-08	CAP CER 0805 47N 10% X7R 50V
C210		015-06100-08	CAP CER 1206 100N 10% X7R 50V
C211		015-06100-08	CAP CER 1206 100N 10% X7R 50V
C213		025-08100-02	CAP TANT BEAD 10M 10% 16V
C215		014-08220-01	(L)CAP TANT 22UF10V276MSER
C217		015-24220-08	CAP CER 0805 2N2 10% X7R 50V
C219		015-24100-08	CAP CER 0805 1N 10% X7R 50V
C221		014-08220-01	(L)CAP TANT 22UF10V276MSER
C223		015-06100-08	CAP CER 1206 100N 10% X7R 50V
C225		015-06100-08	CAP CER 1206 100N 10% X7R 50V
C227		015-06100-08	CAP CER 1206 100N 10% X7R 50V
C229		015-23150-01	CAP CER 0805 150P 5% NPO 50V
C230		015-06100-08	CAP CER 1206 100N 10% X7R 50V
C232		015-23150-01	CAP CER 0805 150P 5% NPO 50V
C233		020-08470-02	CAP ELE RA 47M 16V 6X11MM
C235		015-24100-08	CAP CER 0805 1N 10% X7R 50V
C237		020-07100-02	CAP ELE RA 1M 50V 5X11MM
C239		020-07470-92	CAP BI-P RA 4M7 50V 6X11 5 LS
C241		015-06100-08	CAP CER 1206 100N 10% X7R 50V
C242		025-08100-02	CAP TANT BEAD 10M 10% 16V
C243		015-24100-08	CAP CER 0805 1N 10% X7R 50V
C245		015-23150-01	CAP CER 0805 150P 5% NPO 50V
C247		015-23150-01	CAP CER 0805 150P 5% NPO 50V
C249		015-24100-08	CAP CER 0805 1N 10% X7R 50V
C251		015-24100-08	CAP CER 0805 1N 10% X7R 50V
C253		015-24100-08	CAP CER 0805 1N 10% X7R 50V
C255		015-24100-08	CAP CER 0805 1N 10% X7R 50V
C257		015-22470-01	CAP CER 0805 47P 5% NPO 50V
C259		015-25470-08	CAP CER 0805 47N 10% X7R 50V
C260		015-06100-08	CAP CER 1206 100N 10% X7R 50V
C261		014-07470-00	CAP TANT CHIP 4U7 3.5 X 2.8MM
C263		020-09100-04	CAP ELE RA 100M 10V 6.3X9MM
C265		020-07470-92	CAP BI-P RA 4M7 50V 6X11 5 LS
C267		015-24470-08	CAP CER 0805 4N7 10% X7R 50V
&C269	10	015-21150-01	CAP CER 0805 1P5+-1/4P NPO 50V
&C269	13	015-21150-01	CAP CER 0805 1P5+-1/4P NPO 50V
&C269	15	015-21470-01	CAP CER 0805 4P7+-1/4P NPO 50V
&C269	16	015-21470-01	CAP CER 0805 4P7+-1/4P NPO 50V
&C269	20	015-21150-01	CAP CER 0805 1P5+-1/4P NPO 50V
&C269	23	015-21150-01	CAP CER 0805 1P5+-1/4P NPO 50V
&C269	25	015-21470-01	CAP CER 0805 4P7+-1/4P NPO 50V
&C269	26	015-21470-01	CAP CER 0805 4P7+-1/4P NPO 50V
&C271	10	015-22470-01	CAP CER 0805 47P 5% NPO 50V
&C271	13	015-22470-01	CAP CER 0805 47P 5% NPO 50V
&C271	15	015-22470-01	CAP CER 0805 47P 5% NPO 50V
&C271	16	015-22560-01	CAP CER 0805 56P 5% NPO 50V
&C271	20	015-22470-01	CAP CER 0805 47P 5% NPO 50V
&C271	23	015-22470-01	CAP CER 0805 47P 5% NPO 50V
&C271	25	015-22470-01	CAP CER 0805 47P 5% NPO 50V
&C271	26	015-22560-01	CAP CER 0805 56P 5% NPO 50V
C273		015-25470-08	CAP CER 0805 47N 10% X7R 50V
C275		015-23120-01	CAP CER 0805 120P 5% NPO 50V
C277		015-25100-08	CAP CER 0805 10N 10% X7R 50V
C279		015-24100-08	CAP CER 0805 1N 10% X7R 50V
C281		015-25220-08	CAP CER 0805 22N 10% X7R 50V
C283		015-21470-01	CAP CER 0805 4P7+-1/4P NPO 50V
C285		015-21470-01	CAP CER 0805 4P7+-1/4P NPO 50V
C287		020-09100-04	CAP ELE RA 100M 10V 6.3X9MM
&C289	10	015-25470-08	CAP CER 0805 47N 10% X7R 50V
&C289	13	015-25470-08	CAP CER 0805 47N 10% X7R 50V
&C289	15	015-25470-08	CAP CER 0805 47N 10% X7R 50V
&C289	16	015-25680-08	CAP CER 0805 68N 10% X7R 50V
&C289	20	015-25470-08	CAP CER 0805 47N 10% X7R 50V
&C289	23	015-25470-08	CAP CER 0805 47N 10% X7R 50V
&C289	25	015-25470-08	CAP CER 0805 47N 10% X7R 50V
&C289	26	015-25680-08	CAP CER 0805 68N 10% X7R 50V
C291		014-08220-01	(L)CAP TANT 22UF10V276MSER
C293		015-27100-10	CAP CER 0805 1M+80-20% Y5V 16V
%C294		015-22470-01	CAP CER 0805 47P 5% NPO 50V
%C295		022-06470-02	CAP MYLAR 470N 10% 50V
C304		015-24470-08	CAP CER 0805 4N7 10% X7R 50V
C308		015-25100-08	CAP CER 0805 10N 10% X7R 50V
C312		015-24100-08	CAP CER 0805 1N 10% X7R 50V
C316		015-24100-08	CAP CER 0805 1N 10% X7R 50V
C317		015-23100-01	CAP CER 0805 100P 5% NPO 50V
C318		015-23100-01	CAP CER 0805 100P 5% NPO 50V
C320		015-24100-08	CAP CER 0805 1N 10% X7R 50V
C324		015-24100-08	CAP CER 0805 1N 10% X7R 50V
C330A		015-25100-08	CAP CER 0805 10N 10% X7R 50V
C330B		020-08100-04	CAP ELE RA 10M 16V 4X7MM
C332		015-24100-08	CAP CER 0805 1N 10% X7R 50V
C334		015-25100-08	CAP CER 0805 10N 10% X7R 50V
C336		015-24100-08	CAP CER 0805 1N 10% X7R 50V
C338		015-25220-08	CAP CER 0805 22N 10% X7R 50V
C340		015-24100-08	CAP CER 0805 1N 10% X7R 50V
C342		015-06100-08	CAP CER 1206 100N 10% X7R 50V
C344		015-24100-08	CAP CER 0805 1N 10% X7R 50V
C346		015-24100-08	CAP CER 0805 1N 10% X7R 50V
C349		015-24100-08	CAP CER 0805 1N 10% X7R 50V
C350		015-24100-08	CAP CER 0805 1N 10% X7R 50V
C353		015-24100-08	CAP CER 0805 1N 10% X7R 50V
C356		015-23150-01	CAP CER 0805 150P 5% NPO 50V
C359		015-24100-08	CAP CER 0805 1N 10% X7R 50V
C362		015-24100-08	CAP CER 0805 1N 10% X7R 50V
C365		015-22330-01	CAP CER 0805 33P 5% NPO 50V
C368		015-22820-01	CAP CER 0805 82P 5% NPO 50V
C370		015-24100-08	CAP CER 0805 1N 10% X7R 50V
C373		022-55470-10	CAP MYLAR AI 47N 5% 63V POTTED
C376		015-24100-08	CAP CER 0805 1N 10% X7R 50V
C379		015-24100-08	CAP CER 0805 1N 10% X7R 50V
C382		015-22470-01	CAP CER 0805 47P 5% NPO 50V
C385		020-07470-04	CAP ELE RA 4M7 25V 20%8X13 SOL
C388		015-24100-08	CAP CER 0805 1N 10% X7R 50V
C391		015-21820-01	CAP CER 0805 8P2+-1/4P NPO 50V
C394		015-04100-04	CAP CER 1206 1N 10% X7R 50V
C396		015-04100-04	CAP CER 1206 1N 10% X7R 50V
C399		015-24100-08	CAP CER 0805 1N 10% X7R 50V
C503		015-24470-08	CAP CER 0805 4N7 10% X7R 50V
C505		015-06100-08	CAP CER 1206 100N 10% X7R 50V
C510		015-25220-08	CAP CER 0805 22N 10% X7R 50V
C513		015-25100-08	CAP CER 0805 10N 10% X7R 50V
C535		015-06100-08	CAP CER 1206 100N 10% X7R 50V
C550		014-07470-00	CAP TANT CHIP 4U7 3.5 X 2.8MM
C605		015-24100-08	CAP CER 0805 1N 10% X7R 50V
C610A		015-25100-08	CAP CER 0805 10N 10% X7R 50V
C610B		020-09100-04	CAP ELE RA 100M 10V 6.3X9MM
C611A		020-09100-04	CAP ELE RA 100M 10V 6.3X9MM
C611B		015-25100-08	CAP CER 0805 10N 10% X7R 50V
C623		015-24100-08	CAP CER 0805 1N 10% X7R 50V
C625		020-09470-07	CAPEL470M16V20%V 8*20 3.5L.ESR
C626		015-24470-08	CAP CER 0805 4N7 10% X7R 50V
C628		015-24100-08	CAP CER 0805 1N 10% X7R 50V
C630		015-06100-08	CAP CER 1206 100N 10% X7R 50V
C631A		015-06100-08	CAP CER 1206 100N 10% X7R 50V
C634		025-08100-02	CAP TANT BEAD 10M 10% 16V
C636		015-06100-08	CAP CER 1206 100N 10% X7R 50V
C638		015-24100-08	CAP CER 0805 1N 10% X7R 50V
C640		015-24100-08	CAP CER 0805 1N 10% X7R 50V
C655		015-24100-08	CAP CER 0805 1N 10% X7R 50V
C660		015-06100-08	CAP CER 1206 100N 10% X7R 50V
C665		020-58100-03	CAP ELE AI RDL 10M 50V 5X11MM
C670		025-07330-01	CAP TANT BEAD 3M3 35V
C673		015-24470-08	CAP CER 0805 4N7 10% X7R 50V
C677		020-07100-02	CAP ELE RA 1M 50V 5X11MM
C681		015-06100-08	CAP CER 1206 100N 10% X7R 50V
C684		025-08100-02	CAP TANT BEAD 10M 10% 16V
C687		015-24100-08	CAP CER 0805 1N 10% X7R 50V
C690		015-06100-08	CAP CER 1206 100N 10% X7R 50V
C693		025-08100-02	CAP TANT BEAD 10M 10% 16V
C700		015-06100-08	CAP CER 1206 100N 10% X7R 50V
C703		015-24100-08	CAP CER 0805 1N 10% X7R 50V
C705		015-21820-01	CAP CER 0805 8P2+-1/4P NPO 50V
C706		015-22470-01	CAP CER 0805 47P 5% NPO 50V
C708		014-07470-00	CAP TANT CHIP 4U7 3.5 X 2.8MM
C709		015-06100-08	CAP CER 1206 100N 10% X7R 50V
C710		015-25100-08	CAP CER 0805 10N 10% X7R 50V
C712		015-22470-01	CAP CER 0805 47P 5% NPO 50V
C720		015-06100-08	CAP CER 1206 100N 10% X7R 50V
C722		015-06100-08	CAP CER 1206 100N 10% X7R 50V
C724		014-08220-01	(L)CAP TANT 22UF10V276MSER
C725		014-08220-01	(L)CAP TANT 22UF10V276MSER
C726		015-25100-08	CAP CER 0805 10N 10% X7R 50V
C727		015-23220-01	CAP CER 0805 220P 5% NPO 50V
C729		015-23220-01	CAP CER 0805 220P 5% NPO 50V
%C733		015-23470-08	CAP CER 0805 470P 10% X7R 50V
C735		015-22470-01	CAP CER 0805 47P 5% NPO 50V
C736		015-22470-01	CAP CER 0805 47P 5% NPO 50V
C740A		015-24100-08	CAP CER 0805 1N 10% X7R 50V
C740B		015-25100-08	CAP CER 0805 10N 10% X7R 50V
C741A		014-07470-00	CAP TANT CHIP 4U7 3.5 X 2.8MM
C741B		015-25100-08	CAP CER 0805 10N 10% X7R 50V
C742A		015-06100-08	CAP CER 1206 100N 10% X7R 50V
C742B		015-25100-08	CAP CER 0805 10N 10% X7R 50V
C743		015-22470-01	CAP CER 0805 47P 5% NPO 50V
C745		015-24100-08	CAP CER 0805 1N 10% X7R 50V
C750		025-08100-03	CAP 10M 35V 20% TANT 5MM L/S
C757		015-25100-08	CAP CER 0805 10N 10% X7R 50V
C759		015-25100-08	CAP CER 0805 10N 10% X7R 50V
C761		015-25100-08	CAP CER 0805 10N 10% X7R 50V
C762		014-08220-01	(L)CAP TANT 22UF10V276MSER
C764		015-25100-08	CAP CER 0805 10N 10% X7R 50V
C765		014-07470-00	CAP TANT CHIP 4U7 3.5 X 2.8MM
C767		015-24100-08	CAP CER 0805 1N 10% X7R 50V
C769		015-24100-08	CAP CER 0805 1N 10% X7R 50V
C770		014-08220-01	(L)CAP TANT 22UF10V276MSER
C772		014-08220-01	(L)CAP TANT 22UF10V276MSER
C774		022-06330-05	CAP METAL PPS 330N 10% 63V 5MM
C776		015-25150-08	CAP CER 0805 15N 10% X7R 50V

Copyright TEL

Ref	Var	IPN	Description
C782		015-24100-08	CAP CER 0805 1N 10% X7R 50V
C784		015-24100-08	CAP CER 0805 1N 10% X7R 50V
C786		015-06100-08	CAP CER 1206 100N 10% X7R 50V
C788		015-24100-08	CAP CER 0805 1N 10% X7R 50V
C790		015-24100-08	CAP CER 0805 1N 10% X7R 50V
C792		015-24100-08	CAP CER 0805 1N 10% X7R 50V
C810		015-25470-08	CAP CER 0805 47N 10% X7R 50V
C812		015-23100-01	CAP CER 0805 100P 5% NPO 50V
C813		015-24100-08	CAP CER 0805 1N 10% X7R 50V
C822		014-07470-00	CAP TANT CHIP 4U7 3.5 X 2.8MM
C823		015-25220-08	CAP CER 0805 22N 10% X7R 50V
C824		015-25470-08	CAP CER 0805 47N 10% X7R 50V
C826		015-23220-01	CAP CER 0805 220P 5% NPO 50V
C827		015-22330-01	CAP CER 0805 33P 5% NPO 50V
C828		015-25100-08	CAP CER 0805 10N 10% X7R 50V
C830		015-25470-08	CAP CER 0805 47N 10% X7R 50V
C838		020-09100-04	CAP ELE RA 100M 10V 6.3X9MM
C841		020-09100-04	CAP ELE RA 100M 10V 6.3X9MM
C844		015-25100-08	CAP CER 0805 10N 10% X7R 50V
C910		015-02120-06	CAP CER 1210 12P NPO500VGRM42
C920		015-02270-06	CAP CER 1210 27P NPO500VGRM42
C930		015-02120-06	CAP CER 1210 12P NPO500VGRM42
D111		001-00011-60	S) DIODE MR750 OR SR2607
D220		001-10000-99	S) DIODE SMD BAV99 D-SW SOT23
D230		001-00010-40	S)DIODE ZEN 33V 1.3W BZT03-C33
D240		001-10000-56	S) DIODE SMD BAW56 D-SW SOT23
D250		001-10000-56	S) DIODE SMD BAW56 D-SW SOT23
D260		001-10000-56	S) DIODE SMD BAW56 D-SW SOT23
D270		001-10000-99	S) DIODE SMD BAV99 D-SW SOT23
D340		001-10000-18	S) DIODE SMD BAT18 S-SW SOT23
D350		001-10000-18	S) DIODE SMD BAT18 S-SW SOT23
D360		001-10000-18	S) DIODE SMD BAT18 S-SW SOT23
D610		001-10000-99	S) DIODE SMD BAV99 D-SW SOT23
D620		001-10000-70	S) DIODE SMD BAV70 D-SW SOT23
D630		001-10000-70	S) DIODE SMD BAV70 D-SW SOT23
D635		001-10065-00	DIODE SHTKY SOD123 BAT65 BAT54
D640		001-10000-70	S) DIODE SMD BAV70 D-SW SOT23
D710		001-10000-99	S) DIODE SMD BAV99 D-SW SOT23
D720		001-10000-99	S) DIODE SMD BAV99 D-SW SOT23
D730		001-10065-00	DIODE SHTKY SOD123 BAT65 BAT54
D740		001-10065-00	DIODE SHTKY SOD123 BAT65 BAT54
D810		001-10065-00	DIODE SHTKY SOD123 BAT65 BAT54
IC210		002-10003-24	S) IC SMD 324 4X O-AMP SO14
IC220		002-10126-70	S) IC SMD DS1267S10K 2XDIG POT
IC230		002-10003-24	S) IC SMD 324 4X O-AMP SO14
IC240		002-10040-53	S)MC14053B SMD BREAK B4 MAKE
IC250		002-00020-50	S) IC 4N25A OPTOCOUPLER
IC260		002-10003-24	S) IC SMD 324 4X O-AMP SO14
IC330		002-00012-40	S) IC 358 DUAL O-AMP
IC610		002-00014-58	S) IC 78L05 5V 100MA REG TO92
IC630		002-00014-62	S) IC 317L 100MA REG 3TER TO92
IC640		002-10003-58	S) IC SMD LM358 DUAL O-AMP
IC650		002-10012-32	SMD DS1232LPS-2 LP RESET&W-DOG
=IC700		539-00010-41	TCXO 12.8MHZ +-2.5PPM -30 +70C
IC710		002-74900-04	S) IC SMD 74HC04D 6X INV BUFFD
IC720		002-74910-04	S) IC SMD 74HCU04 6X INV
IC730		002-10045-20	S) IC SMD 74HC4520T 2XCTR 4BIT
IC740		002-14519-10	S) IC MC145191F SMD SYNTH
IC750		002-10330-78	S) IC MC33078D 2X AMP LO NOISE
IC810		002-08951-20	S) IC AT89C51 PLCC44 MIC 12MHZ
IC820		002-12416-00	S)IC SMD AT24C16N-10SC EEPROM
IC830		002-10003-24	S) IC SMD 324 4X O-AMP SO14
LED1		008-00014-79	S)LED 3MM RED WITH WIRE
LED2		008-00014-80	S)LED 3MM GREEN WITH WIRE
L335		056-00021-04	IND FXD 330NH AX
L340		056-00021-04	IND FXD 330NH AX
L345		052-08135-25	COIL A/W 2.5T/3.5MM HOR 0.8MM
L350		052-08125-15	COIL A/W 1.5T/2.5MM HOR 0.8MM
L355		056-00021-01	IND FXD 1.5UH AX
L360		052-08135-35	COIL A/W 3.5T/3.5MM HOR 0.8MM
L365		052-08135-15	COIL A/W 1.5T/3.5MM HOR 0.8MM
L370		065-00010-08	BEAD FERR 4S3 3X0.7X10MM RED
L375		065-00010-04	BEAD FERR F8 4X2X5MM
L380		056-00021-01	IND FXD 1.5UH AX
L385		052-08145-35	COIL A/W 3.5/4.5MM HOR 0.8MM
L390		056-00021-04	IND FXD 330NH AX
L750		056-10068-00	IND FXD SMD 68NH 3.2*2.5*1.6
L910		052-08140-35	COIL A/W 3.5T/4.0MM HOR 0.8MM
L920		052-08140-35	COIL A/W 3.5T/4.0MM HOR 0.8MM
PL100		070-01001-00	D-RANGE 15 WAY COMPL T800
PL205		240-00020-67	HEADER 6W 2X3 PCB MTG STD
PL210		240-00020-67	HEADER 6W 2X3 PCB MTG STD
PL215		240-00020-44	HEADER 10W X2R PCB MTG 5*2
PL220		240-00020-67	HEADER 6W 2X3 PCB MTG STD
Q210		000-10008-48	S) XSTR SMD BCW60 NPN SOT23 SS
Q220		000-10008-17	S) XSTR SMD BC817-25 NPN SOT23
Q230		000-10008-48	S) XSTR SMD BCW60 NPN SOT23 SS
Q240		000-10008-48	S) XSTR SMD BCW60 NPN SOT23 SS
Q250		000-10008-17	S) XSTR SMD BC817-25 NPN SOT23
Q260		000-10008-57	S) XSTR SMD BCW70 PNP SOT23 SS
Q270		000-00011-91	S) XSTR BD139 NPN AF PWR TO126
Q305		000-10008-48	S) XSTR SMD BCW60 NPN SOT23 SS
Q310		000-10008-48	S) XSTR SMD BCW60 NPN SOT23 SS
Q315		000-00012-15	S) XSTR BD234 PNP AF PWR TO126
Q320		000-10008-07	S) XSTR SMD BC807 PNP SOT23 AF
Q325		000-10008-07	S) XSTR SMD BC807 PNP SOT23 AF
Q330		000-10008-57	S) XSTR SMD BCW70 PNP SOT23 SS
Q335		000-10008-07	S) XSTR SMD BC807 PNP SOT23 AF
Q340		000-10008-48	S) XSTR SMD BCW60 NPN SOT23 SS
Q345		000-10008-48	S) XSTR SMD BCW60 NPN SOT23 SS
Q365		000-00031-96	S) XSTR 3866 NPN T092 SWITCH
Q370		000-00022-30	S) XSTR 2N4427 NPN T039 VHF DR
Q510		000-10008-07	S) XSTR SMD BC807 PNP SOT23 AF
Q520		000-10008-07	S) XSTR SMD BC807 PNP SOT23 AF
Q530		000-10008-07	S) XSTR SMD BC807 PNP SOT23 AF
Q540		000-10008-07	S) XSTR SMD BC807 PNP SOT23 AF
Q550		000-10008-48	S) XSTR SMD BCW60 NPN SOT23 SS
Q610		000-10008-07	S) XSTR SMD BC807 PNP SOT23 AF
Q620		000-00012-15	S) XSTR BD234 PNP AF PWR TO126
Q630		000-50011-30	S) XSTR AI BC557B PNP TO92 AF
Q660		000-10008-17	S) XSTR SMD BC817-25 NPN SOT23
Q670		000-10008-57	S) XSTR SMD BCW70 PNP SOT23 SS
Q710		000-10008-48	S) XSTR SMD BCW60 NPN SOT23 SS
Q720		000-10008-57	S) XSTR SMD BCW70 PNP SOT23 SS
Q730		000-10008-48	S) XSTR SMD BCW60 NPN SOT23 SS
Q740		000-10008-57	S) XSTR SMD BCW70 PNP SOT23 SS
Q750		000-10008-07	S) XSTR SMD BC807 PNP SOT23 AF
Q760		000-10008-48	S) XSTR SMD BCW60 NPN SOT23 SS
Q770		000-10008-57	S) XSTR SMD BCW70 PNP SOT23 SS
Q775		000-10008-57	S) XSTR SMD BCW70 PNP SOT23 SS
Q780		000-10008-48	S) XSTR SMD BCW60 NPN SOT23 SS
Q785		000-10008-57	S) XSTR SMD BCW70 PNP SOT23 SS
Q790		000-10003-12	S) XSTR SMD BFR31 N JFET SOT23
Q795		000-10057-10	S) XSTR SMD BR571 NPN SOT23
Q810		000-10008-48	S) XSTR SMD BCW60 NPN SOT23 SS
Q820		000-10008-17	S) XSTR SMD BC817-25 NPN SOT23
Q830		000-10008-57	S) XSTR SMD BCW70 PNP SOT23 SS
Q840		000-10008-57	S) XSTR SMD BCW70 PNP SOT23 SS
Q850		000-10008-48	S) XSTR SMD BCW60 NPN SOT23 SS
Q860		000-10008-48	S) XSTR SMD BCW60 NPN SOT23 SS
R160		036-12100-00	RES M/F 0805 10E 5%
R201		036-13560-00	RES M/F 0805 560E 5%
R202		036-14100-00	RES M/F 0805 1K 5%
R204		036-14220-00	RES M/F 0805 2K2 5%
R205		036-13220-00	RES M/F 0805 220E 5%
R206		036-14100-00	RES M/F 0805 1K 5%
R207		036-14390-00	RES M/F 0805 3K9 5%
R208		036-13560-00	RES M/F 0805 560E 5%
R209		036-15100-00	RES M/F 0805 10K 5%
R210		036-14220-00	RES M/F 0805 2K2 5%
R212		036-16100-00	RES M/F 0805 100K 5%
R213		036-15100-00	RES M/F 0805 10K 5%
R214		036-14820-00	RES M/F 0805 8K2 5%
R215		036-16100-00	RES M/F 0805 100K 5%
R216		036-16100-00	RES M/F 0805 100K 5%
R217		036-14100-00	RES M/F 0805 1K 5%
R218		036-16150-00	RES M/F 0805 150K 5%
R219		036-14220-00	RES M/F 0805 2K2 5%
R221		036-14150-00	RES M/F 0805 1K5 5%
R223		036-17100-00	RES M/F 0805 1M 5%
R224		036-14680-00	RES M/F 0805 6K8 5%
R225		036-17100-00	RES M/F 0805 1M 5%
R226		036-15100-00	RES M/F 0805 10K 5%
R227		036-14220-00	RES M/F 0805 2K2 5%
R229		036-16470-00	RES M/F 0805 470K 5%
R230		036-16100-00	RES M/F 0805 100K 5%
R231		036-15100-00	RES M/F 0805 10K 5%
R232		036-16330-00	RES M/F 0805 330K 5%
R233		036-16100-00	RES M/F 0805 100K 5%
R235		036-14470-00	RES M/F 0805 4K7 5%
R237		036-15470-00	RES M/F 0805 47K 5%
R238		036-15470-00	RES M/F 0805 47K 5%
R239		036-14150-00	RES M/F 0805 1K5 5%
R241		036-14470-00	RES M/F 0805 4K7 5%
R242		036-14220-00	RES M/F 0805 2K2 5%
R244		036-15100-00	RES M/F 0805 10K 5%
R245		036-16100-00	RES M/F 0805 100K 5%
R247		036-15100-00	RES M/F 0805 10K 5%
R248		036-16100-00	RES M/F 0805 100K 5%
R249		036-16100-00	RES M/F 0805 100K 5%
R251		036-16100-00	RES M/F 0805 100K 5%
R253		036-16100-00	RES M/F 0805 100K 5%
R254		036-16100-00	RES M/F 0805 100K 5%
R255		036-15100-00	RES M/F 0805 10K 5%
R256		036-15470-00	RES M/F 0805 47K 5%
R257		036-16330-00	RES M/F 0805 330K 5%
R258		036-16150-00	RES M/F 0805 150K 5%
R259		036-15220-00	RES M/F 0805 22K 5%
R260		036-15470-00	RES M/F 0805 47K 5%
R262		036-15470-00	RES M/F 0805 47K 5%
R263		036-14470-00	RES M/F 0805 4K7 5%
&R264	10	036-15220-00	RES M/F 0805 22K 5%
&R264	13	036-15220-00	RES M/F 0805 22K 5%
&R264	15	036-15270-00	RES M/F 0805 27K 5%
&R264	16	036-15220-00	RES M/F 0805 22K 5%
&R264	20	036-15220-00	RES M/F 0805 22K 5%
&R264	23	036-15220-00	RES M/F 0805 22K 5%
&R264	25	036-15270-00	RES M/F 0805 27K 5%
&R264	26	036-15220-00	RES M/F 0805 22K 5%

Ref	Var	IPN	Description
&R265	10	036-15150-00	RES M/F 0805 15K 5%
&R265	13	036-15150-00	RES M/F 0805 15K 5%
&R265	15	036-15180-00	RES M/F 0805 18K 5%
&R265	16	036-15150-00	RES M/F 0805 15K 5%
&R265	20	036-15150-00	RES M/F 0805 15K 5%
&R265	23	036-15150-00	RES M/F 0805 15K 5%
&R265	25	036-15180-00	RES M/F 0805 18K 5%
&R265	26	036-15150-00	RES M/F 0805 15K 5%
&R266	10	036-15470-00	RES M/F 0805 47K 5%
&R266	13	036-15470-00	RES M/F 0805 47K 5%
&R266	15	036-15560-00	RES M/F 0805 56K 5%
&R266	16	036-15470-00	RES M/F 0805 47K 5%
&R266	20	036-15470-00	RES M/F 0805 47K 5%
&R266	23	036-15470-00	RES M/F 0805 47K 5%
&R266	25	036-15560-00	RES M/F 0805 56K 5%
&R266	26	036-15470-00	RES M/F 0805 47K 5%
R267		036-14220-00	RES M/F 0805 2K2 5%
R268		036-13100-00	RES M/F 0805 100E 5%
R269		036-15100-00	RES M/F 0805 10K 5%
R270		036-14120-00	RES M/F 0805 1K2 5%
R271		036-17100-00	RES M/F 0805 1M 5%
R272		036-13560-00	RES M/F 0805 560E 5%
R273		036-15120-00	RES M/F 0805 12K 5%
R274		036-15150-00	RES M/F 0805 15K 5%
R275		036-14270-00	RES M/F 0805 2K7 5%
R277		036-16100-00	RES M/F 0805 100K 5%
R278		036-16120-00	RES M/F 0805 120K 5%
R279		036-17100-00	RES M/F 0805 1M 5%
R280		036-15100-00	RES M/F 0805 10K 5%
R282		036-15560-00	RES M/F 0805 56K 5%
R283		036-15560-00	RES M/F 0805 56K 5%
R284		036-17100-00	RES M/F 0805 1M 5%
R285		036-10000-00	RES M/F 0805 ZERO OHM
R286		036-14220-00	RES M/F 0805 2K2 5%
R287		036-15100-00	RES M/F 0805 10K 5%
R288		036-15150-00	RES M/F 0805 15K 5%
R289		036-16100-00	RES M/F 0805 100K 5%
&R290	10	036-13560-00	RES M/F 0805 560E 5%
&R290	13	036-13560-00	RES M/F 0805 560E 5%
&R290	15	036-13680-00	RES M/F 0805 680E 5%
&R290	16	036-13680-00	RES M/F 0805 680E 5%
&R290	20	036-13560-00	RES M/F 0805 560E 5%
&R290	23	036-13680-00	RES M/F 0805 680E 5%
&R290	25	036-13560-00	RES M/F 0805 560E 5%
&R290	26	036-13680-00	RES M/F 0805 680E 5%
R291		036-10000-00	RES M/F 0805 ZERO OHM
R292		036-14470-00	RES M/F 0805 4K7 5%
R293		036-15470-00	RES M/F 0805 47K 5%
R294		036-14470-00	RES M/F 0805 4K7 5%
R295		036-14270-00	RES M/F 0805 2K7 5%
R296		036-14100-00	RES M/F 0805 1K 5%
R297		036-14560-00	RES M/F 0805 5K6 5%
%R298		036-16100-00	RES M/F 0805 100K 5%
R299		036-14270-00	RES M/F 0805 2K7 5%
R302		036-15220-00	RES M/F 0805 22K 5%
R304		036-14270-00	RES M/F 0805 2K7 5%
R306		036-15100-00	RES M/F 0805 10K 5%
R308		036-16100-00	RES M/F 0805 100K 5%
R310		036-15220-00	RES M/F 0805 22K 5%
R312		036-14150-00	RES M/F 0805 1K5 5%
R314		036-13150-00	RES M/F 0805 150E 5%
R316		036-15100-00	RES M/F 0805 10K 5%
R318		036-14220-00	RES M/F 0805 2K2 5%
R320		036-14100-00	RES M/F 0805 1K 5%
R322		036-12220-00	RES M/F 0805 22E 5%
R324		036-13470-00	RES M/F 0805 470E 5%
R326		036-13470-00	RES M/F 0805 470E 5%
R328		036-13470-00	RES M/F 0805 470E 5%
R330		036-12220-00	RES M/F 0805 22E 5%
R332		036-15470-00	RES M/F 0805 47K 5%
R334		036-15100-00	RES M/F 0805 10K 5%
R336		036-14100-00	RES M/F 0805 1K 5%
R338		036-14100-00	RES M/F 0805 1K 5%
R340		036-16100-00	RES M/F 0805 100K 5%
R342		036-15150-00	RES M/F 0805 15K 5%
R344		036-15470-00	RES M/F 0805 47K 5%
R346		036-16120-00	RES M/F 0805 120K 5%
R348		036-14470-00	RES M/F 0805 4K7 5%
R350		036-14100-00	RES M/F 0805 1K 5%
R352		036-15150-00	RES M/F 0805 15K 5%
R354		036-15150-00	RES M/F 0805 15K 5%
R356		036-14100-00	RES M/F 0805 1K 5%
R359		030-53150-20	RES FILM AI 150E 5% 0.4W 4X1.6
R360		030-52390-20	RES FILM AI 39E 5% 0.4W 4X1.6
R362		030-53150-20	RES FILM AI 150E 5% 0.4W 4X1.6
R364		036-14150-00	RES M/F 0805 1K5 5%
R366		036-12470-00	RES M/F 0805 47E 5%
R368		036-15100-00	RES M/F 0805 10K 5%
R370		036-13560-00	RES M/F 0805 560E 5%
R372		036-14150-00	RES M/F 0805 1K5 5%
R374		036-13330-00	RES M/F 0805 330E 5%
R376		036-14100-00	RES M/F 0805 1K 5%
R378		030-53560-20	RES FILM AI 560E 5% 0.4W 4X1.6
R380		030-53180-20	RES FILM AI 180E 5% 0.4W 4X1.6
R382		030-53180-20	RES FILM AI 180E 5% 0.4W 4X1.6
R384		036-11330-00	RES M/F 0805 3E3 5%
R386		036-12470-00	RES M/F 0805 47E 5%
R388		030-53560-20	RES FILM AI 560E 5% 0.4W 4X1.6

Ref	Var	IPN	Description
R390		030-52120-20	RES M/F 12E 5% 4X1.6 0.2"
R392		030-53820-20	RES FILM AI 820E 5% 0.4W 4X1.6
R394		030-52120-20	RES M/F 12E 5% 4X1.6 0.2"
R396		030-53820-20	RES FILM AI 820E 5% 0.4W 4X1.6
R502		036-13330-00	RES M/F 0805 330E 5%
R505		036-15150-00	RES M/F 0805 15K 5%
R510		036-13680-00	RES M/F 0805 680E 5%
R515		036-12560-00	RES M/F 0805 56E 5%
R520		036-16120-00	RES M/F 0805 120K 5%
R525		036-15470-00	RES M/F 0805 47K 5%
R530		036-15220-00	RES M/F 0805 22K 5%
R535		036-15100-00	RES M/F 0805 10K 5%
R540		036-14220-00	RES M/F 0805 2K2 5%
R545		036-14470-00	RES M/F 0805 4K7 5%
R550		036-14470-00	RES M/F 0805 4K7 5%
R555		036-14470-00	RES M/F 0805 4K7 5%
R560		036-14270-00	RES M/F 0805 2K7 5%
R609		036-14100-00	RES M/F 0805 1K 5%
R613		036-13560-00	RES M/F 0805 560E 5%
R615		036-13100-00	RES M/F 0805 100E 5%
R617		036-10000-00	RES M/F 0805 ZERO OHM
R619		032-31100-00	RES M/F PWR 1E0 5% 1W 12X4.5MM
R621		032-31100-00	RES M/F PWR 1E0 5% 1W 12X4.5MM
R625		036-14100-00	RES M/F 0805 1K 5%
R629		032-33270-00	RES M/F PWR 270E 5% 1W 12X4.5
R633		036-14680-00	RES M/F 0805 6K8 5%
R637		036-12220-00	RES M/F 0805 22E 5%
R641		036-14150-00	RES M/F 0805 1K5 5%
R645		036-13470-00	RES M/F 0805 470E 5%
R649		036-14470-00	RES M/F 0805 4K7 5%
R653		036-15100-00	RES M/F 0805 10K 5%
R657		036-15100-00	RES M/F 0805 10K 5%
R661		036-15100-00	RES M/F 0805 10K 5%
R665		036-16100-00	RES M/F 0805 100K 5%
R669		036-15470-00	RES M/F 0805 47K 5%
R673		036-16100-00	RES M/F 0805 100K 5%
R677		036-15470-00	RES M/F 0805 47K 5%
R681		036-13100-00	RES M/F 0805 100E 5%
R685		036-15150-00	RES M/F 0805 15K 5%
R689		036-12100-00	RES M/F 0805 10E 5%
R693		036-16100-00	RES M/F 0805 100K 5%
R696		036-15560-00	RES M/F 0805 56K 5%
R701		036-12220-00	RES M/F 0805 22E 5%
R702		036-17100-00	RES M/F 0805 1M 5%
R703		036-17100-00	RES M/F 0805 1M 5%
R706		036-15150-00	RES M/F 0805 15K 5%
R708		036-16100-00	RES M/F 0805 100K 5%
R710		036-13100-00	RES M/F 0805 100E 5%
R711		036-13100-00	RES M/F 0805 100E 5%
R712		036-12100-00	RES M/F 0805 10E 5%
R713		036-10000-00	RES M/F 0805 ZERO OHM
R714		036-16470-00	RES M/F 0805 470K 5%
%R715		036-14100-00	RES M/F 0805 1K 5%
R717		036-14270-00	RES M/F 0805 2K7 5%
R718		036-15560-00	RES M/F 0805 56K 5%
R719		036-15560-00	RES M/F 0805 56K 5%
R720		036-15390-00	RES M/F 0805 39K 5%
R721		036-15100-00	RES M/F 0805 10K 5%
R722		036-15100-00	RES M/F 0805 10K 5%
R723		036-14270-00	RES M/F 0805 2K7 5%
R725		036-15390-00	RES M/F 0805 39K 5%
%R726		036-13100-00	RES M/F 0805 100E 5%
R727		036-15100-00	RES M/F 0805 10K 5%
R728		036-15100-00	RES M/F 0805 10K 5%
R742		036-13150-00	RES M/F 0805 150E 5%
R743		036-13150-00	RES M/F 0805 150E 5%
R744		036-12220-00	RES M/F 0805 22E 5%
R746		036-12220-00	RES M/F 0805 22E 5%
R747		036-12220-00	RES M/F 0805 22E 5%
R748		036-15470-00	RES M/F 0805 47K 5%
R749		036-15470-00	RES M/F 0805 47K 5%
R750		036-12220-00	RES M/F 0805 22E 5%
R752		036-12220-00	RES M/F 0805 22E 5%
R753		036-17100-00	RES M/F 0805 1M 5%
R754		036-14100-00	RES M/F 0805 1K 5%
R756		036-16470-00	RES M/F 0805 470K 5%
R757		036-16470-00	RES M/F 0805 470K 5%
R758		036-14120-00	RES M/F 0805 1K2 5%
R759		036-13330-00	RES M/F 0805 330E 5%
R760		036-13180-00	RES M/F 0805 180E 5%
R762		036-13100-00	RES M/F 0805 100E 5%
R763		036-13100-00	RES M/F 0805 100E 5%
R765		036-13680-00	RES M/F 0805 680E 5%
R766		036-14100-00	RES M/F 0805 1K 5%
R767		036-13680-00	RES M/F 0805 680E 5%
R769		036-13180-00	RES M/F 0805 180E 5%
R771		036-14820-00	RES M/F 0805 8K2 5%
R772		036-15220-00	RES M/F 0805 22K 5%
R774		036-14820-00	RES M/F 0805 8K2 5%
R775		036-14560-00	RES M/F 0805 5K6 5%
R777		036-14220-00	RES M/F 0805 2K2 5%
R784		036-12680-00	RES M/F 0805 68E 5%
R785		036-14330-00	RES M/F 0805 3K3 5%
R786		036-12100-00	RES M/F 0805 10E 5%
R787		036-12100-00	RES M/F 0805 10E 5%
R790		036-13220-00	RES M/F 0805 220E 5%
R791		036-13100-00	RES M/F 0805 100E 5%
R792		036-14100-00	RES M/F 0805 1K 5%

Copyright TEL

Ref	Var	IPN	Description	Ref	Var	IPN	Description
R801		036-16150-00	RES M/F 0805 150K 5%				
R802		036-15470-00	RES M/F 0805 47K 5%				
R808		036-12100-00	RES M/F 0805 10E 5%				
R809		036-14470-00	RES M/F 0805 4K7 5%				
R810		036-14470-00	RES M/F 0805 4K7 5%				
R811		036-14470-00	RES M/F 0805 4K7 5%				
R812		036-14470-00	RES M/F 0805 4K7 5%				
R813		036-14470-00	RES M/F 0805 4K7 5%				
R815		036-15470-00	RES M/F 0805 47K 5%				
R816		036-16150-00	RES M/F 0805 150K 5%				
R818		036-14470-00	RES M/F 0805 4K7 5%				
R819		036-14470-00	RES M/F 0805 4K7 5%				
R821		036-15470-00	RES M/F 0805 47K 5%				
R822		036-15470-00	RES M/F 0805 47K 5%				
R824		036-14220-00	RES M/F 0805 2K2 5%				
R825		036-14220-00	RES M/F 0805 2K2 5%				
R826		036-14220-00	RES M/F 0805 2K2 5%				
R827		036-14220-00	RES M/F 0805 2K2 5%				
R828		036-14220-00	RES M/F 0805 2K2 5%				
R829		036-14220-00	RES M/F 0805 2K2 5%				
R830		036-14220-00	RES M/F 0805 2K2 5%				
R831		036-14220-00	RES M/F 0805 2K2 5%				
R832		036-14220-00	RES M/F 0805 2K2 5%				
R833		036-14220-00	RES M/F 0805 2K2 5%				
R835		036-14220-00	RES M/F 0805 2K2 5%				
R836		036-14220-00	RES M/F 0805 2K2 5%				
R837		036-14220-00	RES M/F 0805 2K2 5%				
R840		036-14220-00	RES M/F 0805 2K2 5%				
R841		036-14220-00	RES M/F 0805 2K2 5%				
R842		036-14220-00	RES M/F 0805 2K2 5%				
R843		036-14220-00	RES M/F 0805 2K2 5%				
R845		036-13470-00	RES M/F 0805 470E 5%				
R846		036-13470-00	RES M/F 0805 470E 5%				
R847		036-13470-00	RES M/F 0805 470E 5%				
R848		036-14470-00	RES M/F 0805 4K7 5%				
R849		036-13470-00	RES M/F 0805 470E 5%				
R850		036-13470-00	RES M/F 0805 470E 5%				
R853		036-14470-00	RES M/F 0805 4K7 5%				
R854		036-14470-00	RES M/F 0805 4K7 5%				
R855		036-14470-00	RES M/F 0805 4K7 5%				
R859		036-16150-00	RES M/F 0805 150K 5%				
R861		036-16150-00	RES M/F 0805 150K 5%				
R863		036-16150-00	RES M/F 0805 150K 5%				
R865		036-16100-00	RES M/F 0805 100K 5%				
R867		036-16100-00	RES M/F 0805 100K 5%				
R871		036-15470-00	RES M/F 0805 47K 5%				
R872		036-14470-00	RES M/F 0805 4K7 5%				
R873		036-15330-00	RES M/F 0805 33K 5%				
R874		036-14470-00	RES M/F 0805 4K7 5%				
R875		036-15470-00	RES M/F 0805 47K 5%				
R876		036-14470-00	RES M/F 0805 4K7 5%				
R877		036-14470-00	RES M/F 0805 4K7 5%				
R879		036-15100-00	RES M/F 0805 10K 5%				
RV210		040-05100-23	POT 10K LOG PCB 15MM SLOT SFT				
RV220		042-05470-07	RES PRE 47K CAR 6MM FLAT D/ADJ				
RV805		042-05220-07	RES PRE 22K CAR 6MM FLAT D/ADJ				
SK200		240-10000-05	CONN SMD SKT 8W 2R M-MATCH				
SK205		240-02020-05	SKT STEREO PHONE JACK PCB MTG				
SK310		240-02100-44	SKT COAX MINI JACK PCB MT ANG.				
SK420		240-02100-44	SKT COAX MINI JACK PCB MT ANG.				
SK501		240-04021-77	SKT JACK 1.3 PCB MT 64W				
SK502		240-04021-77	SKT JACK 1.3 PCB MT 64W				
SK503		240-04021-77	SKT JACK 1.3 PCB MT 64W				
SK504		240-04021-77	SKT JACK 1.3 PCB MT 64W				
SK505		240-04021-77	SKT JACK 1.3 PCB MT 64W				
SK513		240-04021-77	SKT JACK 1.3 PCB MT 64W				
SK522		240-04021-77	SKT JACK 1.3 PCB MT 64W				
SK531		240-04021-77	SKT JACK 1.3 PCB MT 64W				
SK532		240-04021-77	SKT JACK 1.3 PCB MT 64W				
SK533		240-04021-77	SKT JACK 1.3 PCB MT 64W				
SK534		240-04021-77	SKT JACK 1.3 PCB MT 64W				
SK535		240-04021-77	SKT JACK 1.3 PCB MT 64W				
SK805		240-10000-07	CONN SMD SKT 16W 2R M-MATCH				
SK810		240-04020-42	SKT 44 PIN SMD PLCC				
SW230		232-00010-26	SWITCH PUSH SPDT R-ANG PCB MTG				
T210		053-00010-17	XFMR T4030 LINE MATCH POTCORE				
T610		050-00016-50	COIL TAIT NO 650 455KHZ				

T837 Mechanical & Miscellaneous Parts (220-01390-03)

IPN	Legend	Description
070-01001-00	25	D-RANGE 15 WAY COMPL T800 PL100
219-02610-00		COAX 220MM 2 MINI PIN CRIMP Connects SK310 to SK420.
220-01176-03	1	PCB T83X VCO
220-01390-03	2	PCB T837 EXCITER
232-00020-26	3	BUTTON 232-00010-26 SWITCH
240-02100-06	4	SKT COAX N TYPE PNL MTG OP-TER
240-04020-62		SKT 2 W RECEP SHORTING LINK PL205/210/215/220.
303-11169-04	5	CHASSIS PAINTED T800 SER II
303-23118-00	6	COVER A3M2247 D RANGE
303-50074-00	7	CLIP A3M2246 SPRING CLAMP
303-50078-00	8	CLIP A4M2630 SPR. CABLE CLAMP
308-01007-01	9	HANDLE BASE STATION SERIES II
312-01052-02	10	LID TOP T800 SER II PTND
312-01053-02	11	LID BOTTOM T800 SER II PNTD
316-06619-00	12	PNL FRT EX NO EX OUT SER II
345-00040-10	14	SCRW M3X6MM P/POZ ST BZ
349-00020-36	15	SCREW TT M3X8m PANTORX BLK
349-00020-43	16	SCRW T/T M4X12MM P/POZ BZ
349-00020-45	17	SCRW T/T M4X20MM P/POZ BZ
350-00016-42	18	SPACER 5MM HI 8MM ST 2.5MM HO
352-00010-08	19	NUT M3 COLD FORM HEX ST BZ
352-00010-29	20	NUT M4 NYLOC HEX
353-00010-10	21	WSHR M3 FLAT 7MMX0.6MM ST BZ
353-00010-13	22	WSHR M3 S/PROOF INT BZ
353-00010-24		WSHR M4X8MM FLAT Fitted under handle lock nuts.
362-00010-23	23	GASKET SIL TO-220 CLIP MTG.
362-00010-33	24	GROMMET LED MTG 3MM
362-01101-00		GASKET INSUL SIL PAD 2000 TO5 Under Q370.
365-00100-09		LABEL WHITE VINYL 15X11MM S/A
365-00100-20		LABEL WHITE S/A 28X11MM
365-01541-00		LABEL TX/RX/EX TYPE APR/SER NO
400-00020-07		SLEEVING 2MM SIL RUBBER
410-01081-01		CRT T800 SERIES II

 Copyright TEL

replace A4 pages C6.3.33/C6.3.34 with A3 pages C6.3.33/C6.3.34

replace A4 pages C6.3.33/C6.3.34 with A3 pages C6.3.33/C6.3.34

Copyright TEL

T837 Grid Reference Index (IPN 220-01390-03)

How To Use This Grid Reference Index

The first digit in the PCB layout reference is a "1" or "2", indicating the top or bottom side layout respectively, and the last two characters give the location of the component on that diagram.

The first digit in the circuit diagram reference is the sheet number, and the last two characters give the location of the component on that sheet.

Device	PCB	Circuit
C201	1:C1	2-B8
C202	1:C1	2-C8
C204	1:A2	2-E8
C205	1:A2	2-E8
C207	1:C7	2-B6
C209	1:C6	2-D6
C210	1:C7	2-H0
C211	1:B7	2-F8
C213	1:B6	2-G8
C215	1:B6	2-G8
C217	1:C6	2-H8
C219	1:C6	2-H7
C221	1:D5	2-G6
C223	1:C5	2-J6
C225	1:C3	2-K7
C227	1:B4	2-K7
C229	1:B3	2-L7
C230	1:B4	2-H0
C232	1:A4	2-M7
C233	1:A5	2-N7
C235	1:B5	2-K5
C237	1:C4	2-K5
C239	1:C4	2-L4
C241	1:B4	2-M6
C242	1:B3	2-L6
C243	1:B4	2-P6
C245	1:C5	2-A4
C247	1:D4	2-B4
C249	1:D4	2-C4
C251	1:C3	2-E4
C253	1:D3	2-E3
C255	1:D3	2-D2
C257	1:D3	2-F2
C259	1:C6	2-J2
C260	1:D8	2-G0
C261	1:C6	2-K2
C263	1:D6	2-L3
C265	1:D6	2-N4
C267	1:C8	2-P3
&C269	1:C8	2-P3
C271	1:C8	2-Q3
C273	1:C8	2-Q4
C275	1:D3	2-E1
C277	1:C4	2-G1
C279	1:B4	2-G1
C281	1:B5	2-J1
C283	1:B5	2-K0
C285	1:D7	2-L0
C287	1:C6	2-M1
C289	1:C8	2-N1
C291	1:D7	2-P1
C293	1:D7	2-Q1
%C294	1:D7	2-Q0
%C295	1:D6	2-Q0
C304	2:F7	3-A8
C308	2:F7	3-C8
C312	2:F7	3-D8
C316	2:E8	3-D9
C317	2:F8	3-E8

Device	PCB	Circuit
C318	2:F8	3-F9
C320	2:F7	3-G8
C324	2:F8	3-H9
C330A	2:F8	3-N8
C330B	1:F8	3-N8
C332	2:E4	3-B5
C334	2:E4	3-D4
C336	2:E4	3-D6
C338	2:E5	3-F5
C340	2:E5	3-F5
C342	2:E4	3-G6
C344	2:E5	3-J5
C346	2:E6	3-J6
C349	2:F4	3-C2
C350	2:F4	3-E3
C353	2:F4	3-D0
C356	2:E4	3-F1
C359	2:E5	3-F1
C362	2:F4	3-G2
C365	2:F4	3-G2
C368	2:F5	3-H2
C370	2:F5	3-K3
C373	1:E6	3-L4
C376	2:F8	3-L4
C379	2:F5	3-K3
C382	2:E5	3-L2
C385	1:F6	3-P4
C388	2:F7	3-P4
C391	2:E6	3-P2
C394	2:E6	3-P3
C396	2:E6	3-Q3
C399	2:E5	3-R4
C503	1:K6	5-L9
C505	1:K6	5-M6
C510	1:J5	5-C0
C513	1:H5	5-G2
C535	1:K5	5-M2
C550	1:K4	5-L0
C605	1:L6	6-D8
C610A	1:M5	6-F8
C610B	1:M5	6-G8
C611A	1:L5	6-H8
C611B	1:M5	6-J8
C623	1:M6	6-N8
C625	1:M6	6-Q8
C626	1:M6	6-R8
C628	1:M6	6-R8
C630	1:M5	6-K5
C631A	1:M5	6-M6
C634	1:N5	6-M5
C636	1:M5	6-M5
C638	1:M6	6-P6
C640	1:M5	6-R6
C655	1:M4	6-C1
C660	1:L5	6-K1
C665	1:L5	6-K1
C670	1:L6	6-L1
C673	1:L5	6-P2
C677	1:L6	6-P1

Device	PCB	Circuit
C681	1:M5	6-R3
C684	1:M5	6-R3
C687	1:L6	6-Q1
C690	1:L6	6-R1
C693	1:L6	6-R1
C700	1:K4	7-A8
C703	1:J3	7-B7
C705	1:J3	7-B7
C706	1:J2	7-B5
%C707	1:K4	7-C8
C708	1:J2	7-C9
C709	1:K4	7-D9
C710	1:J3	7-E8
C712	1:H2	7-E7
%C713	1:H2	7-E6
C720	1:J3	7-F8
C722	1:J4	7-G8
C724	1:J4	7-H6
C725	1:J4	7-J6
C726	1:K4	7-J6
C727	1:J3	7-J8
C729	1:H3	7-M8
%C733	1:J3	7-M5
C735	1:J2	7-A1
C736	1:J2	7-B1
C740A	1:H2	7-B4
C740B	1:H2	7-B3
C741A	1:H2	7-C4
C741B	1:G2	7-C3
C742A	1:H2	7-D4
C742B	1:H3	7-D3
C743	1:H2	7-B1
C745	1:G3	7-D1
C750	1:H4	7-Q7
C757	1:G4	7-F5
C759	1:G4	7-G4
C761	1:G3	7-J4
C762	1:G3	7-K4
C764	1:H3	7-J2
C765	1:G3	7-K2
C767	1:H3	7-K3
C769	1:H4	7-N4
C770	1:H4	7-N4
C772	1:G4	7-N2
C774	1:H4	7-P2
C776	1:H4	7-N1
C782	1:G2	7-N1
C784	1:G2	7-Q1
C786	1:G2	7-R1
C788	1:G3	7-P0
C790	1:G3	7-Q0
C792	1:G3	7-Q1
C810	1:L3	8-K8
C812	1:L2	8-F5
C813	1:K2	8-H5
C822	1:M2	8-B2
C823	1:M3	8-C2
C824	1:M2	8-C1
C826	1:N3	8-C0

Device	PCB	Circuit
C827	1:N3	8-D0
C828	1:N3	8-E0
C830	1:N3	8-R1
C838	1:N4	8-F0
C841	1:N2	8-K2
C844	1:M2	8-L2
C910	1:P7	9-E6
C920	1:P7	9-F6
C930	1:P6	9-G6
D111	1:P4	1-R1
#D205	1:B2	2-D9
#D210	1:B2	2-E9
D220	1:B4	2-P7
D220	1:B4	2-P6
D230	1:B7	2-R5
D240	1:D4	2-C4
D240	1:D4	2-B2
D250	1:D3	2-E2
D250	1:D3	2-D3
D260	1:C2	2-C2
D260	1:C2	2-C2
D270	1:D2	2-C1
D270	1:D2	2-C1
D340	2:F4	3-D2
D350	2:F4	3-E2
D360	2:F4	3-E2
D610	1:N6	6-L6
D610	1:N6	6-K6
D620	1:N4	6-B1
D620	1:N4	6-B2
D630	1:M5	6-G2
D630	1:M5	6-G3
D635	1:M4	6-G3
D640	1:L5	6-M1
D640	1:L5	6-M2
D710	1:J3	7-L8
D710	1:J3	7-L8
D720	1:H3	7-P8
D720	1:H3	7-P8
D730	1:H3	7-H1
D730A	1:H3	7-K1
D740	1:H3	7-K2
D740A	1:H3	7-K1
D810	1:M2	8-B7
D810A	1:M2	8-B7
IC210	1:C7	2-H0
IC210	1:C7	2-Q0
IC210	1:C7	2-K2
IC210	1:C7	2-L1
IC210	1:C7	2-C6
IC220	1:D6	2-P0
IC220	1:D6	2-M3
IC220	1:D6	2-D5
IC230	1:B4	2-G0
IC230	1:B4	2-J0
IC230	1:B4	2-L5
IC230	1:B4	2-N6

Copyright TEL

Device	PCB	Circuit
IC230	1:B4	2-G1
IC240	1:D4	2-F3
IC250	1:D3	2-E1
IC260	1:D8	2-N0
IC260	1:D8	2-F0
IC260	1:D8	2-Q2
IC260	1:D8	2-Q3
IC260	1:D8	2-N3
IC330	1:E8	3-M0
IC330	1:E8	3-E9
IC330	1:E8	3-M8
IC610	1:M5	6-G8
IC630	1:N5	6-K5
IC640	1:M5	6-F1
IC640	1:M5	6-R6
IC640	1:M5	6-N6
IC650	1:L5	6-F4
=IC700	1:K3	7-A8
IC710	1:J2	7-E8
IC710	1:J2	7-C6
IC710	1:J2	7-G0
IC710	1:J2	7-D6
IC710	1:J2	7-D7
IC710	1:J2	7-D6
IC710	1:J2	7-C6
IC720	1:J3	7-P6
IC720	1:J3	7-J0
IC720	1:J3	7-N7
IC720	1:J3	7-M7
IC720	1:J3	7-K7
IC720	1:J3	7-F8
IC720	1:J3	7-K0
IC730	1:J4	7-H8
IC730	1:J4	7-G7
IC740	1:H2	7-D1
IC750	1:H4	7-N3
IC750	1:H4	7-H5
IC750	1:H4	7-Q7
IC820	1:L4	8-N2
IC830	1:N3	8-J0
IC830	1:N3	8-Q1
IC830	1:N3	8-J0
IC830	1:N3	8-J1
IC830	1:N3	8-C0
L335	1:F4	3-E3
L340	1:E4	3-F2
L345	1:F5	3-H2
L350	1:F5	3-H2
L355	1:F5	3-J3
L360	1:F5	3-K3
L365	1:E5	3-L3
L370	1:E5	3-M2
L375	1:E6	3-M4
L380	1:F6	3-N4
L385	1:F6	3-N3
L390	1:E6	3-R4
L750	1:G4	7-R0
L910	1:P7	9-F7
L920	1:P7	9-G7
P100	1:P6	1-R8
P150	1:P2	1-Q4
P160	1:P2	1-Q4
P170	1:P2	1-Q3
P204	1:D1	2-A8
P208	1:D1	2-A8
P215	1:D4	2-A2
P217	1:D4	2-A2
P219	1:D2	2-A1
P225	1:D2	2-A0
P230	1:C5	2-B0
P231	1:D8	2-B0
P233	1:C1	2-R9
P235	1:C1	2-R9
P237	1:B7	2-R8

Device	PCB	Circuit
P239	1:C7	2-R8
P240	1:C7	2-R8
P243	1:B7	2-R7
P244	1:B7	2-R7
P245	1:B8	2-R6
P247	1:B8	2-R6
P248	1:B7	2-R6
P249	1:C7	2-R5
P251	1:C7	2-R5
P255	1:D4	2-R4
P257	1:C2	2-R4
P259	1:B8	2-R3
P261	1:B8	2-R3
P263	1:B2	2-R2
P267	1:C8	2-N2
P269	1:D8	2-P2
P271	1:C9	2-N1
P273	1:D9	2-P0
P275	1:D7	2-Q0
P290	1:D5	2-F0
P291	1:D5	2-F0
P805	1:M2	8-A7
P810	1:L3	8-A5
P820	1:L4	8-M8
P825	1:L4	8-M8
P830	1:L4	8-M8
P835	1:L4	8-M7
P840	1:L4	8-M7
PL100	1:P3	1-F0
PL205	1:C5	2-J8
PL210	1:C3	2-H4
PL215	1:C4	2-K3
PL220	1:C4	2-H2
Q210	1:C6	2-J8
Q220	1:B3	2-L7
Q230	1:A4	2-M8
Q240	1:B7	2-Q7
Q250	1:B7	2-R5
Q260	1:C4	2-F3
Q270	1:D2	2-D1
Q305	2:E7	3-B8
Q310	2:F8	3-G8
Q315	1:F8	3-J8
Q320	2:E5	3-A5
Q325	2:E4	3-C5
Q330	2:E4	3-D4
Q335	2:E4	3-E6
Q340	2:E5	3-G6
Q345	2:E5	3-H6
Q365	1:F5	3-J2
Q370	1:E5	3-N3
Q510	1:J5	5-D1
Q520	1:J5	5-H2
Q530	1:J5	5-H0
Q540	1:K5	5-L2
Q550	1:K5	5-L0
Q610	1:L6	6-E8
Q620	1:N6	6-P8
Q630	1:M6	6-P5
Q660	1:L5	6-N1
Q670	1:L6	6-Q2
Q710	1:J3	7-K8
Q720	1:J3	7-K8
Q730	1:H3	7-N8
Q740	1:H3	7-N8
Q750	1:G4	7-F3
Q760	1:H3	7-H3
Q770	1:H3	7-H1
Q775	1:H3	7-K3
Q780	1:H3	7-K3
Q785	1:H3	7-K2
Q790	1:H4	7-M3
Q795	1:G3	7-P1
Q810	1:M2	8-E7

Device	PCB	Circuit
Q820	1:L2	8-D5
Q830	1:L2	8-D5
Q840	1:L2	8-F5
Q850	1:M2	8-G5
Q860	1:L4	8-B3
%R150	1:P2	1-R4
R160	1:P2	1-R3
%R200	1:B2	2-D9
R201	1:B2	2-E9
R202	1:C1	2-F9
%R203	1:B3	2-D8
R204	1:C7	2-B6
R205	1:C7	2-D6
R206	1:B7	2-G8
R207	1:B6	2-G8
R208	1:B6	2-G8
R209	1:C6	2-H8
R210	1:B6	2-H7
R212	1:D4	2-F6
R213	1:C4	2-G6
R214	1:D4	2-G6
R215	1:C4	2-H6
R216	1:C3	2-K7
R217	1:A4	2-M8
R218	1:A4	2-N7
R219	1:B4	2-N8
R221	1:B7	2-R7
R223	1:B4	2-K6
R224	1:C4	2-K5
R225	1:B4	2-L5
R226	1:B4	2-L4
R227	1:B4	2-M4
R229	1:B4	2-M7
R230	1:B4	2-M6
R231	1:B4	2-M6
R232	1:B4	2-M5
R233	1:B4	2-M6
R235	1:B4	2-P6
R237	1:B7	2-Q7
R238	1:B7	2-R7
R239	1:B8	2-R6
R241	1:B8	2-Q6
R242	1:B7	2-Q5
R244	1:C6	2-A5
R245	1:D4	2-D4
R247	1:D3	2-E4
R248	1:C3	2-E3
R249	1:D4	2-F3
R251	1:C4	2-G4
R253	1:C6	2-J2
R254	1:C6	2-K3
R255	1:C7	2-K2
R256	1:D8	2-M3
R257	1:D8	2-N5
R258	1:D8	2-N4
R259	1:D6	2-P4
R260	1:D8	2-N4
R262	1:D8	2-N3
R263	1:C8	2-P3
&R264	1:C8	2-P3
&R265	1:C8	2-P3
&R266	1:C8	2-P3
R267	1:C8	2-R2
R268	1:D2	2-C0
R269	1:C2	2-C1
R270	1:C2	2-D1
R271	1:C3	2-E1
R272	1:C4	2-F2
R273	1:B5	2-G2
R274	1:C4	2-G1
R275	1:C4	2-H0
R277	1:B5	2-J1
R278	1:B5	2-J0
R279	1:B5	2-K0
R280	1:B5	2-K0

Device	PCB	Circuit
R282	1:D7	2-K1
R283	1:D7	2-L1
R284	1:D7	2-L0
R285	1:C8	2-M0
R286	1:C7	2-M0
R287	1:D9	2-M0
R288	1:C6	2-M2
R289	1:D9	2-M0
R290	1:C8	2-N2
R291	1:C8	2-N1
R292	1:D8	2-Q2
R293	1:D9	2-Q2
R294	1:D9	2-Q1
R295	1:D8	2-R1
R296	1:D6	2-P0
R297	1:D7	2-P1
%R298	1:D7	2-Q0
R299	1:C7	2-R0
R302	2:F7	3-A7
R304	2:E7	3-B7
R306	2:F7	3-C8
R308	2:E8	3-C9
R310	2:F8	3-C9
R312	2:F8	3-D8
R314	2:F8	3-D7
R316	2:F8	3-E8
R318	2:F8	3-E9
R320	2:F8	3-G9
R322	2:F8	3-H8
R324	2:F7	3-J8
R326	2:F7	3-J7
R328	2:F7	3-K8
R330	2:F8	3-M8
R332	2:E4	3-C5
R334	2:E4	3-D6
R336	2:E4	3-D5
R338	2:E4	3-D4
R340	2:E5	3-D5
R342	2:E4	3-F5
R344	2:E5	3-F6
R346	2:E5	3-F6
R348	2:E5	3-G5
R350	2:E5	3-H5
R352	2:E6	3-J6
R354	2:E5	3-J6
R356	2:E6	3-K6
R359	1:F5	3-B2
R360	1:F4	3-C2
R362	1:F4	3-C2
R364	2:F4	3-D2
R366	2:F4	3-D1
R368	2:F4	3-D0
R370	2:F4	3-E1
R372	2:E5	3-G1
R374	2:F5	3-J2
R376	2:F5	3-J2
R378	1:F5	3-J3
R380	1:F5	3-J4
R382	1:F5	3-J4
R384	2:E6	3-L4
R386	2:E6	3-L2
R388	1:F6	3-M4
R390	1:E6	3-Q3
R392	1:E6	3-P2
R394	1:E6	3-Q3
R396	1:E6	3-Q2
R502	1:K6	5-K9
R505	1:K6	5-L8
R510	1:K6	5-L7
R515	1:H6	5-J5
R520	1:J5	5-C1
R525	1:J5	5-D1
R530	1:J5	5-D0
R535	1:J5	5-E1
R540	1:K5	5-H2
R545	1:K5	5-J1

Copyright TEL

Device	PCB	Circuit
R550	1:K5	5-K2
R555	1:K5	5-K1
R560	1:K5	5-M0
R609	1:L6	6-B8
R613	1:L6	6-C8
R615	1:M5	6-F9
R617	1:M5	6-J8
R619	1:M6	6-L8
R621	1:M6	6-L8
R625	1:N6	6-L7
R629	1:M5	6-P6
R633	1:M5	6-Q8
R637	1:N5	6-K6
R641	1:N5	6-L5
R645	1:N5	6-L5
R649	1:M5	6-M5
R653	1:M5	6-Q5
R657	1:M5	6-D1
R661	1:M5	6-E3
R665	1:M5	6-E2
R669	1:M5	6-E2
R673	1:M5	6-E0
R677	1:M4	6-F4
R681	1:L5	6-L2
R685	1:L5	6-N2
R689	1:L6	6-Q3
R693	1:L6	6-Q1
R696	1:M6	6-Q1
R701	1:K4	7-A9
R702	1:K4	7-C9
R703	1:J3	7-C8
=R705	1:K3	7-A7
R706	1:J3	7-B6
R708	1:H3	7-C7
R710	1:H2	7-E7
R711	1:J2	7-B6
R712	1:J3	7-D9
R713	1:J4	7-F8
R714	1:J3	7-B6
%R715	1:K4	7-H6
R717	1:J4	7-H7
R718	1:J4	7-H7
R719	1:J4	7-J7
R720	1:J3	7-K7
R721	1:J3	7-K9
R722	1:J3	7-K8
R723	1:H3	7-M7
R725	1:J4	7-N7
%R726	1:J3	7-N6
R727	1:H3	7-N9
R728	1:H3	7-N8
R742	1:H2	7-B4
R743	1:H2	7-C5
R744	1:G2	7-D4
R746	1:H3	7-E4
R747	1:H3	7-E5
R748	1:J2	7-A1
R749	1:J2	7-B1
R750	1:H4	7-Q7
R752	1:G4	7-F5
R753	1:G4	7-F3
R754	1:G3	7-F3
R756	1:G3	7-G5
R757	1:G4	7-G4
R758	1:H3	7-H4
R759	1:H3	7-J4
R760	1:H3	7-K4
R762	1:H3	7-K4
R763	1:H4	7-L4
R765	1:H3	7-H2
R766	1:G3	7-J3
R767	1:H3	7-K2
R769	1:H3	7-L3
R771	1:H4	7-M3
R772	1:G4	7-M2
R774	1:H4	7-M2

Device	PCB	Circuit
R775	1:H4	7-N2
R777	1:H4	7-R2
R784	1:G3	7-P1
R785	1:G3	7-Q1
R786	1:G2	7-Q1
R787	1:G2	7-R2
R790	1:G3	7-P0
R791	1:G3	7-Q0
R792	1:G3	7-Q0
R801	1:M2	8-D7
R802	1:M2	8-D7
R808	1:L2	8-B4
R809	1:L2	8-D5
R810	1:L2	8-D6
R811	1:L2	8-E6
R812	1:L2	8-D5
R813	1:L2	8-D4
R815	1:L2	8-F4
R816	1:L2	8-F4
R818	1:M2	8-F5
R819	1:M2	8-F5
R821	1:M4	8-B3
R822	1:M4	8-E3
R824	1:L4	8-L8
R825	1:L4	8-L8
R826	1:L4	8-L8
R827	1:L4	8-L7
R828	1:L4	8-L7
R829	1:L4	8-P9
R830	1:L3	8-P9
R831	1:L3	8-P9
R832	1:L3	8-P8
R833	1:L3	8-P8
R835	1:L3	8-P8
R836	1:L3	8-P8
R837	1:L3	8-P7
R840	1:L3	8-P7
R841	1:L3	8-P7
R842	1:L3	8-P6
R843	1:L3	8-P6
R845	1:M4	8-Q5
R846	1:K2	8-Q4
R847	1:K2	8-Q4
R848	1:L2	8-J4
R849	1:M4	8-Q3
R850	1:K2	8-Q4
R853	1:M4	8-N3
R854	1:M4	8-N3
R855	1:M2	8-B0
R859	1:N2	8-C1
R861	1:N2	8-D1
R863	1:N3	8-E1
R865	1:N4	8-E0
R867	1:N3	8-E1
R871	1:N3	8-G2
R872	1:M4	8-H1
R873	1:N3	8-G1
R874	1:N3	8-H0
R875	1:N3	8-G0
R876	1:N3	8-H0
R877	1:M2	8-K2
R879	1:N2	8-L3
RV210	1:B7	2-F9
RV220	1:A4	2-M6
RV805	1:N4	8-F1
SK200	1:D5	2-E1
SK205	1:B5	2-A5
SK310	1:E7	3-R3
SK420	1:M8	1-M8
SK501	1:G6	5-D6
SK502	1:G6	5-D5
SK503	1:G6	5-D4
SK504	1:G5	5-D3
SK505	1:G5	5-D2

Device	PCB	Circuit
SK513	1:H5	5-H3
SK522	1:H6	5-K5
SK531	1:K6	5-N6
SK532	1:K5	5-N5
SK533	1:K5	5-N4
SK534	1:K5	5-N3
SK535	1:K5	5-N2
=SK710	1:K3	7-A7
SK805	1:K3	8-Q9
SK805	1:K3	8-Q7
SK805	1:K3	8-Q5
SK805	1:K3	8-Q7
SK805	1:K3	8-Q8
SK805	1:K3	8-Q7
SK805	1:K3	8-Q8
SK805	1:K3	8-Q6
SK805	1:K3	8-Q8
SK805	1:K3	8-Q6
SK805	1:K3	8-Q6
SK805	1:K3	8-Q9
SK805	1:K3	8-Q6
SK805	1:K3	8-Q9
SK805	1:K3	8-Q7
SK805	1:K3	8-Q8
SK810	1:M3	8-H5
SL201	2:D1	2-B9
SL202	2:D1	2-B8
SL203	2:D2	2-B2
SL204	2:D2	2-B1
SL320	1:E4	3-E4
SL501	2:J5	5-F0
SL810	1:M2	8-C7
SW230	1:B8	2-B4
T210	1:B2	2-C8
T610	1:L5	6-N2
TP206	1:C5	2-H7
TP305	2:E6	3-L6
TP308	1:E5	3-G6
TP601	1:N5	6-K9
TP602	1:L6	6-R9
TP603	1:L5	6-J2
TP604	1:L5	6-M6
TP607	1:L4	6-J9
TP710	1:H4	7-H5
TP715	1:J2	7-C6

Device	PCB	Circuit

Copyright TEL

Part D T838 & T839 Power Amplifiers

Caution: **There are no user serviceable components in these power amplifiers. Refer all servicing to your nearest Tait Dealer or Customer Service Organisation.**

This part of the manual is divided into five sections, as listed below. There is a detailed table of contents at the start of each section.

Section	Title
1	General Information
2	Circuit Operation
3	Initial Adjustment
4	Fault Finding
5	PCB Information

Copyright TEL

1 T838/839 General Information

This section provides a brief description of the T838/839 PA, along with detailed specifications and a list of types available.

The following topics are covered in this section.

Section	Title	Page
1.1	**Introduction**	**1.5**
1.2	**Specifications**	**1.6**
1.2.1	Introduction	1.6
1.2.2	General	1.6
1.2.3	Test Standards	1.7
1.2.3.1	European Telecommunication Standard (ETS)	1.7
1.2.3.2	DTI CEPT Recommendation T/R-24-01	1.8
1.2.3.3	Telecommunications Industry Association	1.8
1.3	**Product Codes**	**1.9**
1.4	**Standard Product Range**	**1.10**

Figure	Title	Page
1.1	T838/839 Main Circuit Block Identification	1.4
1.2	T838/839 Front Panel Controls	1.4

Copyright TEL

replace A4 pages D1.3/D1.4 with A3 pages D1.3/D1.4

replace A4 pages D1.3/D1.4 with A3 pages D1.3/D1.4

Copyright TEL

1.1 Introduction

The T838 & T839 are FM base station power amplifiers designed for single or multichannel operation in the 136 to 174MHz frequency range. The typical output power capabilities are as follows:

T838 -	10 to 60W
T839 -	20 to 120W.

The T838 PA comprises a single broad band RF power module whose output is filtered before being fed to the output socket.

The T839 PA comprises two broad band RF power modules whose outputs are recombined (using a quadrature hybrid combiner) and filtered before being fed to the output socket. This dual module design enables the transmitter to produce at least one quarter of its rated power if one of the modules fails.

VSWR and thermal protection is incorporated into the basic design, while monitoring and alarm signals are available for both forward and reverse power. The output power is adjustable from the front panel.

The main PCB is mounted directly on a die-cast chassis/heatsink. Extensive use is made of the latest surface mount technology. Effective RF isolation between the PA control circuitry and RF stages is achieved by internal metal shields.

Forced air cooling for the heatsink is provided on the T839 by a fan, which is activated whenever the transmitter is keyed. Thermal sensors will also activate the fan automatically if the internal temperature reaches an unacceptable level.

The T838 has a width of 60mm and occupies a single space in a Tait rack frame, which has the ability to accommodate up to seven standard modules. The T839 has a width of 120mm and occupies a double space.

1.2 Specifications

1.2.1 Introduction

The performance figures given are minimum figures, unless otherwise indicated, for equipment operating at standard room temperature (+22°C to +28°C) and standard test voltage (13.8V DC).

Where applicable, the test methods used to obtain the following performance figures are those described in the ETS specification. Refer to Section 1.2.3 for details of test standards.

Details of test methods and the conditions which apply for Type Approval testing in all countries can be obtained from Tait Electronics Ltd.

1.2.2 General

Power Output:

T838	- Rated Power	..	50W
	- Range Of Adjustment	..	10 to 60W (typical)
T839	- Rated Power	..	100W
	- Range Of Adjustment	..	20 to 120W (typical)

Input Power	..	600mW to 1W

Duty Cycle Rating:

T838	..	50W continuous to +60°C
T839	..	100W continuous to +60°C

Intermodulation (PA with output isolator)	..	-70dBc or -40dBi[1] with 25dB isolation & interfering signal of -30dBc

Mismatch Capability:

Ruggedness	..	refer to your nearest Tait Dealer or Customer Service Organisation
Stability	..	5:1 VSWR (all phase angles)

Supply Voltage:

Operating Voltage	..	10.8 to 16V DC
Standard Test Voltage	..	13.8V DC
Polarity	..	negative earth only
Polarity Protection	..	crowbar diode

1. dBi denotes the level of the intermodulation product relative to the interfering signal.

 Copyright TEL

Supply Current:

Standby		..	50mA
Transmit	- T838	..	11A (9A typical @ 156MHz)
	- T839	..	19A (15A typical @ 156MHz)

Spurious Emissions:

Conducted	- Transmit	..	-36dBm to 1GHz -30dBm to 4GHz
	- Standby	..	-57dBm to 1GHz -47dBm to 4GHz
Radiated	- Transmit	..	-36dBm to 1GHz -30dBm to 4GHz
	- Standby	..	-57dBm to 1GHz -47dBm to 4GHz

Operating Temperature Range .. -30°C to +60°C

Dimensions:

Height		..	183mm
Width	- T838	..	60mm
	- T839	..	120mm
Length		..	340mm

Weight:

T838	..	3.2kg
T839	..	3.4kg

1.2.3 Test Standards

Where applicable, this equipment is tested in accordance with the following standards.

1.2.3.1 European Telecommunication Standard

ETS 300 086 January 1991

Radio equipment and systems; land mobile service; technical characteristics and test conditions for radio equipment with an internal or external RF connector intended primarily for analogue speech.

ETS 300 113 March 1996

Radio equipment and systems; land mobile service; technical characteristics and test conditions for radio equipment intended for the transmission of data (and speech) and having an antenna connector.

ETS 300 219 October 1993

Radio equipment and systems; land mobile service; technical characteristics and test conditions for radio equipment transmitting signals to initiate a specific response in the receiver.

ETS 300 279 February 1996

Radio equipment and systems; electromagnetic compatibility (EMC) standard for private land mobile radio (PMR) and ancillary equipment (speech and/or non-speech).

1.2.3.2 DTI CEPT Recommendation T/R-24-01

Annex I: 1988

Technical characteristics and test conditions for radio equipment in the land mobile service intended primarily for analogue speech.

Annex II: 1988

Technical characteristics of radio equipment in the land mobile service with regard to quality and stability of transmission.

1.2.3.3 Telecommunications Industry Association

ANSI/TIA/EIA-603-1992

Land mobile FM or PM communications equipment measurement and performance standards.

 Copyright TEL

1.3 Product Codes

The three groups of digits in the T830 Series II product code provide information about the model, type and options fitted, according to the conventions described below.

The following explanation of T830 Series II product codes is not intended to suggest that any combination of features is necessarily available in any one product. Consult your nearest Tait Dealer or Customer Service Organisation for more information regarding the availability of specific models, types and options.

Model

The Model group indicates the basic function of the product, as follows:

T83X-XX-XXXX	T835 receiver T836 25W transmitter T837 exciter T838 50W power amplifier T839 100W power amplifier

Type

The Type group uses two digits to indicate the basic RF configuration of the product.

The first digit in the Type group designates the frequency range:

T83X-**X**X-XXXX	'1' for 136-156MHz '2' for 148-174MHz

The second digit in the Type group indicates the channel spacing:

T83X-X**X**-XXXX	'0' for wide bandwidth (25kHz) '3' for mid bandwidth (20kHz) '5' for narrow bandwidth (12.5kHz)

Options

T83X-XX-**XXXX**	The Options group uses four digits and/or letters to indicate any options that may be fitted to the product. This includes standard options and special options for specific customers. '0000' indicates a standard Tait product with no options fitted. The large number of options precludes listing them here.

1.4 Standard Product Range

The following table lists the range of standard T838 and T839 types (i.e. no options fitted) available at the time this manual was published. Consult your nearest Tait Dealer or Customer Service Organisation for more information.

Output Power (W)	50		100	
Frequency Range (MHz)	136-156	148-174	136-156	148-174
PA Type: T838-	10-0000	20-0000		
PA Type: T839-			10-0000	20-0000

You can identify the PA type by checking the product code printed on a label on the rear of the heatsink (Figure 1.1 in Part A shows typical labels). You can further verify the PA type by checking the placement of an SMD resistor in the table that is screen printed onto the PCB (refer to Section 5.1 for more details).

 Copyright TEL

2 T838/839 Circuit Operation

This section provides a basic description of the circuit operation of the T838/839 PA.

Refer to Section 5 where the parts lists, grid reference index and diagrams will provide detailed information on identifying and locating components. Refer also to Figure 3.3 which shows the location of the main adjustment controls.

The following topics are covered in this section.

Section	Title	Page
2.1	**Introduction**	**2.3**
2.2	**RF Circuitry**	**2.4**
2.3	**Control Circuitry**	**2.5**
2.3.1	Power Control	2.6
2.3.2	Driver Power Level	2.6
2.3.3	Thermal Protection	2.6
2.3.4	Forward And Reverse Power Alarms	2.7
2.3.5	Forward And Reverse Power Metering	2.7
2.3.6	Fan Control Circuitry	2.7
2.4	**Power Supply & Regulator Circuits**	**2.8**

Figure	Title	Page
2.1	T838 High Level Block Diagram	2.3
2.2	T839 High Level Block Diagram	2.3
2.3	T838/839 Control Circuitry Block Diagram	2.5
2.4	T839 Fan Control Logic Diagram	2.7
2.5	T838/839 Power Supply & Regulator Circuitry Block Diagram	2.8

Copyright TEL

2.1 Introduction

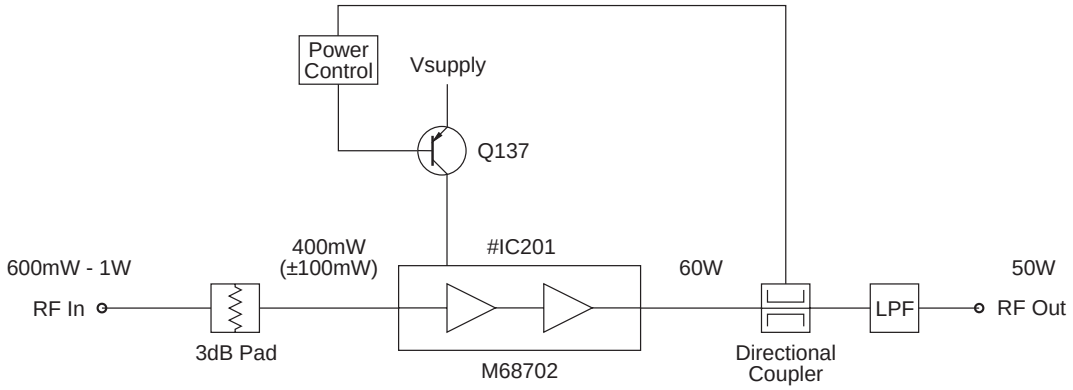

Figure 2.1 T838 High Level Block Diagram

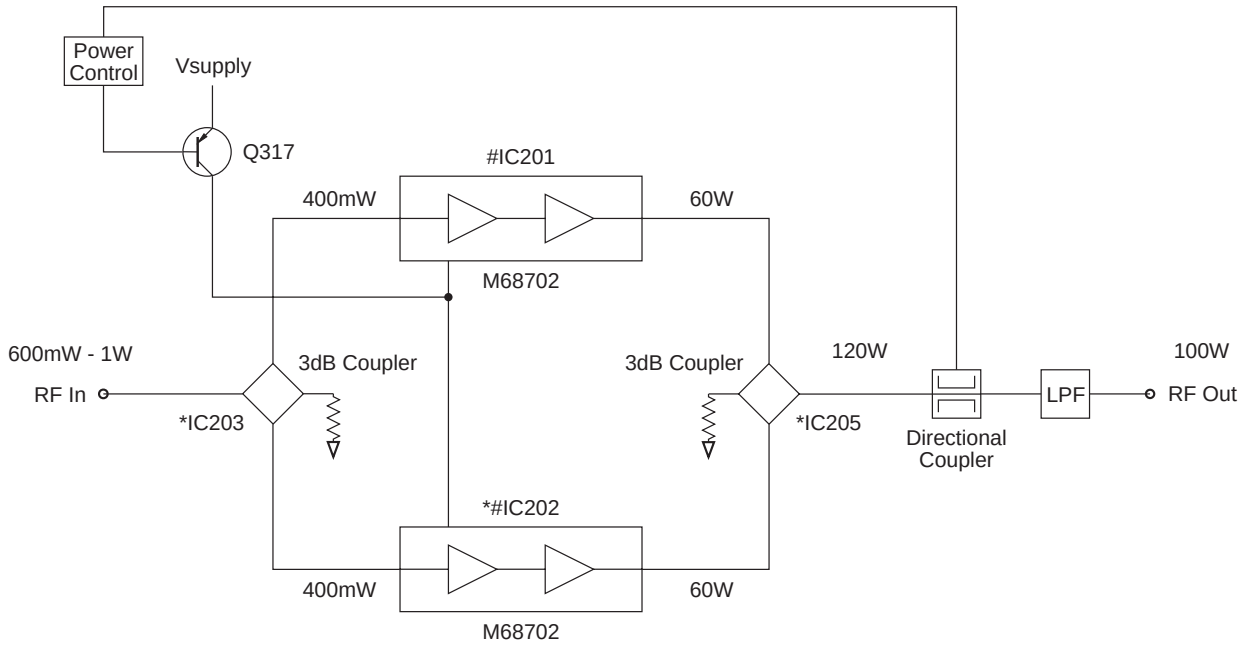

Figure 2.2 T839 High Level Block Diagram

The T838/839 comprise a single stage RF power amplifier with extensive control circuitry:

- in the T838 this stage consists of a single, two-stage RF power module which increases the drive level to approx. 60W;
- in the T839 this stage consists of two, two-stage RF power modules, each of which increases the drive level to approx. 60W; the outputs from these modules are then combined to provide the rated output power.

Figure 2.1 and Figure 2.2 show the configuration of each of the main circuit blocks on a functional level, while the fold-out Figure 1.1 shows their location on the PCB.

2.2 RF Circuitry

(Refer to the RF & thermistor control sections circuit diagram in Section 5.)

The T838 consists of a single RF power module (#IC201) which delivers 60-70W. The input signal is fed directly into the module, and the output from the module is passed to the antenna socket via the directional coupler and low pass filter.

The T839 consists of two RF power modules (#IC201 & *#IC202), each of which delivers 60-70W. The input signal to these modules is split via a 3dB quadrature hybrid (*IC203). The outputs from the modules are recombined by a second 3dB quadrature hybrid (*IC205) before being passed to the antenna socket via the directional coupler and low pass filter.

The directional coupler senses forward and reflected power, which is rectified (D201 & D203) and passed to the control circuitry for metering, alarm and power control purposes.

Power control is via a series pass transistor (Q137), which controls the supply voltage on pin 2 of #IC201 in the T838, and pin 2 of both #IC201 and *#IC202 in the T839.

 Copyright TEL

2.3 Control Circuitry

(Refer to the control section circuit diagram in Section 5.)

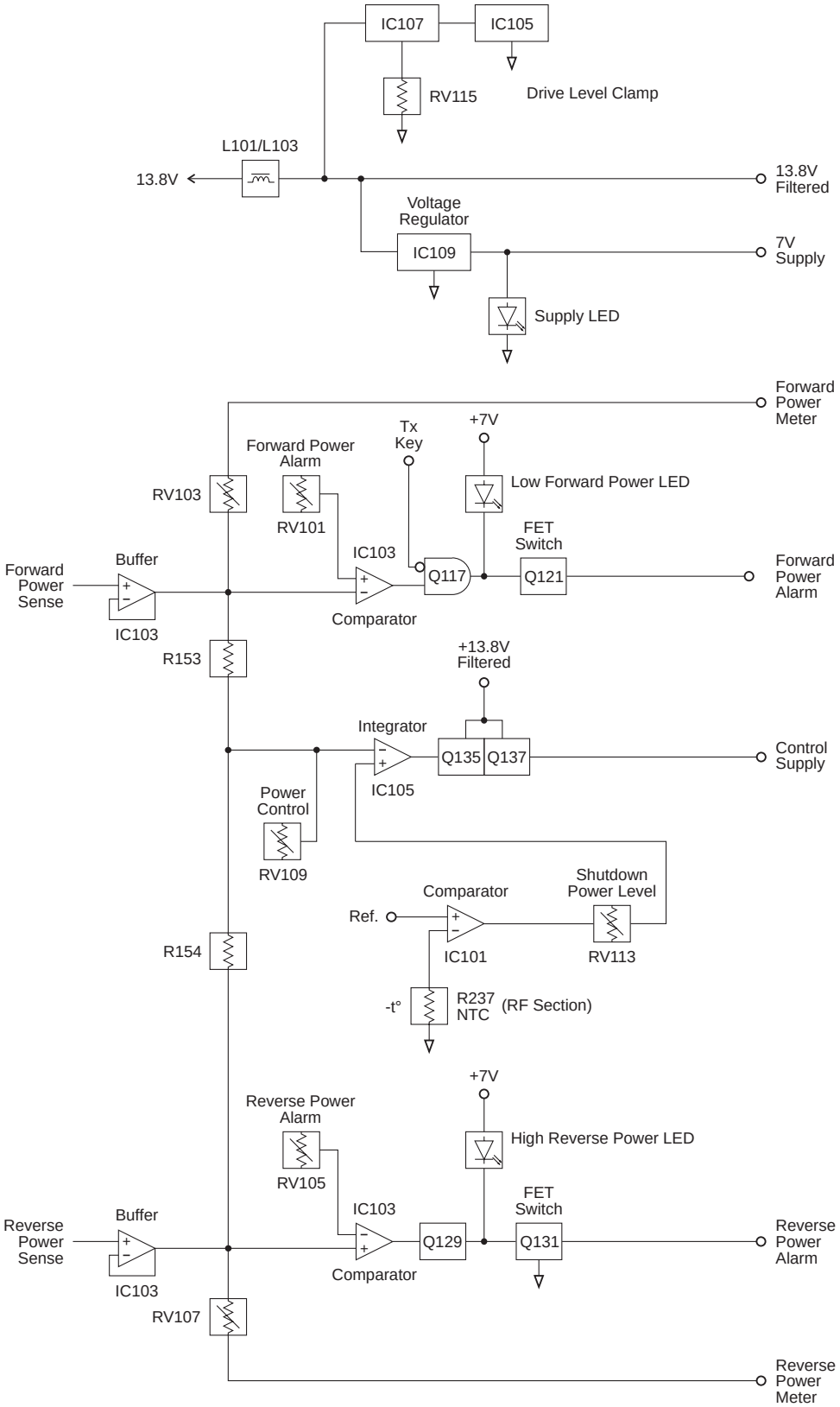

Figure 2.3 T838/839 Control Circuitry Block Diagram

2.3.1 Power Control

The DC voltages from the directional coupler representing forward and reflected power are buffered by the two voltage followers, IC103 pins 1, 2 & 3 and pins 8, 9 & 10. Their outputs are summed at an integrator (IC105 pins 1, 2 & 3), which drives the series pass control elements (Q135 & Q137).

Forward and reflected power are summed so that, under high output VSWR, the power control turns the PA down. This is because the control loop adjusts for the same DC voltage from the directional coupler that would have been present if there were no reflected power.

2.3.2 Driver Power Level

The maximum output power of the T838/839 can be limited by placing a ceiling on the driver output power level using RV115 (accessible through the side cover). For example, if RV115 is set for a maximum output power of 50W, the range of adjustment using RV109 (front panel power adjust) will be 20 to 50W.

Caution: **The driver power level clamp (RV115) is factory set to give a maximum power output of 60W for the T838 and 120W for the T839. The unit may be damaged if this level is increased.**

2.3.3 Thermal Protection

At excessively high temperatures, the output power will automatically reduce to a preset level (set by RV113), thus preventing the PA from overheating.

Ambient temperature within the PA is measured by a thermistor controlled voltage divider (R168, R237) which applies a voltage to a comparator with hysteresis (IC101 pins 8, 9 & 10). This thermistor is located on the PCB in the low pass filter cavity.

Thermal protection is also provided for each RF power module to prevent the module itself from overheating. This protection consists of a thermistor controlled voltage divider (R207, *R215 and R220, R219) which sets a voltage on a comparator with hysteresis (IC204 pins 1, 2 & 3 and 5, 6 & 7). These thermistors are located on the module flanges.

The output current from all comparators is summed into the power control network via RV113 so that the power level to which the PA must turn down may be set.

 Copyright TEL

2.3.4 Forward And Reverse Power Alarms

If forward power drops below, or reverse power rises above, presettable limits, alarms may be triggered.

The alarm outputs are open drain configuration and are low under normal conditions (i.e. forward and reverse power levels are normal).

IC103 pins 12, 13 & 14 and pins 5, 6 & 7 form comparators with thresholds adjusted via RV101 and RV105 respectively. The inputs are from the forward and reverse power signals from the directional coupler, buffered by IC103 pins 1, 2 & 3 and pins 8, 9 & 10. Thus, the power levels at which the forward and reverse power alarms are triggered are defined by RV101 and RV105 respectively.

2.3.5 Forward And Reverse Power Metering

Forward and reverse power signals from the two IC1 buffers are available for metering purposes. The output currents are adjustable via RV103 (forward power) and RV107 (reverse power).

2.3.6 Fan Control Circuitry

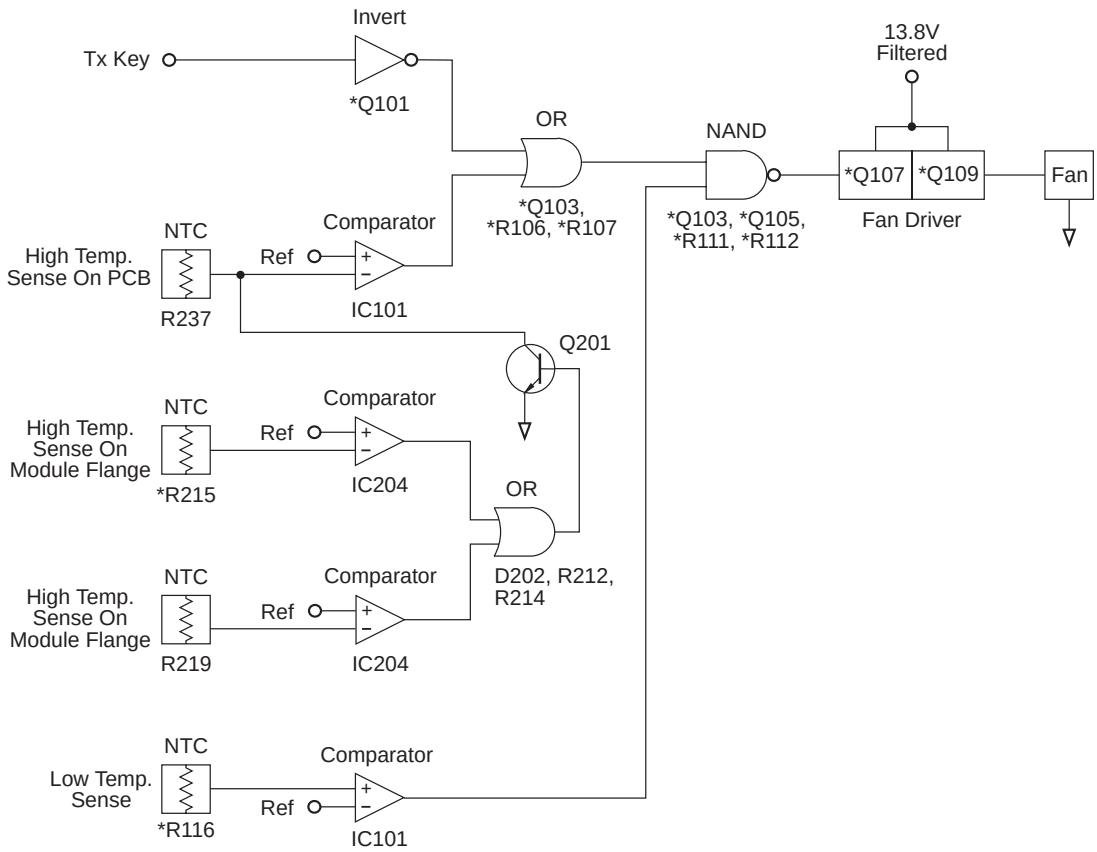

Figure 2.4 T839 Fan Control Logic Diagram

Comparator IC101 pins 12, 13 & 14 are set to switch at heatsink temperatures greater than +90°C or RF power module flange temperatures greater than +110°C, and pins 1, 2 & 3 at temperatures less than -10°C.

A logic AND function is applied to the comparator outputs by *Q103 and *Q105, thereby turning on the fan unconditionally (via *Q107 and *Q109) if the heatsink temperature exceeds +90°C or the module flange temperatures exceed +110°C.

A logic OR function is applied to comparator IC101 pins 12, 13 & 14 and Tx KEY signals, thereby turning on the fan when the transmitter is keyed and the temperature is between -10°C and +90°C (or +110°C for the module flanges).

If the temperature drops below -10°C, *Q105 is turned off, preventing *Q103 from activating the fan.

2.4 Power Supply & Regulator Circuits

(Refer to the control section circuit diagram in Section 5.)

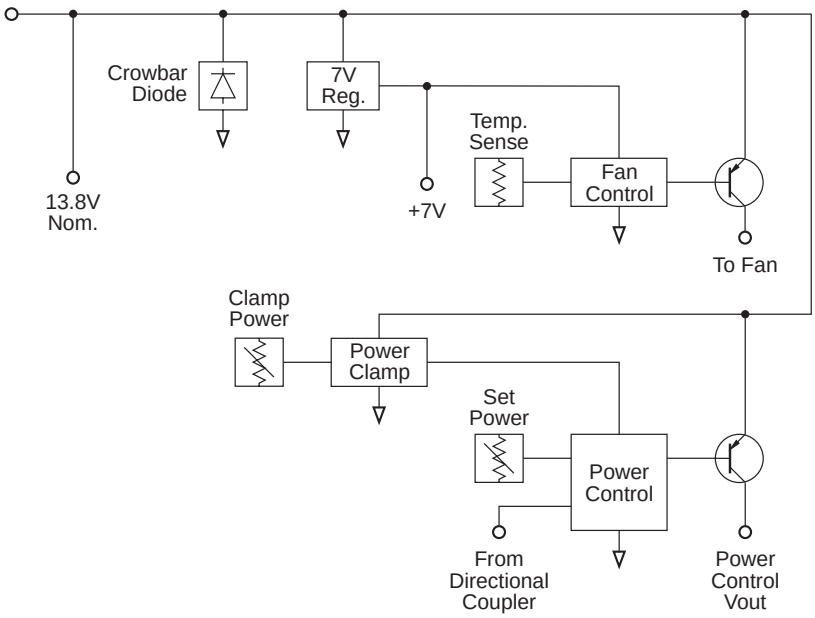

Figure 2.5 T838/839 Power Supply & Regulator Circuitry Block Diagram

The T838/839 are designed to operate off a 10.8-16V DC supply (13.8V nominal). A 7V supply runs directly off the 13.8V rail, driving the fan control, power control and alarm circuitry.

A crowbar diode is fitted for protection against connection to a power supply of incorrect polarity. It also provides transient overvoltage protection.

Note: A fuse must be fitted in the power supply line for the diode to provide effective protection.

 Copyright TEL

3 T838/839 Initial Adjustment

Caution: **This equipment contains CMOS devices which are susceptible to damage from static charges. Refer to Section 1.2 in Part A for more information on anti-static procedures when handling these devices.**

The following section describes the full adjustment procedure to be carried out before operating the T838/839.

Note: The T838/839 require no RF tuning or alignment.

Refer to Section 5 where the parts lists, grid reference index and diagrams will provide detailed information on identifying and locating components. Refer also to Figure 3.3 which shows the location of the main adjustment controls.

The following topics are covered in this section.

Section	Title	Page
3.1	**Test Equipment Required**	**3.3**
3.2	**Preliminary Checks**	**3.3**
3.3	**Setting The Output Power**	**3.4**
3.4	**Limiting The Maximum Output Power**	**3.5**
3.5	**High Temperature Shutdown Power Level**	**3.5**
3.6	**Remote Forward Power Meter Calibration**	**3.6**
3.7	**Remote Reverse Power Meter Calibration**	**3.6**
3.8	**Setting Alarm Levels**	**3.6**
3.8.1	Forward Power	3.6
3.8.2	Reverse Power	3.6

Figure	Title	Page
3.1	T838/839 Test Equipment Set-up	3.3
3.2	Modifications To Limit Maximum Output Power	3.5
3.3	T838/839 Main Adjustment Controls	3.9

Copyright TEL

3.1 Test Equipment Required

- DC power supply capable of delivering 30A at 13.8V.
- Multimeter or DMM (e.g. Fluke 77).
- RF power meter (e.g. HP 435 series or Bird Wattmeter).
- 150W 30dB attenuator.
- 150W 3dB 50 ohm pad.
- 'BNC' to 'N' type adaptors (e.g. Amphenol, Greenpar).
- Appropriate trimming tools.

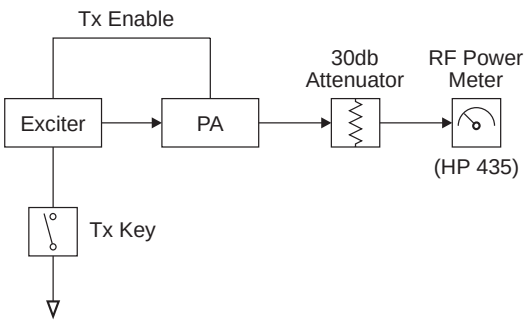

Figure 3.1 T838/839 Test Equipment Set-up

Caution: **Do not connect attenuators or DC blocks between the T837 and T838/839 or the cyclic keying circuitry will not function correctly.**

3.2 Preliminary Checks

Check for short circuits between the positive rail and earth.

Set up the test equipment as in Figure 3.1.

Connect the T838/839 to a 13.8V DC supply.

Check that the quiescent current is <50mA.

To key the transmitter, earth the key line (pin 13) on the exciter.

Check that the power supply is still at 13.8V under load.

Check that the regulated power control supply is approximately 7V.

Note: The output power and alarm levels should be set with the side cover on. If the cover is removed for other adjustment procedures, make a final check of the output power and alarm levels with the side cover on.

3.3 Setting The Output Power

Caution: **If the high temperature shutdown power level has not yet been set or is unknown, check that the unit does not overheat while setting the output power.**

Note 1: Cables and connectors can easily cause a power loss of several watts if either too long or poorly terminated. Always use the shortest possible leads (or connectors instead of leads) between the T838/839 and power meter set-up.

Note 2: You will need appropriate extension leads if you wish to carry out the adjustment procedures with the T838/839 withdrawn from the rack in the latched position. Alternatively, disconnect and withdraw the T838/839 and reconnect it behind the rack.

Note 3: The actual power used may be limited by regulatory requirements.

Connect the exciter output to the PA input via a thru-line wattmeter with a 1W full scale reading. Special BNC/N leads will be required.

Connect an RF power meter to the PA output.

Set the front panel power control preset (RV109) fully clockwise.

Key on the drive source.

Check that the power output exceeds:

T838 - 50W
T839 - 100W.

Note: The side cover access hole for the driver power clamp (RV115) is covered with a tamper-proof sticker. The clamp has been factory set to 60W (T838)/ 120W (T839) maximum output power and ***should not normally need adjustment***. If the output power level is low, check that the high temperature shutdown circuit has not activated by verifying that IC101 pin 8 is low.

Adjust RV109 to set the power output to the required level (e.g. 50W for the T838, 100W for the T839).

 Copyright TEL

3.4 Limiting The Maximum Output Power

Refer to the control section circuit diagram in Section 5.

Two chip resistors are provided on the PCB if there is a requirement to set an absolute limit to the maximum output power. These two resistors are normally bypassed by a zero Ohm resistor (LINK2).

Remove LINK2 as shown in Figure 3.2 to bring R173 & R174 into circuit.

You can now limit the maximum output power by selecting the appropriate values for R173 & R174. Two examples are given in the table below:

@174MHz	60W max. (T838 & T839)	110W max. (T839 only)
R173	470Ω	470Ω
R174	3k9	1k8

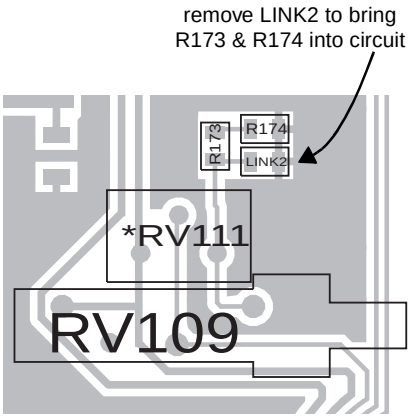

Figure 3.2 Modifications To Limit Maximum Output Power

Note: The resistor values given in the above table are valid at 174MHz only. Different frequencies may require different values, and you will have to determine the correct values for your application by testing. At any given frequency an increase in resistance will result in a decrease in maximum output power.

3.5 High Temperature Shutdown Power Level

Set RV109 (power control) to the required output power.

Earth pin 9 of IC101 (the via at NTC R237 is convenient).

Adjust RV113 (shutdown power level) for an output power of:

T838 - 16W
T839 - 40W.

Remove the earth from pin 9 of IC101 (or the pad of R237).

To check the operation of the RF power module thermistor(s), place shorting links across pins 1 & 2 and 2 & 3 of LINK201.

Check that the output power drops to:

T838 - 16W
T839 - 40W.

Remove the shorting links from LINK201.

3.6 Remote Forward Power Meter Calibration

If a remote meter is connected, adjust the forward power meter calibration control (RV103) for the remote reading to agree with the RF power meter reading.

3.7 Remote Reverse Power Meter Calibration

If a remote meter is connected, connect a 50 ohm 3dB pad (with the output open circuit) to the PA output.

Apply RF drive and Tx key.

Adjust the reverse power meter calibration control (RV107) for a quarter of the forward power reading.

3.8 Setting Alarm Levels

Note: If forward and reverse power metering is being used, set up their calibration (Section 3.6 and Section 3.7) before setting the alarm levels.

3.8.1 Forward Power

Power up the T838/839 and adjust the front panel power control (RV109) so that the output power is at the alarm level required (e.g. 80W if the T839 normally operates at 100W).

Adjust the forward power alarm set control (RV101) so that the forward power alarm LED lights.

Check the alarm level setting by adjusting the power up and down and observing the alarm LED. A few watts hysteresis can be expected.

Readjust RV109 for the normal operating level.

Note: Remote indication is available at pin 3 of D-range 1.

3.8.2 Reverse Power

Power up the T838/839 and adjust the front panel power control (RV109) for the normal operating power level.

Place a known mismatch of the required value (e.g. 3:1 VSWR) and adjust the reverse power alarm set control (RV105) so that the reverse power alarm LED lights.

 Copyright TEL

Example: A VSWR of 3:1 can be simulated by connecting an unterminated 3dB pad (100W) to the PA output. This will result in a return loss of 6dB.

Note: Remote indication is available at pin 4 of D-range 1.

Copyright TEL

4 T838/839 Fault Finding

Caution: **This equipment contains CMOS devices which are susceptible to damage from static charges. Refer to Section 1.2 in Part A for more information on anti-static procedures when handling these devices.**

The following test procedures and fault finding flow charts may be used to help locate a hardware problem, however they are by no means a complete fault finding procedure. If you still cannot trace the fault after progressing through them in a logical manner, contact your nearest Tait Dealer or Customer Service Organisation. If necessary, you can get additional technical help from Customer Support, Radio Systems Division, Tait Electronics Ltd, Christchurch, New Zealand (full contact details are on page 2).

Refer to Section 5 where the parts lists, grid reference index and diagrams will provide detailed information on identifying and locating components.

The following topics are covered in this section.

Section	Title	Page
4.1	**Visual Checks**	**4.3**
4.2	**DC Checks**	**4.3**
4.3	**RF Checks**	**4.3**
4.4	**Fault Finding Charts**	**4.7**
4.4.1	T838 PA	4.7
4.4.2	T839 PA	4.8
4.4.3	Power Control	4.9
4.4.4	Fan Control Circuitry	4.10
4.5	**Replacing RF Power Modules**	**4.11**
4.6	**Removing The PCB From The Heatsink**	**4.12**

Figure	Title	Page
4.1	Positioning Of Test Leads	4.6

Copyright TEL

4.1 Visual Checks

Remove the side cover from the T838/839 and inspect the PCB for damaged or broken components, paying particular attention to the surface mounted devices (SMDs). Also check for defective solder joints.

Refer to Section 4.5, Section 4.6 and Section 3 of Part A for more details on repair and replacement of components.

4.2 DC Checks

Check that +13.8V is present on pin 3 of *#IC202 and/or #IC201. Make this measurement when the transmitter is not keyed.

Check that approximately 6-13V is present on pin 2 of *#IC202 and/or #IC201 (the level is dependent on the setting of RV109).

Check that +13.8V is present at pin 4 of IC103.

Check that approximately +12V is present at pin 8 of IC105 (the level is dependent on the setting of RV109).

Check that +7.0V is present at the output of regulator IC109.

4.3 RF Checks

The PA Fault Finding Charts (Section 4.4.1 & Section 4.4.2) provide a systematic approach for locating a fault in the RF circuitry. Use these charts in conjunction with Figure 4.1, which shows the locations of the 50Ω input and output test points for RF power modules #IC201 and *#IC202.

Note 1: Use good quality 50Ω coax for the "flying" test leads.

Note 2: Ensure each output is terminated in a 50Ω load of the correct power rating.

For problems with the power control circuitry, refer to the Power Control Fault Finding Chart (Section 4.4.3).

Copyright TEL

replace A4 pages D4.5/D4.6 with A3 pages D4.5/D4.6

replace A4 pages D4.5/D4.6 with A3 pages D4.5/D4.6

Copyright TEL

4.4 Fault Finding Charts

4.4.1 T838 PA

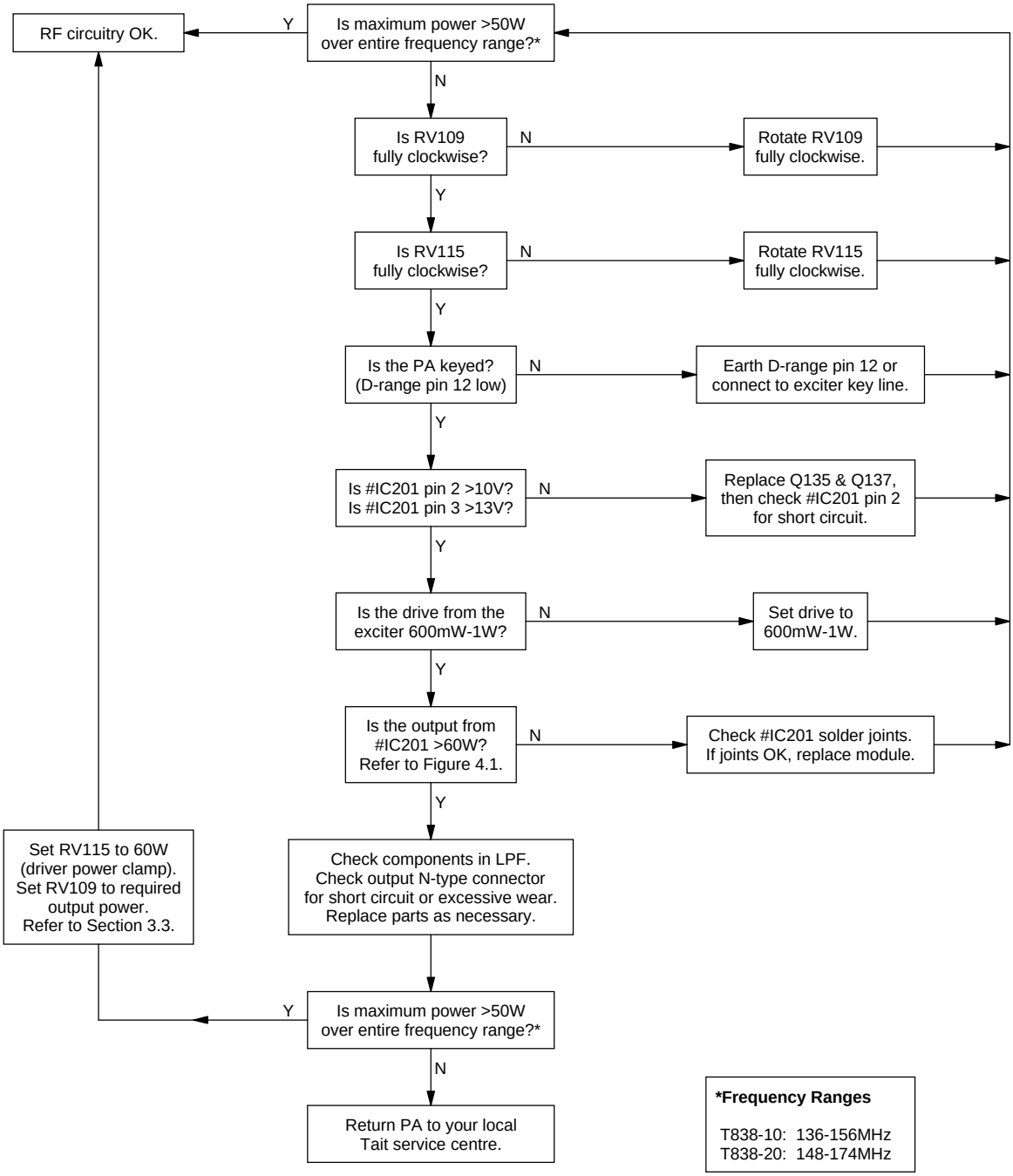

4.4.2 T839 PA

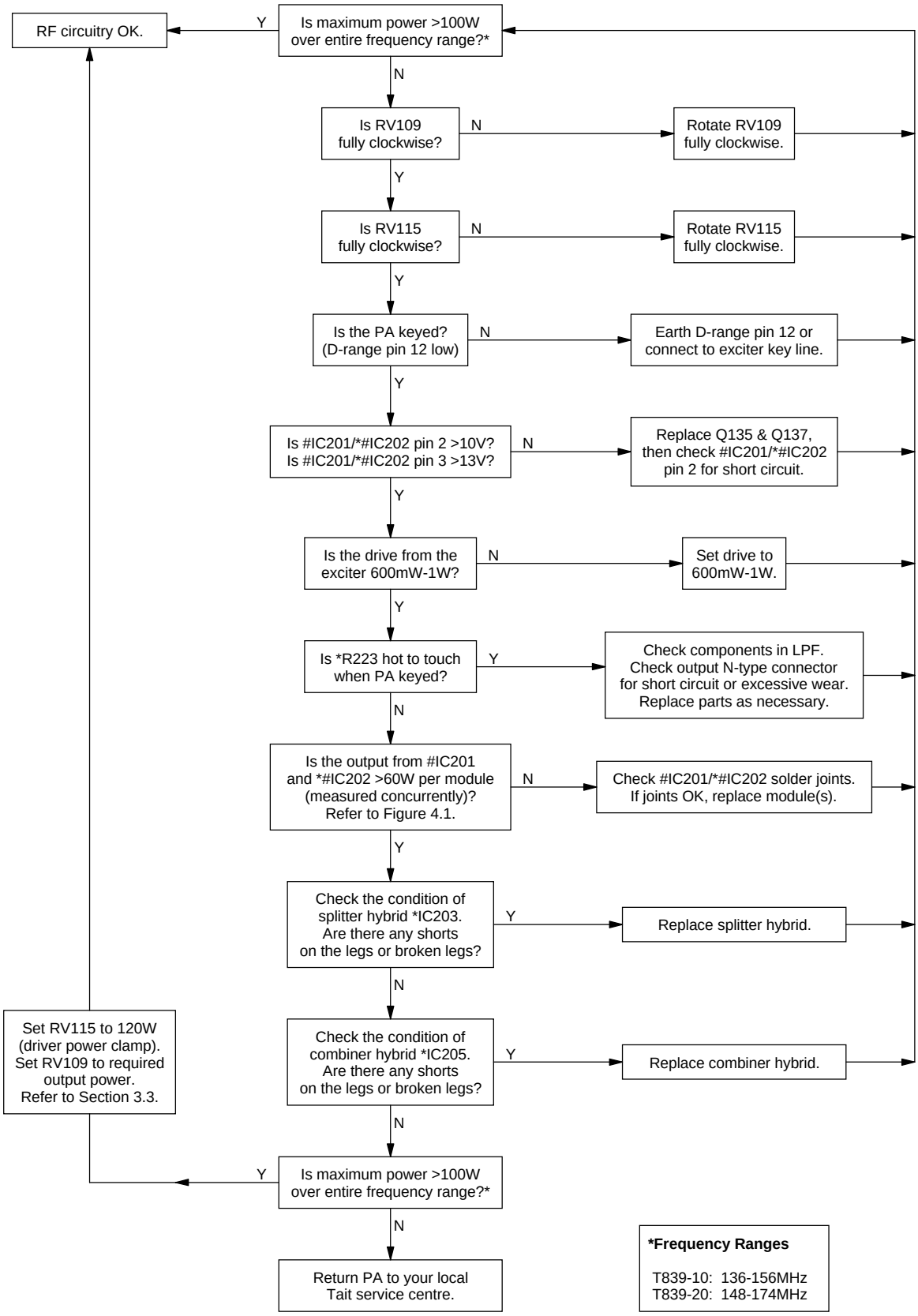

 Copyright TEL

4.4.3 Power Control

Approximate voltages (@ 174MHz) under normal operating conditions:

Forward & Reverse Power Measurement	Output Power	
	50W	100W
forward power at IC103 pin 1	2.3V	3.3V
forward power at C261	4.1V	6.0V
reverse power at IC103 pin 8	0.6V	0.6V
reverse power at C294	0.3V	0.6V

Caution

The following voltage checks are all done with RV115 (driver power clamp) set to maximum. When these tests are finished, reset RV115 to 60W (T838) or 120W (T389).

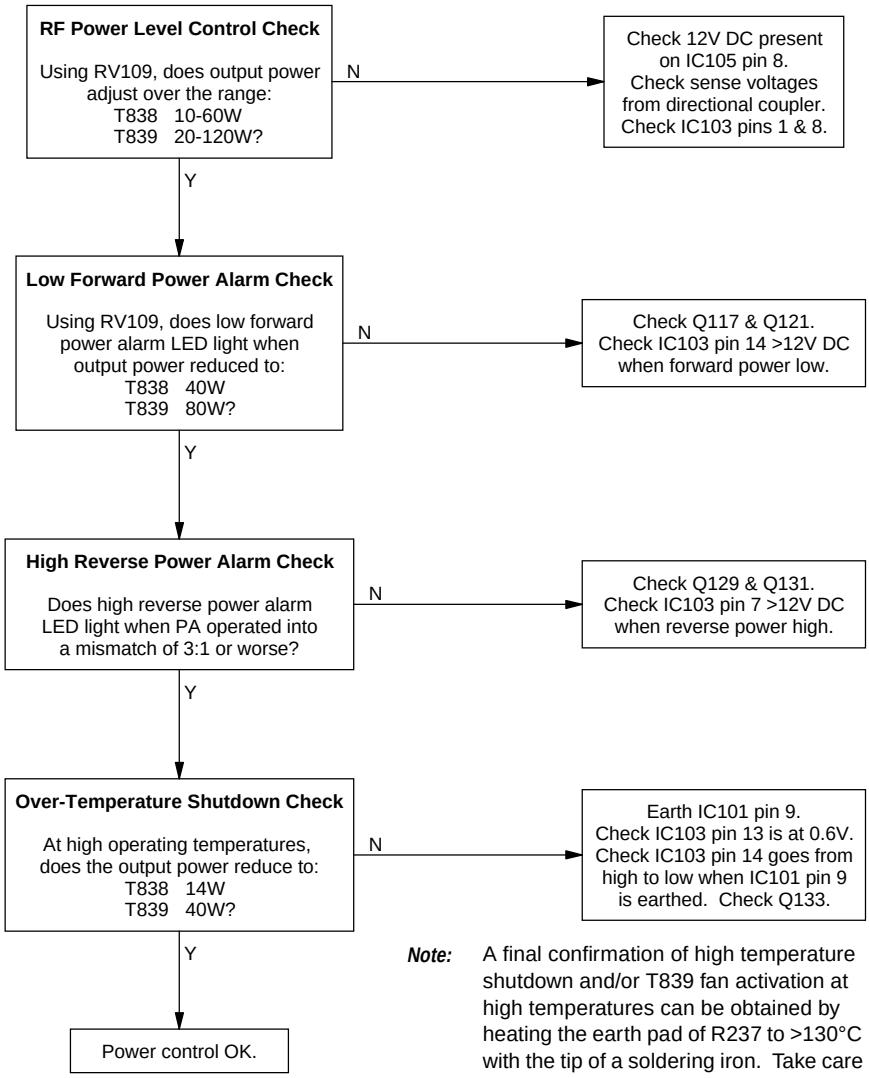

Note: A final confirmation of high temperature shutdown and/or T839 fan activation at high temperatures can be obtained by heating the earth pad of R237 to >130°C with the tip of a soldering iron. Take care not to damage R237.

4.4.4 T839 Fan Control Circuitry

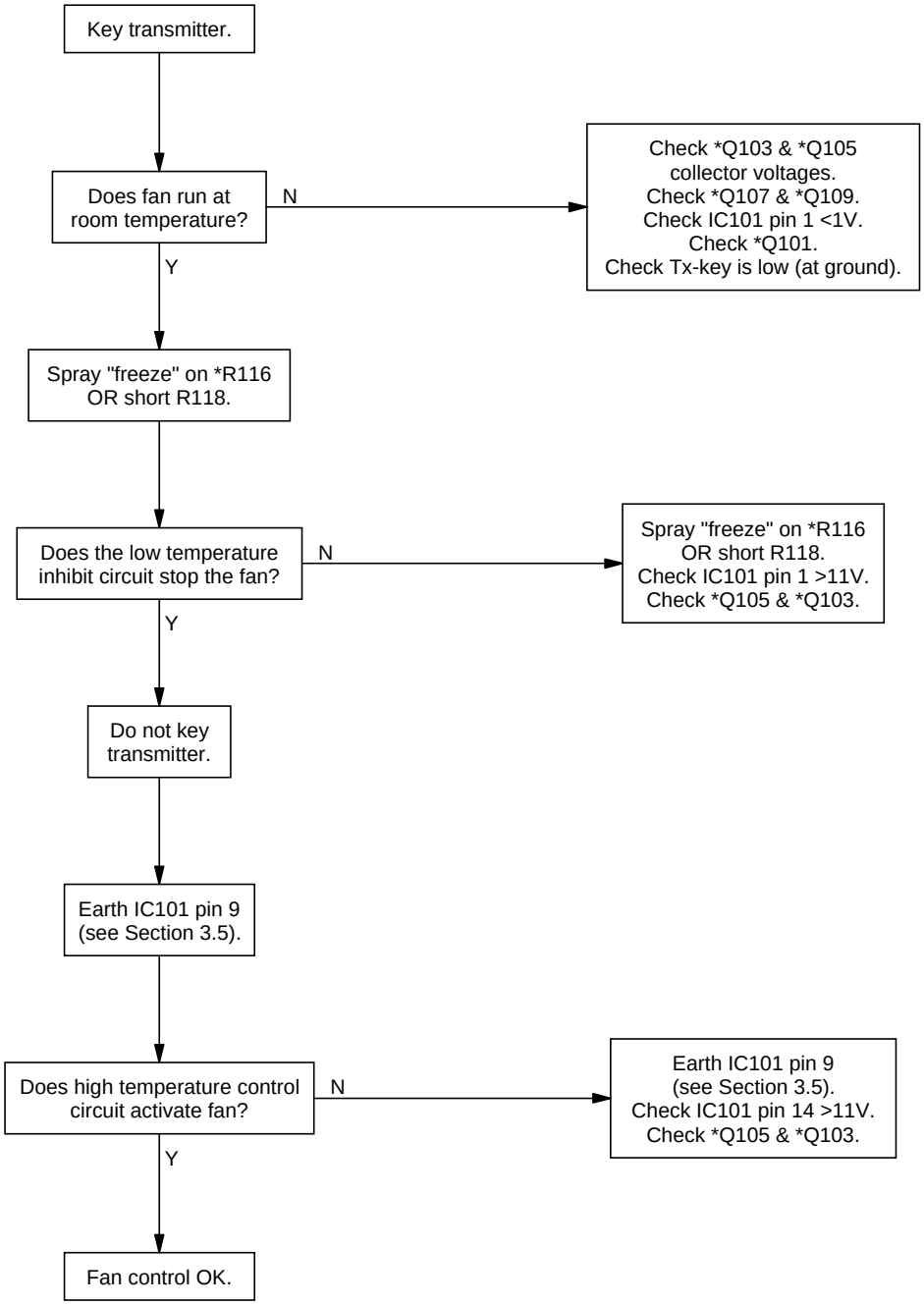

 Copyright TEL

4.5 Replacing RF Power Modules

Caution: **Follow these instructions carefully, otherwise the module can fail because of poor heatsinking or cracked substrates.**

Caution: **Do not apply too much heat to the original type of thermistor assembly as the epoxy used may give off fumes that will cause eye irritation. If necessary, replace this device as a complete assembly (see note 1 below).**

Desolder the module and thermistor[1] legs by heating with a soldering iron and lifting away from the PCB with a screwdriver or thin stainless steel spike.

Undo the module screws and remove the thermistor assembly.

Desolder and remove both earth tags.

Gently lift the module away from the heatsink.

Note: The module may be stuck down quite firmly with heatsink compound. You may need to carefully prise it away from the heatsink with a small screwdriver. Keep the heatsink compound clean while the module is detached.

Apply a small amount of heatsink compound (Dow-Corning 340 or equivalent) to the replacement module mounting surface. Use enough compound to ensure an even film over the entire mounting surface.

Reposition the module in the correct orientation and ensure it is well pasted to the heatsink.

Replace the earth tags and thermistor[1] assembly in their original positions and hand-tighten the screws, ensuring the tags and thermistor remain in place. Alternately tighten each screw evenly, finally torquing them down to 56N.cm/5in.lbf. with an accurate torque driver.

Caution: **It is essential that you apply the correct torque to these screws to allow the module flange to expand and contract under temperature cycling. Also, do not solder any module legs before torquing down otherwise the device may be broken.**

Solder all module legs to the PCB.

Carefully solder the thermistor leg to the PCB[1].

1. Later production PAs are fitted with a different type of thermistor which you do not need to desolder from the PCB before removing a power module. Refer to the top side PCB layout diagrams in Sections 5.2 and 5.3 for further details.

4.6 Removing The PCB From The Heatsink

Note: This is a lengthy procedure and should be considered only after all other checks have been carried out. There are no components on the bottom of the PCB.

Remove the harmonic filter shield lid.

T839 Only: Desolder the power feed to the fan from the PCB.

Remove the output 50 ohm coaxial connector by unscrewing it from the heatsink casting and desoldering it from the PCB and harmonic filter shield wall.

Unplug the input 50 ohm coaxial cable from the PCB, unscrew the BNC connector from the heatsink, and remove the connector and cable.

Desolder the positive and negative power feed wires from the D-range PCB.

Disconnect the ribbon cable from the D-range PCB.

Remove the 2 screws securing the D-range connector and PCB to the heatsink and withdraw the assembly from the heatsink.

Remove the mounting screws for the TO-220 device(s): Q137 (and *R223 in the T839).

Remove the screws securing the RF power module(s): #IC201 (and *#IC202 in the T839).

T839 Only: Remove the four hex nuts and washers from the splitter/combiner hybrids (*IC203 and *IC205).

Remove the 11 PCB retaining screws.

Push the three LEDs out of their front panel grommets.

Lift the PCB gently from the heatsink to gain access to the underside of the board.

Note: #IC201, *#IC202 and *R223 may be stuck down with heatsink compound. You may need to carefully prise them away from the heatsink with a small screwdriver.

Caution: **Keep the heatsink compound clean while the PCB is detached. Any objects caught in the heatsink compound underneath the module which prevent effective earthing and/or heatsinking will cause catastrophic failure.**

Caution: **Do not operate the PA with the PCB detached as the heatsink is used for earthing and heat dissipation.**

 Copyright TEL

To replace the PCB, reverse the order of removal, taking care that the wiring is correctly positioned and not 'pinched'.

Make sure that the heatsink compound has stayed clean, and that the insulating pad for Q137 is not damaged.

If you have difficulty refitting the LEDs, try pushing the body of the LED back into the grommet with a thin screwdriver or spike.

Caution: **Tighten the splitter/combiner hybrid hex nuts to a torque of 22N.cm/2in.lbf. Any greater force will damage the devices.**

Tighten the RF power module screws to a torque of 56N.cm/5in.lbf. with an accurate torque driver. Deviating from this figure can cause the device to fail (refer to Section 4.5).

Copyright TEL

5 T838/839 PCB Information

Caution: **This equipment contains CMOS devices which are susceptible to damage from static charges. Refer to Section 1.2 in Part A for more information on anti-static procedures when handling these devices.**

This section provides the following information on the T838 and T839 power amplifiers:

- parts lists
- grid reference indexes
- mechanical assembly drawings
- PCB layouts
- circuit diagrams.

Section	Title	IPN	Page
5.1	Introduction		5.1.3
5.2	T838 Power Amplifier PCB	220-01404-03	5.2.1
5.3	T839 Power Amplifier PCB	220-01404-03	5.3.1

The T838 and T839 share the same basic design and are built on the same PCB. However, in order to simplify the presentation of the PCB information for each product, we have provided a separate parts list, grid reference index and set of drawings for both the T838 and T839, even though this has meant duplicating some information (e.g. grid reference index and circuit diagrams) in each section.

Copyright TEL

5.1 Introduction

Product Type Identification

You can identify the PA type by checking the product code printed on a label on the rear of the heat-sink (product codes are explained in Section 1.3 in this Part of the manual, and Figure 1.1 in Part A shows typical labels). You can further verify the PA type by checking the placement of an SMD resistor in the table that is screen printed onto the PCB, similar to the example drawn below. In this example, the resistor indicates that the product was built as a T830 Series I compatible T838-10-XXXX. See below for further details on T830 Series I/Series II compatibility.

PRODUCT TYPE			
MODEL	REV	SERIES I	SERIES II
T839-10	3A		
T839-20	3A		
T838-10	3A	[ ]	
T838-20	3A		

Note:

The only function of this resistor is to indicate the product type. It has no effect on the circuitry or operation of the PA.

T830 Series I / Series II Compatibility

T838 and T839 PAs can be built compatible with either T830 Series I or Series II equipment. You can check whether your PA was built as Series I or Series II compatible by checking the table that is screen printed onto the PCB, as explained above.

The table below explains briefly the differences between Series I and Series II compatible PAs. Apart from these differences, Series I and Series II compatible PAs are electrically and mechanically the same. Refer to Part I for detailed information on Series I/Series II compatibility.

Note: This manual covers the latest design T838 PA which uses an RF power module and is identified by the product code T838-X0-XXXX. Please refer to service manual M830-00-100 for information on the earlier model (Series I) T838 PA which is identified by the product code T838-10.

Item	Series I Compatible PA	Series II Compatible PA
*L201 (T838) *L211 (T839)	not fitted	fitted
*R120	fitted	not fitted
cyclic keying	disabled	enabled
RF input	front panel SMC	rear panel BNC
front panel	Series I with black Tait logo and Series I handle	Series II with blue Tait logo and Series II handle

PCB Identification

All PCBs are identified by a unique 10 digit “internal part number” (IPN), e.g. 220-12345-00, which is screen printed onto the PCB (usually on the top side), as shown in the example below:

The last 2 digits of this number define the issue status, which starts at 00 and increments through 01, 02, 03, etc. as the PCB is updated. Some issue PCBs never reach full production status and are therefore not included in this manual. A letter following the 10 digit IPN has no relevance in identifying the PCB for service purposes.

Note: It is important that you identify which issue PCB you are working on so that you can refer to the appropriate set of PCB information.

Parts Lists

The 10 digit numbers (000-00000-00) in this Parts List are “internal part numbers” (IPNs). We can process your spare parts orders more efficiently and accurately if you quote the IPN and provide a brief description of the part.

The components listed in this parts list are divided into two main types: those with a circuit reference (e.g. C2, D1, R121, etc.) and those without (miscellaneous and mechanical).

Those with a circuit reference are grouped in alphabetical order and then in numerical order within each group. Each component entry comprises three or four columns, as shown below:

circuit reference - lists components in alphanumeric order

Ref	Var	IPN	Description
C126		015-06100-08	CAP CER 1206 CHIP 100N 10% X7R 50V
C127		020-09220-01	CAP ELECT RADL 220M 16V 10X12.5MM
C128		015-06100-08	CAP CER 1206 CHIP 100N 10% X7R 50V
C129		015-06100-08	CAP CER 1206 CHIP 100N 10% X7R 50V
&C130	10	015-25100-08	CAP CER 0805 CHIP 10N 10% X7R 50V
&C130	15	015-24470-08	CAP CER 0805 CHIP 4N7 10% X7R 50V
&C130	20	015-25100-08	CAP CER 0805 CHIP 10N 10% X7R 50V
&C130	25	015-24470-08	CAP CER 0805 CHIP 4N7 10% X7R 50V
C131		015-24100-08	CAP CER 0805 CHIP 1N 10% X7R 50V
C132		015-24470-08	CAP CER 0805 CHIP 4N7 10% X7R 50V
C133		015-05470-08	CAP CER 1206 CHIP 47N 10% X7R 50V

variant column - indicates that this is a variant component which is fitted only to the product type listed

description - gives a brief description of the component

Internal Part Number - order the component by this number

The mechanical and miscellaneous section lists the variant and common parts in IPN order.

 Copyright TEL

Parts List Amendments

At the front of the parts list is the Parts List Amendments box (an example of which is shown below). This box contains a list of component changes which took place after the parts list and diagrams in this section were compiled. These changes (e.g. value changes, added/deleted components, etc.) are listed by circuit reference in alphanumeric order and supersede the information given in the parts list or diagrams. Components without circuit references are listed in IPN order. The number in brackets at the end of each entry refers to the Tait internal Change Order document.

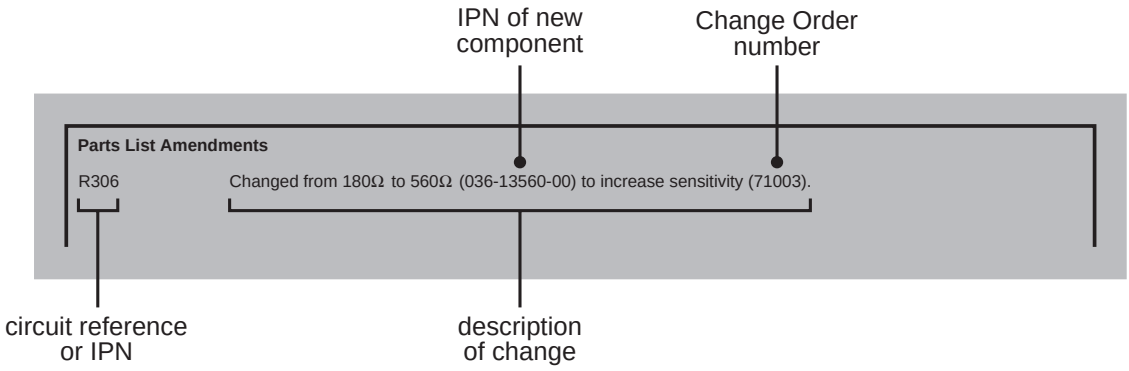

Variant Components

A variant component is one that has the same circuit reference but different value or specification in different product types. Where two products share the same PCB, the term "variant" is also used to describe components unplaced in one product. Variant components have a character prefix, such as "&", "=" or "#", before the circuit reference (e.g. &R100).

The table below explains the variant prefixes used in T800 Series II products:

If the variant prefix is. . .	the component will. . .
&	change according to channel spacing
=	change according to frequency stability
#	change according to frequency range
%	be placed or unplaced for special applications
*	be unplaced in one product (where two products share the same PCB)

Grid Reference Index

This section contains a component grid reference index to help you find components and labelled pads on the PCB layouts and circuit diagrams. This index lists the components and pads in alphanumeric order, along with the appropriate alphanumeric grid references, as shown below:

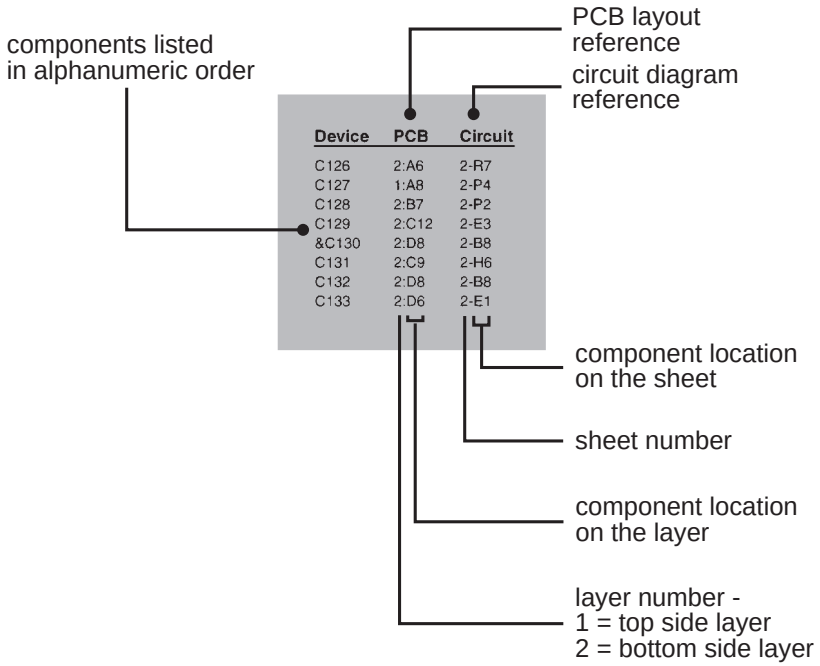

Using CAD Circuit Diagrams

Reading a CAD circuit diagram is similar to reading a road map, in that both have an alphanumeric border. The circuit diagrams in this manual use letters to represent the horizontal axis, and numbers for the vertical axis. These circuit diagram "grid references" are useful in following a circuit that is spread over two or more sheets.

When a line representing part of the circuitry is discontinued, a reference will be given at the end of the line to indicate where the rest of the circuitry is located, as shown below. The first digit refers to the sheet number and the last two characters refer to the location on that sheet of the continuation of the circuit (e.g. 1R3).

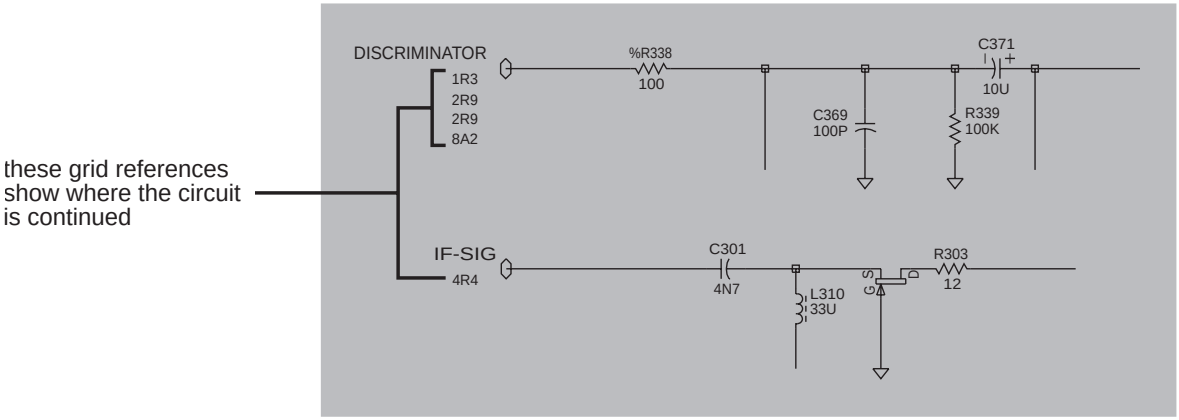

 Copyright TEL

5.2 T838 Power Amplifier PCB

This section contains the following information.

IPN	Section	Page
220-01404-03	Parts List	5.2.3
	Mechanical & Miscellaneous Parts	5.2.6
	Mechanical Assembly	5.2.7
	Grid Reference Index	5.2.9
	PCB Layout - Bottom Side	5.2.11
	PCB Layout - Top Side	5.2.12
	Control Section Circuit Diagram	5.2.13
	RF & Thermistor Control Sections Circuit Diagram	5.2.14

Copyright TEL

T838 Parts List (IPN 220-01404-03)

How To Use This Parts List

The components listed in this parts list are divided into two main types: those with a circuit reference (e.g. C2, D1, R121, etc.) and those without (miscellaneous and mechanical).

Those with a circuit reference are grouped in alphabetical order and then in numerical order within each group. Each component entry comprises three or four columns: the circuit reference, variant (if applicable), IPN and description. A number in the variant column indicates that this is a variant component which is fitted only to the product type listed. Static sensitive devices are indicated by an (S) at the start of the description column.

The miscellaneous and mechanical section lists the variant and common parts in IPN order. Where possible, a number in the legend column indicates their position in the mechanical assembly drawing.

The Parts List Amendments box below lists component changes that took place after the parts list and diagrams in this section were compiled. These changes (e.g. value changes, added/deleted components, etc.) are listed by circuit reference in alphanumeric order and supersede the information given in the parts list or diagrams. Components without circuit references are listed in IPN order.

Parts List Amendments

D101, D105	Removed from the main PCB and replaced by two 1N4148 diodes (IPN 001-50012-00) placed on the D-range PCB: one soldered between PL101 pins 5 and 7 (cathode), the other between PL101 pins 6 and 8 (cathode). To allow external power meters to read zero and still provide meter overvoltage protection (710978).	
D113	Changed from MR750 (IPN 001-00011-60) to MR2520L (IPN 001-00012-90) to provide overvoltage transient suppression (750087/88/89/90/91/92).	
IC204	Changed from LMC622CM to LM358 (710382).	
R123, R158	Changed from 1k resistors (IPN 036-14100-00) to BA592 diodes (IPN 001-10059-20) to allow external power meters to read zero (710978).	
R207	Changed from 47k (IPN 036-15470-10) to 4k7 (IPN 036-14470-10)	100k thermistor assembly replaced with 10k item; values of associated components changed accordingly (710394/411/447).
R209	Changed from 1k5 (IPN 036-14150-10) to 390Ω (IPN 036-13390-10)	
R210	Changed from 4k7 (IPN 036-14470-10) to 390Ω (IPN 036-13390-10)	
R213	Changed from 3k9 (IPN 036-14390-00) to 560Ω (IPN 036-13560-00)	
R218	Changed from 390Ω (IPN 036-13390-10) to 100Ω (IPN 036-13100-10)	
R219	Changed from 100k NTC (IPN 045-06100-05) to 10k NTC (IPN 045-05100-02)	
R220	Changed from 47k (IPN 036-15470-10) to 4k7 (IPN 036-14470-10)	
R222	Changed from 47k (IPN 036-15470-10) to 4k7 (IPN 036-14470-10)	
R224	Changed from 1k5 (IPN 036-14150-10) to 390Ω (IPN 036-13390-10)	
R228	Changed from 4k7 (IPN 036-14470-10) to 390Ω (IPN 036-13390-10)	
R229	Changed from 56k (IPN 036-15560-10) to 6k8 (IPN 036-14680-10)	
349-00020-36	The two M3x8 Torx screws which secure the module into the rack frame have been replaced by M3x8 Pozidriv screws (IPN 349-00020-55) (750101/2/3/5/6).	

Note: The T838 and T839 share the same basic design and are built on the same PCB. While most components in this design are common to both products, there are a number of components that are placed in only one product.

Because the circuit diagrams for this design cover both products, we have indicated on the diagrams those components which are placed only in the T838 by enclosing them in a labelled box. The circuit reference for each of these components is also prefixed with the "*"character.

The "*" character is used in this parts list to indicate components used only in the T838.

Ref	Var	IPN	Description
C129		015-23680-08	CAP CER 0805 680P 10% X7R 50V
C131		015-27100-10	CAP CER 0805 1M+80-20% Y5V 16V
C132		015-24100-08	CAP CER 0805 1N 10% X7R 50V
C133		015-23680-08	CAP CER 0805 680P 10% X7R 50V
C137		015-23680-08	CAP CER 0805 680P 10% X7R 50V
C138		015-24470-08	CAP CER 0805 4N7 10% X7R 50V
C139		015-23680-08	CAP CER 0805 680P 10% X7R 50V
C141		014-07100-02	CAP TANT CHIP 1U0 3.2 X 1.6MM
C143		015-23680-08	CAP CER 0805 680P 10% X7R 50V
C145		015-23680-08	CAP CER 0805 680P 10% X7R 50V
C147		015-24470-08	CAP CER 0805 4N7 10% X7R 50V
C149		015-23680-08	CAP CER 0805 680P 10% X7R 50V
C151		015-23680-08	CAP CER 0805 680P 10% X7R 50V
C153		015-23680-08	CAP CER 0805 680P 10% X7R 50V
C155		015-25100-08	CAP CER 0805 10N 10% X7R 50V
C159		015-23680-08	CAP CER 0805 680P 10% X7R 50V
C161		015-23680-08	CAP CER 0805 680P 10% X7R 50V
C162		015-23680-08	CAP CER 0805 680P 10% X7R 50V
C164		015-24470-08	CAP CER 0805 4N7 10% X7R 50V
C165		015-23680-08	CAP CER 0805 680P 10% X7R 50V
C167		015-24100-08	CAP CER 0805 1N 10% X7R 50V
C169		014-07470-03	L) CAP TANT SMD 4U7 35V 20%
C171		015-24470-08	CAP CER 0805 4N7 10% X7R 50V
C173		015-23680-08	CAP CER 0805 680P 10% X7R 50V
C174		015-23680-08	CAP CER 0805 680P 10% X7R 50V
C176		015-06100-08	CAP CER 1206 100N 10% X7R 50V
C178		015-25100-08	CAP CER 0805 10N 10% X7R 50V
C179		015-06150-08	CAP CER1206150N10% X7R25VW 25V
C180		015-23680-08	CAP CER 0805 680P 10% X7R 50V
C181		015-23100-01	CAP CER 0805 100P 5% NPO 50V
C182		015-24470-08	CAP CER 0805 4N7 10% X7R 50V
C184		015-25100-08	CAP CER 0805 10N 10% X7R 50V
C185		015-23680-08	CAP CER 0805 680P 10% X7R 50V
C186		015-23680-08	CAP CER 0805 680P 10% X7R 50V
C187		015-06100-08	CAP CER 1206 100N 10% X7R 50V
C188		014-08100-00	CAP TANT CHIP 10M 16VW +-20%
C189		015-25100-08	CAP CER 0805 10N 10% X7R 50V
C190		015-23680-08	CAP CER 0805 680P 10% X7R 50V
C192		015-06100-08	CAP CER 1206 100N 10% X7R 50V
C193		015-06100-08	CAP CER 1206 100N 10% X7R 50V
C195		014-08100-00	CAP TANT CHIP 10M 16VW +-20%
C201		014-07470-03	L) CAP TANT SMD 4U7 35V 20%
*C203		015-03680-06	CAP CER 1210 680P NPO200VGRM42
*C204		015-03680-06	CAP CER 1210 680P NPO200VGRM42
C205		015-06100-08	CAP CER 1206 100N 10% X7R 50V
*C206		015-03680-06	CAP CER 1210 680P NPO200VGRM42
C207		015-06100-08	CAP CER 1206 100N 10% X7R 50V
C215		015-23680-08	CAP CER 0805 680P 10% X7R 50V
C216		015-24470-08	CAP CER 0805 4N7 10% X7R 50V
C218		015-23680-08	CAP CER 0805 680P 10% X7R 50V
C220		015-23680-08	CAP CER 0805 680P 10% X7R 50V
C221		015-06100-08	CAP CER 1206 100N 10% X7R 50V
C222		015-24470-08	CAP CER 0805 4N7 10% X7R 50V
C223		015-24100-08	CAP CER 0805 1N 10% X7R 50V
C224		015-23680-08	CAP CER 0805 680P 10% X7R 50V
C225		015-03680-06	CAP CER 1210 680P NPO200VGRM42
C226		015-23680-08	CAP CER 0805 680P 10% X7R 50V
C227		015-03680-06	CAP CER 1210 680P NPO200VGRM42
C229		015-03680-03	CAP CER 680P 5% NPO100V GRH111
C259		015-23680-08	CAP CER 0805 680P 10% X7R 50V
C261		015-24470-08	CAP CER 0805 4N7 10% X7R 50V
C268		029-02220-02	CAP MICA 5 CASE 22P 5%
C270		029-02560-03	CAP MICA 10 CASE 56P 2%
C271		029-02470-03	CAP MICA 10 CASE 47P 2%
C272		029-02560-03	CAP MICA 10 CASE 56P 2%
C273		029-02220-02	CAP MICA 5 CASE 22P 5%
C294		015-23680-08	CAP CER 0805 680P 10% X7R 50V
C295		015-24470-08	CAP CER 0805 4N7 10% X7R 50V
C297		015-23680-08	CAP CER 0805 680P 10% X7R 50V
C298		015-24470-08	CAP CER 0805 4N7 10% X7R 50V
D101		001-10000-70	(S) DIODE SMD BAV70 D-SW SOT23
D103		008-00013-32	(S) LED 3 RED LO CURRENT NO MTG
D105		001-10000-70	(S) DIODE SMD BAV70 D-SW SOT23
D107		008-00013-35	(S) LED 3 GRN LO CURRENT NO MTG
D109		008-00013-32	(S) LED 3 RED LO CURRENT NO MTG
D111		001-10000-70	(S) DIODE SMD BAV70 D-SW SOT23
D113		001-00011-60	(S) DIODE SR2607 -- USE MR750
D201		001-00013-45	(S) DIODE SCHTTKY 1SS97/2
D202		001-10000-70	(S) DIODE SMD BAV70 D-SW SOT23
D203		001-00013-45	(S) DIODE SCHTTKY 1SS97/2
IC101		002-10003-24	(S) IC SMD 324 4X O-AMP SO14
IC103		002-10003-24	(S) IC SMD 324 4X O-AMP SO14
IC105		002-10003-58	(S) IC SMD LM358 DUAL O-AMP
IC107		002-10003-17	(S) IC LM317L REG S0-8 100MA
IC109		002-10003-17	(S) IC LM317L REG S0-8 100MA
#IC201	10	004-00687-02	MODULE M68702L 135-160MHZ 60W
#IC201	20	004-00687-03	MODULE M68702H 150-174MHZ 60W
IC204		002-10006-62	(S)IC SMD LMC662CM 2X O-AMP
L101		065-10004-20	BEAD FE SMD CBD 4.6/3/3-4S2
L103		065-10004-20	BEAD FE SMD CBD 4.6/3/3-4S2
L105		065-10004-20	BEAD FE SMD CBD 4.6/3/3-4S2
*L201		056-10330-02	(L) IND SMD 330NH
L203		065-10004-20	BEAD FE SMD CBD 4.6/3/3-4S2
L206		056-14150-02	(L) IND SMD 1.5UH
L208		056-14150-02	(L) IND SMD 1.5UH
L215		052-08340-40	COIL A/W 4T/4.0MM SMD 0.8MM
L217		052-08340-40	COIL A/W 4T/4.0MM SMD 0.8MM
L233		056-10330-02	(L) IND SMD 330NH
L239		056-10330-02	(L) IND SMD 330NH
L241		052-08360-20	COIL A/W 2T/6.0MM SMD 0.8MM
L243		052-08340-20	COIL A/W 2T/4.0MM SMD 0.8MM
L245		052-08345-10	COIL A/W 1T/4.5MM SMD 0.8MM
L247		052-08340-20	COIL A/W 2T/4.0MM SMD 0.8MM
L248		052-08345-10	COIL A/W 1T/4.5MM SMD 0.8MM
L249		052-08360-20	COIL A/W 2T/6.0MM SMD 0.8MM
L264		056-10330-02	(L) IND SMD 330NH
LINK1		240-00020-68	HEADER 2W PCB MTG STD
LINK2		036-10000-00	RES M/F 0805 ZERO OHM
LINK201		240-00020-59	HEADER 3 W 1 R PCB MTG
PL101		240-00010-55	PLUG 15 W D RANGE W/W PNL MT
Q111		000-10008-57	(S) XSTR SMD BCW70 PNP SOT23 SS
Q113		000-10008-48	(S) XSTR SMD BCW60 NPN SOT23 SS
Q115		000-10008-57	(S) XSTR SMD BCW70 PNP SOT23 SS
Q117		000-10008-17	(S) XSTR SMD BC817-25 NPN SOT23
Q119		000-10008-48	(S) XSTR SMD BCW60 NPN SOT23 SS
Q121		000-10017-00	LS) XSTR SMD BF170LT1 SOT23
Q123		000-10008-57	(S) XSTR SMD BCW70 PNP SOT23 SS
Q125		000-10008-57	(S) XSTR SMD BCW70 PNP SOT23 SS
Q127		000-10008-57	(S) XSTR SMD BCW70 PNP SOT23 SS
Q129		000-10008-17	(S) XSTR SMD BC817-25 NPN SOT23
Q131		000-10017-00	LS) XSTR SMD BF170LT1 SOT23
Q133		000-10008-48	(S) XSTR SMD BCW60 NPN SOT23 SS
Q135		000-10008-17	(S) XSTR SMD BC817-25 NPN SOT23
Q136		000-10008-17	(S) XSTR SMD BC817-25 NPN SOT23
Q137		000-00030-95	(S) XSTR 2N6107 PNP TO220 AF
Q201		000-10008-48	(S) XSTR SMD BCW60 NPN SOT23 SS
R101		036-14100-00	RES M/F 0805 1K 5%
R103		036-15330-00	RES M/F 0805 33K 5%
R104		036-16470-00	RES M/F 0805 470K 5%
R117		036-16220-00	RES M/F 0805 220K 5%
R118		036-15270-00	RES M/F 0805 27K 5%
R119		036-16470-00	RES M/F 0805 470K 5%
R123		036-14100-00	RES M/F 0805 1K 5%
R124		036-16100-00	RES M/F 0805 100K 5%
R125		036-15100-00	RES M/F 0805 10K 5%
R126		036-14100-00	RES M/F 0805 1K 5%
R127		036-15100-00	RES M/F 0805 10K 5%
R128		036-15220-00	RES M/F 0805 22K 5%
R129		036-17100-00	RES M/F 0805 1M 5%
R130		036-14220-00	RES M/F 0805 2K2 5%
R131		036-16180-00	RES M/F 0805 180K 5%
R132		036-14100-00	RES M/F 0805 1K 5%
R133		036-15100-00	RES M/F 0805 10K 5%
R134		036-13470-00	RES M/F 0805 470E 5%
R135		036-13680-00	RES M/F 0805 680E 5%
R136		036-15100-00	RES M/F 0805 10K 5%
R137		036-13470-00	RES M/F 0805 470E 5%
R138		036-15100-00	RES M/F 0805 10K 5%
R141		036-15100-00	RES M/F 0805 10K 5%
R142		036-15100-00	RES M/F 0805 10K 5%
R143		036-15100-00	RES M/F 0805 10K 5%
R144		036-15820-00	RES M/F 0805 82K 5%
R145		036-15470-00	RES M/F 0805 47K 5%
R146		036-14180-00	RES M/F 0805 1K8 5%
R148		036-14820-00	RES M/F 0805 8K2 5%
R149		036-13470-00	RES M/F 0805 470E 5%
R150		036-12220-00	RES M/F 0805 22E 5%
R151		036-15100-00	RES M/F 0805 10K 5%
R152		036-15100-00	RES M/F 0805 10K 5%
R153		036-14680-00	RES M/F 0805 6K8 5%
R154		036-14680-00	RES M/F 0805 6K8 5%
R155		036-13220-00	RES M/F 0805 220E 5%
R156		036-13100-00	RES M/F 0805 100E 5%

 Copyright TEL

Ref	Var	IPN	Description
R157		036-12220-00	RES M/F 0805 22E 5%
R158		036-14100-00	RES M/F 0805 1K 5%
R159		036-15100-00	RES M/F 0805 10K 5%
R160		036-14470-00	RES M/F 0805 4K7 5%
R161		036-14100-00	RES M/F 0805 1K 5%
R162		036-17100-00	RES M/F 0805 1M 5%
R163		036-13680-00	RES M/F 0805 680E 5%
R164		036-14220-00	RES M/F 0805 2K2 5%
R165		036-14100-00	RES M/F 0805 1K 5%
R166		036-13680-00	RES M/F 0805 680E 5%
R168		036-15100-10	RES M/F 0805 10K 1%
R169		036-14100-00	RES M/F 0805 1K 5%
R170		036-14100-00	RES M/F 0805 1K 5%
R171		036-14100-00	RES M/F 0805 1K 5%
R172		036-15100-10	RES M/F 0805 10K 1%
R173		036-13470-00	RES M/F 0805 470E 5%
R174		036-13220-00	RES M/F 0805 220E 5%
R175		036-16220-00	RES M/F 0805 220K 5%
R176		036-15100-00	RES M/F 0805 10K 5%
R177		036-14470-00	RES M/F 0805 4K7 5%
R178		036-16100-00	RES M/F 0805 100K 5%
R179		036-15100-00	RES M/F 0805 10K 5%
R180		036-16150-00	RES M/F 0805 150K 5%
R181		036-14560-00	RES M/F 0805 5K6 5%
R182		036-16100-00	RES M/F 0805 100K 5%
R183		036-14470-00	RES M/F 0805 4K7 5%
R184		036-14100-00	RES M/F 0805 1K 5%
R185		036-03100-02	RES 100E 1206 200V 250MW RC01
R186		036-13100-00	RES M/F 0805 100E 5%
R187		036-03150-03	RES 1218 PWR CHIP 150E 20% 1W
R188		036-13220-00	RES M/F 0805 220E 5%
R189		036-12100-00	RES M/F 0805 10E 5%
R190		036-12220-00	RES M/F 0805 22E 5%
R191		036-14100-10	RES M/F 0805 CHIP 1K 1%
R192		036-13220-10	RES 0805 220E 1%
R193		036-12100-00	RES M/F 0805 10E 5%
R194		036-03220-03	RES 1218 PWR CHIP 220E 20% 1W
R195		036-14220-00	RES M/F 0805 2K2 5%
R196		036-13100-00	RES M/F 0805 100E 5%
R197		036-10000-00	RES M/F 0805 ZERO OHM
*R201		036-03330-03	L) RES 1218 PWR 330E 20% 1W
*R202		036-02100-03	L) RES 1218 PWR 10E 20% 1W
R203		036-02100-02	RES 10E 1206 200V 250MW RC01
*R204		036-03330-03	L) RES 1218 PWR 330E 20% 1W
R205		036-02100-02	RES 10E 1206 200V 250MW RC01
R207		036-15470-10	RES M/F 0805 47K 1%
R209		036-14150-10	RES MF 0805 CHIP 1K5 1%
R210		036-14470-10	RES M/F 0805 CHIP 4K7 1%
R212		036-15100-00	RES M/F 0805 10K 5%
R213		036-14390-00	RES M/F 0805 3K9 5%
R214		036-14470-00	RES M/F 0805 4K7 5%
R218		036-13390-10	RES MF 0805 CHIP 390E 1%
R219			available as sub-assembly only - refer to (16) (045-06100-05) in the mechanical parts list
R220		036-15470-10	RES M/F 0805 47K 1%
R222		036-15470-10	RES M/F 0805 47K 1%
R224		036-14150-10	RES MF 0805 CHIP 1K5 1%
R225		030-03120-00	RES FILM 120E 5% 0.25W 7X2.5
R228		036-14470-10	RES M/F 0805 CHIP 4K7 1%
R229		036-15560-10	RES MF 0805 CHIP 56K 1%
R231		030-03120-00	RES FILM 120E 5% 0.25W 7X2.5
R237		045-04470-00	RES NTC SMD 4K7 5% 20MW
RV101		042-04500-05	RES PRESET SMD 5K CER 4MM SQ
RV103		042-05500-05	RES PRESET SMD 50K CER 4MM SQ
RV105		042-04500-05	RES PRESET SMD 5K CER 4MM SQ
RV107		042-05500-05	RES PRESET SMD 50K CER 4MM SQ
RV109		044-04200-03	RES PRE 2K 10 TURN PNL MTG
RV113		042-06500-05	RES PRESET SMD 500K CER 4MM SQ
RV115		042-04220-05	RES PRESET SMD 2K CER 4MM SQ
SK101		240-10000-05	CONN SMD SKT 8W 2R M-MATCH
SK103		240-10000-05	CONN SMD SKT 8W 2R M-MATCH
*SK203		240-02100-44	SKT COAX MINI JACK PCB MT ANG.

Ref	Var	IPN	Description

T838 Mechanical & Miscellaneous Parts (220-01404-03)

IPN	Legend	Description
000-00030-95	9	Q137
004-00687-02/3	14	#IC201
012-04150-01	22	CAP CER F/THRU 1N5 NO LEAD
045-06100-05	16	ASSY 100K NTC FOR MODULE R219
051-00006-02		SOLDER SPRING 1.3MM A4M1877 Support for front panel LED solder joints.
051-00641-01	3	COAX SEMI-RIG N-TYPE EXTN
051-00642-01	28	COAX SEMI-RIG N-TYPE EXTN
065-00010-13	21	BEAD FER 7D 1.9X0.9X3.8
201-00030-02		WIRE T/C 7/0.2 PVC RED Front panel LEDs.
201-00030-10		WIRE T/C 7/0.2 PVC BLACK Front panel LEDs.
201-00050-25		AUTO 154 RED 41/0.3 PVC DC+ from D-range PCB.
201-00050-26		AUTO 154 BLACK 41/0.3 PVC DC- from D-range PCB.
206-00010-11		COAX 50 OHM RG316-U PTFE Coax from BNC connector to *SK203.
219-02591-00	18	LOOM RIBBON 8 WAY FOR PA
219-02592-00		CABLE ASSY RG223/U N TO BNC Exciter/PA connecting cable.
220-01402-02	2	PCB T838/9 TEFLON DIRNL COUPLER
220-01404-03	1	PCB T838/9 PA MODULE DESIGN
240-00010-55	20	PLUG 15 W D RANGE W/W PNL MT PL101
240-00100-43		PLG COAX MINI PIN CRIMP 1.5D Coax from BNC connector to *SK203.
240-02010-54		SKT 15W DRANGE PNL MTG 125 C Matching socket for D-range plug PL101.
240-02100-06	27	SKT COAX N TYPE PNL MTG OP-TER
240-02100-17	29	SKT COAX BNC PNL JAC CRP RG316
240-04020-62		SKT 2 W RECEP SHORTING LINK LINK1
240-06010-14		CLAMP LATCHING 15 W D RANGE Cover for D-range socket.
240-06010-15	25	BLOCK LATCHING 15W D RANGE
240-06010-44	26	HOOD CONN UHF & N-TYPE
303-23120-00	30	COVER A3M2288 HOLE BLANKING
303-23146-00	38	COVER SIDE T838/9PA
308-01007-01	35	HANDLE BASE STATION SERIES II
308-13122-02	6	HEATSINK T838/9 PA COMPLETE
316-06617-00	32	PNL PA NO INP DRV SER II SNGL
319-01152-00	19	SHIELD A3M2250 F/THRU MTG
319-01190-01	4	SHIELD WALL HARM. FILTER
319-01201-00	31	SHIELD LID HARM. FILTER
319-01202-00	5	SHIELD PA CONTROL CIRCUIT
319-30064-00	13	SPACER HSINK RF MODULE
345-00040-16	23	SCRW M3X20MM P/POZ ST BZ
349-00010-59	17	SCRW 6-32 X 3/8 P/PH T/T ZP
349-00020-07	7	SCRW 4-40 X 5/16 P/POZ T/T BLK
349-00020-09	12	SCRW T/T 4-40X3/8 IN P/POZ BLK
349-00020-36	37	LIM)SCREW TT M3X8m PANTORX BLK
352-00010-29	36	NUT M4 NYLOC HEX
353-00010-10	11	WSHR M3 FLAT 7MMX0.6MM ST BZ
356-00010-03	24	TAG SOLDER 3MM LONG M614/3.2
356-00010-05	15	TAG SOLDER 4MM LONG M6144/4.2
360-00010-41	34	BUSH SHORTY BLK
362-00010-07	8	GASKET SIL INSULATING TO-220
362-00010-13	10	BUSH INSULATING 1.1MM TOP HAT
362-00010-33	33	GROMMET LED MTG 3MM
365-00100-20		LABEL WHITE S/A 28X11MM
365-01391-01		LABEL 30X10.8 T/MARK VOID
365-01538-00		LABEL WARNING 60W/PWR CLAMP
369-00010-14		TIE CABLE NYLON 100X2.6MM
399-00010-56		BAG PLASTIC 200X250MM
400-00020-07		SLEEVING 2MM SIL RUBBER
410-00010-43		PKG T296 AMPAC REF 73-46

 Copyright TEL

replace A4 pages D5.2.7/D5.2.8 with A3 pages D5.2.7/D5.2.8

replace A4 pages D5.2.7/D5.2.8 with A3 pages D5.2.7/D5.2.8

Copyright TEL

T838 Grid Reference Index (IPN 220-01404-03)

How To Use This Grid Reference Index

The first digit in the PCB layout reference is a "1" or "2", indicating the top or bottom side layout respectively, and the last two characters give the location of the component on that diagram.

The first digit in the circuit diagram reference is the sheet number, and the last two characters give the location of the component on that sheet.

Note:

This grid reference index covers both the T838 and T839 and is reproduced in both PCB Information sections for your convenience.

Device	PCB	Circuit
*C101	1:E4	1-B8
*C103	1:E4	1-B9
*C105	1:B3	1-D8
*C107	1:B3	1-D9
*C109	1:B3	1-D8
*C111	1:C4	1-D8
*C113	1:B5	1-F8
*C115	1:B5	1-F8
*C117	1:B5	1-F9
*C119	1:B5	1-G8
*C121	1:D4	1-B6
*C123	1:D4	1-B6
*C124	1:E3	1-C6
*C125	1:C4	1-D7
*C127	1:C4	1-D6
C129	1:B3	1-H5
C131	1:B3	1-J6
C132	1:A3	1-K7
C133	1:B4	1-K8
C137	1:B2	1-K8
C138	1:B2	1-L8
C139	1:B4	1-M6
C141	1:B3	1-M8
C143	1:E3	1-E7
C145	1:E3	1-F7
C147	1:D3	1-F6
C149	1:D3	1-F7
C151	1:C5	1-D5
C153	1:B5	1-D3
C155	1:D3	1-G3
C159	1:B3	1-H2
C161	1:B4	1-K4
C162	1:B3	1-L4
C164	1:B3	1-L4
C165	1:B3	1-M4
C167	1:K3	1-P3
C169	1:K3	1-P3
C171	1:K3	1-Q3
C173	1:D4	1-B0
C174	1:E4	1-B0
C176	1:D4	1-E0
C178	1:C4	1-F0
C179	1:D3	1-G2
C180	1:E2	1-H0
C181	1:D3	1-G0
C182	1:D3	1-H1
C184	1:D4	1-G0
C185	1:D2	1-J1
C186	1:E2	1-J0
C187	1:D3	1-K1
C188	1:C2	1-L1
C189	1:C3	1-M1
C190	1:C3	1-N1
C192	1:B2	1-N1
C193	1:B2	1-P1
C195	1:C2	1-Q1
C201	1:J7	2-L5
*C202	1:H3	2-B8
*C203	1:P7	2-C1
*C204	1:M6	2-E1
C205	1:L7	2-I5
*C206	1:P6	2-C1
C207	1:K7	2-K5
*C208	1:H3	2-C8
*C209	1:C5	2-D8
*C210	1:C5	2-E8
*C212	1:D5	2-G9
*C213	1:D4	2-H9
C215	1:D5	2-J8
C216	1:H6	2-B6
*C217	1:P3	2-E3
C218	1:H5	2-C6
*C219	1:P2	2-E3
C220	1:E5	2-D6
C221	1:E5	2-N8
C222	1:E5	2-E6
C223	1:D5	2-G7
C224	1:D5	2-M8
C225	1:L6	2-I4
C226	1:D4	2-H7
C227	1:K6	2-J4
C229	1:H6	2-K4
*C230	1:L4	2-I2
*C231	1:L4	2-I1
*C232	1:K4	2-J1
*C233	1:K4	2-K2
*C234	1:J4	2-L1
*C240	1:H4	2-K1
C259	1:F7	2-Q3
C261	1:F6	2-Q4
C268	1:E6	2-S2
C270	1:D6	2-T2
C271	1:C6	2-T2
C272	1:B6	2-U2
C273	1:B6	2-V2
C294	1:D6	2-R1
C295	1:D6	2-R1
C297	1:C5	2-L8
C298	1:C6	2-L8
D101	1:B3	1-H5
D101	1:B3	1-G5
D103	1:P7	1-K9
D105	1:C2	1-J2
D105	1:C2	1-J2
D107	1:P7	1-K5
D109	1:P6	1-L5
D111	1:C2	1-M1
D111	1:C2	1-M1
D113	1:F7	1-Q2
D201	1:F6	2-Q3
D202	1:D4	2-I8
D202	1:D4	2-I8
D203	1:E6	2-R2
IC101	1:D4	1-C6
IC101	1:D4	1-G0
IC101	1:D4	1-B8
IC101	1:D4	1-C0
IC101	1:D4	1-N0
IC103	1:C4	1-D4
IC103	1:C4	1-J8
IC103	1:C4	1-F0
IC103	1:C4	1-J5
IC103	1:C4	1-E3
IC105	1:D3	1-M0
IC105	1:D3	1-P0
IC105	1:D3	1-G2
IC107	1:D3	1-K1
IC109	1:B2	1-N1
#IC201	1:K7	2-I4
*#IC202	1:K4	2-I1
*IC203	1:N5	2-F2
IC204	1:D5	2-H7
IC204	1:D5	2-H8
IC204	1:D5	2-N8
*IC205	1:G5	2-P2
L101	1:K3	1-P3
L103	1:K2	1-Q3
L105	1:E2	1-K0
*L201	1:P7	2-C1
*L202	1:H3	2-B8
L203	1:L7	2-I6
*L204	1:C5	2-D8
L206	1:H5	2-B7
L208	1:E5	2-D7
*L211	1:P2	2-D3
L215	1:L7	2-I5
L217	1:J7	2-K5
*L223	1:J4	2-K2
*L230	1:L4	2-I3
*L231	1:L4	2-I2
L233	1:F6	2-Q3
*L236	1:H6	2-M2
L239	1:E5	2-R2
L241	1:D6	2-S3
L243	1:C6	2-T3
L245	1:C7	2-T2
L247	1:C6	2-U3
L248	1:D7	2-U2
L249	1:B6	2-V3
L264	1:C6	2-L8
LINK1	1:D3	1-L0
LINK2	1:P6	1-D1
LINK201	1:D5	2-F8
P101	1:A5	1-R9
P103	1:K3	1-R0
P105	1:K2	1-R0
P201	1:B6	2-V3
PL101	1:L3	1-C2
*Q101	1:C3	1-C9
*Q103	1:B3	1-E8
*Q105	1:C4	1-D7
*Q107	1:B5	1-F8
*Q109	1:A5	1-G9
Q111	1:A3	1-J7
Q113	1:A3	1-K6
Q115	1:A3	1-L7
Q117	1:B4	1-K8
Q119	1:B4	1-L6
Q121	1:B3	1-L8
Q123	1:E3	1-E7
Q125	1:E3	1-F7
Q127	1:D3	1-G7
Q129	1:B4	1-L4
Q131	1:B3	1-M5
Q133	1:D4	1-D0
Q135	1:E2	1-H0
Q136	1:E3	1-H0
Q137	1:D2	1-J0
Q201	1:D5	2-K8
R101	1:E4	1-A8
*R102	1:E4	1-A9
R103	1:E4	1-A8
R104	1:E4	1-B9
*R105	1:D4	1-C8
*R106	1:B3	1-C8
*R107	1:C4	1-D7
*R108	1:B3	1-E9
*R109	1:C3	1-E9
*R111	1:B5	1-E8
*R112	1:B5	1-E9
*R113	1:B5	1-F9
*R114	1:C4	1-A6
*R115	1:C5	1-A6
*R116	1:D4	1-A7
R117	1:C4	1-A6
R118	1:D4	1-B6
R119	1:D4	1-C7
*R120	1:E3	1-H7
*R121	1:C4	1-C7
*R122	1:C4	1-D6
R123	1:B4	1-H7
R124	1:B4	1-H8
R125	1:B4	1-H8
R126	1:B3	1-H6
R127	1:A3	1-H7
R128	1:A3	1-J7
R129	1:B4	1-J9
R130	1:B4	1-J8
R131	1:A3	1-J7
R132	1:B5	1-J8
R133	1:A3	1-K7
R134	1:B3	1-K6
R135	1:P7	1-K9
R136	1:A3	1-K7
R137	1:B3	1-K6
R138	1:B4	1-L6

Copyright TEL

Device	PCB	Circuit
R141	1:E3	1-C6
R142	1:E3	1-E7
R143	1:E4	1-F6
R144	1:D3	1-F6
R145	1:E4	1-F7
R146	1:E4	1-G7
R148	1:C5	1-D5
R149	1:C5	1-C4
R150	1:C4	1-F0
R151	1:B5	1-D5
R152	1:B5	1-C3
R153	1:C5	1-F4
R154	1:C5	1-F3
R155	1:D3	1-F2
R156	1:D3	1-F3
R157	1:D4	1-G0
R158	1:C4	1-H3
R159	1:C4	1-H4
R160	1:C3	1-J5
R161	1:B3	1-J3
R162	1:B3	1-K4
R163	1:P8	1-K5
R164	1:B3	1-K4
R165	1:B4	1-K4
R166	1:P7	1-L5
R168	1:E4	1-A1
R169	1:E4	1-A0
R170	1:D4	1-B0
R171	1:E4	1-B0
R172	1:E4	1-B0
R173	1:P6	1-C1
R174	1:P6	1-C1
R175	1:D4	1-C0
R176	1:D4	1-D0
R177	1:D4	1-D0
R178	1:D3	1-E1
R179	1:D4	1-E0
R180	1:D4	1-E0
R181	1:E3	1-F2
R182	1:D4	1-E0
R183	1:D4	1-F1
R184	1:E3	1-G1
R185	1:E2	1-J0
R186	1:D2	1-H1
R187	1:E2	1-H0
R188	1:D2	1-L1
R189	1:D2	1-L1
R190	1:C3	1-M1
R191	1:B2	1-P1
R192	1:B2	1-P1
R193	1:C2	1-Q1
R194	1:D2	1-H0
R195	1:D3	1-J0
R196	1:D3	1-J0
R197	1:D3	1-L1
*R201	1:N6	2-D1
*R202	1:N6	2-D1
R203	1:L7	2-I5
*R204	1:N6	2-D1
R205	1:K7	2-K4
*R206	1:C5	2-E8
R207	1:D4	2-F8
*R208	1:C5	2-G9
R209	1:D5	2-G8
R210	1:D5	2-G8
*R211	1:D4	2-H9
R212	1:D4	2-I8
R213	1:D5	2-E7
R214	1:E4	2-J8
*R215	1:H3	2-B8
*R216	1:P6	2-E2
*R217	1:P6	2-E2
R218	1:E5	2-E7
R219	1:H6	2-B6
R220	1:E5	2-F7
R222	1:D5	2-G7

Device	PCB	Circuit
*R223	1:F2	2-P2
R224	1:D4	2-G7
R225	1:E6	2-R3
R228	1:E4	2-G7
R229	1:D4	2-H7
*R230	1:L4	2-I2
R231	1:F5	2-Q2
*R232	1:K4	2-K1
R237	1:C5	2-K8
RV101	1:C4	1-H8
RV103	1:C4	1-H6
RV105	1:C3	1-J5
RV107	1:C3	1-J3
RV109	1:P5	1-C2
*RV111	1:P5	1-D1
RV113	1:C3	1-D0
RV115	1:C3	1-K0
SK101	1:K3	1-A2
SK103	1:B4	1-B2
*SK201	1:N3	2-D3
*SK203	1:N7	2-C1

Device	PCB	Circuit

Device	PCB	Circuit

Copyright TEL

5.3 T839 Power Amplifier PCB

This section contains the following information.

IPN	Section	Page
220-01404-03	Parts List	5.3.3
	Mechanical & Miscellaneous Parts	5.3.6
	Mechanical Assembly	5.3.7
	Grid Reference Index	5.3.9
	PCB Layout - Bottom Side	5.3.11
	PCB Layout - Top Side	5.3.12
	Control Section Circuit Diagram	5.3.13
	RF & Thermistor Control Sections Circuit Diagram	5.3.14

Copyright TEL

T839 Parts List (IPN 220-01404-03)

How To Use This Parts List

The components listed in this parts list are divided into two main types: those with a circuit reference (e.g. C2, D1, R121, etc.) and those without (miscellaneous and mechanical).

Those with a circuit reference are grouped in alphabetical order and then in numerical order within each group. Each component entry comprises three or four columns: the circuit reference, variant (if applicable), IPN and description. A number in the variant column indicates that this is a variant component which is fitted only to the product type listed. Static sensitive devices are indicated by an (S) at the start of the description column.

The miscellaneous and mechanical section lists the variant and common parts in IPN order. Where possible, a number in the legend column indicates their position in the mechanical assembly drawing.

The Parts List Amendments box below lists component changes that took place after the parts list and diagrams in this section were compiled. These changes (e.g. value changes, added/deleted components, etc.) are listed by circuit reference in alphanumeric order and supersede the information given in the parts list or diagrams. Components without circuit references are listed in IPN order.

Parts List Amendments

D101, D105	Removed from the main PCB and replaced by two 1N4148 diodes (IPN 001-50012-00) placed on the D-range PCB: one soldered between PL101 pins 5 and 7 (cathode), the other between PL101 pins 6 and 8 (cathode). To allow external power meters to read zero and still provide meter overvoltage protection (710978).	
D113	Changed from MR750 (IPN 001-00011-60) to MR2520L (IPN 001-00012-90) to provide overvoltage transient suppression (750087/88/89/90/91/92).	
IC204	Changed from LMC622CM to LM358 (710382).	
*L236	Changed from through-hole link (IPN 051-00640-01) to SMD link (IPN 051-00640-02) (710580).	
R123, R158	Changed from 1k resistors (IPN 036-14100-00) to BA592 diodes (IPN 001-10059-20) to allow external power meters to read zero (710978).	
*R206	Changed from 390Ω (IPN 036-13390-10) to 100Ω (IPN 036-13100-10)	100k thermistor assembly replaced with 10k item; values of associated components changed accordingly (710394/411/447).
R207, *R208	Changed from 47k (IPN 036-15470-10) to 4k7 (IPN 036-14470-10)	
R209	Changed from 1k5 (IPN 036-14150-10) to 390Ω (IPN 036-13390-10)	
R210	Changed from 4k7 (IPN 036-14470-10) to 390Ω (IPN 036-13390-10)	
*R211	Changed from 56k (IPN 036-15560-10) to 6k8 (IPN 036-14680-10)	
R213	Changed from 3k9 (IPN 036-14390-00) to 560Ω (IPN 036-13560-00)	
*R215	Changed from 100k NTC (IPN 045-06100-05) to 10k NTC (IPN 045-05100-02)	
R218	Changed from 390Ω (IPN 036-13390-10) to 100Ω (IPN 036-13100-10)	
R219	Changed from 100k NTC (IPN 045-06100-05) to 10k NTC (IPN 045-05100-02)	
R220, R222	Changed from 47k (IPN 036-15470-10) to 4k7 (IPN 036-14470-10)	
R224	Changed from 1k5 (IPN 036-14150-10) to 390Ω (IPN 036-13390-10)	
R228	Changed from 4k7 (IPN 036-14470-10) to 390Ω (IPN 036-13390-10)	
R229	Changed from 56k (IPN 036-15560-10) to 6k8 (IPN 036-14680-10)	
258-00010-03	Cooling fan: some T839 PAs may be fitted with a different fan (IPN 258-00010-06). If so, a 100µH inductor (IPN 056-00021-02) may be fitted in series in the fan power feed wire with a 10µF capacitor (IPN 025-08100-03) fitted in parallel with this inductor (710977).	
349-00020-36	The two M3x8 Torx screws which secure the module into the rack frame have been replaced by M3x8 Pozidriv screws (IPN 349-00020-55) (750101/2/3/5/6).	

Note: The T838 and T839 share the same basic design and are built on the same PCB. While most components in this design are common to both products, there are a number of components that are placed in only one product.

Because the circuit diagrams for this design cover both products, we have indicated on the diagrams those components which are placed only in the T839 by enclosing them in a labelled box. The circuit reference for each of these components is also prefixed with the "*"character.

The "*" character is used in this parts list to indicate components used only in the T839.

Ref	Var	IPN	Description
*C101		015-23680-08	CAP CER 0805 680P 10% X7R 50V
*C103		015-23680-08	CAP CER 0805 680P 10% X7R 50V
*C105		015-23680-08	CAP CER 0805 680P 10% X7R 50V
*C107		015-23680-08	CAP CER 0805 680P 10% X7R 50V
*C109		015-23680-08	CAP CER 0805 680P 10% X7R 50V
*C111		015-23680-08	CAP CER 0805 680P 10% X7R 50V
*C113		015-23680-08	CAP CER 0805 680P 10% X7R 50V
*C115		015-23680-08	CAP CER 0805 680P 10% X7R 50V
*C117		015-23680-08	CAP CER 0805 680P 10% X7R 50V
*C119		015-23680-08	CAP CER 0805 680P 10% X7R 50V
*C121		015-23680-08	CAP CER 0805 680P 10% X7R 50V
*C123		015-23680-08	CAP CER 0805 680P 10% X7R 50V
*C124		015-23680-08	CAP CER 0805 680P 10% X7R 50V
*C125		015-23680-08	CAP CER 0805 680P 10% X7R 50V
*C127		015-23680-08	CAP CER 0805 680P 10% X7R 50V
C129		015-23680-08	CAP CER 0805 680P 10% X7R 50V
C131		015-27100-10	CAP CER 0805 1M+80-20% Y5V 16V
C132		015-24100-08	CAP CER 0805 1N 10% X7R 50V
C133		015-23680-08	CAP CER 0805 680P 10% X7R 50V
C137		015-23680-08	CAP CER 0805 680P 10% X7R 50V
C138		015-24470-08	CAP CER 0805 4N7 10% X7R 50V
C139		015-23680-08	CAP CER 0805 680P 10% X7R 50V
C141		014-07100-02	CAP TANT CHIP 1U0 3.2 X 1.6MM
C143		015-23680-08	CAP CER 0805 680P 10% X7R 50V
C145		015-23680-08	CAP CER 0805 680P 10% X7R 50V
C147		015-24470-08	CAP CER 0805 4N7 10% X7R 50V
C149		015-23680-08	CAP CER 0805 680P 10% X7R 50V
C151		015-23680-08	CAP CER 0805 680P 10% X7R 50V
C153		015-23680-08	CAP CER 0805 680P 10% X7R 50V
C155		015-25100-08	CAP CER 0805 10N 10% X7R 50V
C159		015-23680-08	CAP CER 0805 680P 10% X7R 50V
C161		015-23680-08	CAP CER 0805 680P 10% X7R 50V
C162		015-23680-08	CAP CER 0805 680P 10% X7R 50V
C164		015-24470-08	CAP CER 0805 4N7 10% X7R 50V
C165		015-23680-08	CAP CER 0805 680P 10% X7R 50V
C167		015-24100-08	CAP CER 0805 1N 10% X7R 50V
C169		014-07470-03	L) CAP TANT SMD 4U7 35V 20%
C171		015-24470-08	CAP CER 0805 4N7 10% X7R 50V
C173		015-23680-08	CAP CER 0805 680P 10% X7R 50V
C174		015-23680-08	CAP CER 0805 680P 10% X7R 50V
C176		015-06100-08	CAP CER 1206 100N 10% X7R 50V
C178		015-25100-08	CAP CER 0805 10N 10% X7R 50V
C179		015-06150-08	CAP CER1206150N10% X7R25VW 25V
C180		015-23680-08	CAP CER 0805 680P 10% X7R 50V
C181		015-23100-01	CAP CER 0805 100P 5% NPO 50V
C182		015-24470-08	CAP CER 0805 4N7 10% X7R 50V
C184		015-25100-08	CAP CER 0805 10N 10% X7R 50V
C185		015-23680-08	CAP CER 0805 680P 10% X7R 50V
C186		015-23680-08	CAP CER 0805 680P 10% X7R 50V
C187		015-06100-08	CAP CER 1206 100N 10% X7R 50V
C188		014-08100-00	CAP TANT CHIP 10M 16VW +-20%
C189		015-25100-08	CAP CER 0805 10N 10% X7R 50V
C190		015-23680-08	CAP CER 0805 680P 10% X7R 50V
C192		015-06100-08	CAP CER 1206 100N 10% X7R 50V
C193		015-06100-08	CAP CER 1206 100N 10% X7R 50V
C195		014-08100-00	CAP TANT CHIP 10M 16VW +-20%
C201		014-07470-03	L) CAP TANT SMD 4U7 35V 20%
*C202		015-24470-08	CAP CER 0805 4N7 10% X7R 50V
C205		015-06100-08	CAP CER 1206 100N 10% X7R 50V
C207		015-06100-08	CAP CER 1206 100N 10% X7R 50V
*C208		015-23680-08	CAP CER 0805 680P 10% X7R 50V
*C209		015-23680-08	CAP CER 0805 680P 10% X7R 50V
*C210		015-24470-08	CAP CER 0805 4N7 10% X7R 50V
*C212		015-24100-08	CAP CER 0805 1N 10% X7R 50V
*C213		015-23680-08	CAP CER 0805 680P 10% X7R 50V
C215		015-23680-08	CAP CER 0805 680P 10% X7R 50V
C216		015-24470-08	CAP CER 0805 4N7 10% X7R 50V
*C217		015-03680-06	CAP CER 1210 680P NPO200VGRM42
C218		015-23680-08	CAP CER 0805 680P 10% X7R 50V
*C219		015-03680-06	CAP CER 1210 680P NPO200VGRM42
C220		015-23680-08	CAP CER 0805 680P 10% X7R 50V
C221		015-06100-08	CAP CER 1206 100N 10% X7R 50V
C222		015-24470-08	CAP CER 0805 4N7 10% X7R 50V
C223		015-24100-08	CAP CER 0805 1N 10% X7R 50V
C224		015-23680-08	CAP CER 0805 680P 10% X7R 50V
C225		015-03680-06	CAP CER 1210 680P NPO200VGRM42
C226		015-23680-08	CAP CER 0805 680P 10% X7R 50V
C227		015-03680-06	CAP CER 1210 680P NPO200VGRM42
C229		015-03680-03	CAP CER 680P 5% NPO100V GRH111
*C230		015-06100-08	CAP CER 1206 100N 10% X7R 50V
*C231		015-03680-06	CAP CER 1210 680P NPO200VGRM42
*C232		015-03680-06	CAP CER 1210 680P NPO200VGRM42
*C233		015-06100-08	CAP CER 1206 100N 10% X7R 50V
*C234		014-07470-03	L) CAP TANT SMD 4U7 35V 20%
*C240		015-03680-03	CAP CER 680P 5% NPO100V GRH111
C259		015-23680-08	CAP CER 0805 680P 10% X7R 50V
C261		015-24470-08	CAP CER 0805 4N7 10% X7R 50V
C268		029-02220-02	CAP MICA 5 CASE 22P 5%
C270		029-02560-03	CAP MICA 10 CASE 56P 2%
C271		029-02470-03	CAP MICA 10 CASE 47P 2%
C272		029-02560-03	CAP MICA 10 CASE 56P 2%
C273		029-02220-02	CAP MICA 5 CASE 22P 5%
C294		015-23680-08	CAP CER 0805 680P 10% X7R 50V
C295		015-24470-08	CAP CER 0805 4N7 10% X7R 50V
C297		015-23680-08	CAP CER 0805 680P 10% X7R 50V
C298		015-24470-08	CAP CER 0805 4N7 10% X7R 50V
D101		001-10000-70	(S) DIODE SMD BAV70 D-SW SOT23
D103		008-00013-32	(S) LED 3 RED LO CURRENT NO MTG
D105		001-10000-70	(S) DIODE SMD BAV70 D-SW SOT23
D107		008-00013-35	(S) LED 3 GRN LO CURRENT NO MTG
D109		008-00013-32	(S) LED 3 RED LO CURRENT NO MTG
D111		001-10000-70	(S) DIODE SMD BAV70 D-SW SOT23
D113		001-00011-60	(S) DIODE SR2607 -- USE MR750
D201		001-00013-45	(S) DIODE SCHTTKY 1SS97/2
D202		001-10000-70	(S) DIODE SMD BAV70 D-SW SOT23
D203		001-00013-45	(S) DIODE SCHTTKY 1SS97/2
IC101		002-10003-24	(S) IC SMD 324 4X O-AMP SO14
IC103		002-10003-24	(S) IC SMD 324 4X O-AMP SO14
IC105		002-10003-58	(S) IC SMD LM358 DUAL O-AMP
IC107		002-10003-17	(S) IC LM317L REG S0-8 100MA
IC109		002-10003-17	(S) IC LM317L REG S0-8 100MA
#IC201	10	004-00687-02	MODULE M68702L 135-160MHZ 60W
#IC201	20	004-00687-03	MODULE M68702H 150-174MHZ 60W
*#IC202	10	004-00687-02	MODULE M68702L 135-160MHZ 60W
*#IC202	20	004-00687-03	MODULE M68702H 150-174MHZ 60W
*IC203		051-00005-36	RFPOWER 3DB HYBRID COUPLER
IC204		002-10006-62	(S)IC SMD LMC662CM 2X O-AMP
*IC205		051-00005-36	RFPOWER 3DB HYBRID COUPLER
L101		065-10004-20	BEAD FE SMD CBD 4.6/3/3-4S2
L103		065-10004-20	BEAD FE SMD CBD 4.6/3/3-4S2
L105		065-10004-20	BEAD FE SMD CBD 4.6/3/3-4S2
*L202		056-14150-02	(L) IND SMD 1.5UH
L203		065-10004-20	BEAD FE SMD CBD 4.6/3/3-4S2
*L204		056-14150-02	(L) IND SMD 1.5UH
L206		056-14150-02	(L) IND SMD 1.5UH
L208		056-14150-02	(L) IND SMD 1.5UH
*L211		056-10330-02	(L) IND SMD 330NH
L215		052-08340-40	COIL A/W 4T/4.0MM SMD 0.8MM
L217		052-08340-40	COIL A/W 4T/4.0MM SMD 0.8MM
*L223		052-08340-40	COIL A/W 4T/4.0MM SMD 0.8MM
*L230		065-10004-20	BEAD FE SMD CBD 4.6/3/3-4S2
*L231		052-08340-40	COIL A/W 4T/4.0MM SMD 0.8MM
L233		056-10330-02	(L) IND SMD 330NH
*L236		051-00640-01	LNK 65.5 COP STPL C/W SLCN SLV
L239		056-10330-02	(L) IND SMD 330NH
L241		052-08360-20	COIL A/W 2T/6.0MM SMD 0.8MM
L243		052-08340-20	COIL A/W 2T/4.0MM SMD 0.8MM
L245		052-08345-10	COIL A/W 1T/4.5MM SMD 0.8MM
L247		052-08340-20	COIL A/W 2T/4.0MM SMD 0.8MM
L248		052-08345-10	COIL A/W 1T/4.5MM SMD 0.8MM
L249		052-08360-20	COIL A/W 2T/6.0MM SMD 0.8MM
L264		056-10330-02	(L) IND SMD 330NH
LINK1		240-00020-68	HEADER 2W PCB MTG STD
LINK2		036-10000-00	RES M/F 0805 ZERO OHM
LINK201		240-00020-59	HEADER 3 W 1 R PCB MTG
PL101		240-00010-55	PLUG 15 W D RANGE W/W PNL MT
*Q101		000-10008-57	(S) XSTR SMD BCW70 PNP SOT23 SS
*Q103		000-10008-17	(S) XSTR SMD BC817-25 NPN SOT23
*Q105		000-10008-17	(S) XSTR SMD BC817-25 NPN SOT23
*Q107		000-10008-57	(S) XSTR SMD BCW70 PNP SOT23 SS
*Q109		000-10008-69	(S) XSTR SMD BC869 PNP 1W SOT89
Q111		000-10008-57	(S) XSTR SMD BCW70 PNP SOT23 SS
Q113		000-10008-48	(S) XSTR SMD BCW60 NPN SOT23 SS
Q115		000-10008-57	(S) XSTR SMD BCW70 PNP SOT23 SS
Q117		000-10008-17	(S) XSTR SMD BC817-25 NPN SOT23
Q119		000-10008-48	(S) XSTR SMD BCW60 NPN SOT23 SS
Q121		000-10017-00	LS) XSTR SMD BF170LT1 SOT23
Q123		000-10008-57	(S) XSTR SMD BCW70 PNP SOT23 SS
Q125		000-10008-57	(S) XSTR SMD BCW70 PNP SOT23 SS
Q127		000-10008-57	(S) XSTR SMD BCW70 PNP SOT23 SS
Q129		000-10008-17	(S) XSTR SMD BC817-25 NPN SOT23
Q131		000-10017-00	LS) XSTR SMD BF170LT1 SOT23
Q133		000-10008-48	(S) XSTR SMD BCW60 NPN SOT23 SS
Q135		000-10008-17	(S) XSTR SMD BC817-25 NPN SOT23

 Copyright TEL

Ref	Var	IPN	Description
Q136		000-10008-17	(S) XSTR SMD BC817-25 NPN SOT23
Q137		000-00030-95	(S) XSTR 2N6107 PNP TO220 AF
Q201		000-10008-48	(S) XSTR SMD BCW60 NPN SOT23 SS
R101		036-14100-00	RES M/F 0805 1K 5%
*R102		036-16220-00	RES M/F 0805 220K 5%
R103		036-15330-00	RES M/F 0805 33K 5%
R104		036-16470-00	RES M/F 0805 470K 5%
*R105		036-15150-00	RES M/F 0805 15K 5%
*R106		036-15150-00	RES M/F 0805 15K 5%
*R107		036-14390-00	RES M/F 0805 3K9 5%
*R108		036-14330-00	RES M/F 0805 3K3 5%
*R109		036-15100-00	RES M/F 0805 10K 5%
*R111		036-14820-00	RES M/F 0805 8K2 5%
*R112		036-14680-00	RES M/F 0805 6K8 5%
*R113		036-14100-00	RES M/F 0805 1K 5%
*R114		036-16100-00	RES M/F 0805 100K 5%
*R115		036-16220-00	RES M/F 0805 220K 5%
*R116		045-04470-00	RES NTC SMD 4K7 5% 20MW
R117		036-16220-00	RES M/F 0805 220K 5%
R118		036-15270-00	RES M/F 0805 27K 5%
R119		036-16470-00	RES M/F 0805 470K 5%
*R121		036-15150-00	RES M/F 0805 15K 5%
*R122		036-14390-00	RES M/F 0805 3K9 5%
R123		036-14100-00	RES M/F 0805 1K 5%
R124		036-16100-00	RES M/F 0805 100K 5%
R125		036-15100-00	RES M/F 0805 10K 5%
R126		036-14100-00	RES M/F 0805 1K 5%
R127		036-15100-00	RES M/F 0805 10K 5%
R128		036-15220-00	RES M/F 0805 22K 5%
R129		036-17100-00	RES M/F 0805 1M 5%
R130		036-14220-00	RES M/F 0805 2K2 5%
R131		036-16180-00	RES M/F 0805 180K 5%
R132		036-14100-00	RES M/F 0805 1K 5%
R133		036-15100-00	RES M/F 0805 10K 5%
R134		036-13470-00	RES M/F 0805 470E 5%
R135		036-13680-00	RES M/F 0805 680E 5%
R136		036-15100-00	RES M/F 0805 10K 5%
R137		036-13470-00	RES M/F 0805 470E 5%
R138		036-15100-00	RES M/F 0805 10K 5%
R141		036-15100-00	RES M/F 0805 10K 5%
R142		036-15100-00	RES M/F 0805 10K 5%
R143		036-15100-00	RES M/F 0805 10K 5%
R144		036-15820-00	RES M/F 0805 82K 5%
R145		036-15470-00	RES M/F 0805 47K 5%
R146		036-14180-00	RES M/F 0805 1K8 5%
R148		036-14820-00	RES M/F 0805 8K2 5%
R149		036-13470-00	RES M/F 0805 470E 5%
R150		036-12220-00	RES M/F 0805 22E 5%
R151		036-15100-00	RES M/F 0805 10K 5%
R152		036-15100-00	RES M/F 0805 10K 5%
R153		036-14680-00	RES M/F 0805 6K8 5%
R154		036-14680-00	RES M/F 0805 6K8 5%
R155		036-13220-00	RES M/F 0805 220E 5%
R156		036-13100-00	RES M/F 0805 100E 5%
R157		036-12220-00	RES M/F 0805 22E 5%
R158		036-14100-00	RES M/F 0805 1K 5%
R159		036-15100-00	RES M/F 0805 10K 5%
R160		036-14470-00	RES M/F 0805 4K7 5%
R161		036-14100-00	RES M/F 0805 1K 5%
R162		036-17100-00	RES M/F 0805 1M 5%
R163		036-13680-00	RES M/F 0805 680E 5%
R164		036-14220-00	RES M/F 0805 2K2 5%
R165		036-14100-00	RES M/F 0805 1K 5%
R166		036-13680-00	RES M/F 0805 680E 5%
R168		036-15100-10	RES M/F 0805 10K 1%
R169		036-14100-00	RES M/F 0805 1K 5%
R170		036-14100-00	RES M/F 0805 1K 5%
R171		036-14100-00	RES M/F 0805 1K 5%
R172		036-15100-10	RES M/F 0805 10K 1%
R173		036-13470-00	RES M/F 0805 470E 5%
R174		036-13220-00	RES M/F 0805 220E 5%
R175		036-16220-00	RES M/F 0805 220K 5%
R176		036-15100-00	RES M/F 0805 10K 5%
R177		036-14470-00	RES M/F 0805 4K7 5%
R178		036-16100-00	RES M/F 0805 100K 5%
R179		036-15100-00	RES M/F 0805 10K 5%
R180		036-16150-00	RES M/F 0805 150K 5%
R181		036-14560-00	RES M/F 0805 5K6 5%
R182		036-16100-00	RES M/F 0805 100K 5%
R183		036-14470-00	RES M/F 0805 4K7 5%
R184		036-14100-00	RES M/F 0805 1K 5%
R185		036-03100-02	RES 100E 1206 200V 250MW RC01
R186		036-13100-00	RES M/F 0805 100E 5%
R187		036-03150-03	RES 1218 PWR CHIP 150E 20% 1W
R188		036-13220-00	RES M/F 0805 220E 5%
R189		036-12100-00	RES M/F 0805 10E 5%
R190		036-12220-00	RES M/F 0805 22E 5%
R191		036-14100-10	RES M/F 0805 CHIP 1K 1%
R192		036-13220-10	RES 0805 220E 1%
R193		036-12100-00	RES M/F 0805 10E 5%
R194		036-03220-03	RES 1218 PWR CHIP 220E 20% 1W
R195		036-14220-00	RES M/F 0805 2K2 5%
R196		036-13100-00	RES M/F 0805 100E 5%
R197		036-10000-00	RES M/F 0805 ZERO OHM
R203		036-02100-02	RES 10E 1206 200V 250MW RC01
R205		036-02100-02	RES 10E 1206 200V 250MW RC01
*R206		036-13390-10	RES MF 0805 CHIP 390E 1%

Ref	Var	IPN	Description
R207		036-15470-10	RES M/F 0805 47K 1%
*R208		036-15470-10	RES M/F 0805 47K 1%
R209		036-14150-10	RES MF 0805 CHIP 1K5 1%
R210		036-14470-10	RES M/F 0805 CHIP 4K7 1%
*R211		036-15560-10	RES MF 0805 CHIP 56K 1%
R212		036-15100-00	RES M/F 0805 10K 5%
R213		036-14390-00	RES M/F 0805 3K9 5%
R214		036-14470-00	RES M/F 0805 4K7 5%
*R215			available as sub-assembly only - refer to (20) (045-06100-05) in the mechanical parts list
*R216		036-03100-02	RES 100E 1206 200V 250MW RC01
*R217		036-03100-02	RES 100E 1206 200V 250MW RC01
R218		036-13390-10	RES MF 0805 CHIP 390E 1%
R219			available as sub-assembly only - refer to (20) (045-06100-05) in the mechanical parts list
R220		036-15470-10	RES M/F 0805 47K 1%
R222		036-15470-10	RES M/F 0805 47K 1%
*R223		039-05050-00	RES TO22050E 50W MP850
R224		036-14150-10	RES MF 0805 CHIP 1K5 1%
R225		030-03120-00	RES FILM 120E 5% 0.25W 7X2.5
R228		036-14470-10	RES M/F 0805 CHIP 4K7 1%
R229		036-15560-10	RES MF 0805 CHIP 56K 1%
*R230		036-02100-02	RES 10E 1206 200V 250MW RC01
R231		030-03120-00	RES FILM 120E 5% 0.25W 7X2.5
*R232		036-02100-02	RES 10E 1206 200V 250MW RC01
R237		045-04470-00	RES NTC SMD 4K7 5% 20MW
RV101		042-04500-05	RES PRESET SMD 5K CER 4MM SQ
RV103		042-05500-05	RES PRESET SMD 50K CER 4MM SQ
RV105		042-04500-05	RES PRESET SMD 5K CER 4MM SQ
RV107		042-05500-05	RES PRESET SMD 50K CER 4MM SQ
RV109		044-04200-03	RES PRE 2K 10 TURN PNL MTG
RV113		042-06500-05	RES PRESET SMD 500K CER 4MM SQ
RV115		042-04220-05	RES PRESET SMD 2K CER 4MM SQ
SK101		240-10000-05	CONN SMD SKT 8W 2R M-MATCH
SK103		240-10000-05	CONN SMD SKT 8W 2R M-MATCH
*SK201		240-02100-44	SKT COAX MINI JACK PCB MT ANG.

T839 Mechanical & Miscellaneous Parts (220-01404-03)

IPN	Legend	Description
000-00030-95	15	Q137
004-00687-02/3	18	#IC201, *#IC202
012-04100-05	35	CAP F/THRU 1N SUPPR FLTR S-MTG
012-04150-01	26	CAP CER F/THRU 1N5 NO LEAD
039-05050-00	11	*R223
045-06100-05	20	ASSY 100K NTC FOR MODULE *R215, R219
051-00005-36	9	*IC203, *IC205
051-00006-02		SOLDER SPRING 1.3MM A4M1877 Support for front panel LED solder joints.
051-00642-01	32	COAX SEMI-RIG N-TYPE EXTN
065-00010-13	25	BEAD FER 7D 1.9X0.9X3.8
201-00030-02		WIRE T/C 7/0.2 PVC RED Front panel LEDs.
201-00030-10		WIRE T/C 7/0.2 PVC BLACK Front panel LEDs.
201-00050-25		AUTO 154 RED 41/0.3 PVC DC+ from D-range PCB.
201-00050-26		AUTO 154 BLACK 41/0.3 PVC DC- from D-range PCB.
206-00010-11		COAX 50 OHM RG316-U PTFE Coax from BNC connector to *SK201.
219-02591-00	22	LOOM RIBBON 8 WAY FOR PA
219-02592-00		CABLE ASSY RG223/U N TO BNC Exciter/PA connecting cable.
220-01402-02	2	PCB T838/9 TEFLON DIRNL COUPLER
220-01404-03	1	PCB T838/9 PA MODULE DESIGN
240-00010-55	24	PLUG 15 W D RANGE W/W PNL MT PL101
240-00100-43		PLG COAX MINI PIN CRIMP 1.5D Coax from BNC connector to *SK201.
240-02010-54		SKT 15W DRANGE PNL MTG 125 C Matching socket for D-range plug PL101.
240-02100-06	31	SKT COAX N TYPE PNL MTG OP-TER
240-02100-17	33	SKT COAX BNC PNL JAC CRP RG316
240-04020-62		SKT 2 W RECEP SHORTING LINK LINK1
240-06010-14		CLAMP LATCHING 15 W D RANGE Cover for D-range socket.
240-06010-15	29	BLOCK LATCHING 15W D RANGE
240-06010-44	30	HOOD CONN UHF & N-TYPE
258-00010-03	37	FAN 12V 119X119X25MM TUBE AX
302-05204-00	34	BRKT A3M2314 F/THRU MTG
303-23146-00	48	COVER SIDE T838/9 PA
308-01007-01	45	HANDLE BASE STATION SERIES II
308-13122-02	5	HEATSINK T838/9 PA COMPLETE
308-13125-00	6	HEATSINK T839 COUPLER
316-06651-00	42	PANEL PA 100W REAR DRV SER II
319-01152-00	23	SHIELD A3M2250 F/THRU MTG
319-01190-01	3	SHIELD WALL HARM. FILTER
319-01201-00	41	SHIELD LID HARM. FILTER
319-01202-00	4	SHIELD CONTROL CIRCUIT
319-30064-00	17	SPACER HSINK RF MODULE
345-00040-16	27	SCRW M3X20MM P/POZ ST BZ
349-00010-59	21	SCRW 6-32 X 3/8 P/PH T/T ZP
349-00020-07	8	SCRW 4-40 X 5/16 P/POZ T/T BLK
349-00020-08	7	SCRW T/T 4-40X3/8 CSK POZI BZ Secure *IC203/205 couplers to heatsink.
349-00020-09	13	SCRW T/T 4-40X3/8 IN P/POZ BLK
349-00020-36	47	LIM)SCREW TT M3X8m PANTORX BLK
349-00020-43	40	SCRW T/T M4X12MM P/POZ BZ
349-00020-49	38	SCRW T/T M4X35MM P/POZ BZ
352-00010-04	10	NUT M2.5 MACH HEX ST BZ
352-00010-29	46	NUT M4 NYLOC HEX
353-00010-10	12	WSHR M3 FLAT 7MMX0.6MM ST BZ
356-00010-01	36	TAG SOLDER 3MM SHORT M6132/3.2
356-00010-03	2	TAG SOLDER 3MM LONG M614/3.2
356-00010-05	19	TAG SOLDER 4MM LONG M6144/4.2
357-00010-45	39	CLAMP CABLE 4.8MM P CLIP
360-00010-41	44	BUSH SHORTY BLK
362-00010-07	14	GASKET SIL INSULATING TO-220
362-00010-13	16	BUSH INSULATING 1.1MM TOP HAT
362-00010-33	43	GROMMET LED MTG 3MM
365-00100-20		LABEL WHITE S/A 28X11MM
365-01391-01		LABEL 30X10.8 T/MARK VOID
365-01539-00		LABEL WARNING 120W/PWR CLAMP
369-00010-14		TIE CABLE NYLON 100X2.6MM
399-00010-56		BAG PLASTIC 200X250MM
400-00020-07		SLEEVING 2MM SIL RUBBER
400-00020-30		HEATSHRINK 3MM
410-00010-43		PKG T296 AMPAC REF 73-46

 Copyright TEL

replace A4 pages D5.3.7/D5.3.8 with A3 pages D5.3.7/D5.3.8

replace A4 pages D5.3.7/D5.3.8 with A3 pages D5.3.7/D5.3.8

Copyright TEL

T839 Grid Reference Index (IPN 220-01404-03)

How To Use This Grid Reference Index

The first digit in the PCB layout reference is a "1" or "2", indicating the top or bottom side layout respectively, and the last two characters give the location of the component on that diagram.

The first digit in the circuit diagram reference is the sheet number, and the last two characters give the location of the component on that sheet.

Note:

This grid reference index covers both the T838 and T839 and is reproduced in both PCB Information sections for your convenience.

Device	PCB	Circuit
*C101	1:E4	1-B8
*C103	1:E4	1-B9
*C105	1:B3	1-D8
*C107	1:B3	1-D9
*C109	1:B3	1-D8
*C111	1:C4	1-D8
*C113	1:B5	1-F8
*C115	1:B5	1-F8
*C117	1:B5	1-F9
*C119	1:B5	1-G8
*C121	1:D4	1-B6
*C123	1:D4	1-B6
*C124	1:E3	1-C6
*C125	1:C4	1-D7
*C127	1:C4	1-D6
C129	1:B3	1-H5
C131	1:B3	1-J6
C132	1:A3	1-K7
C133	1:B4	1-K8
C137	1:B2	1-K8
C138	1:B2	1-L8
C139	1:B4	1-M6
C141	1:B3	1-M8
C143	1:E3	1-E7
C145	1:E3	1-F7
C147	1:D3	1-F6
C149	1:D3	1-F7
C151	1:C5	1-D5
C153	1:B5	1-D3
C155	1:D3	1-G3
C159	1:B3	1-H2
C161	1:B4	1-K4
C162	1:B3	1-L4
C164	1:B3	1-L4
C165	1:B3	1-M4
C167	1:K3	1-P3
C169	1:K3	1-P3
C171	1:K3	1-Q3
C173	1:D4	1-B0
C174	1:E4	1-B0
C176	1:D4	1-E0
C178	1:C4	1-F0
C179	1:D3	1-G2
C180	1:E2	1-H0
C181	1:D3	1-G0
C182	1:D3	1-H1
C184	1:D4	1-G0
C185	1:D2	1-J1
C186	1:E2	1-J0
C187	1:D3	1-K1
C188	1:C2	1-L1
C189	1:C3	1-M1
C190	1:C3	1-N1
C192	1:B2	1-N1
C193	1:B2	1-P1
C195	1:C2	1-Q1
C201	1:J7	2-L5
*C202	1:H3	2-B8
*C203	1:P7	2-C1
*C204	1:M6	2-E1
C205	1:L7	2-I5
*C206	1:P6	2-C1
C207	1:K7	2-K5
*C208	1:H3	2-C8
*C209	1:C5	2-D8
*C210	1:C5	2-E8
*C212	1:D5	2-G9
*C213	1:D4	2-H9
C215	1:D5	2-J8
C216	1:H6	2-B6
*C217	1:P3	2-E3
C218	1:H5	2-C6
*C219	1:P2	2-E3
C220	1:E5	2-D6
C221	1:E5	2-N8
C222	1:E5	2-E6
C223	1:D5	2-G7
C224	1:D5	2-M8
C225	1:L6	2-I4
C226	1:D4	2-H7
C227	1:K6	2-J4
C229	1:H6	2-K4
*C230	1:L4	2-I2
*C231	1:L4	2-I1
*C232	1:K4	2-J1
*C233	1:K4	2-K2
*C234	1:J4	2-L1
*C240	1:H4	2-K1
C259	1:F7	2-Q3
C261	1:F6	2-Q4
C268	1:E6	2-S2
C270	1:D6	2-T2
C271	1:C6	2-T2
C272	1:B6	2-U2
C273	1:B6	2-V2
C294	1:D6	2-R1
C295	1:D6	2-R1
C297	1:C5	2-L8
C298	1:C6	2-L8
D101	1:B3	1-H5
D101	1:B3	1-G5
D103	1:P7	1-K9
D105	1:C2	1-J2
D105	1:C2	1-J2
D107	1:P7	1-K5
D109	1:P6	1-L5
D111	1:C2	1-M1
D111	1:C2	1-M1
D113	1:F7	1-Q2
D201	1:F6	2-Q3
D202	1:D4	2-I8
D202	1:D4	2-I8
D203	1:E6	2-R2
IC101	1:D4	1-C6
IC101	1:D4	1-G0
IC101	1:D4	1-B8
IC101	1:D4	1-C0
IC101	1:D4	1-N0
IC103	1:C4	1-D4
IC103	1:C4	1-J8
IC103	1:C4	1-F0
IC103	1:C4	1-J5
IC103	1:C4	1-E3
IC105	1:D3	1-M0
IC105	1:D3	1-P0
IC105	1:D3	1-G2
IC107	1:D3	1-K1
IC109	1:B2	1-N1
#IC201	1:K7	2-I4
*#IC202	1:K4	2-I1
*IC203	1:N5	2-F2
IC204	1:D5	2-H7
IC204	1:D5	2-H8
IC204	1:D5	2-N8
*IC205	1:G5	2-P2
L101	1:K3	1-P3
L103	1:K2	1-Q3
L105	1:E2	1-K0
*L201	1:P7	2-C1
*L202	1:H3	2-B8
L203	1:L7	2-I6
*L204	1:C5	2-D8
L206	1:H5	2-B7
L208	1:E5	2-D7
*L211	1:P2	2-D3
L215	1:L7	2-I5
L217	1:J7	2-K5
*L223	1:J4	2-K2
*L230	1:L4	2-I3
*L231	1:L4	2-I2
L233	1:F6	2-Q3
*L236	1:H6	2-M2
L239	1:E5	2-R2
L241	1:D6	2-S3
L243	1:C6	2-T3
L245	1:C7	2-T2
L247	1:C6	2-U3
L248	1:D7	2-U2
L249	1:B6	2-V3
L264	1:C6	2-L8
LINK1	1:D3	1-L0
LINK2	1:P6	1-D1
LINK201	1:D5	2-F8
P101	1:A5	1-R9
P103	1:K3	1-R0
P105	1:K2	1-R0
P201	1:B6	2-V3
PL101	1:L3	1-C2
*Q101	1:C3	1-C9
*Q103	1:B3	1-E8
*Q105	1:C4	1-D7
*Q107	1:B5	1-F8
*Q109	1:A5	1-G9
Q111	1:A3	1-J7
Q113	1:A3	1-K6
Q115	1:A3	1-L7
Q117	1:B4	1-K8
Q119	1:B4	1-L6
Q121	1:B3	1-L8
Q123	1:E3	1-E7
Q125	1:E3	1-F7
Q127	1:D3	1-G7
Q129	1:B4	1-L4
Q131	1:B3	1-M5
Q133	1:D4	1-D0
Q135	1:E2	1-H0
Q136	1:E3	1-H0
Q137	1:D2	1-J0
Q201	1:D5	2-K8
R101	1:E4	1-A8
*R102	1:E4	1-A9
R103	1:E4	1-A8
R104	1:E4	1-B9
*R105	1:D4	1-C8
*R106	1:B3	1-C8
*R107	1:C4	1-D7
*R108	1:B3	1-E9
*R109	1:C3	1-E9
*R111	1:B5	1-E8
*R112	1:B5	1-E9
*R113	1:B5	1-F9
*R114	1:C4	1-A6
*R115	1:C5	1-A6
*R116	1:D4	1-A7
R117	1:C4	1-A6
R118	1:D4	1-B6
R119	1:D4	1-C7
*R120	1:E3	1-H7
*R121	1:C4	1-C7
*R122	1:C4	1-D6
R123	1:B4	1-H7
R124	1:B4	1-H8
R125	1:B4	1-H8
R126	1:B3	1-H6
R127	1:A3	1-H7
R128	1:A3	1-J7
R129	1:B4	1-J9
R130	1:B4	1-J8
R131	1:A3	1-J7
R132	1:B5	1-J8
R133	1:A3	1-K7
R134	1:B3	1-K6
R135	1:P7	1-K9
R136	1:A3	1-K7
R137	1:B3	1-K6
R138	1:B4	1-L6

Copyright TEL

Device	PCB	Circuit
R141	1:E3	1-C6
R142	1:E3	1-E7
R143	1:E4	1-F6
R144	1:D3	1-F6
R145	1:E4	1-F7
R146	1:E4	1-G7
R148	1:C5	1-D5
R149	1:C5	1-C4
R150	1:C4	1-F0
R151	1:B5	1-D5
R152	1:B5	1-C3
R153	1:C5	1-F4
R154	1:C5	1-F3
R155	1:D3	1-F2
R156	1:D3	1-F3
R157	1:D4	1-G0
R158	1:C4	1-H3
R159	1:C4	1-H4
R160	1:C3	1-J5
R161	1:B3	1-J3
R162	1:B3	1-K4
R163	1:P8	1-K5
R164	1:B3	1-K4
R165	1:B4	1-K4
R166	1:P7	1-L5
R168	1:E4	1-A1
R169	1:E4	1-A0
R170	1:D4	1-B0
R171	1:E4	1-B0
R172	1:E4	1-B0
R173	1:P6	1-C1
R174	1:P6	1-C1
R175	1:D4	1-C0
R176	1:D4	1-D0
R177	1:D4	1-D0
R178	1:D3	1-E1
R179	1:D4	1-E0
R180	1:D4	1-E0
R181	1:E3	1-F2
R182	1:D4	1-E0
R183	1:D4	1-F1
R184	1:E3	1-G1
R185	1:E2	1-J0
R186	1:D2	1-H1
R187	1:E2	1-H0
R188	1:D2	1-L1
R189	1:D2	1-L1
R190	1:C3	1-M1
R191	1:B2	1-P1
R192	1:B2	1-P1
R193	1:C2	1-Q1
R194	1:D2	1-H0
R195	1:D3	1-J0
R196	1:D3	1-J0
R197	1:D3	1-L1
*R201	1:N6	2-D1
*R202	1:N6	2-D1
R203	1:L7	2-I5
*R204	1:N6	2-D1
R205	1:K7	2-K4
*R206	1:C5	2-E8
R207	1:D4	2-F8
*R208	1:C5	2-G9
R209	1:D5	2-G8
R210	1:D5	2-G8
*R211	1:D4	2-H9
R212	1:D4	2-I8
R213	1:D5	2-E7
R214	1:E4	2-J8
*R215	1:H3	2-B8
*R216	1:P6	2-E2
*R217	1:P6	2-E2
R218	1:E5	2-E7
R219	1:H6	2-B6
R220	1:E5	2-F7
R222	1:D5	2-G7

Device	PCB	Circuit
*R223	1:F2	2-P2
R224	1:D4	2-G7
R225	1:E6	2-R3
R228	1:E4	2-G7
R229	1:D4	2-H7
*R230	1:L4	2-I2
R231	1:F5	2-Q2
*R232	1:K4	2-K1
R237	1:C5	2-K8
RV101	1:C4	1-H8
RV103	1:C4	1-H6
RV105	1:C3	1-J5
RV107	1:C3	1-J3
RV109	1:P5	1-C2
*RV111	1:P5	1-D1
RV113	1:C3	1-D0
RV115	1:C3	1-K0
SK101	1:K3	1-A2
SK103	1:B4	1-B2
*SK201	1:N3	2-D3
*SK203	1:N7	2-C1

Device	PCB	Circuit

Device	PCB	Circuit

Copyright TEL

Part E T830 VCO PCB Information

This part of the manual provides the parts list, grid reference index, PCB layouts and circuit diagram for the T830 VCO PCB. There is a detailed table of contents at the start of Section 2.

Section	Title	IPN	Page
1	Introduction		1.1
2	T830 VCO PCB	220-01176-03	2.1

Copyright TEL

1 Introduction

PCB Identification

All PCBs are identified by a unique 10 digit “internal part number” (IPN), e.g. 220-12345-00, which is screen printed onto the PCB (usually on the top side), as shown in the example below:

The last 2 digits of this number define the issue status, which starts at 00 and increments through 01, 02, 03, etc. as the PCB is updated. Some issue PCBs never reach full production status and are therefore not included in this manual. A letter following the 10 digit IPN has no relevance in identifying the PCB for service purposes.

Note: It is important that you identify which issue PCB you are working on so that you can refer to the appropriate set of PCB information.

Parts Lists

The 10 digit numbers (000-00000-00) in this Parts List are “internal part numbers” (IPNs). We can process your spare parts orders more efficiently and accurately if you quote the IPN and provide a brief description of the part.

The components listed in this parts list are divided into two main types: those with a circuit reference (e.g. C2, D1, R121, etc.) and those without (miscellaneous and mechanical).

Those with a circuit reference are grouped in alphabetical order and then in numerical order within each group. Each component entry comprises three or four columns, as shown below:

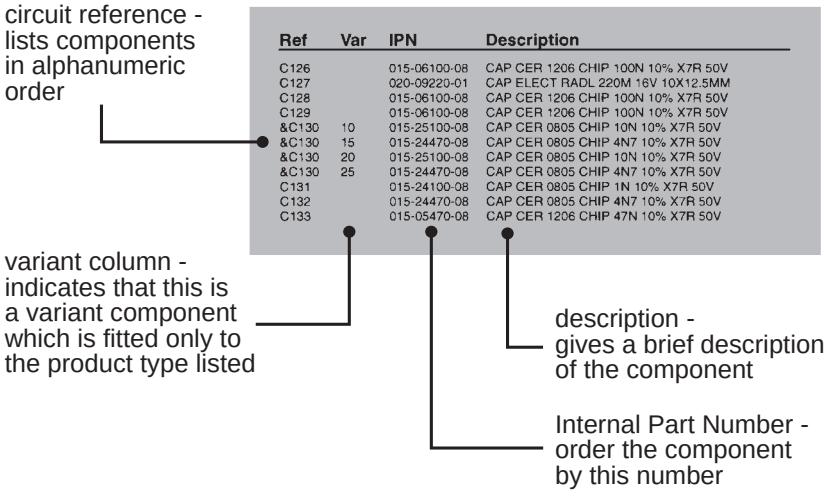

Ref	Var	IPN	Description
C126		015-06100-08	CAP CER 1206 CHIP 100N 10% X7R 50V
C127		020-09220-01	CAP ELECT RADL 220M 16V 10X12.5MM
C128		015-06100-08	CAP CER 1206 CHIP 100N 10% X7R 50V
C129		015-06100-08	CAP CER 1206 CHIP 100N 10% X7R 50V
&C130	10	015-25100-08	CAP CER 0805 CHIP 10N 10% X7R 50V
&C130	15	015-24470-08	CAP CER 0805 CHIP 4N7 10% X7R 50V
&C130	20	015-25100-08	CAP CER 0805 CHIP 10N 10% X7R 50V
&C130	25	015-24470-08	CAP CER 0805 CHIP 4N7 10% X7R 50V
C131		015-24100-08	CAP CER 0805 CHIP 1N 10% X7R 50V
C132		015-24470-08	CAP CER 0805 CHIP 4N7 10% X7R 50V
C133		015-05470-08	CAP CER 1206 CHIP 47N 10% X7R 50V

The mechanical and miscellaneous section lists the variant and common parts in IPN order.

Parts List Amendments

At the front of the parts list is the Parts List Amendments box (an example of which is shown below). This box contains a list of component changes which took place after the parts list and diagrams in this section were compiled. These changes (e.g. value changes, added/deleted components, etc.) are listed by circuit reference in alphanumeric order and supersede the information given in the parts list or diagrams. Components without circuit references are listed in IPN order. The number in brackets at the end of each entry refers to the Tait internal Change Order document.

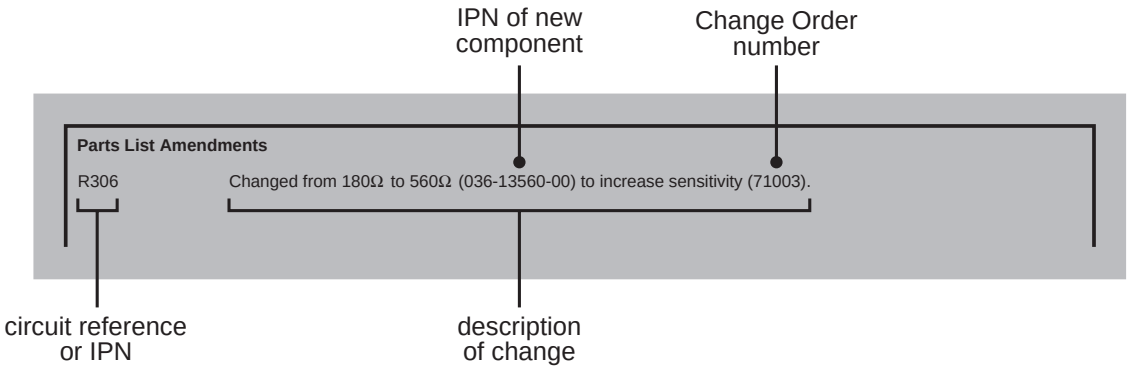

Variant Components

A variant component is one that has the same circuit reference but different value or specification in different product types. Where two products share the same PCB, the term "variant" is also used to describe components unplaced in one product. Variant components have a character prefix, such as "&", "=" or "#", before the circuit reference (e.g. &R100).

The table below explains the variant prefixes used in T800 Series II products:

If the variant prefix is. . .	the component will. . .
&	change according to channel spacing
=	change according to frequency stability
#	change according to frequency band
%	be placed or unplaced for special applications
*	be unplaced in one product (where two products share the same PCB)

 Copyright TEL

Grid Reference Index

This section contains a component grid reference index to help you find components and labelled pads on the PCB layouts and circuit diagrams. This index lists the components and pads in alphanumeric order, along with the appropriate alphanumeric grid references, as shown below:

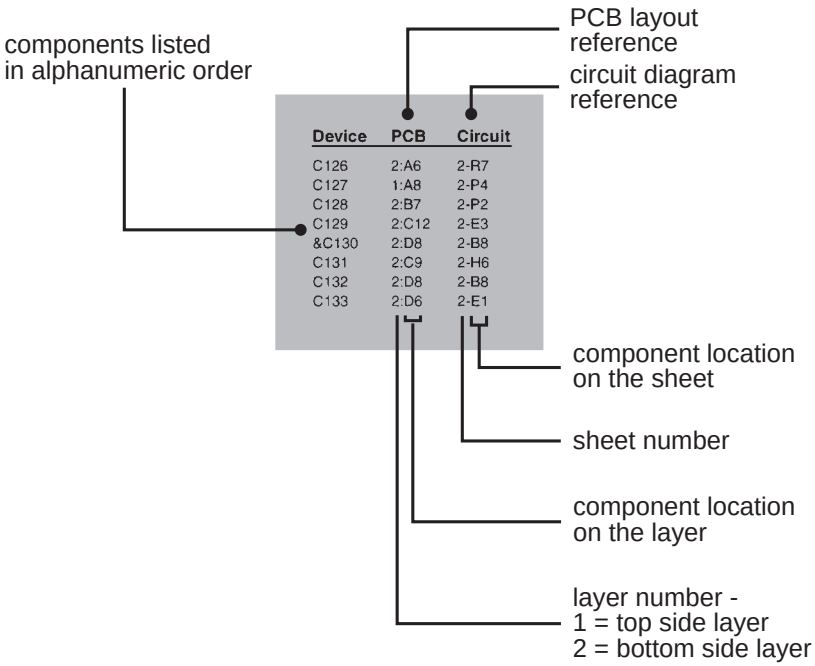

Copyright TEL

2 T830 VCO PCB

This section contains the following information.

IPN	Section	Page
220-01176-03	Parts List	2.3
	Mechanical & Miscellaneous Parts	2.5
	Grid Reference Index	2.6
	PCB Layout - Bottom Side	2.7
	PCB Layout - Top Side	2.8
	Circuit Diagram	2.9

Copyright TEL

T830 VCO Parts List (IPN 220-01176-03)

How To Use This Parts List

The components listed in this parts list are divided into two main types: those with a circuit reference (e.g. C2, D1, R121, etc.) and those without (miscellaneous and mechanical).

Those with a circuit reference are grouped in alphabetical order and then in numerical order within each group. Each component entry comprises three or four columns: the circuit reference, variant (if applicable), IPN and description. A letter in the variant column indicates that this is a variant component which is fitted only to the product type listed. Static sensitive devices are indicated by an (S) at the start of the description column.

The mechanical and miscellaneous section lists the variant and common parts in IPN order.

The Parts List Amendments box below lists component changes that took place after the parts list and diagrams in this section were compiled. These changes (e.g. value changes, added/deleted components, etc.) are listed by circuit reference in alphanumeric order and supersede the information given in the parts list or diagrams. Components without circuit references are listed in IPN order.

Parts List Amendments

#C6	Rx low (D):	changed from 22p (015-22220-01) to 18p (015-22180-01) to improve loop voltage (710900).
	Tx High (A):	incorrectly listed as 22p (015-22220-01) - correct value is 18p (015-22180-01).
	Tx High (A):	changed from 18p (015-22180-01) to 15p (015-22150-01) to improve the loop voltage tuning range at the top of the band (710943/44).

Variant Code	Description	T835 (MHz)	T836/837 (MHz)
A	Tx high	-	148 - 174
B	Tx low	-	136 - 156
C	Rx high	169.4 - 195.4	
D	Rx low	157.4 - 177.4	-

Ref	Var	IPN	Description
C2		015-23680-08	CAP CER 0805 680P 10% X7R 50V
#C3	A	015-22180-01	CAP CER 0805 18P 5% NPO 50V
#C3	B	015-22180-01	CAP CER 0805 18P 5% NPO 50V
#C3	C	015-22100-01	CAP CER 0805 10P+-1/2P NPO 50V
#C3	D	015-22100-01	CAP CER 0805 10P+-1/2P NPO 50V
#C4	A	015-22220-01	CAP CER 0805 22P 5% NPO 50V
#C4	B	015-22220-01	CAP CER 0805 22P 5% NPO 50V
#C4	C	015-22180-01	CAP CER 0805 18P 5% NPO 50V
#C4	D	015-22150-01	CAP CER 0805 15P 5% NPO 50V
#C5	A	015-22220-01	CAP CER 0805 22P 5% NPO 50V
#C5	B	015-22220-01	CAP CER 0805 22P 5% NPO 50V
#C5	C	015-22220-01	CAP CER 0805 22P 5% NPO 50V
#C5	D	015-22180-01	CAP CER 0805 18P 5% NPO 50V
#C6	A	015-22220-01	CAP CER 0805 22P 5% NPO 50V
#C6	B	015-22180-01	CAP CER 0805 18P 5% NPO 50V
#C6	C	015-22150-01	CAP CER 0805 15P 5% NPO 50V
#C6	D	015-22220-01	CAP CER 0805 22P 5% NPO 50V
#C7	A	015-22270-01	CAP CER 0805 27P 5% NPO 50V
#C7	B	015-22330-01	CAP CER 0805 33P 5% NPO 50V
#C7	C	015-22270-01	CAP CER 0805 27P 5% NPO 50V
#C7	D	015-22330-01	CAP CER 0805 33P 5% NPO 50V
C8		015-23120-01	CAP CER 0805 120P 5% NPO 50V
C9		015-23680-08	CAP CER 0805 680P 10% X7R 50V
C10		015-21220-01	CAP CER 0805 2P2+-1/4P NPO 50V
C11		015-23680-08	CAP CER 0805 680P 10% X7R 50V
C12		015-23680-08	CAP CER 0805 680P 10% X7R 50V
C13		025-08100-02	CAP TANT BEAD 10M 10% 16V
C14		015-23680-08	CAP CER 0805 680P 10% X7R 50V
C15		015-23680-08	CAP CER 0805 680P 10% X7R 50V
C16		015-22560-01	CAP CER 0805 56P 5% NPO 50V
C17		015-22560-01	CAP CER 0805 56P 5% NPO 50V
C18		015-23680-08	CAP CER 0805 680P 10% X7R 50V
C19		015-05470-08	CAP CER 1206 47N 10% X7R 50V
C20		015-23680-08	CAP CER 0805 680P 10% X7R 50V
C21		015-23680-08	CAP CER 0805 680P 10% X7R 50V
C22		015-23680-08	CAP CER 0805 680P 10% X7R 50V
C23		015-21820-01	CAP CER 0805 8P2+-1/4P NPO 50V
C24		015-21680-01	CAP CER 0805 6P8+-1/4P NPO 50V
C25		015-23680-08	CAP CER 0805 680P 10% X7R 50V
#C26	A	036-10000-00	RES M/F 0805 ZERO OHM
#C26	B	036-10000-00	RES M/F 0805 ZERO OHM
#C26	C	036-10000-00	RES M/F 0805 ZERO OHM
#C26	D	036-10000-00	RES M/F 0805 ZERO OHM
CV1		028-02111-00	16PF TRM CAP PISTON PREC.
D1		001-00012-63	S) DIODE VARICAP BB809
D2		001-00012-63	S) DIODE VARICAP BB809
D3		001-00012-63	S) DIODE VARICAP BB809
D4		001-00012-63	S) DIODE VARICAP BB809
L1		056-00021-56	IND FXD 3.3UH AX 10X4.2 PHEN
L2		056-00021-60	IND FXD 330NH AX N/MAG 6.6*2.7
#L3	A	055-01004-00	COIL TROID 103NH 22P 9T T830TX
#L3	B	055-01000-00	COIL TOROID 110NH 22P 10T T830
#L3	C	055-01003-00	COIL TROID 91NH 22P 8T T830RX
#L3	D	055-01004-00	COIL TROID 103NH 22P 9T T830TX
L4		056-00021-52	IND FXD 820NH 10% NON MAGNETIC
L5		056-00021-56	IND FXD 3.3UH AX 10X4.2 PHEN
L6		052-08135-35	COIL A/W 3.5T/3.5MM HOR 0.8MM
L7		056-00021-56	IND FXD 3.3UH AX 10X4.2 PHEN
L8		052-08130-45	COIL A/W 4.5T/3.0MM HOR 0.8MM
Q1		000-10003-10	S) XSTR SMD BFJ310 JFET UHF
Q2		000-10057-10	S) XSTR SMD BR571 NPN SOT23
Q3		000-10057-10	S) XSTR SMD BR571 NPN SOT23
Q4		000-10008-57	S) XSTR SMD BCW70 PNP SOT23 SS
Q5		000-00032-47	S) XSTR MRF559 NPN XPACK 0.5W
R1		036-12220-00	RES M/F 0805 22E 5%
R3		036-11470-00	RES M/F 0805 4E7 10%
#R5	A	036-13390-00	RES M/F 0805 390E 5%
#R5	B	036-13390-00	RES M/F 0805 390E 5%
#R5	C	036-13330-00	RES M/F 0805 330E 5%
#R5	D	036-13390-00	RES M/F 0805 390E 5%
R6		036-12560-00	RES M/F 0805 56E 5%
R7		036-14100-00	RES M/F 0805 1K 5%
R8		036-12560-00	RES M/F 0805 56E 5%
R9		036-14100-00	RES M/F 0805 1K 5%
R10		036-12100-00	RES M/F 0805 10E 5%
R11		036-14270-00	RES M/F 0805 2K7 5%
R12		036-13180-00	RES M/F 0805 180E 5%
R13		036-12220-00	RES M/F 0805 22E 5%
R14		036-12560-00	RES M/F 0805 56E 5%
R15		036-12220-00	RES M/F 0805 22E 5%
R16		036-13270-00	RES M/F 0805 270E 5%
R17		036-13270-00	RES M/F 0805 270E 5%
R18		036-12180-00	RES M/F 0805 18E 5%
R19		036-14100-00	RES M/F 0805 1K 5%
R20		036-14680-00	RES M/F 0805 6K8 5%
R21		036-14100-00	RES M/F 0805 1K 5%
R22		036-14220-00	RES M/F 0805 2K2 5%
R23		036-12180-00	RES M/F 0805 18E 5%
R24		036-12220-00	RES M/F 0805 22E 5%
R25		036-13220-00	RES M/F 0805 220E 5%

Copyright TEL

T830 VCO Mechanical & Miscellaneous Parts (220-01176-03)

IPN	Legend	Description
220-01176-03		PCB T83X VCO
240-00025-36		PLUG 32WAY 1ROW PC MTG HARWIN
345-00040-10		SCRW M3X6MM P/POZ ST BZ
345-00060-08		SCRW M5 X 16 CH SLOT PLASTIC
350-00016-42		SPACER 5MM HI 8MM ST 2.5MM HO
352-00010-14		NUT M5 HEX PLASTIC T800 TOROID
353-00010-10		WSHR M3 FLAT 7MMX0.6MM ST BZ
353-00010-13		WSHR M3 S/PROOF INT BZ
353-00010-41		WSHR M6 NYLON BULTE LOCK

T830 VCO Grid Reference Index (IPN 220-01176-03)

How To Use This Grid Reference Index

The first digit in the PCB layout reference is a "1" or "2", indicating the top or bottom side layout respectively, and the last two characters give the location of the component on that diagram.

The first digit in the circuit diagram reference is the sheet number, and the last two characters give the location of the component on that sheet.

Device	PCB	Circuit
C2	1:B7	1-B3
#C3	1:C6	1-D4
#C4	1:C6	1-D4
#C5	1:D6	1-D3
#C6	1:C5	1-E4
#C7	1:D5	1-E3
C8	1:D6	1-F3
C9	1:D4	1-H3
C10	1:C4	1-F3
C11	1:C4	1-G4
C12	1:D8	1-F6
C13	1:D7	1-G6
C14	1:C3	1-G5
C15	1:C4	1-H5
C16	1:B3	1-J5
C17	1:B3	1-J4
C18	1:B2	1-J5
C19	1:D1	1-J6
C20	1:D3	1-J7
C21	1:E3	1-K6
C22	1:C3	1-K5
C23	1:C2	1-K4
C24	1:C2	1-L4
C25	1:C2	1-L5
#C26	1:C5	1-D4
C40	1:D5	1-D3
CV1	1:C5	1-D3
D1	1:C7	1-B4
D2	1:C7	1-C4
D3	1:D7	1-B3
D4	1:D7	1-C3
L1	1:C8	1-B3
L2	1:B7	1-C3
#L3	1:B6	1-D4
L4	1:D6	1-E3
L5	1:D7	1-F6
L6	1:A4	1-J4
L7	1:D2	1-K6
L8	1:C2	1-L5
PL-2	2:B4	2-F3
PL-3	2:C3	2-G3
PL-4	2:C8	2-F4
PL-5	2:C1	2-G4
Q1	1:C6	1-F3
Q2	1:D4	1-G3
Q3	1:C4	1-G4
Q4	1:D2	1-K7
Q5	1:B3	1-K5
R1	1:B8	1-B3
R3	1:C7	1-C4
#R5	1:D6	1-F3
R6	1:D4	1-G3
R7	1:D3	1-G3

Device	PCB	Circuit
R8	1:D4	1-G3
R9	1:D3	1-G4
R10	1:C4	1-G4
R11	1:C3	1-G5
R12	1:C4	1-G5
R13	1:B3	1-G6
R14	1:C7	1-F5
R15	1:D8	1-G6
R16	1:B4	1-H4
R17	1:A4	1-H4
R18	1:B4	1-H5
R19	1:B4	1-H6
R20	1:E2	1-J6
R21	1:B2	1-K6
R22	1:D2	1-J7
R23	1:D2	1-K7
R24	1:B2	1-K5
R25	1:C3	1-K5

Device	PCB	Circuit

Device	PCB	Circuit

 Copyright TEL

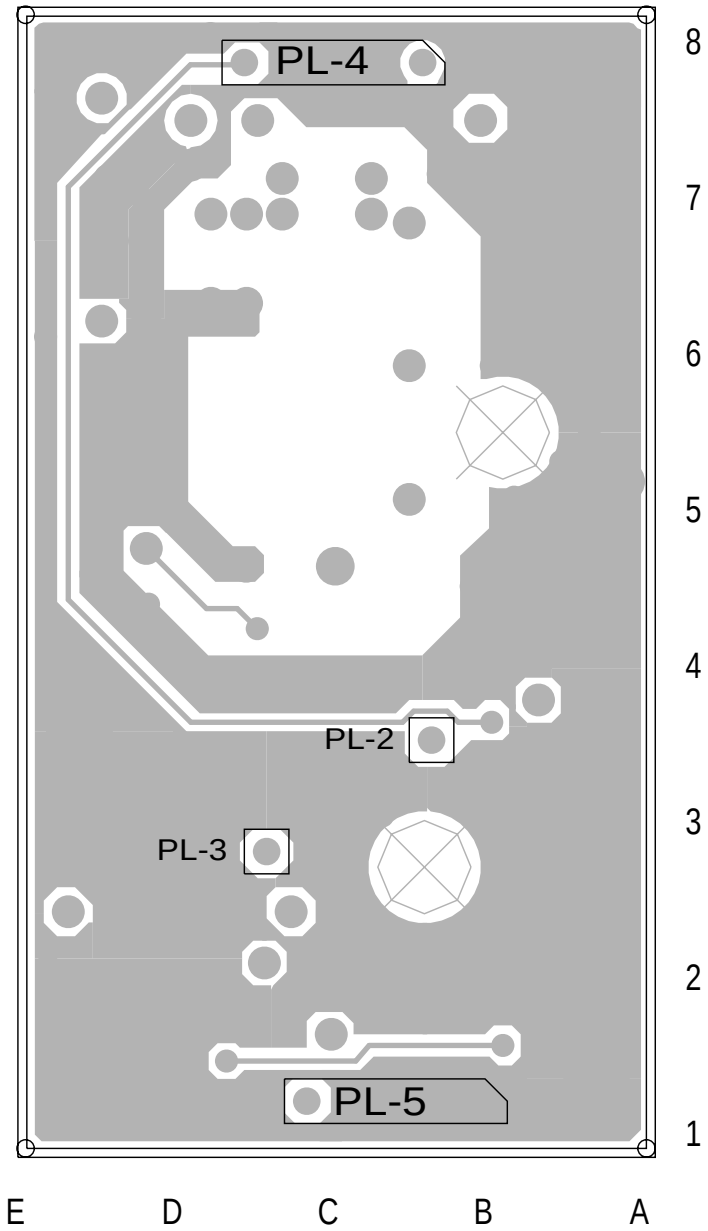

T830 VCO PCB (IPN 220-01176-03) - Bottom Side

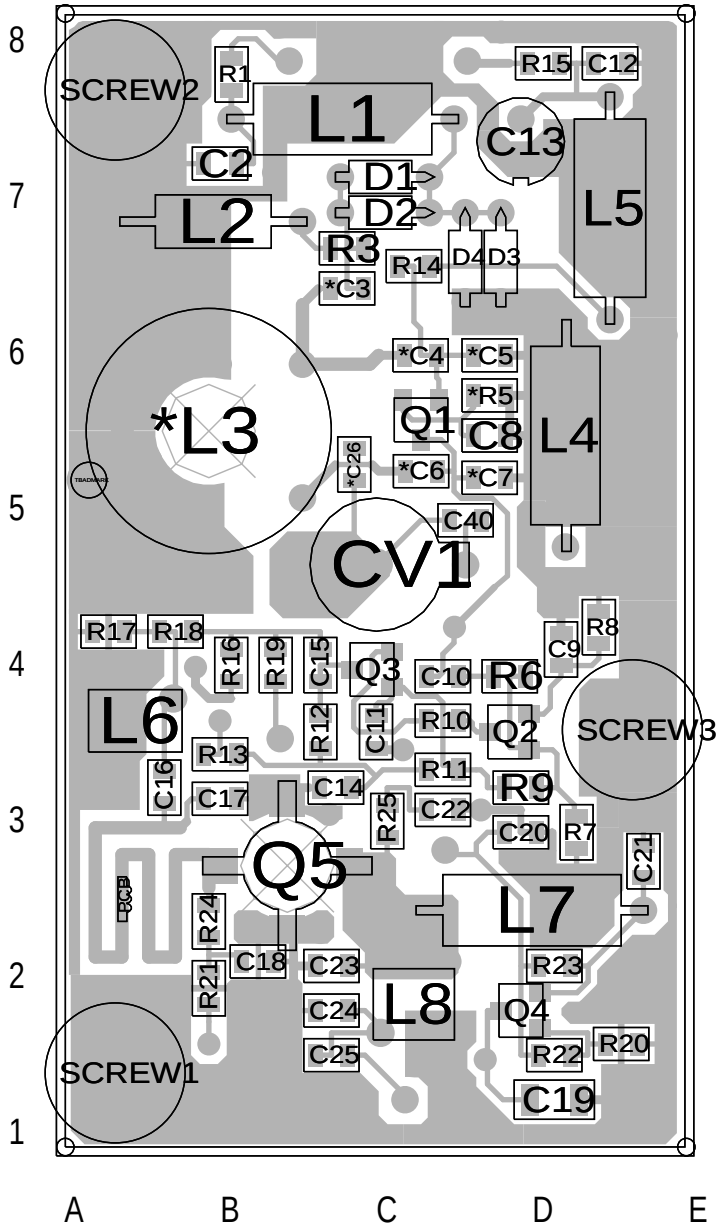

T830 VCO PCB (IPN 220-01176-03) - Top Side

 Copyright TEL

Part F Installation

This part of the manual is divided into the sections listed below. These sections give a brief description of the basic rack mounting and wiring procedures for the T835 receiver, T836 transmitter, T837 exciter and T838/839 power amplifiers.

Section	Title	Page
1	**T835 Installation**	**1.1**
1.1	Rack Mounting	1.1
1.2	Rack Wiring	1.1
1.3	Power Supply	1.2
1.4	Reverse Polarity & Overvoltage Protection	1.2
2	**T836/837 Installation**	**2.1**
2.1	Rack Mounting	2.1
2.2	Rack Wiring	2.1
2.3	Power Supply	2.2
2.4	Reverse Polarity & Overvoltage Protection	2.2
3	**T838/839 Installation**	**3.1**
3.1	Rack Mounting	3.1
3.2	Rack Wiring	3.1
3.3	Power Supply	3.2
3.4	Reverse Polarity & Overvoltage Protection	3.2
4	**N-Type Connector Assembly**	**4.1**

Figure	Title	Page
1.1	T800-41-0002 Double Guide Kit	1.1
1.2	T835 Chassis Connectors	1.1
1.3	T835 D-Range 1 Wiring - Rear View	1.1
1.4	T835 D-Range 2 Wiring - Rear View (T800-03-0000 Kit)	1.1
2.1	T800-41-0002 Double Guide Kit	2.1
2.2	T836/837 Chassis Connectors	2.1
2.3	T836/837 D-Range 1 Wiring - Rear View	2.1
2.4	T836/837 D-Range 2 Wiring - Rear View (T800-03-0000 Kit)	2.1

Figure	Title	Page
3.1	T800-45-0001 PA Guide Kit	3.1
3.2	T838/839 Chassis Connectors	3.1
3.3	T838/839 PA In Latched Position	3.1
3.4	T838/839 D-Range Wiring - Rear View	3.1
4.1	N-Type Plug Assembly Details	4.1

Copyright TEL

4 N-Type Connector Assembly

Make sure that any N-type plugs connected to Tait equipment are assembled according to the manufacturer's instructions. It is particularly important that the centre pin in the plug is positioned correctly:

- if the pin is positioned too far back in the plug, it may not make good contact with the socket;
- if the pin protrudes too far (as shown in Figure 4.1), or is not straight, it may damage the socket when the plug is screwed in.

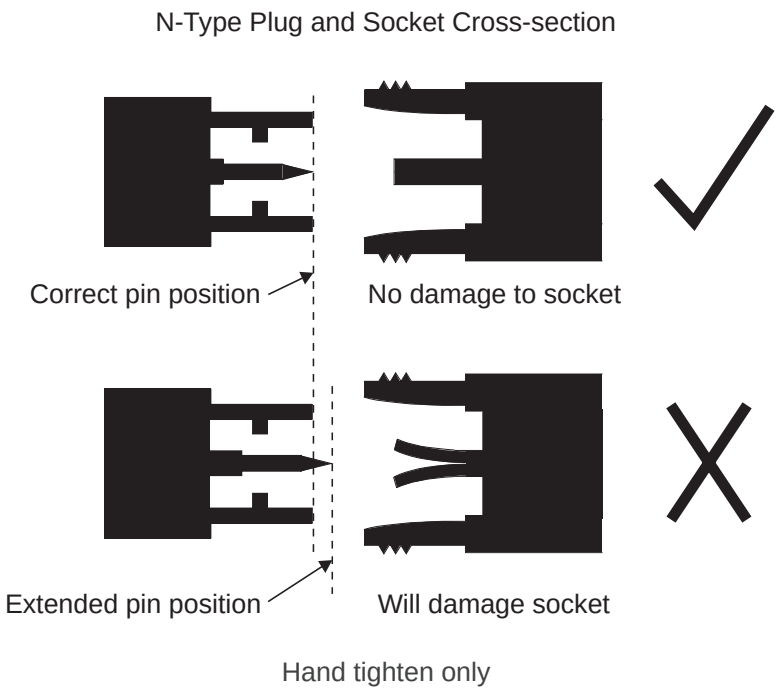

Figure 4.1 N-Type Plug Assembly Details

Copyright TEL

Part G System Configurations

This part of the manual is divided into the sections listed below. These sections provide some brief information on basic system types and how to configure T830 Series II equipment for use in them.

Section	Title	Page
1	**T835 Link Selectable Features**	**1.1**
1.1	Flat Or De-emphasised Response	1.1
1.2	Mute Relay Control	1.1
1.3	Mute Selection	1.1
1.4	Receiver Disable	1.1
1.5	CTCSS Configuration	1.1
1.6	300Hz High Pass Filter	1.2
1.7	Audio Processor Links	1.2
1.7.1	General	1.2
1.7.2	Audio Processor Linking Details For CTCSS	1.3
2	**T836/837 Optional Features**	**2.1**
2.1	Audio Processor	2.1
2.1.1	Link Details	2.1
2.1.2	Typical Options	2.2
2.2	Line Transformer Inputs And Outputs	2.2
2.3	Opto Key	2.2
2.4	Relay Driver	2.2
2.5	Local Microphone	2.3
2.6	Keying With Option PCBs	2.3
3	**Talk Through Repeater**	**3.1**
4	**Line Controlled Base Without Talk Through**	**4.1**
4.1	General	4.1
4.2	Transmitter Tail Timer	4.2
5	**DC Line Keying**	**5.1**

Figure	Title	Page
3.1	Talk Through Repeater	3.1
4.1	Basic Configuration	4.1
4.2	Remote Line Controlled Base Station	4.1
4.3	4-Wire to 2-Wire Convertor	4.2
4.4	Receiver Disable Time vs Tail Time	4.2
5.1	DC Loop Keying With Common Earth	5.1
5.2	Isolated Constant Current Loop Current Detector	5.1
5.3	Isolated Loop Current Switch	5.2
5.4	Typical System	5.2

 Copyright TEL

1 T835 Link Selectable Features

1.1 Flat Or De-emphasised Response

The links of PL210 and PL220 may be set to give either a flat or de-emphasised audio frequency response (refer to Section 1.7 for further details).

1.2 Mute Relay Control

A relay with undedicated contacts (RL210) is available in the audio processor circuit block for various switching applications. A link (PL270) is available for control of the relay from the mute circuit (refer to Section 1.7). This makes the relay suitable for controlling the keying of a transmitter in repeater applications.

1.3 Mute Selection

Link PL250 may be set to operate with noise mute or carrier mute (refer to Section 1.7).

1.4 Receiver Disable

The receiver audio can be disabled by pulling the RX-DISABLE line low. When the circuit is pulled from low to high, the receiver audio cannot be re-enabled until the disable timer completes its operation. This time is variable from 15ms to 200ms by adjusting RV220 in the audio processor section.

If required, the operation of this circuit can be disabled by changing the link of PL260 from 1-2 to 2-3.

Typical applications of the receiver disable are as an extra mute for signalling purposes, or when the T835 is configured as a line controlled base station (refer to Section 4).

1.5 CTCSS Configuration

Links PL230 & PL240 select various CTCSS options (refer to Section 1.7.2).

1.6 300Hz High Pass Filter

Link PL240 also allows the insertion of this filter to improve hum and noise performance.

1.7 Audio Processor Links

The tables in this section are the same as those in Section 3.5 in Part B. They have been repeated here for ease of reference.

1.7.1 General

Use the following table to set up the audio processor to the configuration you require. You should set the audio processor links before carrying out the receiver alignment. The factory settings are shown in brackets [ ].

Plug	Link	Function
PL210	[1 - 2] 2 - 3	de-emphasised response flat response
PL220	1 - 2 [2 - 3]	flat response de-emphasised response
PL230*	1 - 2 [2 - 3] 3 - 4	audio input via AUDIO-2 pad audio from internal CTCSS speech filter audio input via I/O pad P250
PL240*	1 - 2 [2 - 3] or 3 - 4 4 - 5	bypass high pass filter 300Hz high pass filter in circuit audio input via PL230 or I/O pad
PL250	[1 - 2] 2 - 3	noise mute carrier mute
PL260	1 - 2 [2 - 3]	RX-DISABLE link not connected
PL270	[1 - 2] 2 - 3	relay link not connected

*Refer to Section 1.7.2 for further details.

 Copyright TEL

1.7.2 Audio Processor Linking Details For CTCSS

You must connect the audio processor links correctly according to the CTCSS option used, as shown in the table below.

CTCSS Option	PL230	PL240
standard, no CTCSS	2 - 3	2 - 3
received CTCSS + speech passed to line output	3 - 4	1 - 2
high pass filtered speech, internal CTCSS detection	2 - 3	4 - 5
external CTCSS detection	1 - 2	4 - 5

The conditions stated in the above table are defined as follows:

- standard, no CTCSS
  - no CTCSS or other sub-audio signalling used
  - audio bandwidth 300Hz to 3kHz
  - hum & noise -55dB
- received CTCSS tone + speech to line output
  - tone and speech transmitted down 600 ohm line
  - audio bandwidth 10Hz to 3kHz
  - hum & noise -45dB
- high pass filtered speech + internal CTCSS detection
  - 400Hz to 3kHz
  - hum & noise -30dB with 250.3Hz tone present
- external CTCSS detection
  - decoding performed through the receiver (but externally)
  - speech injected back into receiver via "AUDIO-2" and sent down 600 ohm line

Note 1: AUDIO-2 is available on D-range 1 (PL100) pin 7 via the link resistor R160. Although PL100 pin 7 is already assigned to SERIAL-COM, this can be disabled by removing R808.

Note 2: External CTCSS units can connect in series with the audio chain via AUDIO-1 and AUDIO-2.

Copyright TEL

2 T836/837 Optional Features

2.1 Audio Processor

The T836 and T837 come with a number of link selectable features which give added system flexibility.

Note: The tables in this section are the same as those in Section 3.5 in Part C. They have been repeated here for ease of reference.

2.1.1 Link Details

Use the following table to set up the audio processor to the configuration you require. You should set the audio processor links before carrying out any of the tuning and adjustment procedures. The factory settings are shown in brackets [ ].

Plug	Link[a]		Function
PL205	1-2	A	not connected
	[3-4]	B	microphone pre-amp. output to compressor input
	5-6	C	microphone pre-amp. output to multiplexer input
PL210	[1-2]	L	multiplexer output to pre-emphasis input
	3-4	M	multiplexer output to limiter input
	5-6	N	multiplexer output to compressor input
PL215	1-2	G	not connected
	[3-4]	H	compressor output to multiplexer input
	5-6	I	compressor output to limiter input
	7-8	J	compressor output to pre-emphasis input
	9-10	K	not connected
PL220	1-2	D	pre-emphasis output to multiplexer input
	[3-4]	E	pre-emphasis output to limiter input
	5-6	F	not connected

a. The letters in this column and in the table in Section 2.1.2 below refer to the identification letters screen printed onto the PCB beside each pair of pins.

2.1.2 Typical Options

	PL205	PL210	PL215	PL220
microphone pre-amp. compressed and pre-emphasised; line input pre-emphasised (standard set-up)	[3-4] B	[1-2] L	[3-4] H	[3-4] E
microphone pre-amp. compressed and pre-emphasised; line input unprocessed	3-4 B	3-4 M	7-8 J	1-2 D
line and microphone compressed and pre-emphasised	5-6 C	5-6 N	7-8 J	3-4 E
microphone pre-amp. compressed; line and microphone flat response	3-4 B	3-4 M	3-4 H	5-6 F

2.2 Line Transformer Inputs And Outputs

The line transformer (T210) is designed to provide a balanced interface to 600 ohm lines. For normal operation the two centre connections (LINE I/P 2, LINE I/P 3) are shorted together, and the 600 ohm line is connected between LINE I/P 1 and LINE I/P 4.

The secondary winding of the transformer is connected via 1k and 10Ω (R160) resistors to pin 6 (AUDIO-2) of D-range 1 and may be used to monitor audio on the line. Pin 7 of D-range 1 can be reconfigured as AUDIO-1 by removing R808 and R160, and placing %R150 (refer to Section 2 in Part I for more details).

2.3 Opto Key

The keying circuitry may be completely isolated from the rest of the system by means of the optocoupler (IC250) connected between pins 11 and 12 of the D-range connector. A constant current source (Q270) allows keying voltages between 6 and 50V.

2.4 Relay Driver

A dedicated transistor (Q250) is provided for the purpose of switching an external (e.g. coaxial) relay. The output is open collector and is activated by the Tx-reg rail. This output is available on pin 9 of the T800-03-0000 auxiliary D-range connector (D-range 2).

 Copyright TEL

2.5 Local Microphone

Use of the local microphone (via the front panel stereo socket) will disable the audio input from the line. The audio switching occurs when the PTT switch is closed.

2.6 Keying With Option PCBs

If an option PCB is fitted, the exciter may be keyed via the TX-ENB-OPT pad in the audio processor. The line must be pulled low to key.

Copyright TEL

3 Talk Through Repeater

In this configuration the receiver directly keys the transmitter when the signal is received. The demodulated audio is fed via 600 ohm lines to the transmitter to modulate the carrier. The receiver and transmitter operate simultaneously and must therefore be on different frequencies. The minimum frequency separation depends on the duplexer used.

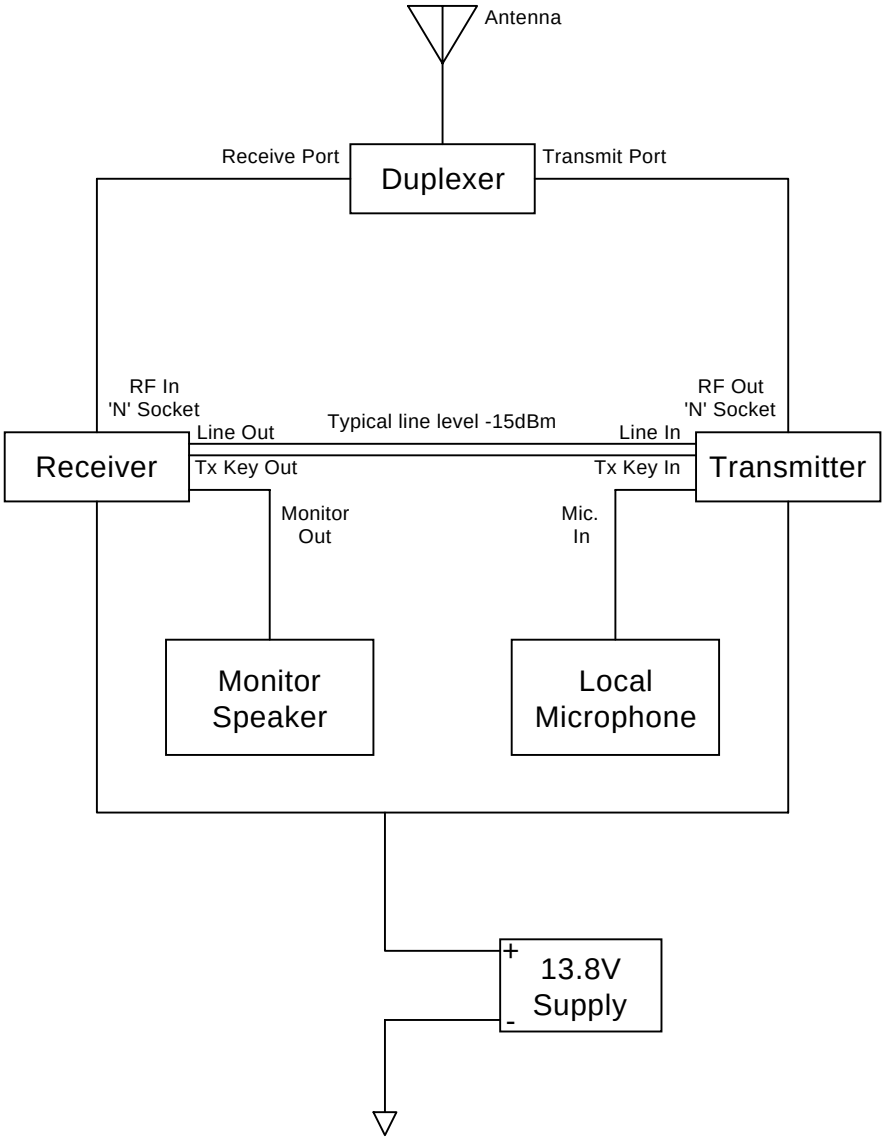

Figure 3.1 Talk Through Repeater

Copyright TEL

4 Line Controlled Base Without Talk Through

4.1 General

This installation contains a transmitter and receiver which may or may not be on the same frequency, thus simultaneous transmission and reception is not possible. When the transmitter is keyed, the coaxial relay is also energised. When the relay is in its rest position, signals from the aerial are passed to the receiver and the demodulated output is fed via 600 ohm lines to the RCU.

The receiver is disabled when the transmitter is energised to prevent the receiver mute opening from RF due to lack of isolation in the relay, direct radiation or the noise skirt of the dual frequency link.

Since the base station may be controlled via a 2-wire line and a 4-wire to 2-wire hybrid, there is a possibility of system oscillation if the receiver is not disabled during transmit. This occurs when the transmit energy enters the receiver and produces an audio response which can pass from the receive to the transmit audio part of the hybrid (impedance imbalance, etc).

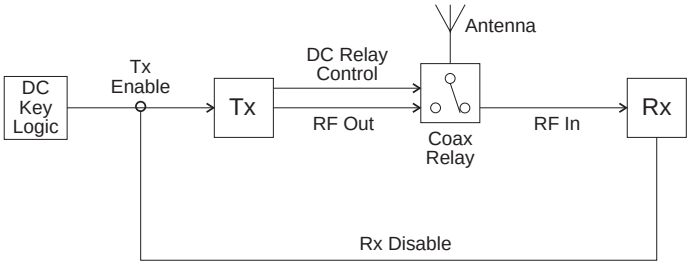

Figure 4.1 Basic Configuration

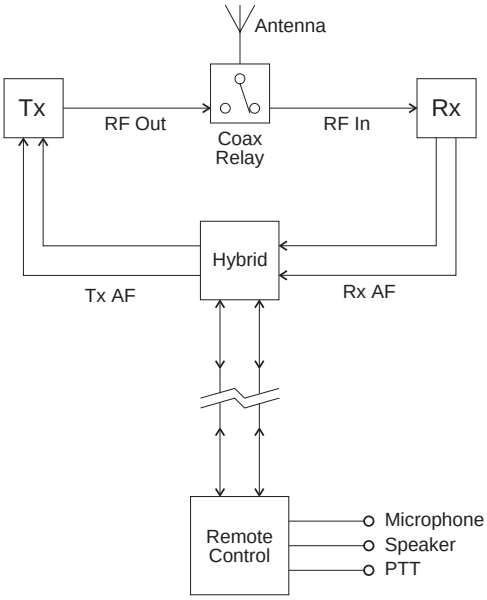

Figure 4.2 Remote Line Controlled Base Station

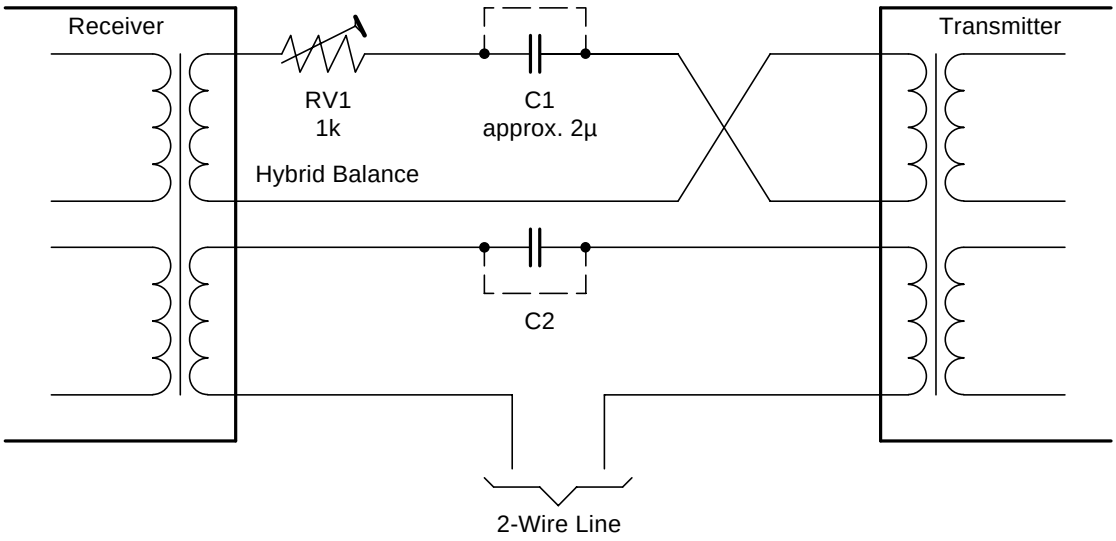

Figure 4.3 4-Wire to 2-Wire Converter

4.2 Transmitter Tail Timer

If the transmitter has the tail timer enabled:

- the receiver disable timer must be set so that ^{t}Rx/Dis > ^{t}Tx/Tail;

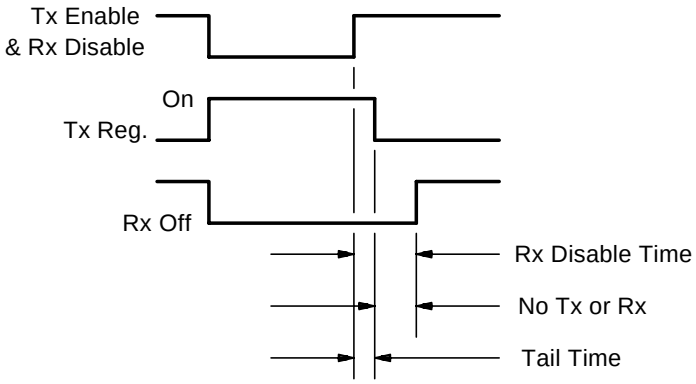

Figure 4.4 Receiver Disable Time vs Tail Time

- if the system configuration also uses an aerial changeover relay as well as the tail timer, the changeover relay must be driven from the relay driver (Q250) in the audio processor, rather than by Tx key or Tx enable; this output is available on pin 9 of the T800-03-000 auxiliary D-range (D-range 2);

- depending on tail time requirements, it is possible for the transmitter tail time to exceed the receiver disable time capability; in this situation the receiver disable line should also be driven from relay driver Q250 (D-range 2 pin 9).

 Copyright TEL

5 DC Line Keying

Where the transmitter and receiver are separated by only a short distance and DC isolation is not required, DC loop keying may be employed.

A small DC current (usually less than 10mA) can be fed via the balanced 2-wire line to provide remote control of various functions.

In a duplex system the receiver mute is used to key a transmitter, provided there is a common earth between the two units (refer to Figure 5.1).

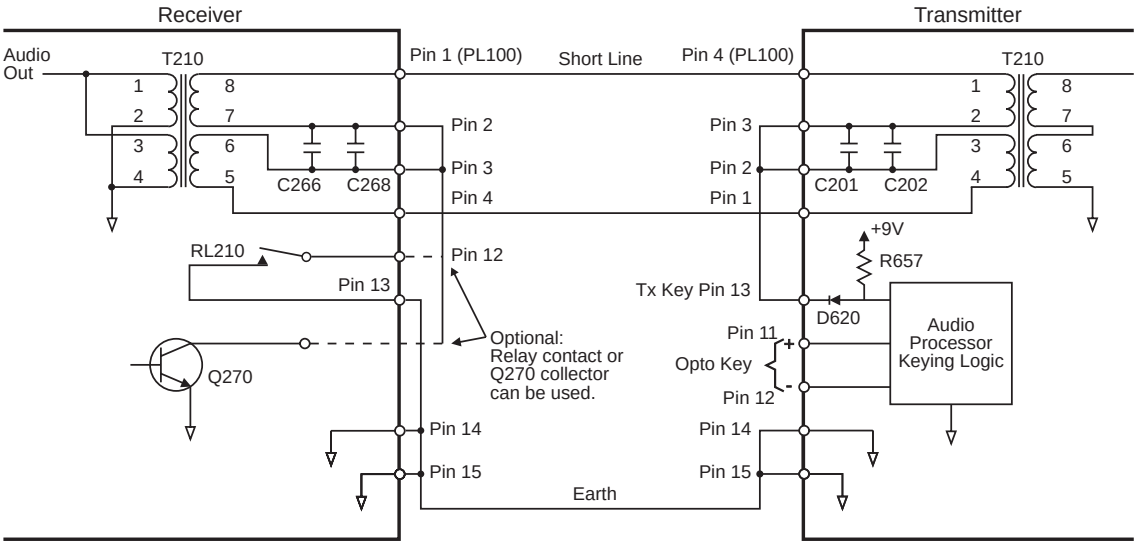

Figure 5.1 DC Loop Keying With Common Earth

Where the receiver and transmitter (or remote control) are distant, DC loop keying is provided by an isolated supply, driver and detector because an earth cannot be relied on (refer to Figure 5.2, Figure 5.3 & Figure 5.4).

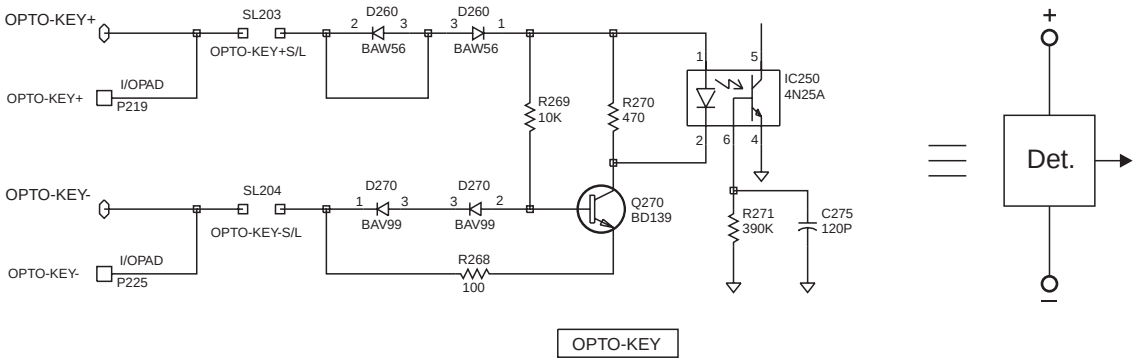

Figure 5.2 Isolated Constant Current Loop Current Detector (Opto-key input on T836 & T837)

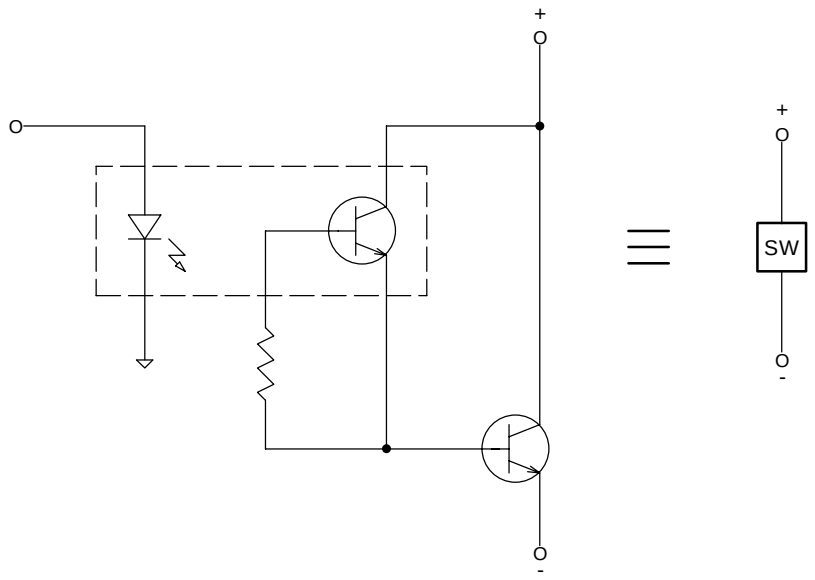

Figure 5.3 Isolated Loop Current Switch

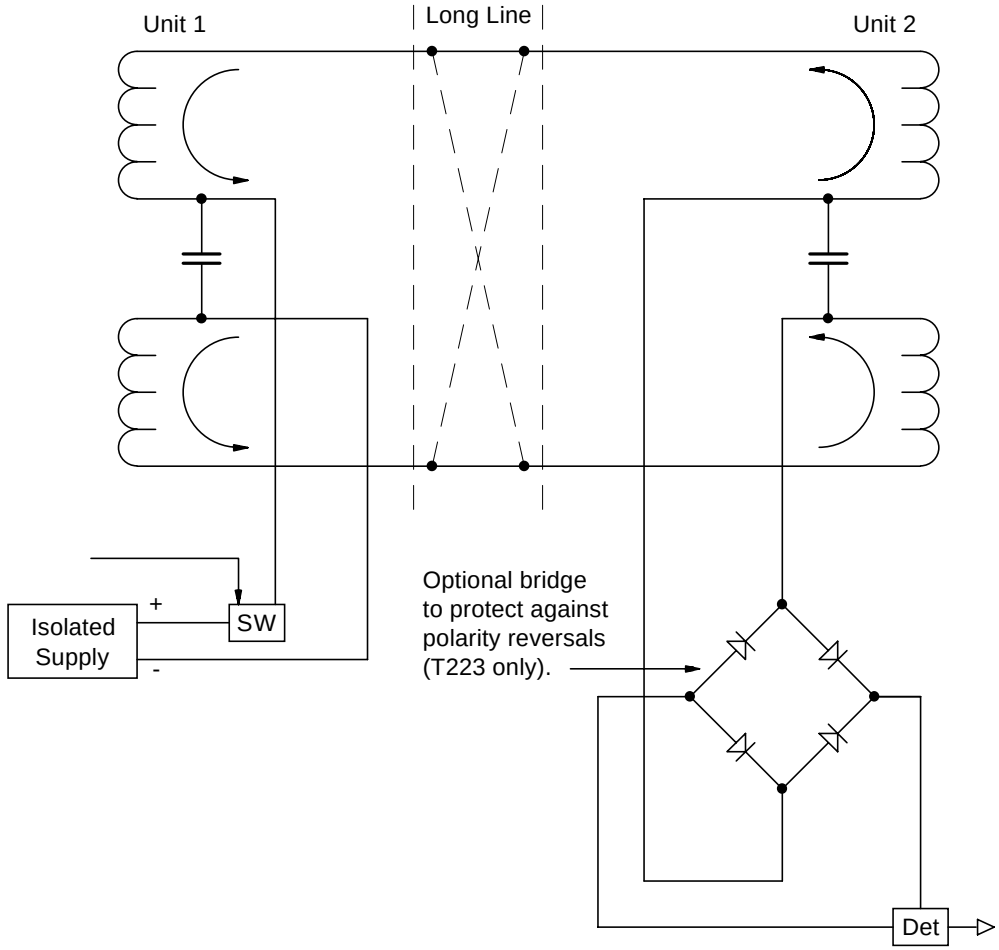

Figure 5.4 Typical System

 Copyright TEL

Part H T800 Ancillary Equipment

This Part of the manual features a brief description of the major ancillaries that may be used with T800 Series II equipment. For a comprehensive list of available ancillary equipment, please contact your nearest Tait Dealer or Customer Service Organisation.

Section	Page
Programming Kits	**1**
General Ancillaries	**2**
Paging	**5**
External Frequency Reference	**6**
Rack Frames	**7**
Rack Frame Guides	**9**
Rack Frame PCBs	**11**
Rack Frame Ancillaries	**12**
Front Panels	**13**
Power Supplies	**14**

Copyright TEL

T800 Ancillary Equipment

Programming Kits

T800-01-0000

The T800-01-0000 kit is used for programming T800 Series II base station equipment using a standard IBM™ (or compatible) PC.

The kit comprises the following items:

PGM800Win programming software user's manual
PGM800Win Windows™ based programming software on 3½" floppy discs
T800-01-0002 programming cable.

T800-01-0001

The T800-01-0001 kit is the same as the T800-01-0000 kit described above, but with the addition of the T800-01-0004 module programming interface.

T800-01-0002

The T800-01-0002 programming cable connects the PC directly to the programming socket on the T800 Series II rack frame speaker panel or backplane PCB, thus enabling T800 Series II modules to be read or programmed while in the rack frame. It can also connect to the programming socket on the T800-01-0004 programming module interface if the module is to be read or programmed while out of the rack frame.

T800-01-0003

The T800-01-0003 programming kit contains a T800-01-0002 programming cable and a T800-01-0004 programming module interface.

T800-01-0004

The T800-01-0004 programming module interface is designed to allow a PC to connect directly to a T800 Series II module. It comprises a small PCB on which is mounted a D-range socket, a programming socket, a Micromatch socket and a DC input connector.

The T800-01-0004 plugs directly into D-range 1 or D-range 2 (selected by a switch on the PCB), or into SK805 in the microcontroller compartment via the supplied ribbon cable loom, and is then connected to the PC with a T800-01-0002 programming cable.

Refer to the T800 Ancillary Equipment Service Manual for more information.

General Ancillaries

T004-72 RF Coaxial Relay

The T004-72 is an RF coaxial relay assembly fitted with three female N-type connectors, and comes complete with a mounting bracket and two coaxial cables terminated in male N-type connectors. It can be used, for example, in base station applications where the receiver and transmitter share the same antenna, in which case it can be driven by the T800 Series II transmitter/exciter relay driver (refer to Section 2.4 in Part G for more information).

T800-01-0010 Calibration Test Unit

The T800-01-0010 provides all inputs and outputs necessary to carry out the full tuning and adjustment procedure for T800 Series I and II receivers, exciters and transmitters. It provides a convenient method of connecting test equipment, including a PC and power supply, to a T800 Series I or II module (via D-range 1) without the need to construct custom wiring looms.

The T800-01-0010 also has a built-in speaker, a switch for selecting Series I or II modules, and uses standard BNC and "banana plug" sockets.

Refer to the T800 Ancillary Equipment Service Manual for more information.

T800-03 Auxiliary D-Range

The T800-03 is an additional D-range kit comprising one D-range plug assembly and two locating pins, nuts & washers. Although originally a T800 Series I ancillary, it can be used in T800 Series II products for special applications requiring custom internal wiring.

T800-03-0000 Auxiliary D-Range

The T800-03-0000 is an additional D-range kit (normally fitted as D-range 2) comprising one D-range plug assembly complete with connecting loom and mounting screws. The ribbon cable loom connects the D-range PCB to the Micromatch socket (SK805) in the microcontroller compartment. Typical uses of the T800-03-0000 are in paging applications and where external channel control is required. Refer to Figure 1.4 and Figure 2.4 in Part F for the T800-03-0000 pin connections.

 Copyright TEL

T800-04-0000 RSSI

The T800-04 RSSI option PCB plugs directly into the main PCB (support circuitry being fitted as standard). It is fitted to the T855, T875 and T885 whenever receiver signal strength monitoring is required, e.g. trunking or voting. Its function is to provide a DC voltage proportional to the signal level at the receiver input.

Refer to the appropriate service manual.

T800-08-0000 Ancillary Chassis

The T800-08-0000 is a general purpose chassis designed to be mechanically and electronically compatible with a T800 Series II rack frame. It comprises the following items:

- top and bottom chassis rails
- side panels
- rear panel
- PCB mounting brackets
- double D-range plug assembly (for mounting directly on a PCB)
- T800 Series II blank front panel complete with handle.

Custom designed PCBs for special applications can be mounted in several positions inside the chassis to provide a convenient, plug-in module that interfaces directly with a T800 Series II rack frame.

Refer to Technical Note TN-512 for further information.

T800-10-0000 Channel Select PCB

The T800-10-0000 is a small PCB that plugs into the Micromatch connector (SK805) in the microcontroller compartment of a T800 Series II receiver, exciter or transmitter. It is fitted with an eight-switch DIP switch which allows the manual selection of any one of the channels already programmed into the module by PGM800Win. The T800-10-0000 is also fitted with a Micromatch socket to provide access to SK805 for programming purposes.

T800-80 Local Microphone

A 600Ω microphone complete with 300mm cord terminated in a ¼" stereo plug.

T818-01-0000 Receiver/Transmitter Monitor

The T818-01-0000 (formerly T318-02) is designed to monitor the basic operational functions of one T800 receiver and transmitter. The meter and selector switches for monitoring the required functions are mounted on the front panel, as is the monitor speaker which is driven by a built-in amplifier. An optional mute circuit may be used to silence the audio when no carrier is present.

Refer to M318-02.

 Copyright TEL

Paging

T800-30-0000 & T800-30-0002 DFSK Modulators

The T800-30-0000 (formerly T800-30) and T800-30-0002 (formerly T800-35) are DFSK modulators for T800 Series II transmitters, suitable for POCSAG or similar paging data formats. Analogue transmissions (e.g. tone or speech) are still possible by disabling the data path via a control line. 512 or 1200 baud data rates are link selectable. The T800-30-0002 is adapted for use with an external reference oscillator for simulcast transmission. The T800-30-0000 and T800-30-0002 are not designed for use with 66 to 88MHz equipment.

Refer to the T800 Ancillary Equipment Service Manual for more information.

T800-32-0000 & T800-32-0010 DFSK Modulators

The T800-32-0000 and T800-32-0010 are DFSK modulator PCBs which can be fitted to T800 Series II transmitters to enable them to function as low-speed paging transmitters. These new PCBs have been specifically designed for Series II transmitters and will be much easier to fit into the latest design transmitters.

Both PCBs are suitable for POCSAG or similar paging data formats, but are not designed for analogue transmissions (e.g. tone or speech). The T800-32-0010 is adapted for use with an external reference oscillator for simulcast transmission. The T800-32-0000 and T800-32-0010 are not designed for use with 66 to 88MHz equipment.

External Frequency Reference

T800-06-0000 External Frequency Reference Kit

The T800-06-0000 kit provides an additional D-range plug/PCB assembly which incorporates a miniature RF connector to carry an externally generated 12.8MHz reference signal into a T800 Series II module. This enables the use of very high stability external reference oscillators for special applications.

The D-range PCB is also fitted with a Micromatch socket which can be connected to SK805 in the microcontroller section via the supplied loom to provide access to the channel change lines.

The kit comes complete with fitting instructions and all installation hardware.

T800-06-0001 External Frequency Reference Kit

The T800-06-0001 is the same as the T800-06-0000 kit with the addition of a special coax cable for external frequency reference input. One end of this coax is terminated with a miniature RF connector which fits into the D-range socket in an appropriate backplane PCB (e.g. T800-52-0000) to connect to a T800 Series II module fitted with a T800-06-0000 kit. The other end is terminated with a BNC connector which can be mounted on the rack frame.

T801 Frequency Reference Module

The T801 frequency reference module provides a high stability frequency source to which the synthesiser within a T800 Series II base station can be locked. The master standard within the T801 is primarily intended to be rubidium, although high quality ovenised crystal oscillators can also be used in applications where more frequent readjustment of frequency is acceptable. The T801 converts the output frequency from its master standard to the 12.8MHz required by the T800 Series II base station.

Refer to M801-00.

T801-10 OCXO Module

The T801-10 OCXO module provides a high stability frequency source to which the synthesiser within a T800 Series II base station can be locked. This will provide T800 Series II transmitters with the frequency stability required for simulcast transmission. The master standard within the T801-10 is a high quality ovenised crystal oscillator (OCXO). Three outputs are provided on the rear panel, which allows up to three T800 Series II transmitters to be referenced to the source oscillator.

Refer to M801-10.

 Copyright TEL

Rack Frames

T800-22-0000

The T800-22-0000 is a standard 5U high rack frame complete with wiring loom which is designed to accommodate one 25, 50 or 100W base station or repeater. It comes fully assembled with the following items:

T800-15-0000 speaker panel with programming port
T800-40-0001 blank panel (x2)
T800-41-0002 double module guide
T800-44-0000 power supply guide
T800-45-0000 PA guide
T800-50-0000 standard rack frame backplane PCB.

Refer to the T800 Ancillary Equipment Service Manual for more information.

T800-22-0001

The T800-22-0001 is the same as the T800-22-0000, but is supplied packed flat in disassembled form for ease of transport. The wiring loom and backplane PCB are, however, supplied complete and ready for installation.

T800-22-0002

The T800-22-0002 is a standard 5U high rack frame without wiring loom which is designed to accommodate one 25, 50 or 100W base station or repeater. It comes fully assembled with the following items:

T800-15-0000 speaker panel with programming port
T800-40-0001 blank panel (x2)
T800-41-0002 double module guide
T800-44-0000 power supply guide
T800-45-0000 PA guide.

T800-22-0003

The T800-22-0003 is the same as the T800-22-0002, but is supplied packed flat in disassembled form for ease of transport.

T800-22-0004

The T800-22-0004 is a standard 5U high rack frame without wiring loom, guides or front panels which comes fully assembled.

T800-22-0005

The T800-22-0005 is the same as the T800-22-0004, but is supplied packed flat in disassembled form for ease of transport.

T800-23-0000 Slimline Repeater Mounting Kit

The T800-23-0000 Slimline Repeater kit enables one T800 Series II receiver and one T800 Series II transmitter to be mounted horizontally side-by-side in a standard 483mm rack frame. The kit contains a front panel complete with speaker, programming port, an options tray (for mounting a power supply, duplexer, etc.), and a wiring loom to connect the two T800 modules to the terminal blocks mounted on the rear of the options tray. The T800-23-0010 mains power supply (available separately) is designed for use with the T800-23-0000. The rack height of the assembled unit is 2U.

T800-23-0001 Slimline Repeater Mounting Kit

The T800-23-0001 Slimline Repeater kit is the same as the T800-23-0000, but is supplied with a T800-23-0010 power supply and no options tray.

 Copyright TEL

Rack Frame Guides

T800-41-0001

The T800-41-0001 rack frame guide is designed to fit into a T800 Series II rack frame and will accept one T800 Series II module (except for power supplies and power amplifiers which must use their own guides). It is supplied disassembled and comprises a top and bottom rail, a rear panel, two D-range sockets and mounting screws.

T800-41-0002

The T800-41-0002 rack frame guide is designed to fit into a T800 Series II rack frame and will accept two T800 Series II modules (except for power supplies and power amplifiers which must use their own guides). It is supplied disassembled and comprises two top and bottom rails, a double width rear panel, four D-range sockets and mounting screws.

T800-41-0003

The T800-41-0003 rack frame guide is designed to fit into a T800 Series II rack frame and will accept three T800 Series II modules (except for power supplies and power amplifiers which must use their own guides). It is supplied disassembled and comprises three top and bottom rails, a triple width rear panel, six D-range sockets and mounting screws.

T800-41-0004

The T800-41-0004 rack frame guide is designed to fit into a T800 Series II rack frame and will accept four T800 Series II modules (except for power supplies and power amplifiers which must use their own guides). It is supplied disassembled and comprises four top and bottom rails, a four-module wide rear panel, eight D-range sockets and mounting screws.

T800-42-0000

The T800-42-0000 rack frame guide will allow a duplexer to be mounted in a T800 Series II rack frame. It occupies a single module space and comprises a folded metal chassis, mounting brackets and screws.

Copyright TEL

T800-42-0001

The T800-42-0001 rack frame guide is the same as the T800-42-0000 described above, but with the addition of a duplexer front panel.

T800-42-0002

The T800-42-0002 rack frame guide is the same as the T800-42-0000 described above, but with the addition of a blank front panel.

T800-43-0000

The T800-43-0000 rack frame guide is designed to fit into a T800 Series II rack frame and will accept one T300 or T1500 Series module (e.g. T318-02, T1511). It is supplied disassembled and comprises a top and bottom rail, two T300 D-range socket boxes and mounting screws. The T800-43-0000 is not compatible with the T800 Series II rack frame backplane PCB. Consult your nearest Tait Dealer or Customer Service Organisation for more details about T300/T1500 Series compatibility with T800 Series II rack frames.

T800-43-0001

The T800-43-0001 is the same as the T800-43-0000 but is supplied with only one D-range socket box.

T800-44-0000

The T800-44-0000 rack frame guide is designed to fit into a T800 Series II rack frame and will accept one T800 Series II power supply. It comprises a top and bottom rail and mounting screws.

T800-45-0000

The T800-45-0000 rack frame guide is designed to fit into a T800 Series II rack frame and will accept one T800 Series II 50W power amplifier. It comprises a top guide stop, a bottom guide rail and mounting screws.

T800-45-0001

The T800-45-0001 rack frame guide is designed to fit into a T800 Series II rack frame and will accept one T800 Series II 100W power amplifier. It comprises a top guide stop, a bottom guide rail, extra mounting brackets for the double width front panel and mounting screws.

 Copyright TEL

Rack Frame PCBs

T800-50-0000

The T800-50-0000 backplane PCB is designed to allow a T800-22-0000 rack frame to be easily configured as either a base station or repeater. The PCB mounts across the rear panel of the T800-41-0002 double module rack frame guide, enabling a T800 Series II receiver and exciter/transmitter to plug directly into the D-range sockets provided on the inner side of the PCB (both D-range 1 and D-range 2 are provided for). The other side of the PCB features a programming port, D-range connectors which provide all module inputs and outputs, and two DIP switches for external channel selection.

Refer to the T800 Ancillary Equipment Service Manual for more information.

T800-50-0001

The T800-50-0001 is similar in function and design to the T800-50-0000, but is designed to allow connection of TA087 or TA387 channel select panels. It has one 25-way OEM D-range connector, but will not accept personality PCBs.

T800-52-0000

The T800-52-0000 is similar in function and design to the T800-50-0000, but is designed for use in Quasi-Sync applications. The PCB has an external reference D-range fitted and has provision for connecting TA087 or TA387 channel change/speaker panels and a TA136 alarm panel. The T800-52-0000 will not accept personality PCBs.

T800-60-0000

The T800-60-0000 personality PCB is designed to plug into the two 25-way D-range sockets on the T800-50-0000 backplane PCB. The T800-60-0000 provides channel selection for both receiver and exciter/transmitter via a single DIP switch, remote channel selection and alarm monitoring via Micromatch sockets, and receiver and exciter/transmitter inputs and outputs via a 25-way D-range socket.

Rack Frame Ancillaries

T800-13-0000 Extender Rail

The T800-13-0000 extender rail allows a T800 Series II receiver, exciter or transmitter to be operated out of the rack frame with the covers off for tuning purposes. It is fitted with two 15-way D-range connectors.

T800-14-0000 Extender Rail

The T800-14-0000 extender rail is the same as the T800-13-0000, but is intended for equipment using an external reference (e.g. Quasi-Sync). It thus has one 15-way D-range, and one 11-way D-range incorporating a miniature RF connector.

T800-19-0000 Rack Mounting Fan

The T800-19-0000 fan is designed to fit into the base of any standard 483mm rack frame without affecting its ability to house seven modules. The two mounting rails are secured to the rack frame side panels, and the fan is screwed onto the rails under the required module. The kit contains all mounting hardware.

T800-19-0010 Rack Mounting Fan

The T800-19-0010 fan is designed to fit into the base of any standard 483mm rack frame without affecting its ability to house seven modules. The fan is mounted directly onto the underside of the bottom guide rails with two mounting brackets. The kit contains all mounting hardware.

 Copyright TEL

Front Panels

T800-15-0000 Speaker Panel

A 60mm speaker panel fitted with a 4Ω speaker and programming socket. It comes complete with mounting hardware and a cable to connect the programming socket to the backplane PCB.

T800-15-0001 Speaker Panel

A 60mm speaker panel fitted with a 4Ω speaker, complete with mounting hardware.

T800-17-0010 Circuit Breaker Panel

A 60mm front panel fitted with a 10A magnetic circuit breaker. The circuit breaker also functions as an on/off switch to control the supply of power to the rack frame. The T800-17-0010 is intended primarily for use with rack frames powered by batteries (or with a battery back-up supply) and comes complete with mounting hardware.

T800-17-0020 Circuit Breaker Panel

The same as the T800-17-0010, but fitted with a 20A circuit breaker.

T800-40-0000 Blank Panel Fitting Kit

The mounting brackets and screws necessary to fit a T800 Series II 60mm blank front panel into a T800 Series II rack frame.

T800-40-0001 Blank Panel

A T800 Series II 60mm blank panel complete with mounting brackets and screws.

Power Supplies

T800-23-0010 Mains Power Supply

The T800-23-0010 mains power supply is designed to power the T800-23-0000 Slimline Repeater and mounts on the front panel instead of the options tray. It requires a mains input voltage (auto range) of 85-132/170-264V AC at 47-440Hz.

Refer to the T800 Ancillary Equipment Service Manual for more information.

T807-10-0000 Mains Power Supply

The T807-10-0000 is a switching power supply capable of supplying up to 15A at 11-14V DC. It requires a mains supply of 230V/50Hz or 115V/60Hz (nominal values) which can be internally selected with a switch. The T807-10-0000 is designed to power T800 Series II 50W transmitters (plus receivers, etc.) and requires a T800-44-0000 guide to fit into a T800 Series II rack frame.

Refer to the T800 Ancillary Equipment Service Manual for more information.

T808-10-0000 Mains Power Supply

The T808-10-0000 is a switching power supply capable of supplying up to 25A at 11-14V DC. It requires a mains supply of 230V/50Hz or 115V/60Hz (nominal values) which can be internally selected with a switch. The T808-10-0000 is designed to power T800 Series II 100W transmitters (plus receivers, etc.) and requires a T800-44-0000 guide to fit into a T800 Series II rack frame.

Refer to the T800 Ancillary Equipment Service Manual for more information.

 Copyright TEL

Part I Using T830 Series II Equipment In A Series I Rack Frame

This part of the manual describes how to modify T830 Series II equipment for operation in a T800 Series I rack frame.

Section	Title	Page
1	**Tools Required**	**1.1**
2	**T835/836/837 SII - SI Conversion**	**2.1**
2.1	Introduction	2.1
2.2	Method	2.2
3	**T838/839 SII - SI Conversion**	**3.1**
3.1	Introduction	3.1
3.2	Method	3.2

Figure	Title	Page
2.1	T835 Component Changes	2.3
2.2	T836/837 Component Changes	2.5
2.3	T837 RF Output Coax Routing	2.7
3.1	T838/839 Component Changes	3.3
3.2	T838/839 RF Input Coax Routing	3.5

Copyright TEL

1 Tools Required

Tool	Size	
Allen Head Screwdriver	2mm AF	
Flat Blade Screwdriver	3mm AF	
Pozidriv Screwdrivers	No. 1 for M3 screws	No. 2 for M4 screws
Torx Screwdrivers	T10 for M3 screws	T20 for M4 screws
Spanners	1/4″ AF for D-range locating pins 5.5mm AF for M3 nuts[a] 6mm AF for SMC connector 7mm AF for M4 nuts	
Solder		
Soldering Iron		

a. If you do not have a 5.5mm spanner, you can use long-nosed pliers to carefully grip the M3 nuts on the D-range securing screws and locating pins.

Copyright TEL

2 T835/836/837 SII - SI Conversion

2.1 Introduction

You must make a number of modifications to enable a T830 Series II receiver, exciter or transmitter to operate in a Series I rack frame. These changes can be split into two groups, mechanical and electrical, as described below.

Mechanical	These changes involve: • putting on a new front panel because of the differences in height and width between a Series II and Series I panel; • adding D-range locating pins as the Series I rack requires them for alignment.
Electrical	These changes involve: • making sure there is pin compatibility for D-Range 1 pin 7 between the Series II module and the Series I rack frame; in Series I, pin 7 is allocated to audio 1 for the transmitter/exciter, and audio 2 for the receiver; • converting the exciter from rear RF output to front RF output; • disabling cyclic keying in the exciter.

This procedure assumes you have already purchased the appropriate Series I conversion kit:

- T835 - T800-70-0035
- T836 - T800-70-0036
- T837 - T800-70-0037.

If not, you should purchase one from your nearest Tait Dealer or Customer Service Organisation before beginning the procedure.

It should take approximately 15-20 minutes per module to perform these steps.

2.2 Method

Step	Action
1	Remove the Series II front panel from the module as follows: • remove the volume knob (T835 only); • remove the four screws using a Torx screwdriver; • push the LEDs from the front of the panel to remove them from their grommets.
2	Remove both covers from the module.
3	Remove the M3 screws, spring washers, and M3 nuts from D-range 1. ***Note:*** If you have a chassis with threaded holes, you will need to remove only the M3 screws and spring washers.
4	Replace the M3 screws with locating pins, M3 spring washers (and nuts if necessary).
5	**If you are modifying a T835, follow this step; otherwise go to Step 6.** Remove R808 (10Ω), as shown in Figure 2.1. Ensure that R160 (10Ω) is placed, as shown in Figure 2.1. This will convert D-range 1 pin 7 from serial com to audio 2. Go to Step 8.

 Copyright TEL

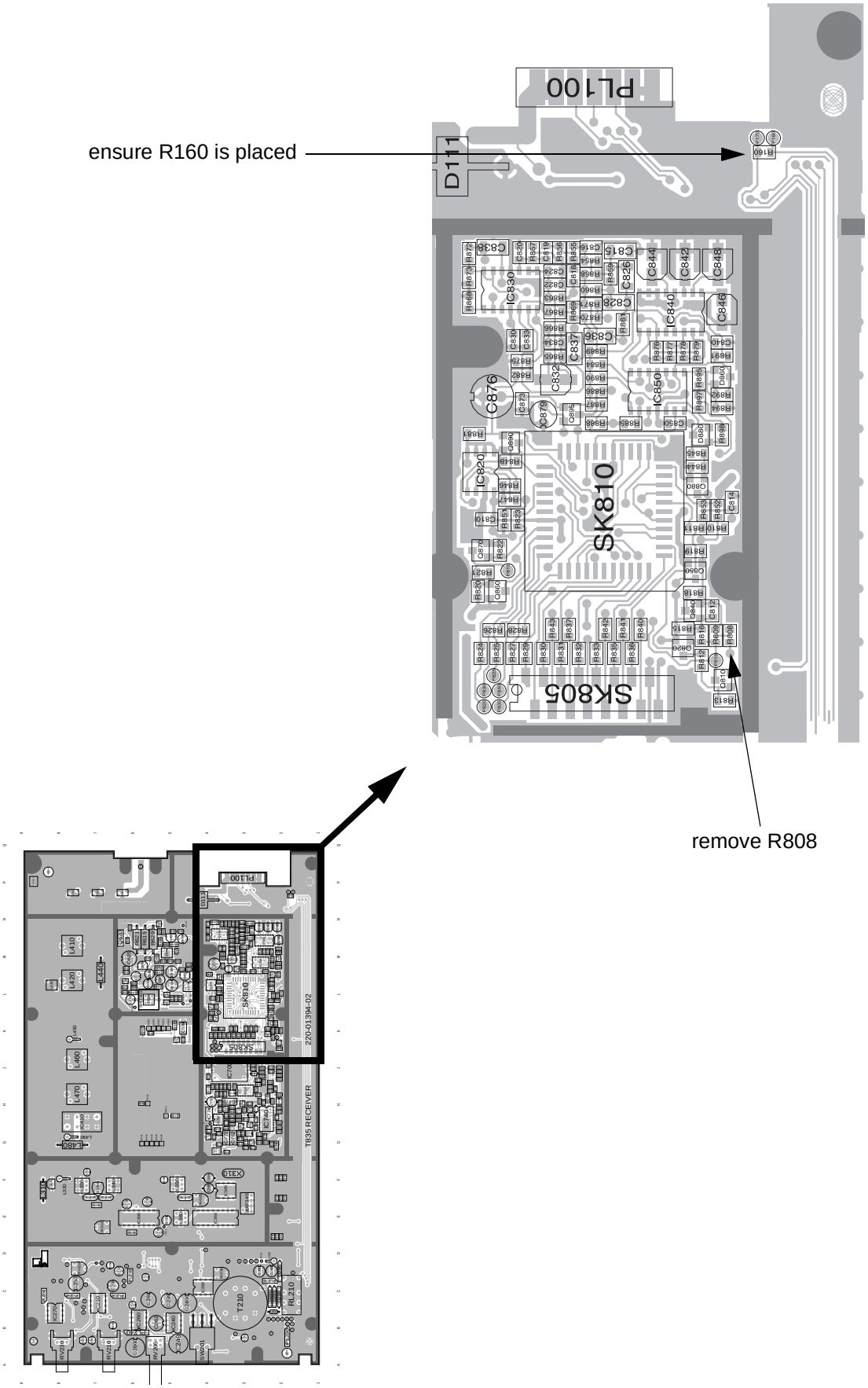

Figure 2.1 T835 Component Changes

Step	Action
6	**If you are modifying a T836, follow these steps (refer to Figure 2.2):** • remove R808 (10Ω) • remove R160 (10Ω) • place %R150 (10Ω). } converts D-range 1 pin 7 from serial com to audio 1 Continue with Step 8. **If you are modifying a T837, follow these steps (refer to Figure 2.2):** • remove R808 (10Ω) • remove R160 (10Ω) • place %R150 (10Ω) } converts D-range 1 pin 7 from serial com to audio 1 • remove L390; this will disable cyclic keying to enable the T837 to work with a Series I PA. Continue with Step 7.

 Copyright TEL

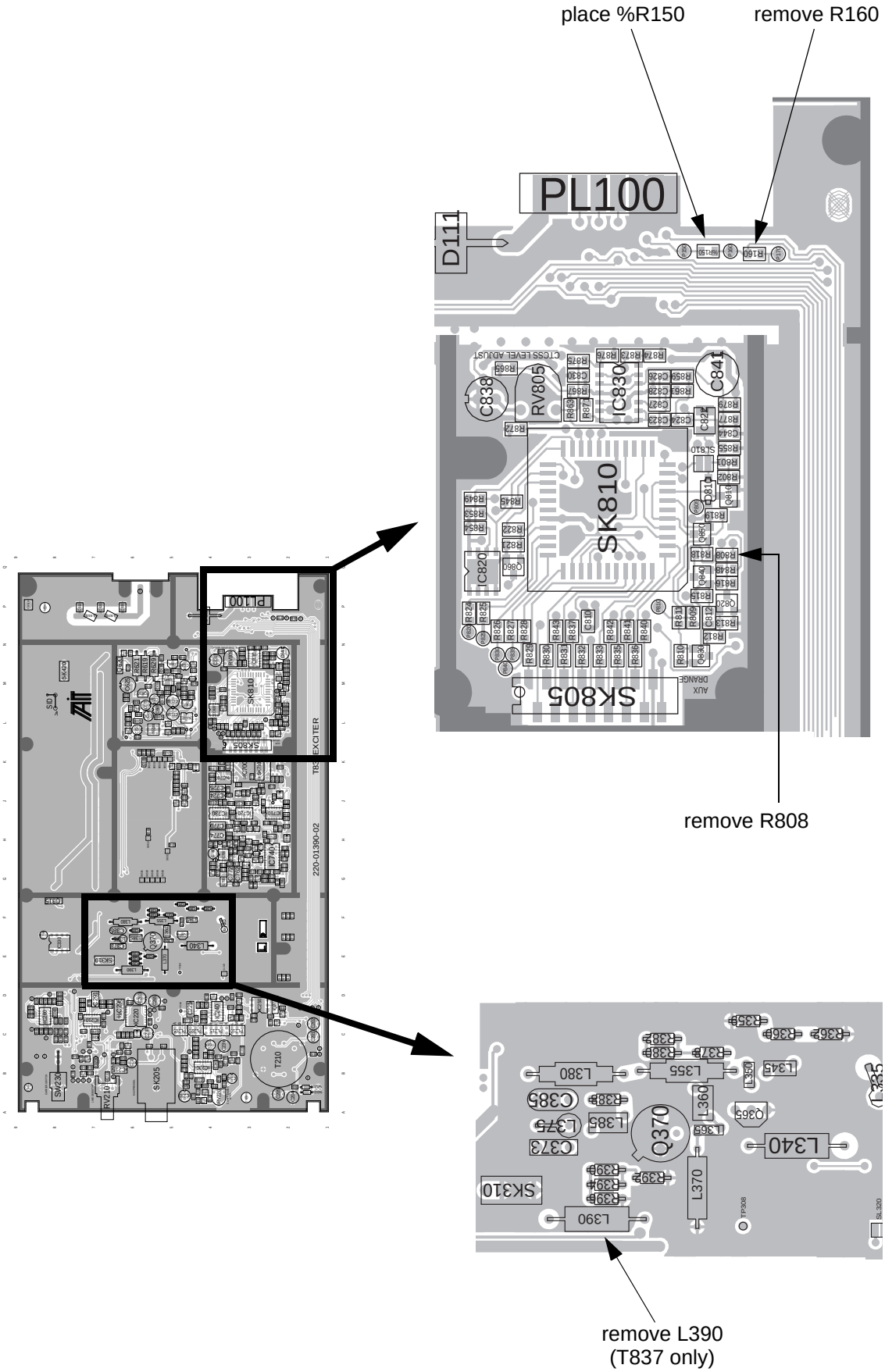

Figure 2.2 T836/837 Component Changes

Step	Action
7	**Converting the T837 from rear panel RF output to front panel RF output.** Desolder, unscrew and remove the rear panel N-type connector. Fit the blanking plate over the hole in the chassis from which the N-type connector has been removed. Unplug the existing coax from SK310 and SK420, retaining the spring clip for the new coax cable. Fit the front panel SMC connector: • insert the coax fitted with the brass SMC connector through the hole in the front of the chassis and secure with the brass nut and washer; • connect the coax from the SMC connector into SK310, securing the coax in the groove provided in the chassis wall with the spring clip (refer to Figure 2.3).
8	Fit all parts of the Series I front panel, following Step 1 in reverse order. ***Note:*** If you have difficulty refitting the LEDs, try pushing the body of the LED back into the grommet with a thin screwdriver or spike. Be very careful while doing this as the legs of the LED are very easy to break.
9	Replace the covers.
10	**Programming** Once you have carried out this conversion procedure, you will no longer be able to program the T830 Series II module via D-range 1. In order to program the module now, you will need to use a programming module interface, such as the T800-01-0004. This device is fitted with a programming socket and can be connected to the module via SK805 in the microcontroller section. You will have to remove the top cover (closest to the handle) to gain access to SK805. ***Note:*** You may still be able to program the module by connecting the T800-01-0004 to a T800-03-0000 auxiliary D-range fitted as D-range 2, but only if pins 8 (ground) and 12 (serial com) of D-range 2 are not used in the Series I configuration.

 Copyright TEL

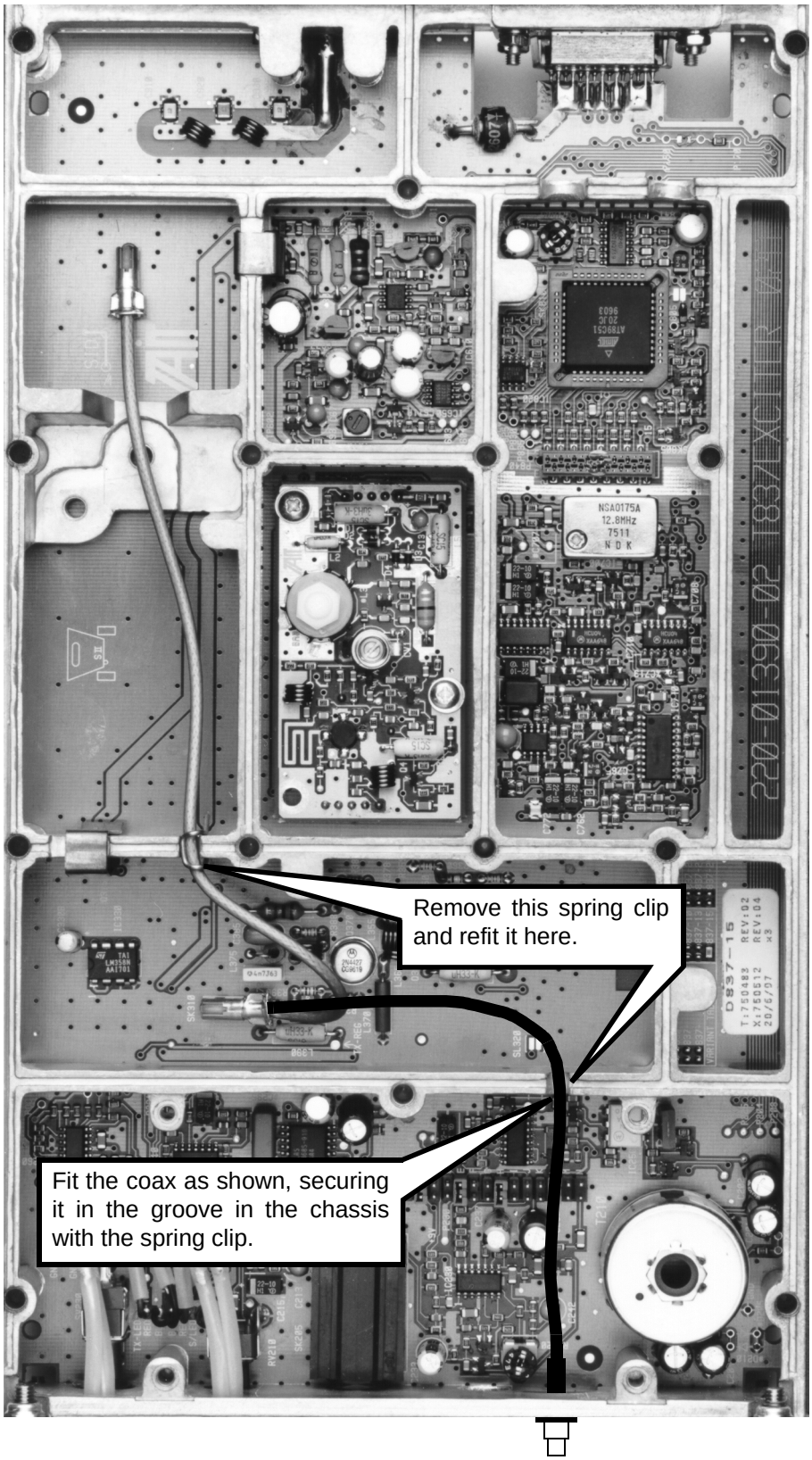

Figure 2.3 T837 RF Output Coax Routing

Copyright TEL

3 T838/839 SII - SI Conversion

3.1 Introduction

You must make a number of modifications to enable a T830 Series II PA to operate in a Series I rack frame. These changes can be split into two groups, mechanical and electrical, as described below.

Mechanical	These changes involve putting on a new front panel because of the differences in height and width between a Series II and Series I panel.
Electrical	These changes involve: • inserting and removing components inside the module to disable cyclic keying; • converting from rear RF input to front RF input.

This procedure assumes you have already purchased the appropriate Series I conversion kit:

- T838 - T800-70-0038
- T839 - T800-70-0039.

If not, you should purchase one from your nearest Tait Dealer or Customer Service Organisation before beginning the procedure.

Note: This procedure applies to the latest design T838/839 PAs which use RF power modules and are identified by the Series II style product code T83X-X0-0000.

It should take approximately 15-20 minutes per module to perform these steps.

3.2 Method

Step	Action
1	Remove the Series II front panel from the PA as follows: • remove the four screws using a Torx screwdriver; • push the LEDs from the front of the panel to remove them from their grommets.
2	Remove the side cover.
3	Follow the step for whichever module you are going to modify: • T838 - go to Step 4; • T839 - go to Step 5. These modifications will disable the cyclic keying.
4	**T838** Remove *L201 (330nH SMD inductor), as shown in Figure 3.1. ***Caution:*** **Do not use excessive heat to remove the inductor or it will melt.** Place *R120 (0Ω SMD resistor), as shown in Figure 3.1.
5	**T839** Remove *L211 (330nH SMD inductor), as shown in Figure 3.1. ***Caution:*** **Do not use excessive heat to remove the inductor or it will melt.** Place *R120 (0Ω SMD resistor), as shown in Figure 3.1.

 Copyright TEL

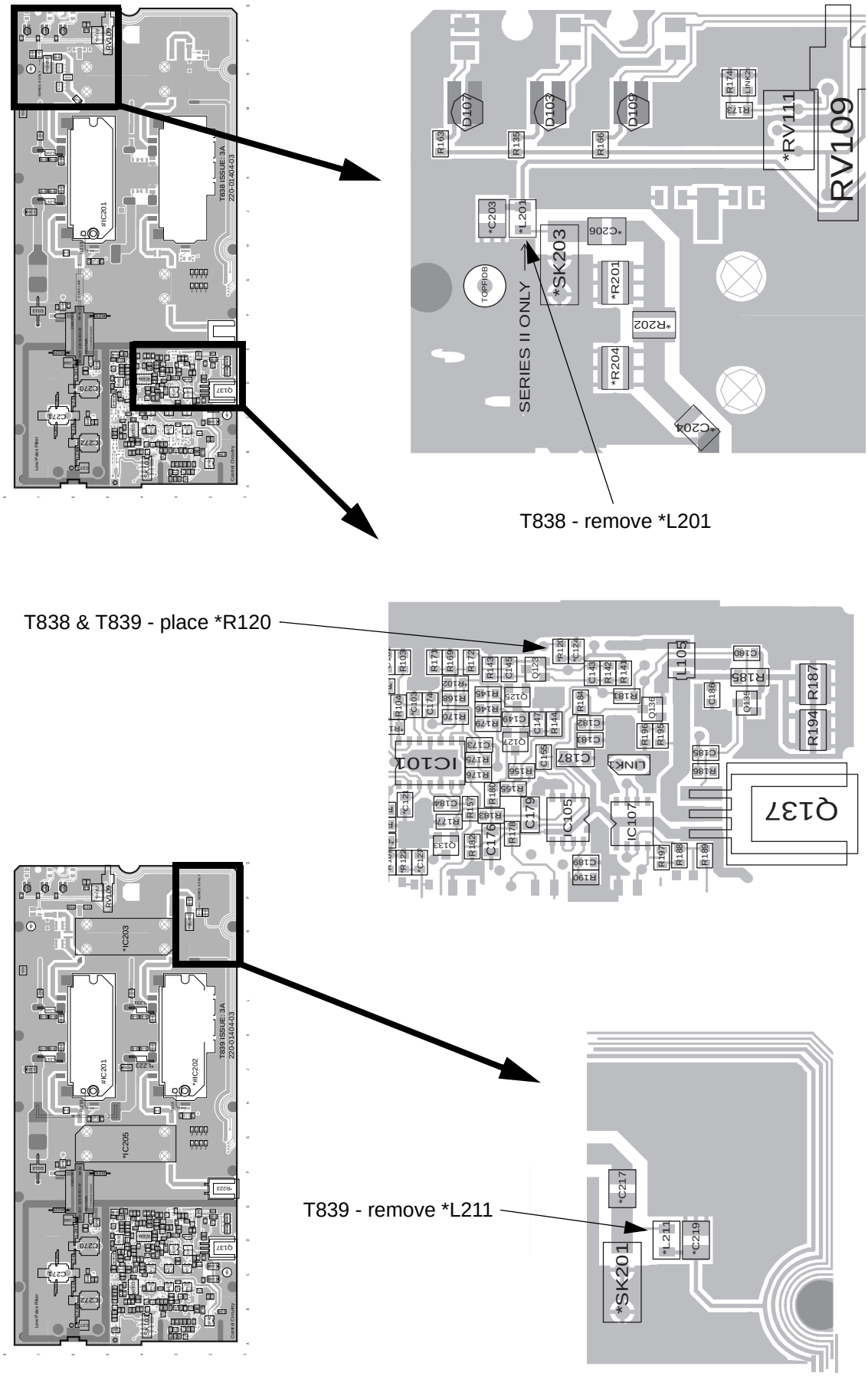

Figure 3.1 T838/839 Component Changes

Step	Action
6	**Converting from rear panel RF input to front panel RF input.** Remove the rear panel BNC connector: • unplug the RF input coax from the socket on the PCB; • unscrew the BNC connector from the chassis; • carefully withdraw the coax from the module through the hole in the rear of the chassis; • fit the blanking plate over the hole in the chassis from which the BNC connector has been removed. Fit the front panel SMC connector: • insert the coax fitted with the brass SMC connector through the hole in the front of the chassis and secure with the brass nut and washer; • connect the coax from the SMC connector into *SK203 (T838) or *SK201 (T839) as shown in Figure 3.2.
7	Refit the side cover.
8	Fit all parts of the Series I front panel, following Step 1 in reverse order. ***Note:*** If you have difficulty refitting the LEDs, try pushing the body of the LED back into the grommet with a thin screw-driver or spike. Be very careful while doing this as the legs of the LED are very easy to break.

 Copyright TEL

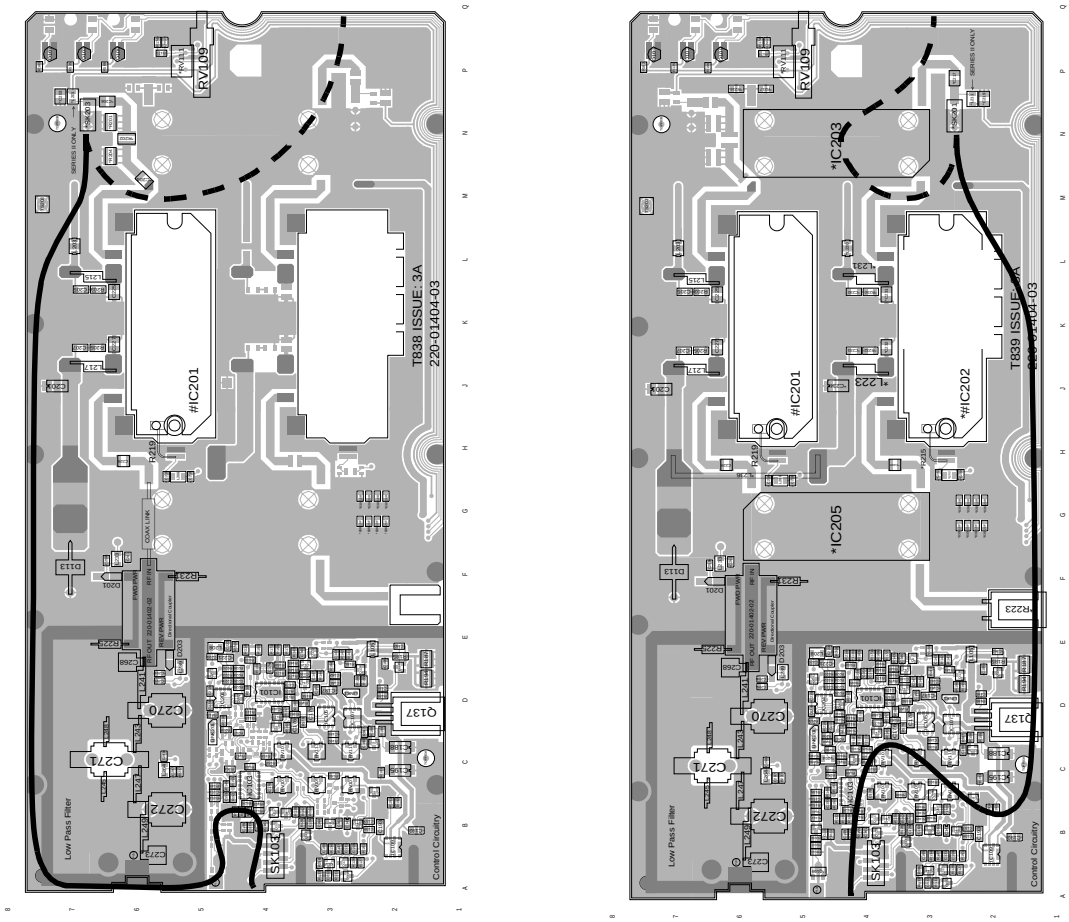

T838 **T839**

Rear RF input coax

Front RF input coax

Figure 3.2 T838/839 RF Input Coax Routing

Copyright TEL