T830 Series II Paging

Base Station Equipment

148-174MHz

Initial Adjustment Manual

July 2000

M830P-00-1A0

Copyright TEL

T800 *II*

Head Office
New Zealand

Tait Electronics Ltd
558 Wairakei Road
P.O. Box 1645
Christchurch
New Zealand
Phone: 64 3 358-3399
Fax: 64 3 358-3636

Radio Systems Division

535 Wairakei Road
P.O. Box 1645
Christchurch
New Zealand
Phone: 64 3 358-3399
Fax: 64 3 358-2825

Australia

Tait Electronics (Aust) Pty Ltd
186 Granite Street
Geebung
Queensland 4034
P.O. Box 679
Virginia
Queensland 4014
Australia
Phone: 61 7 3865-7799
Toll Free: 1800 077-112
Fax: 61 7 3865-7990

Beijing

Tait Mobile Radio (HK) Ltd
Beijing Representative Office
Room 812, Tower A
Beijing Bright China
Chang An Building
No. 7 Jianguomennei Dai Jei
Dongcheng District
Beijing
China 100005

Canada

Tait Mobile Radio Inc.
Unit 5, 158 Anderson Avenue
Markham
Ontario L6E1A9
Canada
Phone: 1 905 472-1100
Toll Free: 1 800 890-8248
Fax: 1 905 472-5300

France

Tait France Sarl
2 Avenue de la Cristallerie
92 316 Sèvres, Cedex
France
Phone: 33 1 41 14-05-50
Fax: 33 1 41 14-05-55

Germany

Tait Mobilfunk GmbH
Willstätterstraße 50
D-90449 Nürnberg 60
Germany
Phone: 49 911 96 746-0
Fax: 49 911 96 746-79

Hong Kong

Tait Mobile Radio (HK) Ltd
Unit 2216, North Tower
Concordia Plaza
1, Science Museum Road
Tsim Sha Tsui East
Kowloon
Phone: 852 2369-3040
Fax: 852 2369-3009

New Zealand

Tait Communications Ltd
Unit 4, 75 Blenheim Road
P.O. Box 1185
Christchurch
Phone: 64 3 348-3301
Fax: 64 3 343-0558

Singapore

Tait Electronics (Far East) Pte Ltd
4 Leng Kee Road
SIS Building #05-11A
Singapore 159088
Phone: 65 471-2688
Fax: 65 479-7778

Taiwan

Tait Mobile (Taiwan) Ltd
1104, No. 142 Chung Hsiao E. Rd
Sec. 4
Taipei
Taiwan
Phone: 886 2 2731-1290
Fax: 886 2 2711-6351

Thailand

Tait Mobile Radio Ltd
14/1 Suwan Tower
Third Floor
Soi Saladaeng 1
North Sathorn Road
Bangrak
Bangkok 10500
Thailand
Phone: 662 267-6290
Fax: 662 267-6293

United Kingdom

Tait Europe Ltd
Ermine Business Park
Ermine Road
Huntingdon
Cambridgeshire PE18 6YA
United Kingdom
Phone: 44 1480-52255
Fax: 44 1480-411996

USA

Tait Electronics (USA) Inc.
9434 Old Katy Road
Suite 110
Houston
Texas 77055
USA
Phone: 1 713 984-8684
Toll Free: 1 800 222-1255
Fax: 1 713 468-6944

Internet

http://www.taitworld.com

 Copyright TEL

About This Manual

Scope

This manual contains general, technical, tuning and adjustment information on T830 Series II 50W and 100W paging base stations which comprise the following equipment:

50W base station	T837 paging exciter T838 50W power amplifier
100W base station	T837 paging exciter T839 100W power amplifier

PCB Information

PCB information is provided for all current issue PCBs, as well as all previous issue PCBs manufactured in production quantities, and is grouped according to PCB. Thus, you will find the parts list, grid reference index (if necessary), PCB layouts and circuit diagram(s) for each individual PCB grouped together.

Errors

If you find an error in this manual, or have a suggestion on how it might be improved, please do not hesitate to contact Customer Support, Tait Electronics Ltd, Christchurch, New Zealand (full contact details are on page 2).

Updating Equipment And Manuals

In the interests of improving performance, reliability or servicing, Tait Electronics Ltd reserve the right to update their equipment and/or manuals without prior notice.

Copyright

All information contained in this manual is the property of Tait Electronics Ltd. All rights are reserved. This manual may not, in whole or part, be copied, photocopied, reproduced, translated stored or reduced to any electronic medium or machine readable form without prior written permission from Tait Electronics Ltd.

Ordering Tait Service Manuals

You can order additional copies of this manual from your nearest Tait Dealer or Customer Service Organisation. When ordering, make sure you quote the correct Tait product code ("M" number). Note that only the latest issue of the manual will be available for order.

Table Of Contents

This manual is divided into eight parts as listed below, with each part being further sub-divided into sections. There is a detailed table of contents at the start of each part and/or section.

Part	Title
A	Introduction To Servicing
B	T835 Receiver - not used in this manual
C	T837 Paging Exciter
D	T838 & T839 Power Amplifiers
E	T830 VCO PCB Information
F	Installation
G	T800-28-0X00 Paging Rack Frame
H	T800 Ancillary Equipment

 Copyright TEL

Part A Introduction To Servicing

This part of the manual is divided into the sections listed below. These sections provide some general and advisory information on servicing procedures, and a brief history of PGM800Win programming software.

Section	Title	Page
1	**General**	**1.1**
1.1	Additional Technical Information	1.1
1.2	Caution: CMOS Devices	1.1
1.3	Caution: Aerial Load	1.2
1.4	Caution: Beryllium Oxide & Power Transistors	1.2
2	**Mechanical**	**2.1**
2.1	Torx Recess Head Screws	2.1
2.2	Pozidriv & Philips Recess Head Screws	2.2
2.3	Disassembly/Reassembly	2.3
2.3.1	Exciters	2.3
2.3.2	Power Amplifiers	2.3
2.4	Cover Screw Torques	2.3
2.5	Chassis & Cover Compatibility	2.4
3	**Component Replacement**	**3.1**
3.1	Leaded Components	3.1
3.1.1	Desoldering Iron Method	3.1
3.1.2	Component Cutting Method	3.1
3.2	Surface Mount Devices	3.2
3.3	Cased Mica Capacitors	3.2
4	**Software History**	**4.1**
4.1	PGM800Win V1.0	4.1
4.2	PGM800Win V2.00	4.1

Figure	Title	Page
1.1	Typical Product Code & Serial Number Labels	1.1
1.2	Typical Anti-static Bench Set-up	1.2
2.1	Torx Screw Identification	2.1
2.2	Pozidriv & Philips Screw & Screwdriver Identification	2.2
2.3	Identification Of New-Design Chassis & Covers	2.4

Copyright TEL

1 General

1.1 Additional Technical Information

If you have any questions about this manual or the equipment it describes, please contact your nearest Tait Dealer or Customer Service Organisation. If necessary, you can get additional technical help from Customer Support, Tait Electronics Ltd, Christchurch, New Zealand (full contact details are on page 2).

When requesting information, please quote either the manual product code (e.g. M830P-00-1TA), or the equipment product code and serial number which are printed on a label on the back of the product (as shown in Figure 1.1).

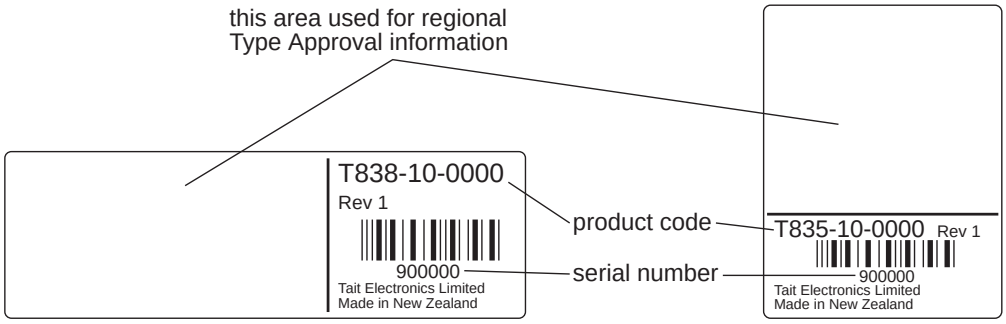

Figure 1.1 Typical Product Code & Serial Number Labels

If you require information about a particular PCB, please quote the full PCB internal part number (IPN) which is screen printed onto the top side of the board (refer to the appropriate PCB Information section in this manual for more details).

1.2 Caution: CMOS Devices

This equipment contains CMOS Devices which are susceptible to damage from static charges. Care when handling these devices is essential. For correct handling procedures refer to the manufacturers' data books, e.g. Philips data books covering CMOS devices, or Motorola CMOS data books, Section 5 'Handling', etc.

An anti-static bench kit (refer to Figure 1.2) is available from Tait Electronics Ltd under the following product codes:

- KS0001 - 1 conductive rubber bench mat
  - 1 earth lead to connect the mat to ground
- KS0004 - 1 wrist strap.

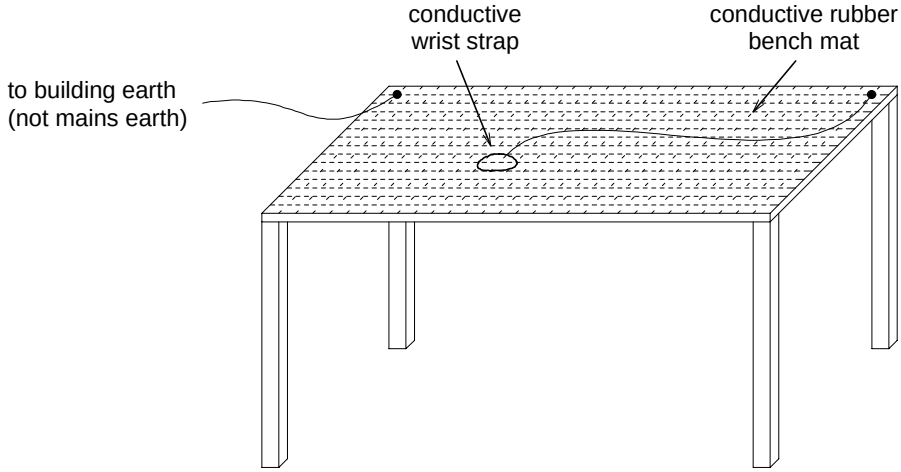

Figure 1.2 Typical Anti-static Bench Set-up

1.3 Caution: Aerial Load

The equipment has been designed to operate safely under a wide range of aerial loading conditions. However, we strongly recommend that the transmitter should always be operated with a suitable load to prevent damage to the transmitter output power stage.

1.4 Caution: Beryllium Oxide & Power Transistors

The RF power transistors in current use all contain some beryllium oxide. This substance, while perfectly harmless in its normal solid form, can become a severe health hazard when it has been reduced to dust. For this reason the RF power transistors should not be broken open, mutilated, filed, machined, or physically damaged in any way that can produce dust particles.

 Copyright TEL

2 Mechanical

2.1 Torx Recess Head Screws

Torx recess head screws are becoming the standard screw head type in all T800 Series II equipment, with Pozidriv and Philips recess head screws being used in fewer applications.

The Torx recess head has the advantage of improved screwdriver tip location, reducing the chances of screw head damage caused by the driver tip rotating within the recess. In addition, using a ball-tip Torx screwdriver allows you to drive a Torx head screw with the driver on a slight angle, which can be useful in situations where access is restricted.

It is important that you use the correct Torx screwdriver tip:

M3 screws - T10
M4 screws - T20.

Figure 2.1 below shows a typical Torx recess head screw (actual hardware may differ slightly from this illustration due to variations in manufacturing techniques).

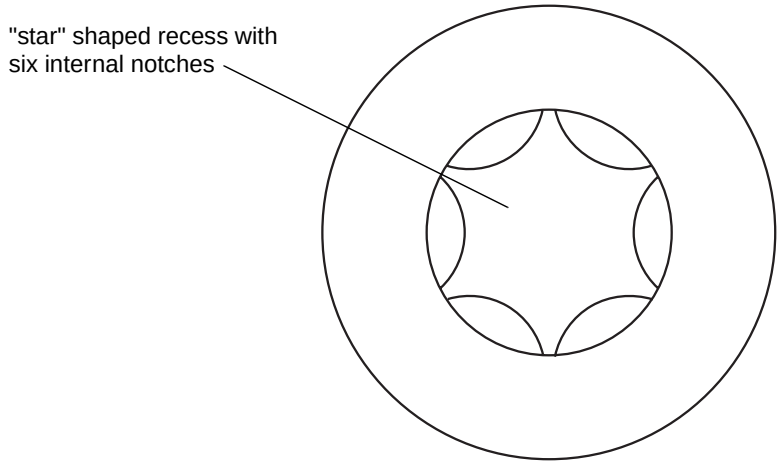

Figure 2.1 Torx Screw Identification

2.2 Pozidriv & Philips Recess Head Screws

Pozidriv and Philips recess head screws will continue to be used in T800 Series II equipment in a few special applications. It is important that you use the correct type and size screwdriver for each screw type to avoid damaging the screw head.

It is particularly important that you do not use Philips screwdrivers on Pozidriv screw heads as the tapered driving flutes of the Philips screwdriver do not engage correctly with the parallel-sided slots in the Pozidriv screw head. This can result in considerable damage to the screw head if the screwdriver tip turns inside the recess.

Note: If you find you need excessive downwards pressure to keep the screwdriver tip in the Pozidriv screw head, you are probably using the wrong type and/or size screwdriver.

Figure 2.2 below shows the main differences between typical Pozidriv and Philips screw heads and screwdriver tips (actual hardware may differ slightly from these illustrations due to variations in manufacturing techniques).

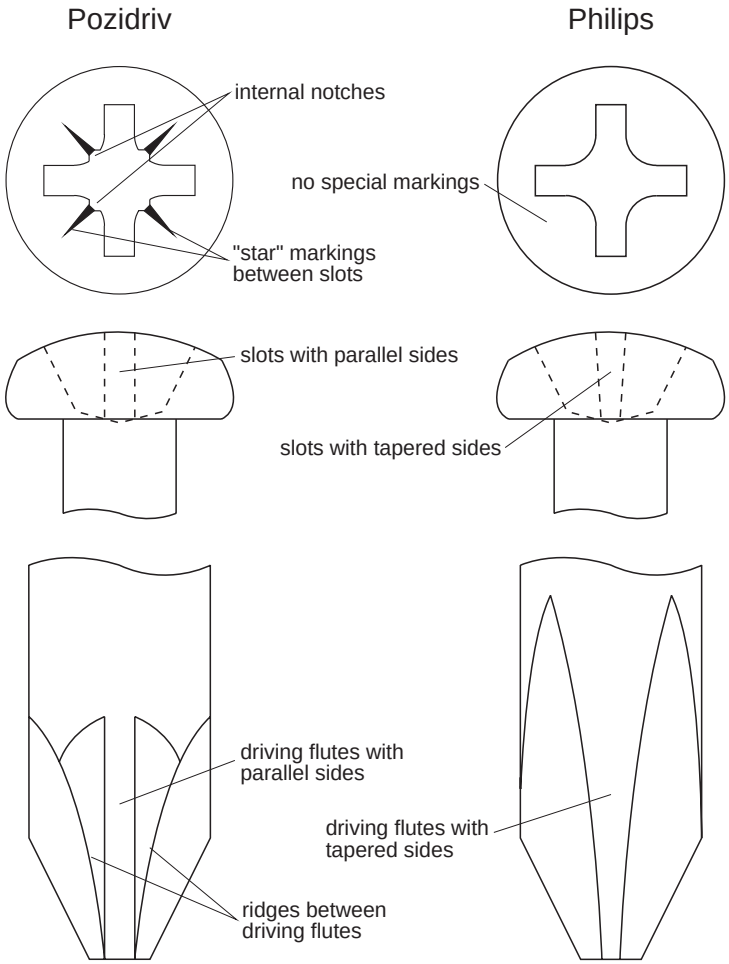

Figure 2.2 Pozidriv & Philips Screw & Screwdriver Identification

 Copyright TEL

2.3 Disassembly/Reassembly

2.3.1 Exciters

To carry out alignment or change option links, you need to remove only the top cover, i.e. the one adjacent to the front panel handle and on the opposite side to the main D-range connector (D-range 1/PL100).

You need to remove the bottom cover to access:

- Q370
- solder link SL501 (fast key option).

2.3.2 Power Amplifiers

You should carry out the tuning and power output level setting procedures with the cover on.

2.4 Cover Screw Torques

Exciters	..	1.36Nm/12in.lbf.
Power Amplifiers	..	0.9Nm/in.lbf.

2.5 Chassis & Cover Compatibility

The chassis and covers used in T800 Series II modules incorporate a number of design changes to improve Electro-Magnetic Compatibility (EMC) performance. It is important that only the new-design covers are fitted to the new chassis to ensure correct mechanical fit and continued compliance with appropriate EMC Type Approval regulations.

Figure 2.3 below shows some of the main features which can be used to identify the new-design chassis and covers.

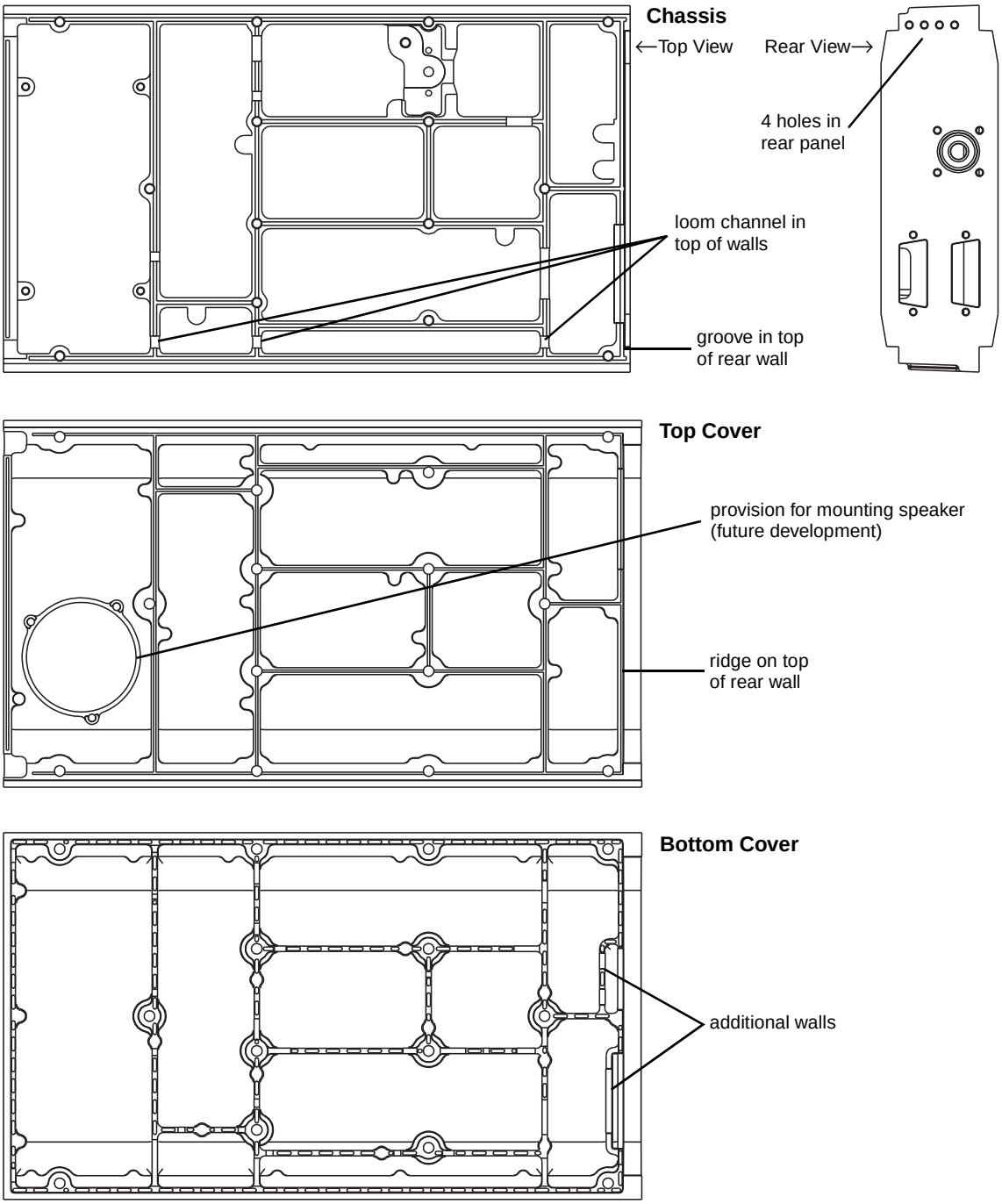

Figure 2.3 Identification Of New-Design Chassis & Covers

 Copyright TEL

3 Component Replacement

3.1 Leaded Components

Whenever you are doing any work on the PCB that involves removing or fitting components, you must take care not to damage the copper tracks. The two satisfactory methods of removing components from plated-through hole (PTH) PCBs are detailed below.

Note: The first method requires the use of a desoldering station, e.g. Philips SBC 314 or Pace MBT-100E.

3.1.1 Desoldering Iron Method

Place the tip over the lead and, as the solder starts to melt, move the tip in a circular motion.

Start the suction and continue the movement until 3 or 4 circles have been completed.

Remove the tip while continuing suction to ensure that all solder is removed from the joint, then stop the suction.

Before pulling the lead out, ensure it is not stuck to the plating.

If the lead is still not free, resolder the joint and try again.

Note: The desoldering iron does not usually have enough heat to desolder leads from the ground plane. Additional heat may be applied by holding a soldering iron on the tip of the desoldering iron (this may require some additional help).

3.1.2 Component Cutting Method

Cut the leads on the component side of the PCB.

Heat the solder joint ***sufficiently*** to allow ***easy*** removal of the lead by drawing it out from the component side: do ***not*** use undue force.

Fill the hole with solder and then clear with solderwick.

3.2 Surface Mount Devices

Caution: **Surface mount devices (SMDs) require special storage, handling, removal and replacement techniques. This equipment should be serviced only by an approved Tait Dealer or Customer Service Organisation equipped with the necessary facilities. Repairs attempted with incorrect equipment or by untrained personnel may result in permanent damage. If in doubt, contact your nearest Tait Dealer or Customer Service Organisation.**

3.3 Cased Mica Capacitors

Cased mica capacitors can be removed by heating the top with a heavy-duty soldering iron and gently lifting the capacitor off the PCB with a solder-resistant spike or equivalent.

 Copyright TEL

4 Software History

28/06/96	PGM800Win Version 1.0
18/08/97	PGM800Win Version 2.00

4.1 PGM800Win V1.0

PGM800Win V1.0 is different in concept from DOS versions of PGM800 in that it is Windows[1] based. It also includes many new and improved features over DOS versions of PGM800.

The major changes are outlined below:

- The Windows™ environment makes data entry and editing significantly easier.
- PGM800Win includes several new radio models which are not programmable with DOS versions of PGM800.
- Out of range frequencies will result in warning messages and will not be accepted for entry into the standard library module. User defined modules can be created, however, allowing variation from the standard library module.
- Channel numbers default to 0-127 to match the EPROM memory locations. However, the user can change this setting so that the channel numbers run from 1-128 to suit his/her particular needs.

Note: The data files produced by BASEPROG V1.0 and all DOS versions of PGM800 are still compatible with PGM800Win V1.0.

4.2 PGM800Win V2.00

PGM800Win V2.00 is an upgraded and expanded version of PGM800Win V1.0. It has been developed specifically for T800 Series II base stations, but retains the ability to program Series I equipment.

The major changes are outlined below:

- PGM800Win V2.0 will program T800 Series II base station modules via serial communications.
- Deviation and reference modulation settings are written automatically to the radio.

1. Windows is a registered trademark of the Microsoft Corporation.

- Extra information that is not stored in the radio (but which is still relevant to the radio) can be saved to a file on disk (e.g. note field, auxiliary pin names, etc.).

Note: The data files produced by BASEPROG V1.0, all DOS versions of PGM800, and PGM800Win V1.0 are still compatible with PGM800Win V2.00.

 Copyright TEL

Part B T835 Receiver

The T835 receiver is not covered in this manual. Refer to M830-00-201 (or later issue) for servicing information on the T835.

Copyright TEL

Part C T837 Paging Exciter

This part of the manual is divided into six sections, as listed below. There is a detailed table of contents at the start of each section.

Section	Title
1	General Information
2	Circuit Operation
3	Initial Tuning & Adjustment
4	Functional Testing
5	Fault Finding
6	PCB Information

Copyright TEL

1 T837 General Information

This section provides a brief description of the T837 paging exciter, along with detailed specifications and a list of types available.

The following topics are covered in this section.

Section	Title	Page
1.1	**Introduction**	**1.5**
1.2	**Specifications**	**1.6**
1.2.1	Introduction	1.6
1.2.2	General	1.6
1.2.3	RF Section	1.7
1.2.4	Low Speed Paging Modulator	1.8
1.2.5	Microcontroller	1.8
1.2.6	Test Standards	1.8
1.2.6.1	European Telecommunication Standard	1.8
1.2.6.2	Telecommunications Industry Association	1.8
1.2.6.3	Chinese Radio Regulatory Commission	1.9
1.3	**Product Codes**	**1.10**
1.5	**T837 Paging Product Range**	**1.11**

Figure	Title	Page
1.1	T837 Main Circuit Block Identification	1.4
1.2	T837 Front Panel Controls	1.4

Copyright TEL

replace A4 pages C1.3/C1.4 with A3 pages C1.3/C1.4

replace A4 pages C1.3/C1.4 with A3 pages C1.3/C1.4

Copyright TEL

1.1 Introduction

The T837 is a synthesised, microprocessor controlled, DFSK low speed paging exciter designed for single or multichannel[1] operation in the 148 to 174MHz frequency range[2]. With a standard power output of only 800mW, the exciter is designed for use with the T839 100W power amplifier. The RF section of the exciter comprises a frequency synthesiser which provides 170mW of frequency modulated RF drive to a two stage, wide band output amplifier. The synthesiser frequency is programmed via the serial communications port.

The low speed paging modulator section provides DFSK modulation. It incorporates a TCXO frequency reference and uses two point modulation to achieve modulation of data rates from 2400bps down to DC.

All components except those of the VCO are mounted on a single PCB. This is secured to a die-cast chassis which is divided into compartments to individually shield each section of circuitry. Access to both sides of the main circuit board is obtained by removing each of the chassis lids. There is provision within the chassis to mount small option PCBs.

The front panel has two indicator LEDs to show when the transmit carrier is on (red) and when the DC supply is connected (green). The T837 is 60mm wide and occupies a single space in a Tait rack frame, which has the ability to accommodate up to seven standard modules.

1. Although you can program the microcontroller with up to 128 channels, you must carry out the modulation adjustment procedure if you change frequency (see Section 3.5).
2. Although capable of operating over the 148-174MHz frequency range, the T837 has an 8MHz VCO switching range (see Section 1.2.3 and Section 3.1).

1.2 Specifications

1.2.1 Introduction

The performance figures given are minimum figures, unless otherwise indicated, for equipment tuned with the maximum switching range and operating at standard room temperature (+22°C to +28°C) and standard test voltage (13.8V DC).

Where applicable, the test methods used to obtain the following performance figures are those described in the EIA and ETS specifications. However, there are several parameters for which performance according to the Chinese specification GB/T 15938 is given. Refer to Section 1.2.6 for details of test standards.

Details of test methods and the conditions which apply for Type Approval testing in all countries can be obtained from Tait Electronics Ltd.

1.2.2 General

Number Of Channels	..	128 (standard)[1]
Supply Voltage:		
Operating Voltage	..	10.8 to 16V DC
Standard Test Voltage	..	13.8V DC
Polarity	..	negative earth only
Polarity Protection	..	crowbar diode
Line Keying Supply (if required)	..	-50V DC
Supply Current:		
Transmit	..	<650mA
Standby - T837-2X-1020	..	<150mA
- T837-2X-1021	..	<200mA
Operating Temperature Range	..	-30°C to +60°C
Dimensions:		
Height	..	183mm
Width	..	60mm
Length	..	320mm
Weight	..	2.1kg
Time-Out Timer (optional)	..	0 to 5 minutes[2] adjustable in 10 second steps

1. Additional channels may be factory programmed. Contact your nearest Tait Dealer or Customer Service Organisation.
2. Adjustable from 0 to 10 minutes in PGM800Win version 2.12 and later.

 Copyright TEL

Tail Timer	..	0 to 5 seconds adjustable in 100ms[1] steps
Transmit Key Time:		
T837-20-102X	..	<100ms
T837-26-102X	..	<30ms
Transmit Lockout Timer	..	0 to 1 minute adjustable in 10 second steps

1.2.3 RF Section

Frequency Range	..	148-174MHz
Modulation Type	..	DFSK
Frequency Increment:		
T837-20-102X	..	5 or 6.25kHz
T837-26-102X	..	2.5 or 3.125kHz
VCO Switching Range	..	8MHz
Load Impedance	..	50 ohms
Frequency Stability:		
T837-2X-1020	..	±1.0ppm, -20°C to +70°C ±2.0ppm, -30°C to +70°C
T837-2X-1021	..	±1.5ppm, -30°C to +70°C
External Reference Frequency (T837-2X-1021)	..	100kHz to 25.6MHz in 100kHz steps
External Reference Amplitude	..	0 to +10dBm into 50Ω
Adjacent Channel Power (4.5kHz deviation)	..	-75dBc (ETS) -70dBc (GB/T 15938)
Transmitter Side Band Noise: (no modulation, 15kHz bandwidth)		
At ±25kHz	..	-95dBc
At ±1MHz	..	-105dBc
Radiated Spurious Emissions:		
Transmit	..	-36dBm to 1GHz -30dBm to 4GHz
Standby	..	-57dBm to 1GHz -47dBm to 4GHz

1. Adjustable in 20ms steps in PGM800Win version 2.12 and later.

Power Output	..	800mW ±200mW
Transmit Keying Noise	..	-70dBc (GB/T 15938)

1.2.4 Low Speed Paging Modulator

Accepted Protocols/Speeds:

T837-20-102X	..	POCSAG 512/1200 and FLEX 1600
T837-26-102X	..	POCSAG 512/1200/2400 and FLEX 1600

Input Data Levels	..	TTL

Data Rise Time (10% - 90%):

T837-20-102X	..	<150µs (GB/T 15938)
T837-26-102X	..	<115µs

1.2.5 Microcontroller

Auxiliary Ports:

Open Drain Type	..	capable of sinking 2.25mA via 2k2Ω
V_{ds} max.	..	5V

1.2.6 Test Standards

Where applicable, this equipment is tested in accordance with the following standards.

1.2.6.1 European Telecommunication Standard

ETS 300 113 March 1996

Radio equipment and systems; land mobile service; technical characteristics and test conditions for radio equipment intended for the transmission of data (and speech) and having an antenna connector.

1.2.6.2 Telecommunications Industry Association

ANSI/TIA/EIA-603-1992

Land mobile FM or PM communications equipment measurement and performance standards.

 Copyright TEL

1.2.6.3 Chinese Radio Regulatory Commission

GB/T 15938 - 1995

General specification for equipment of radio paging systems.

1.3 Product Codes

The three groups of digits in the T830 Series II product code provide information about the model, type and options fitted, according to the conventions described below.

The following explanation of T830 Series II product codes is not intended to suggest that any combination of features is necessarily available in any one product. Consult your nearest Tait Dealer or Customer Service Organisation for more information regarding the availability of specific models, types and options.

Model

The Model group indicates the basic function of the product, as follows:

T83X-XX-XXXX	T837 exciter T838 50W power amplifier T839 100W power amplifier

Type

The Type group uses two digits to indicate the basic RF configuration of the product.

The first digit in the Type group designates the frequency range:

T83X-**X**X-XXXX	'2' for 148-174MHz

The second digit in the Type group indicates the channel spacing:

T83X-X**X**-XXXX	'0' for wide bandwidth (25kHz) - standard '6' for wide bandwidth (25kHz) - USA

Options

T83X-XX-**XXXX**	The Options group uses four digits and/or letters to indicate any options that may be fitted to the product. This includes standard options and special options for specific customers. '0000' indicates a standard Tait product with no options fitted. The large number of options precludes listing them here.

 Copyright TEL

1.4 T837 Paging Product Range

The following table lists the range of T837 paging product types available at the time this manual was published. Consult your nearest Tait Dealer or Customer Service Organisation for more information.

Frequency Range (MHz)		148-174			
Deviation (kHz)		5			
Baud Rate (bps)		1200	1200	2400	2400
Frequency Increments (kHz)		5/6.25	5/6.25	2.5/3.125	2.5/3.125
TCXO	±1.0ppm -20°C to +70°C ±2.0ppm -30°C to +70°C	•		•	
	±1.5ppm -20°C to +70°C		•		•
Exciter Type: T837-		20-1020	20-1021	26-1020	26-1021

You can identify the exciter type by checking the product code printed on a label on the rear of the chassis (Figure 1.1 in Part A shows typical labels). You can further verify the exciter type by checking the placement of an SMD resistor in the table that is screen printed onto the PCB (refer to Section 6.1 for more details).

Copyright TEL

2 T837 Circuit Operation

This section provides a basic description of the circuit operation of the T837 paging exciter.

Note: Unless otherwise specified, the term "PGM800Win" used in this and following sections refers to version 2.00 and later of the software.

Refer to Section 6 where the parts lists, grid reference index and diagrams will provide detailed information on identifying and locating components and test points on the main PCB. The parts list and diagrams for the VCO PCB are in Part E.

The following topics are covered in this section.

Section	Title	Page
2.1	**Introduction**	**2.3**
2.2	**Microcontroller**	**2.4**
2.3	**Synthesised Local Oscillator**	**2.5**
2.3.1	Two Point Modulation	2.6
2.4	**VCO**	**2.7**
2.4.1	VCO Supply	2.7
2.5	**Low Speed Paging Modulator**	**2.8**
2.5.1	General	2.8
2.5.2	AFC/PLL Operation	2.8
2.5.3	Data Path	2.9
2.5.4	External Reference Frequency (T837-2X-1021 Only)	2.9
2.5.5	Keying Inputs	2.10
2.5.6	Paging Modulator Links	2.10
2.6	**Power Supply & Regulator Circuits**	**2.11**
2.7	**Transmit Timers**	**2.12**
2.8	**Exciter Drive Amplifier**	**2.13**

Figure	Title	Page
2.1	T837 High Level Block Diagram	2.3
2.2	T837 Microcontroller Block Diagram	2.4
2.3	T837 Synthesiser Block Diagram	2.5
2.4	T837 AFC Block Diagram	2.8
2.5	T837 Power Supply & Regulators Block Diagram	2.11
2.6	T837 Transmit Timers	2.12

 Copyright TEL

2.1 Introduction

The individual circuit blocks which make up the T837 are:

- synthesiser
- VCO
- paging modulator
- drive amplifier
- voltage regulators.

Each of these circuit blocks is set in its own shielded compartment, formed as an integral part of the main chassis.

The configuration of the circuit blocks may be seen on a functional level in Figure 2.1. Refer to the circuit diagrams in Section 6.2 for more detail.

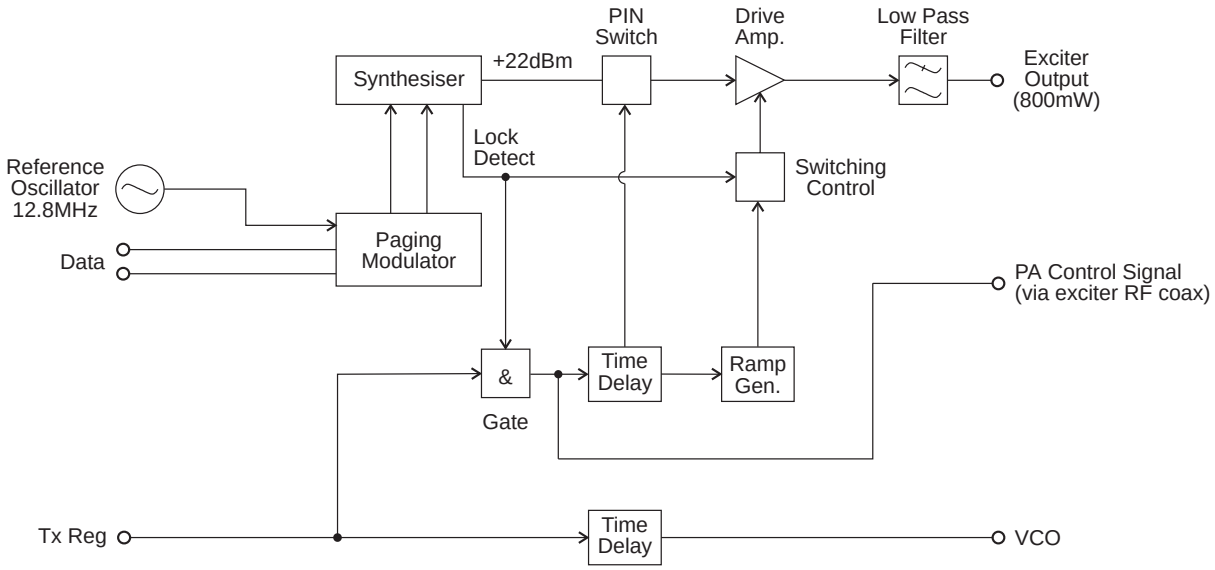

Figure 2.1 T837 High Level Block Diagram

2.2 Microcontroller

(Refer to the microcontroller circuit diagram (sheet 8) in Section 6.2.)

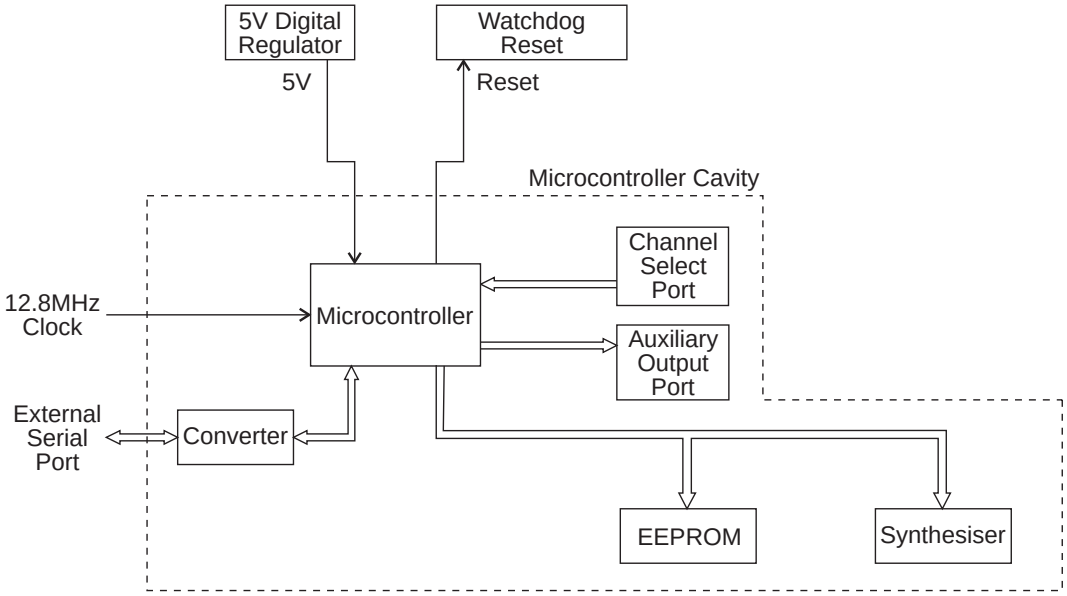

Figure 2.2 T837 Microcontroller Block Diagram

Overall system control of the T837 is accomplished by the use of a member of the 80C51 family of microcontrollers (IC810). It runs from internal ROM and RAM, thus leaving all four ports free for input/output functions.

Non-volatile data storage is achieved by serial communication with a 16kBit EEPROM (IC820). This serial bus is also used by the microcontroller to program the synthesiser (IC740).

The main tasks of the microcontroller are as follows:

- program the synthesiser;
- interface with the PGM800Win programming software at 9600 baud via the serial communication lines on D-range 1 (PL100);
- coordinate and implement timing control of the exciter;
- control the front panel "Supply" LED (refer to Section 5.3).

 Copyright TEL

2.3 Synthesised Local Oscillator

(Refer to the synthesiser circuit diagram (sheet 7) in Section 6.2 and the VCO circuit diagram in Part E.)

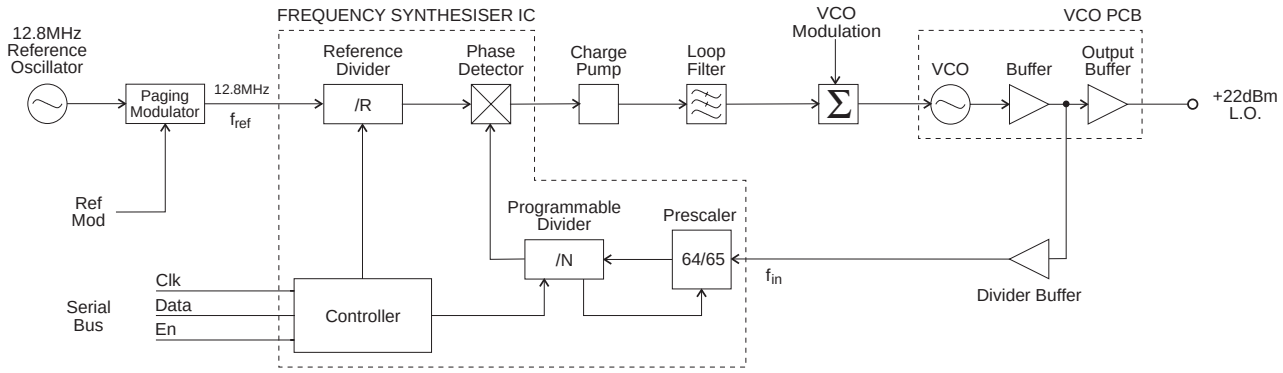

Figure 2.3 T837 Synthesiser Block Diagram

The synthesiser (IC740) employs a phase-locked loop (PLL) to lock a voltage controlled oscillator (VCO) to a given reference frequency. The synthesiser receives the divider information from the control microprocessor via a 3 wire serial bus (clock, data, enable). When the data has been latched in, the synthesiser processes the incoming signals from the VCO buffer (f_{in}) and the phase modulator (f_{ref}).

A 12.8MHz reference frequency is fed from the paging modulator section to the frequency synthesiser Ref_{in} (IC740 pin 20). This reference frequency is derived from the VCXO (X101), which is locked to the internal frequency standard provided by the TCXO (X100). The reference frequency has been modulated in the VCXO by the incoming data to allow the synthesiser loop to modulate down to DC. This 12.8MHz reference frequency is divided down to 6.25kHz or 5.0kHz in the synthesiser IC (IC740).

A buffered output of the VCO (Q795) is divided with a prescaler and programmable divider which is incorporated into the synthesiser chip (IC740). This signal is compared with the phase modulated reference signal at the phase detector (also part of the synthesiser chip). The phase detector outputs drive a balanced charge pump circuit (Q760, Q770, Q775, Q780, Q785) and active loop filter (IC750 pins 5, 6 & 7) which produces a DC voltage between 0V and 20V to tune the VCO. This VCO control line is further filtered to attenuate noise and other spurious signals. Note that the VCO frequency increases with increasing control voltage.

If the synthesiser loop loses lock, a pulsed signal appears at LD (pin 2) of IC740. This signal is filtered and buffered by IC750 pins 1, 2 & 3, producing the Lock-Detect signal used to shut off the power supply to the drive amplifier. IC750 pin 1 is at 20V when the synthesiser is out of lock.

2.3.1 Two Point Modulation

Frequency modulation occurs by modulating both the VCO input and the synthesiser reference input. This process is called two point modulation and ensures a flat modulation response from 0 to 2400bps.

The PLL has a fast response time, allowing a Tx key-up time of <30ms. Because of this fast response time the PLL sees lower modulation frequencies superimposed on the VCO as an error and corrects for it, resulting in no modulation on the carrier. At modulation frequencies greater than 300Hz the loop cannot correct fast enough and modulation is seen on the carrier.

To achieve low frequency modulation, the reference oscillator is also modulated so that the phase detector of IC740 detects no frequency error under modulation. Thus, the synthesiser loop will not attempt to correct for modulation and the data frequency response of the transmitter remains unaffected.

 Copyright TEL

2.4 VCO

(Refer to the VCO circuit diagram in Part E.)

The VCO transistor (Q1) operates in a common source configuration, with an LC tank circuit coupled between its gate and drain to provide the feedback necessary for oscillation. The VCO control voltage from the loop filter (IC750 pin 7) is applied to the varicaps (D1-D4) to facilitate tuning within an 8MHz band of frequencies. A trimcap (CV1) is used for coarse tuning of the VCO. The output from the oscillator circuit drives a cascode amplifier stage (Q2, Q3) which supplies +10dBm (typically) to a further stage of amplification, Q5. This is the final amplifier on the VCO PCB, and delivers +22dBm (typically) to the exciter drive amplifier.

A low level "sniff" is taken from the output of Q3 and used to drive the divider buffer (Q795) for the synthesiser (IC740).

The VCO operates at the actual output frequency of the exciter, i.e. there are no multiplier stages. The VCO is modulated by superimposing the data signal onto the control voltage and by frequency modulating the reference signal.

2.4.1 VCO Supply

The VCO is supplied from two switched +9V supplies under the control of the Tx-Reg. supply.

The VCO (Q1) and buffer amplifier (Q2 & Q3) are supplied from one +9V switched supply by Q540 via the capacitor multiplier (Q550, C550).

The output amplifier is supplied from the other +9V supply by Q520, Q530, and Q510.

A delay circuit holds the VCO on for a short time after the Tx-Reg. supply has been switched off. This is to allow the RF power circuits (both exciter and PA) to ramp down in the correct manner before the VCO is switched off.

2.5 Low Speed Paging Modulator

(Refer to the low speed paging modulator circuit diagram (sheet 2) in Section 6.2.)

2.5.1 General

The T837-2X-102X is a dedicated paging exciter. The low speed paging modulator section of the exciter accepts TTL data at the D-range input and modulates the synthesiser using a two point modulation method that provides modulation of data input frequencies of 2400bps down to DC (all 1's or all 0's).

The paging modulator section incorporates a TCXO frequency reference and a modulatable VCXO which is locked to the reference frequency from the TCXO.

The paging modulator also has provision for fitting an optional FFSK modem PCB.

2.5.2 AFC/PLL Operation

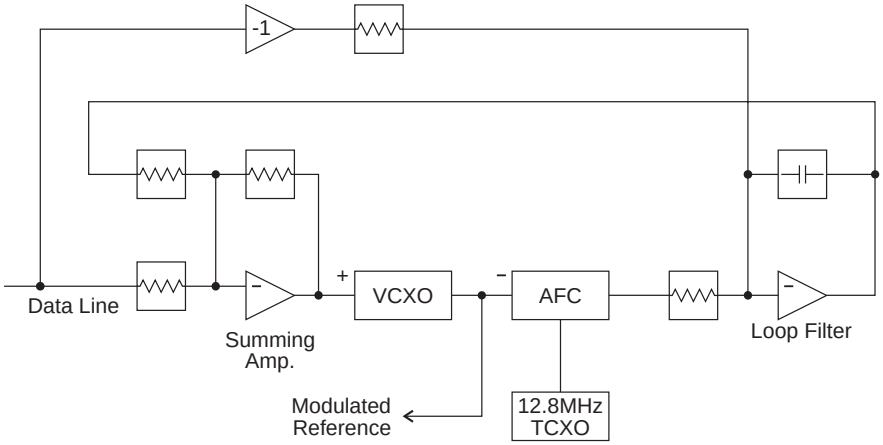

Figure 2.4 T837 AFC Block Diagram

The TCXO is the default frequency standard. In PLL mode, the slave 12.8MHz VCXO is phase locked to the TCXO. Both the TCXO and the VCXO outputs are clipped in IC100 and IC102 and then frequency divided by 4 in the twisted ring counters, IC105 (TCXO) and IC110 (VCXO). The slave VCXO is also fed to the synthesiser reference input.

Each twisted ring counter provides four divide-by-four outputs, the Q and not Q having the relative phases 0°, 90°, 180° and 270°. These two signals are combined in the two XOR gate phase discriminators in IC115 to provide two beat frequencies that are in phase quadrature. Both these outputs are filtered to pass the low frequency beat signal, which is a 5Vpp triangle wave.

The output from pin 8 of IC115 is then differentiated to provide a further 90° phase shifted square wave output on pin 14 of IC120. The amplitude of the output is proportional to the frequency difference between the TXCO and the VCXO. The square wave is then rectified by gating the signal with an inverted version of itself through a CMOS

 Copyright TEL

switch. The switch is controlled by a square wave derived from the triangle wave on pin 7 of IC120. This square wave will either be in-phase or inverted with respect to the output on pin 14 of IC120, depending on whether the VCXO frequency is higher or lower than the TCXO frequency.

The output from the CMOS switch (pin 14 of IC150) is a direct voltage which has amplitude and sense that is relative to the beat frequency. This signal is used as the control voltage for the VCXO. The rectified signal is then summed with an inverted version of the data, which cancels the effect of the data on the loop filter but still allows the VCXO to follow the TCXO frequency. Although the VCXO and TCXO are not on the same frequency when data is being applied, the VCXO frequency will not drift with respect to the TCXO.

2.5.3 Data Path

The input data enters the radio via pin 12 of D-range 1 (PL100). The data is fed into the paging modulator at I/O pad P101, which is buffered by Q100, and then through an XOR gate (IC115 pins 2 & 3) which gives the option of inverting the data.

IC140 pins 5 & 6 translate the level of the signal to 9Vpp, and then the data passes through an attenuator and data filter. The data path is switched at the output of the filter by IC150 pins 1, 2 & 15, which allows the data to be removed from the AFC loop for testing purposes.

From the switch the data travels three paths:

- The first path is via RV100 to the LOOP-MOD output to modulate the VCO.
- The second path is through RV101 to the summing amp. This data modulates the control line of the VCXO, which produces the modulated reference.
- The third data path, which originates at the switch, is the feedforward data path. The data is inverted, attenuated by RV102 and then summed with the output of the AFC. The effect of this data path is to stop the loop filter from correcting the VCXO frequency deviation caused by the data on the data line.

2.5.4 External Reference Frequency (T837-2X-1021 Only)

The paging modulator section of the T837-2X-1021 exciter incorporates an additional synthesiser (*IC200) which can be configured to provide a 12.8MHz reference frequency from an external frequency standard. This external frequency can be from 100kHz up to 25.6MHz in 100kHz steps.

When using an external reference, you must set the onboard synthesiser's reference frequency according to the frequency of the external reference. This is achieved by placing resistors *%R240 - *%R247 in a pattern corresponding to a binary number which represents the reference divider ratio (see Section 3.6).

The internal TCXO (%X100) is used as the standard reference frequency, but is phase-locked to the external frequency when this is applied.

When there is no external reference frequency present, *Q104 is turned off and *IC160 switches 2.5V DC to the AFC input of the internal TCXO. The reference frequency can be adjusted by the trimmer on the TCXO itself.

When an external reference frequency is present, *Q104 switches on and *IC160 switches the synthesiser phase detector output voltage to the AFC input of the internal TCXO. A buffered 12.8MHz output of the internal TCXO is fed back to the synthesiser oscillator input and compared with the external reference frequency, thus ensuring that the internal TCXO is phase-locked to the external reference frequency.

The synthesiser Lock-Detect signal drives an LED *D116 on the main PCB which is lit when the synthesiser is locked to the external reference frequency. The Lock-Detect signal is also fed to pin 8 of D-range 1 (PL100) for external monitoring purposes. The output is low when the synthesiser is locked.

2.5.5 Keying Inputs

There are two ways to key the exciter:

- pulling the Tx-Key line low (pin 13 on D-range 1 [PL100]) at the rear of the set);
- via the modem carrier detect line when the optional modem PCB is fitted.

Note: Link S100 must be connected when using the Tx-Key line input.

2.5.6 Paging Modulator Links

Three solder links are provided in the paging modulator circuit. Their functions are described in the following table:

Link	Function	Standard Setting	Description
S100	Tx-Key	linked	ties the Tx-Key line to +5V for earthed Tx-Key line operation
S101	invert data	not linked	inverts the incoming data
S102	invert key	not linked	inverts the key line (connected when using modem carrier detect)

 Copyright TEL

2.6 Power Supply & Regulator Circuits

(Refer to the regulators circuit diagram (sheet 6) in Section 6.2.)

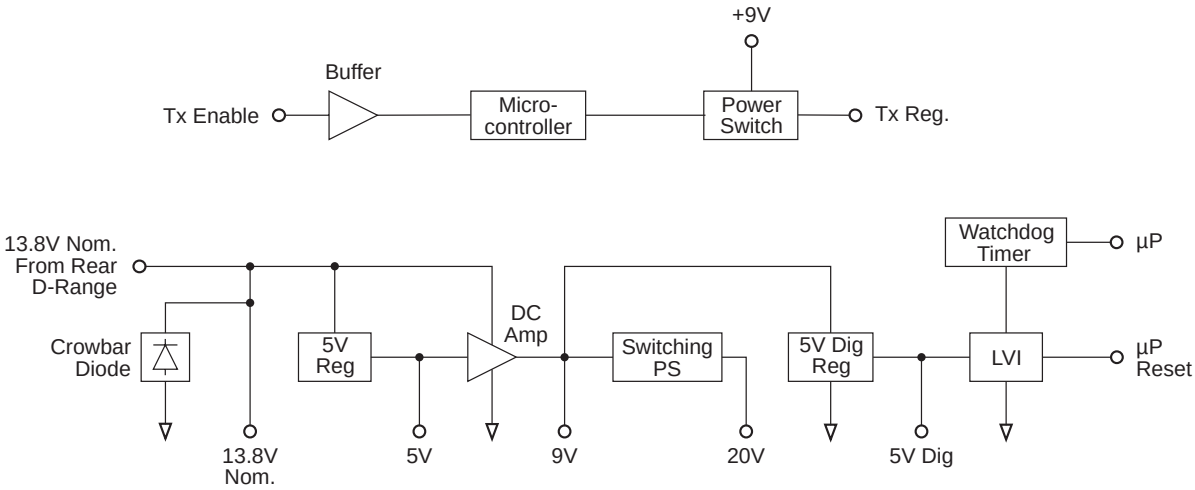

Figure 2.5 T837 Power Supply & Regulators Block Diagram

The T837 is designed to operate from a 10.8-16V DC supply (13.8V nominal). A 5.3V regulator (IC630) runs directly from the 13.8V rail, driving much of the synthesiser circuitry. It is also used as the reference for a DC amplifier (IC640, Q630, Q620) which provides a medium current capability 9V supply.

A switching power supply (Q660, Q670) runs from the 9V supply and provides a low current capability +20V supply. This is used to drive the synthesiser loop filter (IC750), giving a VCO control voltage range of up to 20V, and the Lock-Detect amplifiers.

Ultimate control of the transmitter is via the Tx-Reg. supply, switched from 9V by Q610. This is enabled via the Tx-Enable signal from the modulator, and microprocessor.

A crowbar diode is fitted for protection against connection to a power supply of incorrect polarity. It also provides transient overvoltage protection.

Note: A fuse must be fitted in the power supply line for the diode to provide effective protection.

2.7 Transmit Timers

The transmit tail timer, transmit timeout timer and transmit lockout timer can all be set from PGM800Win. The fields for setting these are found on the system information page. These three timers operate as follows (refer also to Figure 2.6):

Timer	Function	Adjustment
Transmit Tail	Sets the tail time during which the transmitter stays keyed after the external key source has been removed.	0-5 seconds in 100ms steps[a]
Transmit Timeout	Sets the maximum continuous transmission time. Once the timer has timed out, the transmitter must be keyed again, unless prevented by the transmit lockout timer.	0-300 seconds[b] in 10 second steps
Transmit Lockout	Sets the period of time that must elapse after a timeout before the transmitter can re-transmit. Once the timer has timed out, the transmitter can be keyed again.	0-60 seconds in 10 second steps

a. Adjustable in 20ms steps in PGM800Win version 2.12 and later.
b. Adjustable from 0 to 600 seconds in PGM800Win version 2.12 and later.

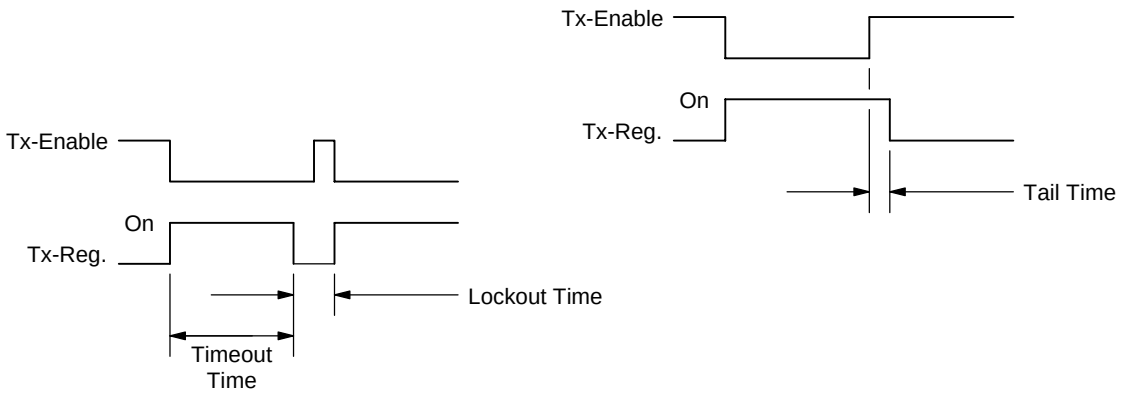

Figure 2.6 T837 Transmit Timers

 Copyright TEL

2.8 Exciter Drive Amplifier

(Refer to Figure 2.1 and the exciter circuit diagram (sheet 3) in Section 6.2.)

A two-stage, wide band amplifier (Q365, Q370) provides an output level of approximately 800mW (+29dBm) for an input of 170mW (+22dBm) from the VCO. IC330 pins 5, 6 & 7, Q310, and Q315 provide a 10.5V regulated supply for the exciter.

To reduce the spurious output level when the synthesiser is out-of-lock, the Tx-Reg. and Lock-Detect signals are gated to inhibit the exciter control circuit and to switch off the RF signal at the input to the drive amplifier. This is achieved by a PIN switch attenuator (D340, D350, D360).

Cyclic keying control is provided by additional circuitry consisting of several time delay, ramp and gate stages:

- Q305, IC330 pins 5, 6 & 7 — power ramping
- Q340, Q345 — Tx-Reg. and $\overline{\text{Lock-Detect}}$ gate
- Q320, Q325, Q330, Q335 — delay and PIN switch drive.

This is to allow the RF power circuits (both exciter and PA) to ramp up and down in a controlled manner so that minimal adjacent channel interference is generated during the transition.

R359, R342 and R344 form a 6dB attenuator to provide good VCO/drive amplifier isolation.

The output attenuator (R360, R362, R364, R366) assists in reducing exciter/PA interaction while also ensuring a good match for Q370.

Note: The exciter provides a DC control signal to the PA via the RF coax. This is injected via L390.

Copyright TEL

3 T837 Initial Tuning & Adjustment

Caution: **This equipment contains CMOS devices which are susceptible to damage from static charges. Refer to Section 1.2 in Part A for more information on anti-static procedures when handling these devices.**

The following section describes the full tuning and adjustment procedure and provides information on:

- channel programming
- synthesiser alignment
- modulator adjustment
- external reference frequency configuration (T837-2X-1021 only).

Note: Unless otherwise specified, the term "PGM800Win" used in this and following sections refers to version 2.00 and later of the software.

Refer to Section 6 where the parts lists, grid reference index and diagrams will provide detailed information on identifying and locating components and test points on the main PCB. The parts list and diagrams for the VCO PCB are in Part E.

Section	Title	Page
3.1	**Introduction**	**3.3**
3.2	**Channel Programming**	**3.3**
3.3	**Test Equipment Required**	**3.4**
3.4	**Synthesiser Alignment**	**3.5**
3.5	**Modulator Adjustment**	**3.6**
3.6	**External Reference Frequency Configuration (T837-2X-1021 Only)**	**3.7**

Figure	Title	Page
3.1	T837 Test Equipment Set-up	3.4
3.2	T837 100Hz VCO Control Line Wave Form	3.6

Copyright TEL

3.1 Introduction

When you receive your T837 exciter it will be run up and working on a particular frequency (the "default channel")[1]. If you want to switch to a frequency that is within the 8MHz VCO switching range (i.e. ±4MHz from the factory programmed frequency), you will need to:

- reprogram the exciter with the PGM800Win software (refer to the PGM800Win programming kit and Section 3.2 below);
- carry out the modulator adjustment procedure described in Section 3.5.

However, if you want to switch to a frequency outside the 8MHz VCO switching range, you will have to:

- reprogram the exciter with the PGM800Win software;
- carry out the synthesiser alignment procedure described in Section 3.4;
- carry out the modulator adjustment procedure described in Section 3.5.

3.2 Channel Programming

You can program up to 128 channel frequencies into the exciter's EEPROM memory (IC820) by using the PGM800Win software package and an IBM™ PC. You can also use PGM800Win to select the exciter's current operating frequency (or "default channel").

If the exciter is installed in a rack frame, you can program it via the programming port in the speaker panel. However, you can also program the exciter before it is installed in a rack frame as follows:

- by using a T800-01-0010 calibration test unit;
- via D-range 1.

If you do not use the T800-01-0010, you will have to connect the PC to the exciter via a module programming interface (such as the T800-01-0004).

For a full description of the channel programming procedure, refer to the PGM800Win programming software user's manual.

1. Use the "Read Module" function in PGM800Win to find out what the default channel is.

3.3 Test Equipment Required

You will need the following test equipment:

- computer with PGM800Win installed
- T800 programming kit
- module programming interface (e.g. T800-01-0004 - optional)
- 13.8V power supply
- digital multimeter
- function generator
- RF power meter
- frequency counter
- modulation meter

  } or modulation analyser
- oscilloscope (digital preferred)
- 20dB pad

Figure 3.1 shows a typical test equipment set-up.

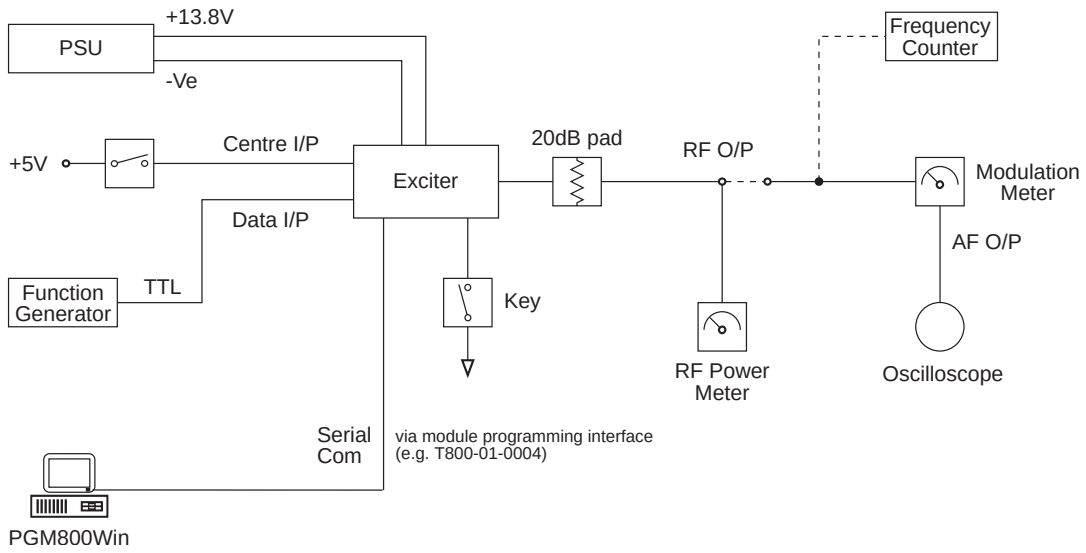

Figure 3.1 T837 Test Equipment Set-up

Note: Although the T800-01-0010 calibration test unit can be used to program the T837 paging exciter, it is not suitable for tuning and adjustment procedures because of the different pin allocations of D-range 1 (PL100).

 Copyright TEL

3.4 Synthesiser Alignment

Ensure that the T837 has been programmed with the required frequencies using PGM800Win software.

Select a channel using PGM800Win.

Connect a high impedance voltmeter to PL4-1 or the junction of L1 and R1 in the VCO (this measures the synthesiser loop voltage).

Key the transmitter by earthing the Tx-Key line.

Tune VCO trimmer CV1 for a synthesiser loop voltage of 9V.

Check that the exciter output power is 800mW ±200mW (measured at the rear panel N-type connector).

If required, measure and adjust the exciter output frequency as follows:

- apply +5V DC to pin 11 of D-range 1 (PL100) - this changes the mode of operation to PLL so that the carrier frequency can be observed - and measure the output frequency at the rear panel N-type connector;
- adjust the trimmer on the TCXO (%X100) if required;
- remove the +5V DC from pin 11.

Caution: **This trimmer is susceptible to physical damage. Do not exert a downward force of more than 500g (1lb) when adjusting.**

3.5 Modulator Adjustment

Apply +5V DC to pin 12 (DATA input) of D-range 1.

Monitor the exciter output frequency and adjust RV102 (DC frequency offset) to give an output frequency of $F_{carrier}$ + 4.5kHz.

Remove the +5V DC from pin 12 and apply a 100Hz 5Vp-p square wave to pin 12.

Monitor the signal at TP100 with an AC coupled oscilloscope set to 50mV/div. and adjust RV101 (reference modulation) until the triangle wave amplitude is minimised.

Change the frequency of the square wave to 600Hz.

Monitor the frequency deviation on the exciter output with a modulation meter and adjust RV100 (VCO modulation) to obtain ±4.5kHz deviation.

Monitor the VCO control line at PL4-1 or the junction of L1 and R1 in the VCO using an AC coupled oscilloscope set to at least 20mV/div.

Change the frequency of the square wave back to 100Hz and check that the control line still has a good trapezoidal wave form with flat top and bottom.

Note 1: You may have to readjust RV101 & RV100 alternately to achieve a square wave on the VCO control line at both 600Hz and 100Hz with a deviation of ±4.5kHz. Figure 3.2 shows a typical 100Hz VCO control line wave form with RV101 and RV100 set correctly.

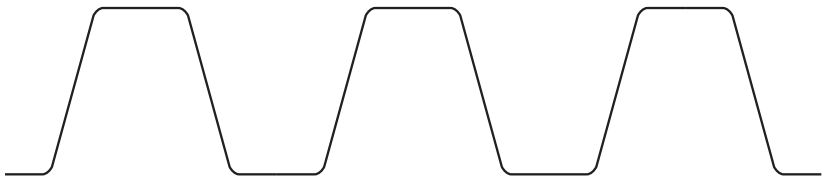

Figure 3.2 T837 100Hz VCO Control Line Wave Form

Note 2: If the lower cut off frequency of an AC coupled oscilloscope is too high, excessive distortion may be introduced which will result in 'sag' on the square wave displayed. Determine if this is a problem by directly monitoring the original square wave source and observe any sag. If there is sag, switch the oscilloscope to DC and use a 10µF capacitor in series with the oscilloscope probe (observing the correct polarity) to directly monitor the VCO control line. Note that the trace settling time will be approximately one minute.

 Copyright TEL

3.6 External Reference Frequency Configuration (T837-2X-1021 Only)

When using an external reference frequency, you must set the onboard synthesiser's reference frequency according to the frequency of the external reference. This is achieved by placing resistors *%R240 - *%R247 in a pattern corresponding to a binary number which represents the reference divider ratio.

If you are using a 10MHz external reference frequency, you need only carry out steps 4 and 5 in this section. You do not need to carry out steps 1, 2 and 3 because the T837 has already been configured at the factory for a 10MHz external reference.

However, if you are using an external reference frequency other than 10MHz, you must configure the internal synthesiser as described in steps 1, 2 and 3 before proceeding to steps 4 and 5.

1. Divide the external oscillator frequency by 100kHz.

2. Convert the result to binary. You can use the following table to do this: select the binary values in row three which add up to the result obtained in step 1, then place a "1" in these positions and a "0" in the others.

MSB							LSB
N7	N6	N5	N4	N3	N2	N1	N0
128_{10}	64_{10}	32_{10}	16_{10}	8_{10}	4_{10}	2_{10}	1_{10}
*%R240	*%R241	*%R242	*%R243	*%R244	*%R245	*%R246	*%R247

3. Where there is a "0" in the binary number, place a zero ohm resistor in the corresponding component location shown in the table. Where there is a "1", leave an open link.

Example: The following example shows the resistor pattern for a 10MHz external reference frequency is calculated.

$$\frac{10\text{MHz}}{100\text{kHz}} = 100$$

$$100 = 64 + 32 + 4$$

therefore place resistors *%R240, *%R243, *%R244, *%R246 and *%R247 and leave all other links open

MSB							LSB
N7	N6	N5	N4	N3	N2	N1	N0
128_{10}	64_{10}	32_{10}	16_{10}	8_{10}	4_{10}	2_{10}	1_{10}
0	1	1	0	0	1	0	0
*%R240	*%R241	*%R242	*%R243	*%R244	*%R245	*%R246	*%R247

4. Connect the external reference frequency at a level of 0dBm to +10dBm/50Ω into the external reference input and check that green LED *D116 lights.

5. Measure the TCXO (%X100) AFC voltage at %IC160 pin 4 with a high impedance voltmeter and adjust the TXCO trimmer (if necessary) to obtain 2.5V DC ±0.2V.

Copyright TEL

4 T837 Functional Testing

Caution: **This equipment contains CMOS devices which are susceptible to damage from static charges. Refer to Section 1.2 in Part A for more information on anti-static procedures when handling these devices.**

The following test procedures will confirm that the T837 has been tuned and adjusted correctly and is fully operational.

Note: Unless otherwise specified, the term "PGM800Win" used in this and following sections refers to version 2.00 and later of the software.

Refer to Figure 4.2 for the location of the main tuning and adjustment controls, and to Section 3.3 for the test equipment set-up. Refer also to Section 6 where the parts lists, grid reference index and diagrams will provide detailed information on identifying and locating components and test points on the main PCB. The parts list and diagrams for the VCO PCB are in Part E.

The following topics are covered in this section.

Section	Title	Page
4.1	**Current Consumption**	**4.3**
4.2	**Output Power**	**4.3**
4.3	**Output Frequency**	**4.3**
4.4	**External Reference Frequency (T837-2X-1021 Only)**	**4.3**
4.5	**Timers**	**4.4**

Figure	Title	Page
4.1	T837 Transmit Timers	4.4
4.2	T837 Main Tuning & Adjustment Controls	4.5

Copyright TEL

4.1 Current Consumption

Connect the T837 to a 13.8V power supply.

Connect an RF power meter to the T837 output socket.

Check that the current in the 13.8V power cable is less than:

T837-2X-1020 - 150mA
T837-2X-1021 - 200mA.

Key the T837 by earthing the Tx-Key line (the carrier "On" LED should light).

Check that the current is less than 650mA.

4.2 Output Power

Connect an RF power meter to the T837 output socket.

Key the T837 by earthing the Tx-Key line.

Check that the output power is 800mW ±200mW.

4.3 Output Frequency

Connect the T837 output to a frequency counter via a 20dB attenuator pad.

Apply +5V DC to pin 11 of D-range 1 (PL100) - this changes the mode of operation to PLL so that the carrier frequency can be observed - and measure the output frequency.

Adjust the TCXO (X100) (if required) to trim to the nominal frequency (±100Hz).

4.4 External Reference Frequency (T837-2X-1021 Only)

Connect the external reference frequency at a level of 0dBm to +10dBm/50Ω into the external reference input and check that green LED *D116 lights.

Note: Ensure that the onboard synthesiser's reference frequency has been set according to the frequency of the external reference (see Section 3.6).

Check the Lock-Detect signal level on pin 8 of D-range 1 (PL100) is as follows:

external reference frequency applied - 0V (approx.)
no external reference frequency applied - 4.5V (approx.).

4.5 Timers

The transmit tail timer, transmit timeout timer and transmit lockout timer can all be set from PGM800Win. The fields for setting these are found on the system information page. These three timers operate as follows (refer also to Figure 4.1):

Timer	Function	Adjustment
Transmit Tail	Sets the tail time during which the transmitter stays keyed after the external key source has been removed.	0-5 seconds in 100ms steps[a]
Transmit Timeout	Sets the maximum continuous transmission time. Once the timer has timed out, the transmitter must be keyed again, unless prevented by the transmit lockout timer.	0-300 seconds[b] in 10 second steps
Transmit Lockout	Sets the period of time that must elapse after a timeout before the transmitter can re-transmit. Once the timer has timed out, the transmitter can be keyed again.	0-60 seconds in 10 second steps

a. Adjustable in 20ms steps in PGM800Win version 2.12 and later.
b. Adjustable from 0 to 600 seconds in PGM800Win version 2.12 and later.

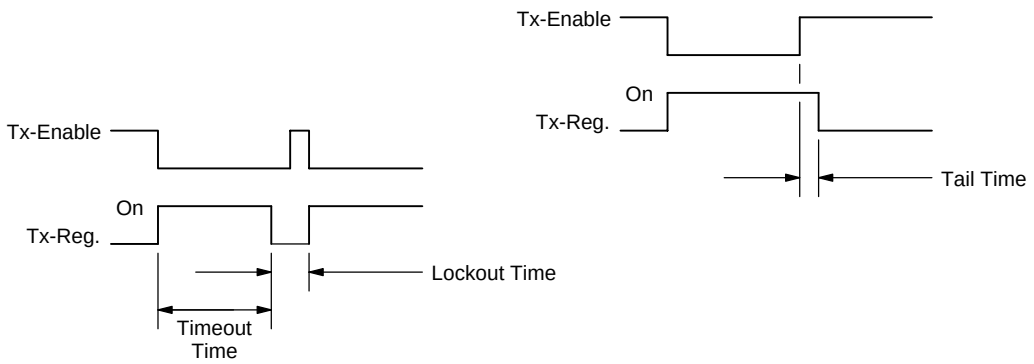

Figure 4.1 T837 Transmit Timers

 Copyright TEL

5 T837 Fault Finding

Caution: **This equipment contains CMOS devices which are susceptible to damage from static charges. Refer to Section 1.2 in Part A for more information on anti-static procedures when handling these devices.**

The following test procedures and fault finding flow charts may be used to help locate a hardware problem, however they are by no means a complete fault finding procedure. If you still cannot trace the fault after progressing through them in a logical manner, contact your nearest Tait Dealer or Customer Service Organisation. If necessary, you can get additional technical help from Customer Support, Radio Systems Division, Tait Electronics Ltd, Christchurch, New Zealand (full contact details are on page 2).

Note: Unless otherwise specified, the term "PGM800Win" used in this and following sections refers to version 2.00 and later of the software.

Refer to Section 6 where the parts lists, grid reference index and diagrams will provide detailed information on identifying and locating components and test points on the main PCB. The parts list and diagrams for the VCO PCB are in Part E.

The following topics are covered in this section:

Section	Title	Page
5.1	**Visual Checks**	**5.3**
5.2	**Component Checks**	**5.3**
5.3	**Front Panel LED Indicator**	**5.3**
5.4	**DC Checks**	**5.4**
5.4.1	Power Rails	5.4
5.4.2	VCO Locking	5.4
5.5	**RF Checks**	**5.5**
5.5.1	Output Power	5.5
5.6	**PGM800Win Generated Errors**	**5.6**
5.7	**Fault Finding Charts**	**5.7**
5.7.1	Microcontroller	5.7
5.7.1.1	Basic Checks	5.7
5.7.1.2	Serial Communications	5.8
5.7.2	Regulator	5.9
5.7.3	Synthesiser	5.10
5.7.4	Exciter Drive Amplifier	5.13

Figure	Title	Page
5.1	RF Diode Probe Circuit	5.5

 Copyright TEL

5.1 Visual Checks

Remove the covers from the T837 and inspect the PCB for damaged or broken components, paying particular attention to the surface mounted devices (SMD's).

Check for defective solder joints. If repair or replacement is considered necessary, refer to Section 3 of Part A.

5.2 Component Checks

If you suspect a transistor is faulty, you can assess its performance by measuring the forward and reverse resistance of the junctions. Unless the device is completely desoldered, first make sure that the transistor is not shunted by some circuit resistance. Use a good quality EVM (e.g. Fluke 75) for taking the measurements (or a 20k ohm/V or better multimeter, using only the medium or low resistance ranges).

The collector current drawn by multi-junction transistors is a further guide to their performance.

If an IC is suspect, the most reliable check is to measure the DC operating voltages. Due to the catastrophic nature of most IC failures, the pin voltages will usually be markedly different from the recommended values in the presence of a fault. The recommended values can be obtained from either the circuit diagram or the component data catalogue.

5.3 Front Panel LED Indicator

The green "Supply" LED on the T837 front panel will flash according to the conditions described in the following table:

Flash Rate	Condition
fast (⅓ sec. on/⅓ sec. off approx.)	T837 is linked with PGM800Win
unequal (⅓ sec. on/1 sec. off approx.)	microcontroller has detected an internal communications error - refer to Section 5.7.1

Where two or more conditions occur at the same time, the precedence is in the order shown above (i.e. T837 linked has the highest priority, followed by internal error).

5.4 DC Checks

5.4.1 Power Rails

Refer to the top side PCB layout diagram in Section 6 or Figure 4.2 for test point locations, and to the regulator fault finding chart (Section 5.7.2) for fault diagnosis.

Check the 13.8V (TP601) and 9V (TP602) supplies at their test points in the regulator compartment with a DMM.

Check the 5V (TP604) and 20V (TP603) rails at their respective test points in the regulator compartment.

Check that Tx-Reg. (TP310 in the paging modulator compartment) comes up to 8.8V when the exciter is keyed.

Check the +5V digital regulator output (TP607 in the regulator compartment).

Check for short circuits.

5.4.2 VCO Locking

Key the exciter.

Using a DMM, monitor the VCO control voltage at PL4-1 or the junction of L1 and R1 on the VCO PCB.

If the synthesiser is locked and the VCO aligned, the voltage at this point should be between 5 and 13V.

If the VCO is not locked, refer to the synthesiser fault finding chart (Section 5.7.3).

 Copyright TEL

5.5 RF Checks

In-circuit RF levels may be measured with an RF probe on which the earth lead has been shortened to a minimum (i.e. 13mm). Refer to the circuit diagrams for typical levels.

Figure 5.1 shows a suitable RF probe circuit.

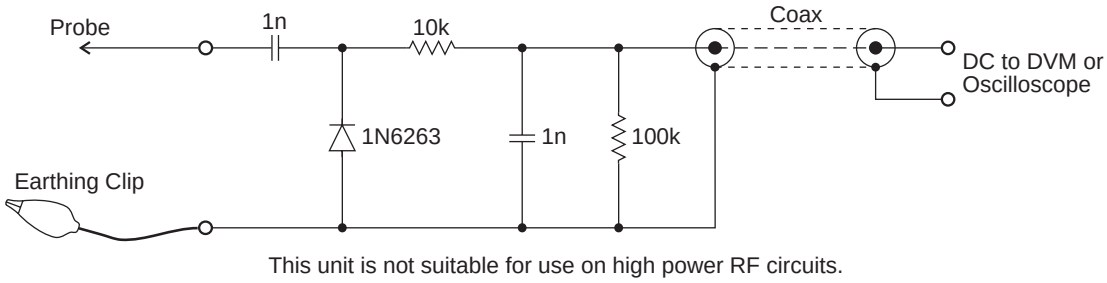

Figure 5.1 RF Diode Probe Circuit

5.5.1 Output Power

Refer to the exciter drive amplifier fault finding chart (Section 5.7.4).

Ensure that the VCO locks (refer to Section 5.4.2).

Connect the exciter output to a power meter and key the exciter.

Check that the output power is between 600 and 1000mW.

Note: If the synthesiser is out of lock, the lock detector (synthesiser IC740 and comparator IC750) will prevent the RF signal from reaching the PA by switching the supply to the exciter amplifier (Q340, Q345).

5.6 PGM800Win Generated Errors

The following errors are those most likely to occur using PGM800Win. Refer to the PGM800Win software user's manual for a complete list of error messages.

Channel Switch Set

The programmed default channel change was not accepted by the base station because a channel is selected externally. Try turning the external channel switch off to change the default channel in PGM800Win.

Synth Out Of Lock

The synthesiser received incorrect data, or the data was corrupted. Enter a frequency within the VCO switching range, or tune the VCO.

Internal Error

Data could not be read from the base station due to an internal error. Check for shorts or open circuits on the SDA, SCK, SYNTH and EPOT lines. The SDA, SCK and SYNTH are normally high.

Write/Read To An Unlinked Module

The link to the module does not exist. Undefined error.

 Copyright TEL

5.7 Fault Finding Charts

Note: The standard test point designations used in this section are as follows:

TP601	13.8V
TP602	9V
TP603	20V
TP604	5V

5.7.1 Microcontroller (IC810)

5.7.1.1 Basic Checks

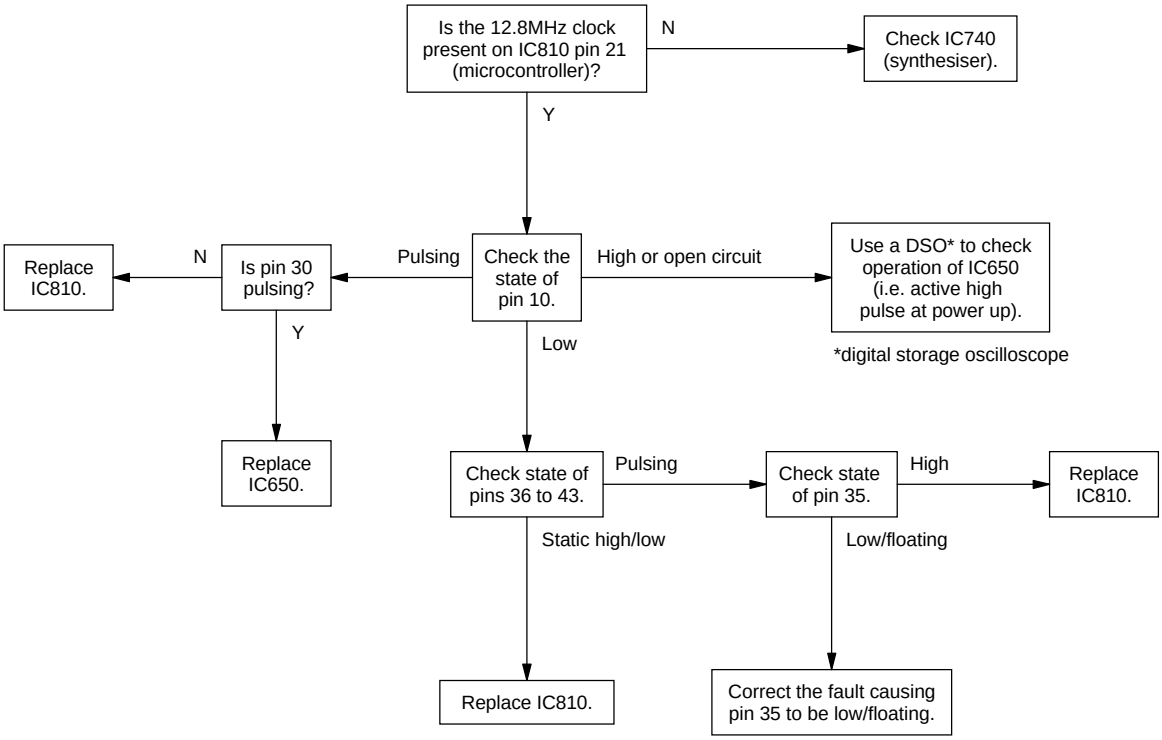

5.7.1.2 Serial Communication

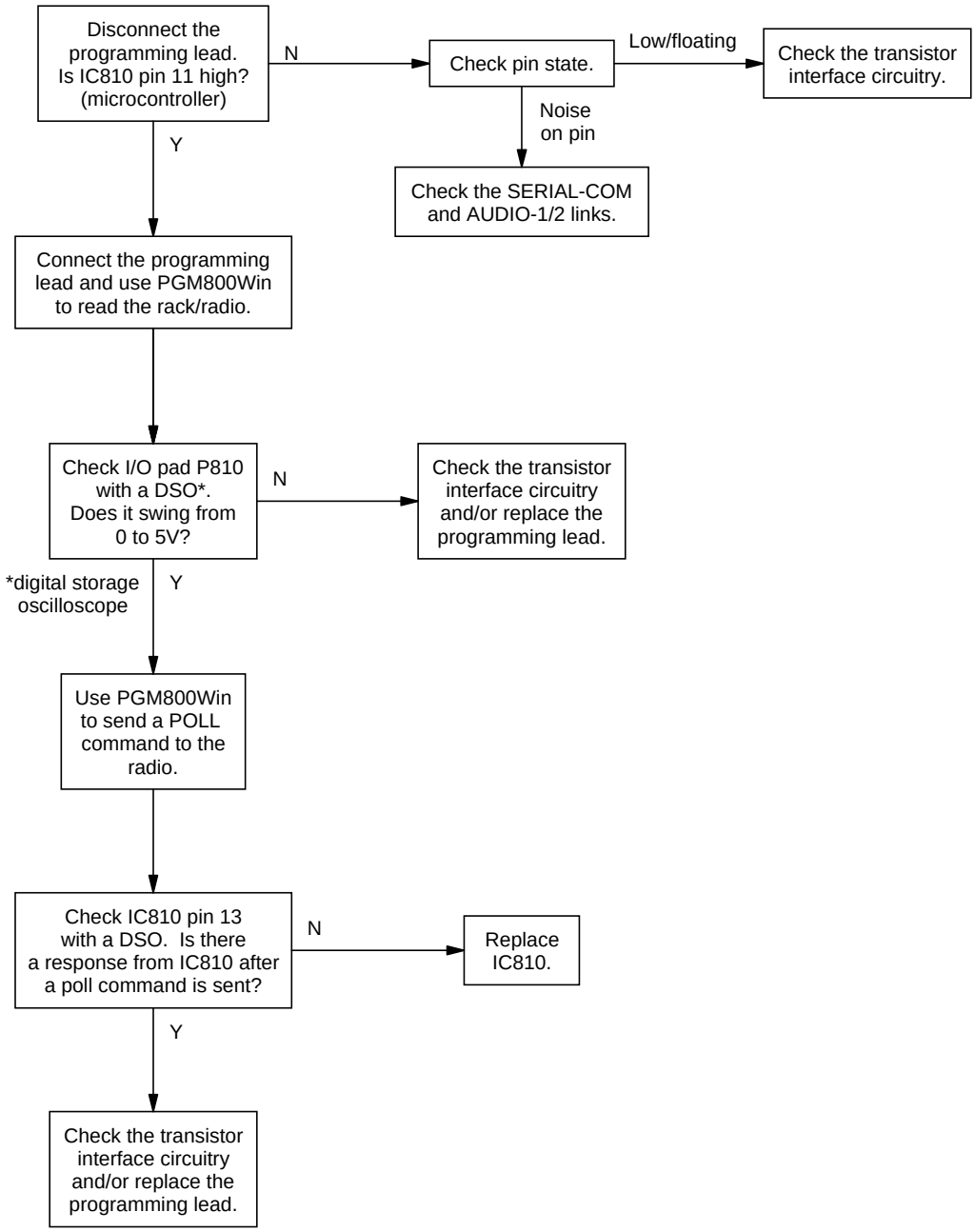

 Copyright TEL

5.7.2 Regulator

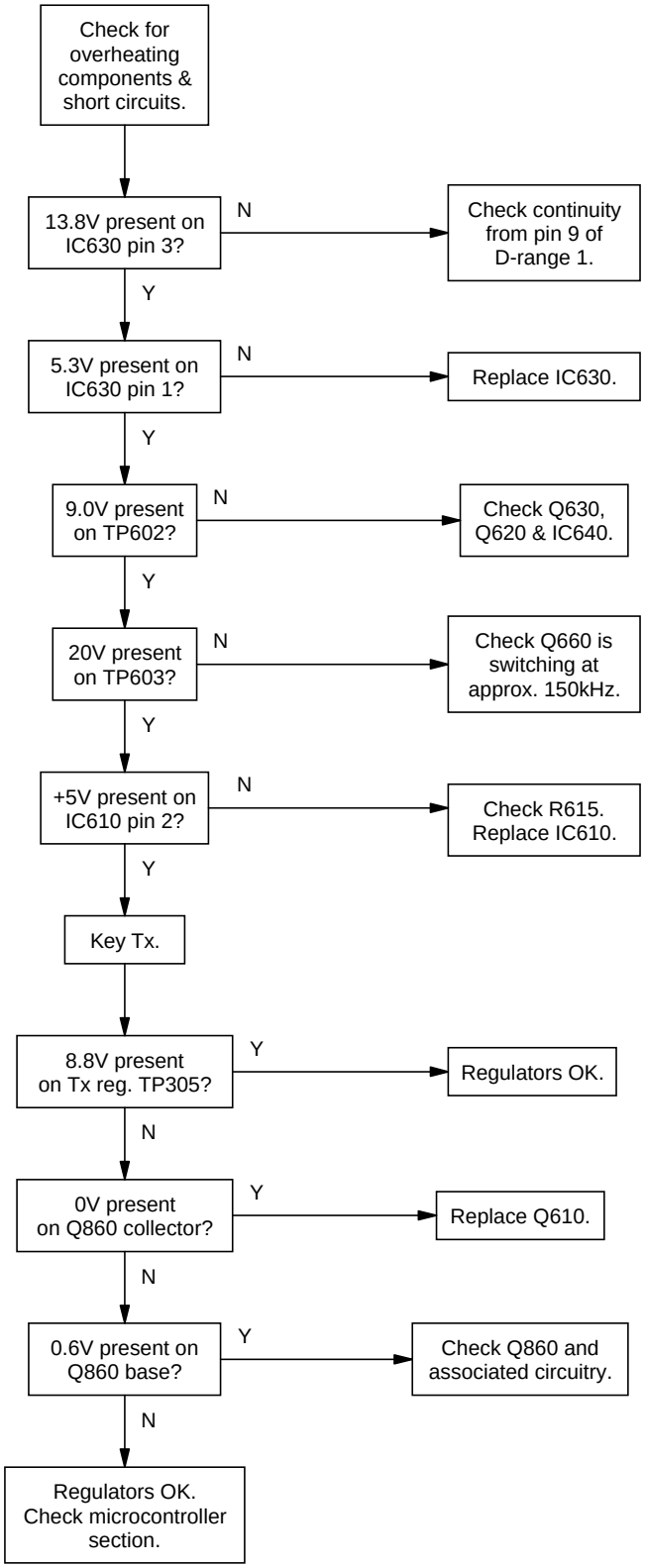

5.7.3 Synthesiser

Refer to the synthesiser circuit diagram (sheet 7) in Section 6 and the VCO circuit diagram in Part E.

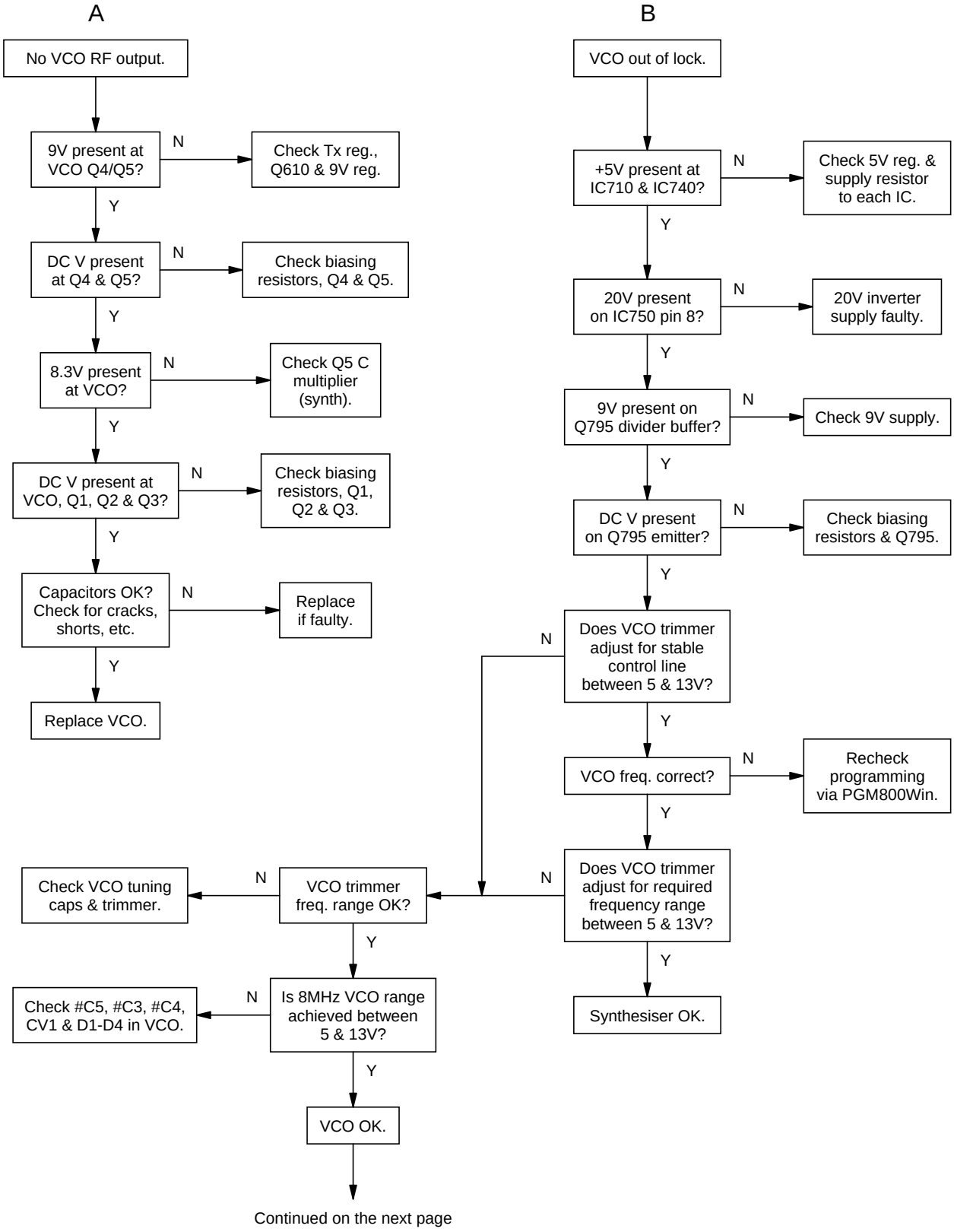

Continued on the next page

 Copyright TEL

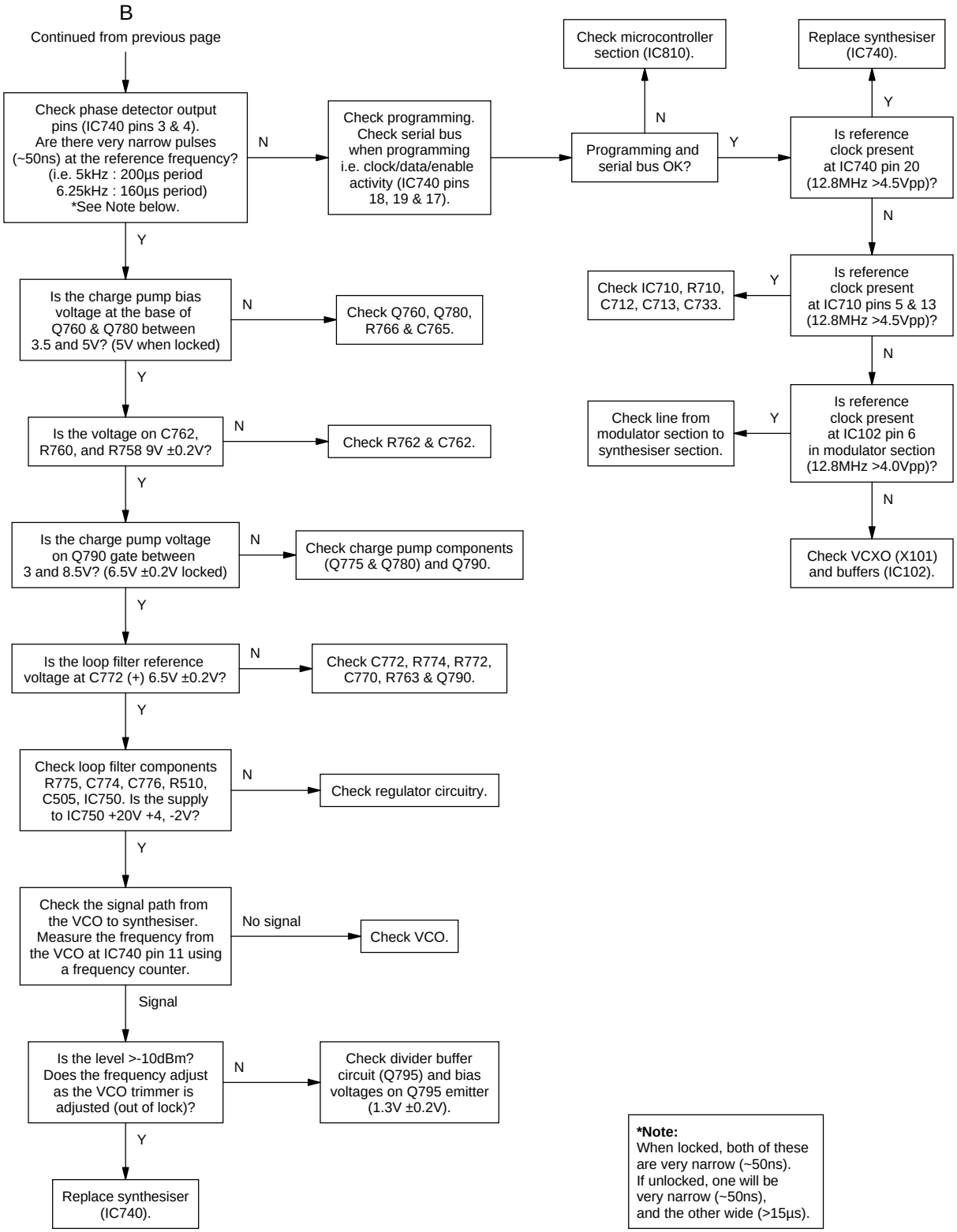
B
Continued from previous page
Check phase detector output pins (IC740 pins 3 & 4). Are there very narrow pulses (~50ns) at the reference frequency? (i.e. 5kHz : 200µs period 6.25kHz : 160µs period) *See Note below.
N
Check programming. Check serial bus when programming i.e. clock/data/enable activity (IC740 pins 18, 19 & 17).
Programming and serial bus OK?
N
Check microcontroller section (IC810).
Y
Replace synthesiser (IC740).
Y
Is reference clock present at IC740 pin 20 (12.8MHz >4.5Vpp)?
N
Is reference clock present at IC710 pins 5 & 13 (12.8MHz >4.5Vpp)?
Y
Check IC710, R710, C712, C713, C733.
N
Is reference clock present at IC102 pin 6 in modulator section (12.8MHz >4.0Vpp)?
Y
Check line from modulator section to synthesiser section.
N
Check VCXO (X101) and buffers (IC102).
Y
Is the charge pump bias voltage at the base of Q760 & Q780 between 3.5 and 5V? (5V when locked)
N
Check Q760, Q780, R766 & C765.
Y
Is the voltage on C762, R760, and R758 9V ±0.2V?
N
Check R762 & C762.
Y
Is the charge pump voltage on Q790 gate between 3 and 8.5V? (6.5V ±0.2V locked)
N
Check charge pump components (Q775 & Q780) and Q790.
Y
Is the loop filter reference voltage at C772 (+) 6.5V ±0.2V?
N
Check C772, R774, R772, C770, R763 & Q790.
Y
Check loop filter components R775, C774, C776, R510, C505, IC750. Is the supply to IC750 +20V +4, -2V?
N
Check regulator circuitry.
Y
Check the signal path from the VCO to synthesiser. Measure the frequency from the VCO at IC740 pin 11 using a frequency counter.
No signal
Check VCO.
Signal
Is the level >-10dBm? Does the frequency adjust as the VCO trimmer is adjusted (out of lock)?
N
Check divider buffer circuit (Q795) and bias voltages on Q795 emitter (1.3V ±0.2V).
Y
Replace synthesiser (IC740).
*Note:
When locked, both of these are very narrow (~50ns).
If unlocked, one will be very narrow (~50ns), and the other wide (>15µs).

C

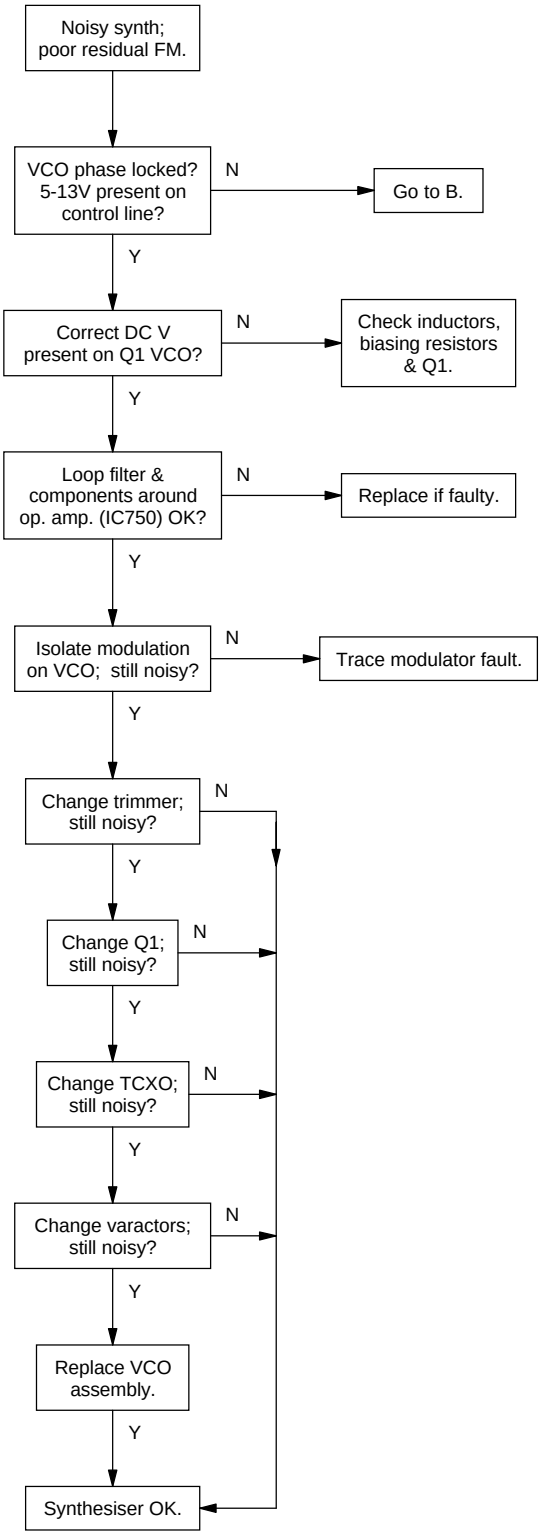

 Copyright TEL

5.7.4 Exciter Drive Amplifier

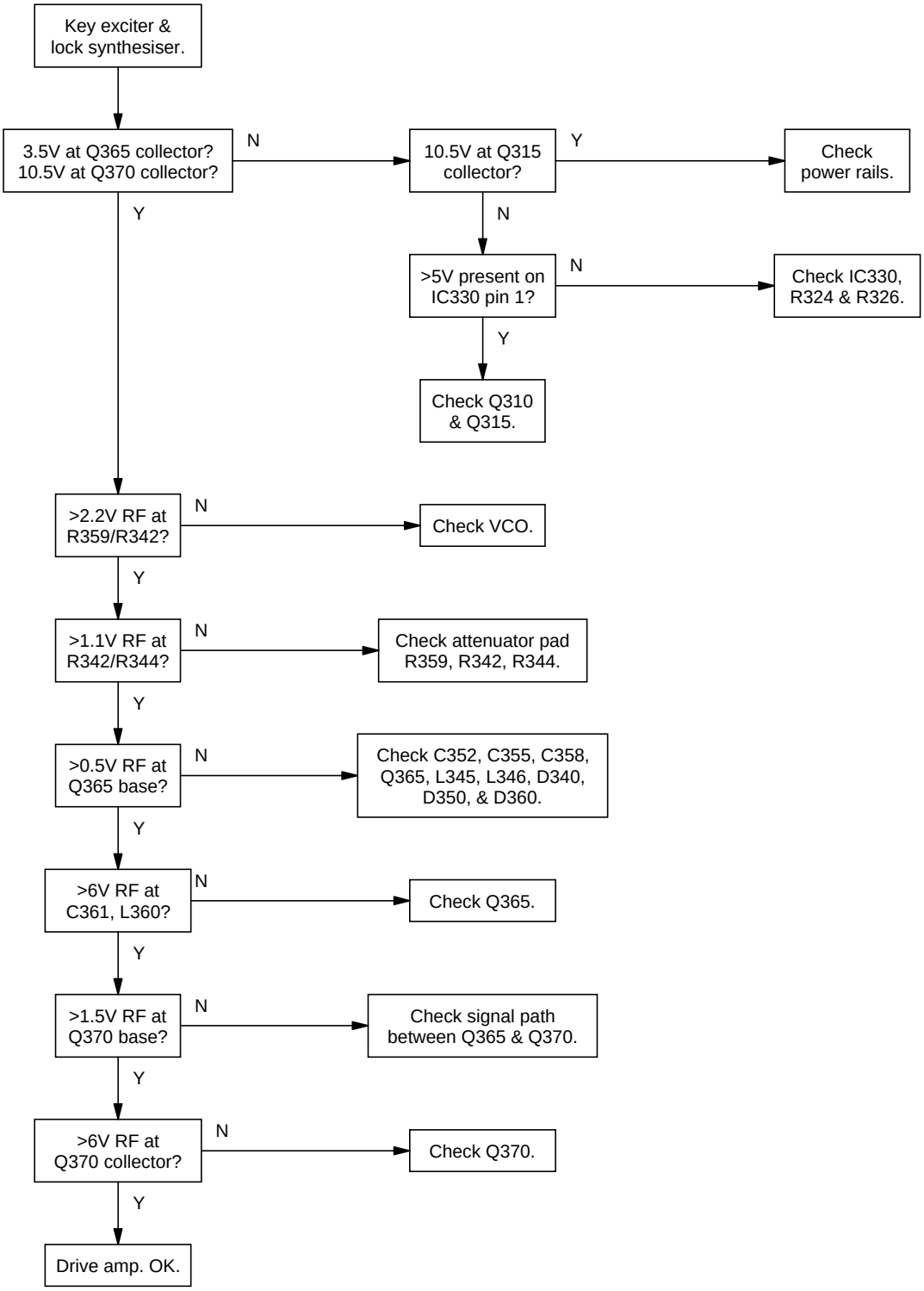

Copyright TEL

6 T837 PCB Information

Caution: **This equipment contains CMOS devices which are susceptible to damage from static charges. Refer to Section 1.2 in Part A for more information on anti-static procedures when handling these devices.**

This section provides the following information on the T837 paging exciter:

- parts lists
- grid reference index
- PCB layouts
- circuit diagrams.

Section	Title	IPN	Page
6.1	Introduction		6.1.3
6.2	T837 Paging Exciter PCB	220-01585-01	6.2.1

Copyright TEL

6.1 Introduction

Product Type Identification

You can identify the exciter type by checking the product code printed on a label on the rear of the chassis (product codes are explained in Section 1.3 in this Part of the manual, and Figure 1.1 in Part A shows typical labels). You can further verify the product type by checking the placement of an SMD resistor in the table that is screen printed onto the top side of the PCB, similar to the example drawn below. In this example, the resistor indicates that the product was built as a T837-20-XXXX.

837-	
837-	
837-	
PRODUCT TYPE	

PRODUCT TYPE	
837-10	837-20
837-13	837-23
837-15	837-25

Note: The only function of this resistor is to indicate the product type. It has no effect on the circuitry or operation of the exciter.

PCB Identification

All PCBs are identified by a unique 10 digit "internal part number" (IPN), e.g. 220-12345-00, which is screen printed onto the PCB (usually on the top side), as shown in the example below:

The last 2 digits of this number define the issue status, which starts at 00 and increments through 01, 02, 03, etc. as the PCB is updated. Some issue PCBs never reach full production status and are therefore not included in this manual. A letter following the 10 digit IPN has no relevance in identifying the PCB for service purposes.

Note: It is important that you identify which issue PCB you are working on so that you can refer to the appropriate set of PCB information.

Parts Lists

The 10 digit numbers (000-00000-00) in this Parts List are "internal part numbers" (IPNs). We can process your spare parts orders more efficiently and accurately if you quote the IPN and provide a brief description of the part.

The components listed in this parts list are divided into two main types: those with a circuit reference (e.g. C2, D1, R121, etc.) and those without (miscellaneous and mechanical).

Those with a circuit reference are grouped in alphabetical order and then in numerical order within each group. Each component entry comprises three or four columns, as shown below:

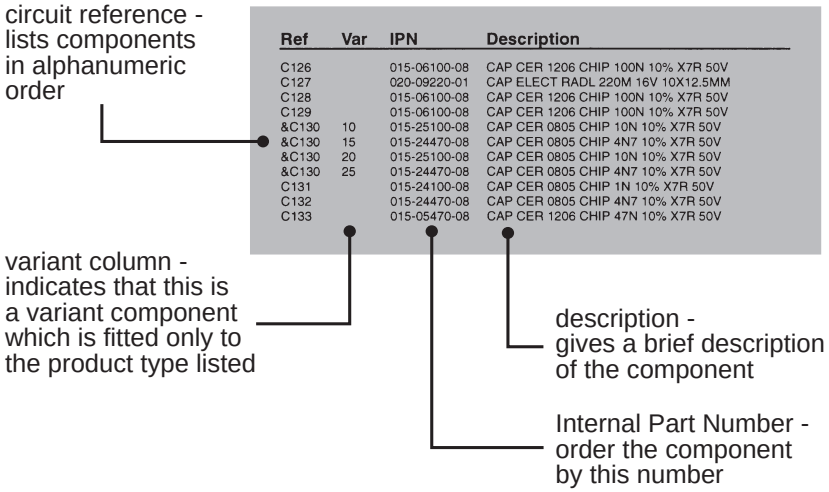

Ref	Var	IPN	Description
C126		015-06100-08	CAP CER 1206 CHIP 100N 10% X7R 50V
C127		020-09220-01	CAP ELECT RADL 220M 16V 10X12.5MM
C128		015-06100-08	CAP CER 1206 CHIP 100N 10% X7R 50V
C129		015-06100-08	CAP CER 1206 CHIP 100N 10% X7R 50V
&C130	10	015-25100-08	CAP CER 0805 CHIP 10N 10% X7R 50V
&C130	15	015-24470-08	CAP CER 0805 CHIP 4N7 10% X7R 50V
&C130	20	015-25100-08	CAP CER 0805 CHIP 10N 10% X7R 50V
&C130	25	015-24470-08	CAP CER 0805 CHIP 4N7 10% X7R 50V
C131		015-24100-08	CAP CER 0805 CHIP 1N 10% X7R 50V
C132		015-24470-08	CAP CER 0805 CHIP 4N7 10% X7R 50V
C133		015-05470-08	CAP CER 1206 CHIP 47N 10% X7R 50V

The mechanical and miscellaneous section lists the variant and common parts in IPN order.

Parts List Amendments

At the front of the parts list is the Parts List Amendments box (an example of which is shown below). This box contains a list of component changes which took place after the parts list and diagrams in this section were compiled. These changes (e.g. value changes, added/deleted components, etc.) are listed by circuit reference in alphanumeric order and supersede the information given in the parts list or diagrams. Components without circuit references are listed in IPN order. The number in brackets at the end of each entry refers to the Tait internal Change Order document.

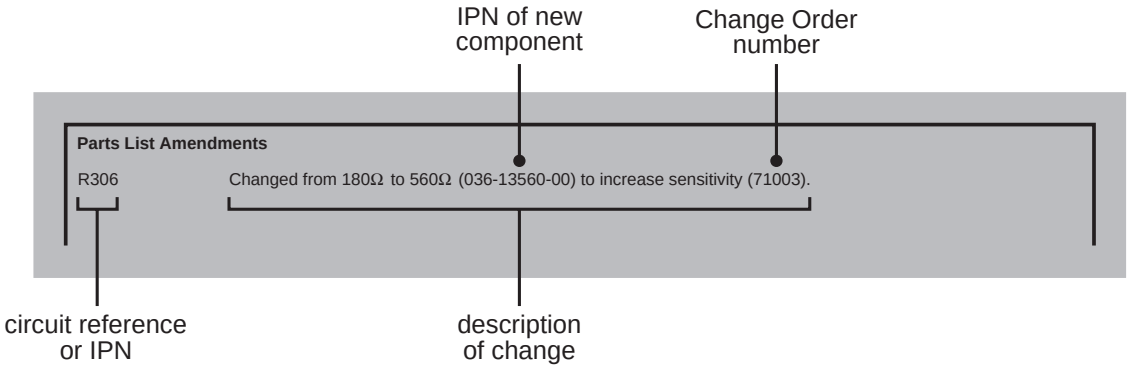

 Copyright TEL

Variant Components

A variant component is one that has the same circuit reference but different value or specification in different product types. Where two products share the same PCB, the term “variant” is also used to describe components unplaced in one product. Variant components have a character prefix, such as “&”, “=” or “#”, before the circuit reference (e.g. &R100).

The table below explains the variant prefixes used in T800 Series II products:

If the variant prefix is. . .	the component will. . .
&	change according to channel spacing
=	change according to frequency stability
#	change according to frequency range
%	change or be placed/unplaced for special applications
*	be unplaced in one product (where two products share the same PCB)

Grid Reference Index

This section contains a component grid reference index to help you find components and labelled pads on the PCB layouts and circuit diagrams. This index lists the components and pads in alphanumeric order, along with the appropriate alphanumeric grid references, as shown below:

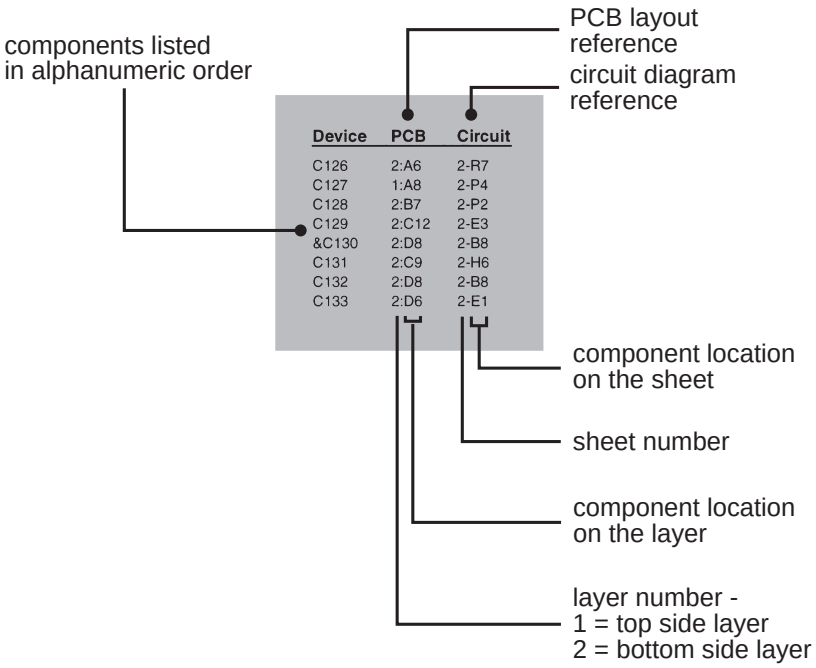

Using CAD Circuit Diagrams

Reading a CAD circuit diagram is similar to reading a road map, in that both have an alphanumeric border. The circuit diagrams in this manual use letters to represent the horizontal axis, and numbers for the vertical axis. These circuit diagram "grid references" are useful in following a circuit that is spread over two or more sheets.

When a line representing part of the circuitry is discontinued, a reference will be given at the end of the line to indicate where the rest of the circuitry is located, as shown below. The first digit refers to the sheet number and the last two characters refer to the location on that sheet of the continuation of the circuit (e.g. 1R3).

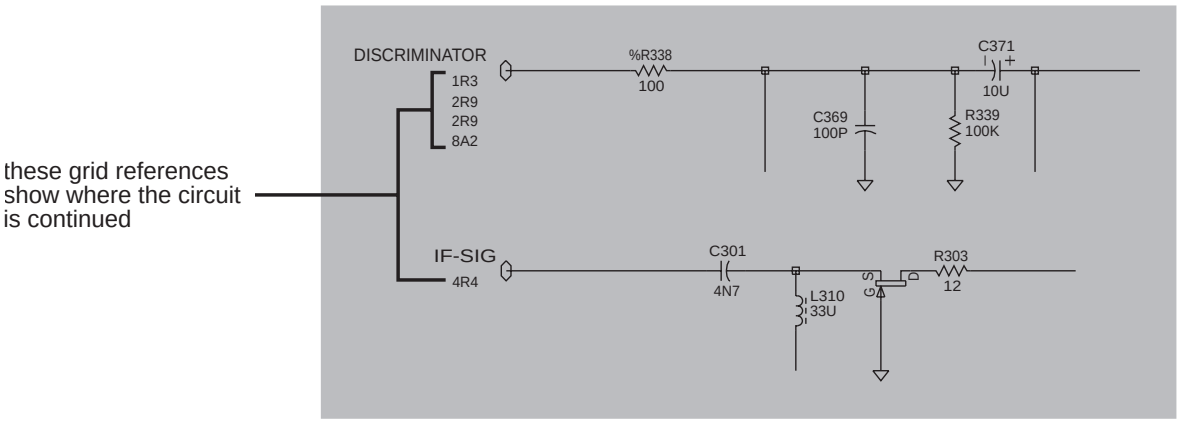

 Copyright TEL

6.2 T837 Paging Exciter PCB

This section contains the following information.

IPN	Section	Page
220-011585-01	Parts List	6.2.5
	Mechanical & Miscellaneous Parts	6.2.9
	Grid Reference Index	6.2.10
	PCB Layout - Top Side	6.2.13
	PCB Layout - Bottom Side	6.2.14
	Exciter Overview Diagram	6.2.15
	Low Speed Paging Modulator Circuit Diagram	6.2.16
	Exciter Circuit Diagram	6.2.17
	VCO Section Circuit Diagram	6.2.19
	Regulators Circuit Diagram	6.2.20
	Synthesiser Circuit Diagram	6.2.21
	Microcontroller Circuit Diagram	6.2.22
	Harmonic Filter Circuit Diagram	6.2.23

Copyright TEL

T837 Parts List (IPN 220-01585-01)

How To Use This Parts List

The components listed in this parts list are divided into two main types: those with a circuit reference (e.g. C2, D1, R121, etc.) and those without (miscellaneous and mechanical).

Those with a circuit reference are grouped in alphabetical order and then in numerical order within each group. Each component entry comprises three or four columns: the circuit reference, variant (if applicable), IPN and description. A number in the variant column indicates that this is a variant component which is fitted only to the product type listed. Static sensitive devices are indicated by an (S) at the start of the description column.

The miscellaneous and mechanical section lists the variant and common parts in IPN order. Where possible, a number in the legend column indicates their position in the mechanical assembly drawing.

The Parts List Amendments box below lists component changes that took place after the parts list and diagrams in this section were compiled. These changes (e.g. value changes, added/deleted components, etc.) are listed by circuit reference in alphanumeric order and supersede the information given in the parts list or diagrams. Components without circuit references are listed in IPN order.

Parts List Amendments

There were no amendments to the parts list at the time of publication.

Parts List Amendments - Continued

This page is provided for entering future amendments to the parts list.

Copyright TEL

Note: The T837-2X-1020 and T837-2X-1021 share the same basic design and are built on the same PCB. However, there are a number of special variant components in these products.

The "*" variant prefix is used to indicate those components which are placed only in the T837-2X-1021.

The "%" prefix indicates components which are placed in all product types, but may have different values in each product type.

The "*%" prefixes indicate components which are optional in the T837-2X-1021 only, and not placed at all in the T837-2X-1020.

Ref	Var	IPN	Description
C100		014-08100-00	CAP TANT CHIP 10M 16VW +-20%
C101		014-08100-00	CAP TANT CHIP 10M 16VW +-20%
C102		015-24100-08	CAP CER 0805 1N 10% X7R 50V
C103		015-24100-08	CAP CER 0805 1N 10% X7R 50V
C104		015-24100-08	CAP CER 0805 1N 10% X7R 50V
C105		015-24100-08	CAP CER 0805 1N 10% X7R 50V
C106		015-24100-08	CAP CER 0805 1N 10% X7R 50V
*C107	20-1021	015-25470-08	CAP CER 0805 47N 10% X7R 50V
*C107	26-1021	015-25470-08	CAP CER 0805 47N 10% X7R 50V
C108		015-21820-02	CAP 0805 8P2 0.1 NPO 50V
C109		015-22470-01	CAP CER 0805 47P 5% NPO 50V
*C110	20-1021	015-25100-08	CAP CER 0805 10N 10% X7R 50V
*C110	26-1021	015-25100-08	CAP CER 0805 10N 10% X7R 50V
*C111	20-1021	015-24100-08	CAP CER 0805 1N 10% X7R 50V
*C111	26-1021	015-24100-08	CAP CER 0805 1N 10% X7R 50V
C112		015-24100-08	CAP CER 0805 1N 10% X7R 50V
%C113	20-1020	015-25100-08	CAP CER 0805 10N 10% X7R 50V
%C113	20-1021	015-25100-08	CAP CER 0805 10N 10% X7R 50V
%C113	26-1020	015-24680-08	CAP CER 0805 6N8 10% X7R 50V
%C113	26-1021	015-24680-08	CAP CER 0805 6N8 10% X7R 50V
C115		015-21820-02	CAP 0805 8P2 0.1 NPO 50V
*C122	20-1021	015-25100-08	CAP CER 0805 10N 10% X7R 50V
*C122	26-1021	015-25100-08	CAP CER 0805 10N 10% X7R 50V
C123		015-24100-08	CAP CER 0805 1N 10% X7R 50V
*C124	20-1021	015-24100-08	CAP CER 0805 1N 10% X7R 50V
*C124	26-1021	015-24100-08	CAP CER 0805 1N 10% X7R 50V
%C125	20-1020	015-24220-08	CAP CER 0805 2N2 10% X7R 50V
%C125	20-1021	015-24220-08	CAP CER 0805 2N2 10% X7R 50V
*C126	20-1021	015-24100-08	CAP CER 0805 1N 10% X7R 50V
*C126	26-1021	015-24100-08	CAP CER 0805 1N 10% X7R 50V
*C127	20-1021	015-25100-08	CAP CER 0805 10N 10% X7R 50V
*C127	26-1021	015-25100-08	CAP CER 0805 10N 10% X7R 50V
%C128	20-1020	015-24100-08	CAP CER 0805 1N 10% X7R 50V
%C128	20-1021	015-24100-08	CAP CER 0805 1N 10% X7R 50V
%C128	26-1020	015-24100-08	CAP CER 0805 1N 10% X7R 50V
%C128	26-1021	015-24100-08	CAP CER 0805 1N 10% X7R 50V
%C129	20-1020	015-25220-08	CAP CER 0805 22N 10% X7R 50V
%C129	20-1021	015-25220-08	CAP CER 0805 22N 10% X7R 50V
%C129	26-1020	015-24220-08	CAP CER 0805 2N2 10% X7R 50V
%C129	26-1021	015-24220-08	CAP CER 0805 2N2 10% X7R 50V
*C130	20-1021	014-08100-00	CAP TANT CHIP 10M 16VW +-20%
*C130	26-1021	014-08100-00	CAP TANT CHIP 10M 16VW +-20%
*C131	20-1021	015-25100-08	CAP CER 0805 10N 10% X7R 50V
*C131	26-1021	015-25100-08	CAP CER 0805 10N 10% X7R 50V
*C132	20-1021	014-07470-01	CAP 4U7 'B'CASE 25V +-10% 267
*C132	26-1021	014-07470-01	CAP 4U7 'B'CASE 25V +-10% 267
*C133	20-1021	015-24470-08	CAP CER 0805 4N7 10% X7R 50V
*C133	26-1021	015-24470-08	CAP CER 0805 4N7 10% X7R 50V
*C134	20-1021	013-06100-10	CAP SMD PPS 100N 100V 10%
*C134	26-1021	013-06100-10	CAP SMD PPS 100N 100V 10%
*C135	20-1021	015-24470-08	CAP CER 0805 4N7 10% X7R 50V
*C135	26-1021	015-24470-08	CAP CER 0805 4N7 10% X7R 50V
*%C136	20-1021	015-24100-08	CAP CER 0805 1N 10% X7R 50V
*%C136	26-1020	015-24100-08	CAP CER 0805 1N 10% X7R 50V
*%C136	26-1021	015-24100-08	CAP CER 0805 1N 10% X7R 50V
%C137	20-1020	036-10000-00	RES M/F 0805 ZERO OHM
%C137	20-1021	015-24680-08	CAP CER 0805 6N8 10% X7R 50V
%C137	26-1020	015-24680-08	CAP CER 0805 6N8 10% X7R 50V
%C137	26-1021	015-24680-08	CAP CER 0805 6N8 10% X7R 50V
C138		015-24330-08	CAP CER 0805 3N3 10% X7R 50V
C139		015-24330-08	CAP CER 0805 3N3 10% X7R 50V
*C140	20-1021	015-25100-08	CAP CER 0805 10N 10% X7R 50V
*C140	26-1021	015-25100-08	CAP CER 0805 10N 10% X7R 50V
C141		015-24220-08	CAP CER 0805 2N2 10% X7R 50V
C142		015-24220-08	CAP CER 0805 2N2 10% X7R 50V
*C143	20-1021	015-25100-08	CAP CER 0805 10N 10% X7R 50V
*C143	26-1021	015-25100-08	CAP CER 0805 10N 10% X7R 50V
C144		015-23100-01	CAP CER 0805 100P 5% NPO 50V
*C145	20-1021	014-07470-01	CAP 4U7 'B'CASE 25V +-10% 267
*C145	26-1021	014-07470-01	CAP 4U7 'B'CASE 25V +-10% 267
*C146	20-1021	014-08100-00	CAP TANT CHIP 10M 16VW +-20%
*C146	26-1021	014-08100-00	CAP TANT CHIP 10M 16VW +-20%
*C147	20-1021	015-06100-08	CAP CER 1206 100N 10% X7R 50V
*C147	26-1021	015-06100-08	CAP CER 1206 100N 10% X7R 50V
C148		014-08100-00	CAP TANT CHIP 10M 16VW +-20%
C149		015-25100-08	CAP CER 0805 10N 10% X7R 50V
C150		014-08100-00	CAP TANT CHIP 10M 16VW +-20%
C151		015-25100-08	CAP CER 0805 10N 10% X7R 50V
C152		013-06470-00	CAP SMD POLYESTER 470N 63V 10%
C153		013-06470-00	CAP SMD POLYESTER 470N 63V 10%
C154		015-25100-08	CAP CER 0805 10N 10% X7R 50V
C155		015-06100-08	CAP CER 1206 100N 10% X7R 50V
C156		015-25100-08	CAP CER 0805 10N 10% X7R 50V
*C157	20-1021	015-25100-08	CAP CER 0805 10N 10% X7R 50V
*C157	26-1021	015-25100-08	CAP CER 0805 10N 10% X7R 50V
C158		015-25100-08	CAP CER 0805 10N 10% X7R 50V
C159		014-08100-00	CAP TANT CHIP 10M 16VW +-20%
C160		015-25100-08	CAP CER 0805 10N 10% X7R 50V
C161		014-08100-00	CAP TANT CHIP 10M 16VW +-20%
C162		015-25100-08	CAP CER 0805 10N 10% X7R 50V
C163		015-23100-01	CAP CER 0805 100P 5% NPO 50V
C164		014-08100-00	CAP TANT CHIP 10M 16VW +-20%
*C165	20-1021	015-25100-08	CAP CER 0805 10N 10% X7R 50V
*C165	26-1021	015-25100-08	CAP CER 0805 10N 10% X7R 50V
C166		015-25100-08	CAP CER 0805 10N 10% X7R 50V
C167		014-08100-00	CAP TANT CHIP 10M 16VW +-20%
C168		014-08100-00	CAP TANT CHIP 10M 16VW +-20%
*C169	20-1021	014-08100-00	CAP TANT CHIP 10M 16VW +-20%
*C169	26-1021	014-08100-00	CAP TANT CHIP 10M 16VW +-20%
C170		014-08100-00	CAP TANT CHIP 10M 16VW +-20%
*C171	20-1021	014-08100-00	CAP TANT CHIP 10M 16VW +-20%
*C171	26-1020	014-08100-00	CAP TANT CHIP 10M 16VW +-20%
*C171	26-1021	014-08100-00	CAP TANT CHIP 10M 16VW +-20%
C172		015-06100-08	CAP CER 1206 100N 10% X7R 50V
*C173	20-1021	015-06100-08	CAP CER 1206 100N 10% X7R 50V
*C173	26-1020	015-06100-08	CAP CER 1206 100N 10% X7R 50V
*C173	26-1021	015-06100-08	CAP CER 1206 100N 10% X7R 50V
C301		015-24470-08	CAP CER 0805 4N7 10% X7R 50V
C304		015-24100-08	CAP CER 0805 1N 10% X7R 50V
C307		015-25100-08	CAP CER 0805 10N 10% X7R 50V
C309		015-23680-08	CAP CER 0805 680P 10% X7R 50V
C310		015-24100-08	CAP CER 0805 1N 10% X7R 50V
C313		015-24100-08	CAP CER 0805 1N 10% X7R 50V
C317		015-23100-01	CAP CER 0805 100P 5% NPO 50V
C318		015-23100-01	CAP CER 0805 100P 5% NPO 50V
C319		015-24100-08	CAP CER 0805 1N 10% X7R 50V
C325		015-24100-08	CAP CER 0805 1N 10% X7R 50V
C328		015-25470-08	CAP CER 0805 47N 10% X7R 50V
C330A		015-25100-08	CAP CER 0805 10N 10% X7R 50V
C330B		014-08100-03	CAP TANT SMD 10U 35V 20%
C331		015-24100-08	CAP CER 0805 1N 10% X7R 50V
C334		014-07470-04	CAP TANT SMD 4U7 50V 20%
C337		015-24100-08	CAP CER 0805 1N 10% X7R 50V
C340		015-24100-08	CAP CER 0805 1N 10% X7R 50V
C343		015-24100-08	CAP CER 0805 1N 10% X7R 50V
C346		015-24100-08	CAP CER 0805 1N 10% X7R 50V
C349		015-23150-01	CAP CER 0805 150P 5% NPO 50V
C352		015-24100-08	CAP CER 0805 1N 10% X7R 50V
C355		015-22330-01	CAP CER 0805 33P 5% NPO 50V
C358		015-22820-01	CAP CER 0805 82P 5% NPO 50V
C361		015-24100-08	CAP CER 0805 1N 10% X7R 50V
C376		015-04100-04	CAP CER 1206 1N 10% X7R 50V
C379		015-04100-04	CAP CER 1206 1N 10% X7R 50V
C382		015-24100-08	CAP CER 0805 1N 10% X7R 50V
C383		015-24100-08	CAP CER 0805 1N 10% X7R 50V
C384		015-22470-01	CAP CER 0805 47P 5% NPO 50V
C385		015-24100-08	CAP CER 0805 1N 10% X7R 50V
C388		015-24100-08	CAP CER 0805 1N 10% X7R 50V
C390		015-25100-08	CAP CER 0805 10N 10% X7R 50V
C391		015-21820-02	CAP 0805 8P2 0.1 NPO 50V
C392		015-25220-08	CAP CER 0805 22N 10% X7R 50V
C393		015-06100-08	CAP CER 1206 100N 10% X7R 50V
C394		015-24100-08	CAP CER 0805 1N 10% X7R 50V
C395		015-24100-08	CAP CER 0805 1N 10% X7R 50V
C397		015-24100-08	CAP CER 0805 1N 10% X7R 50V
C398		015-24100-08	CAP CER 0805 1N 10% X7R 50V
C503		015-24470-08	CAP CER 0805 4N7 10% X7R 50V
C505		015-06100-08	CAP CER 1206 100N 10% X7R 50V
C510		015-25220-08	CAP CER 0805 22N 10% X7R 50V
C513		015-25100-08	CAP CER 0805 10N 10% X7R 50V
C535		015-06100-08	CAP CER 1206 100N 10% X7R 50V
C550		014-08220-01	CAP TANT 22UF 10V 276MSER
C605		015-23120-01	CAP CER 0805 120P 5% NPO 50V
C610A		015-25100-08	CAP CER 0805 10N 10% X7R 50V
C610B		014-09100-00	CAP TANT SMD 100U 16V 20%
C611A		014-09100-00	CAP TANT SMD 100U 16V 20%
C611B		015-25100-08	CAP CER 0805 10N 10% X7R 50V
C623		015-23120-01	CAP CER 0805 120P 5% NPO 50V
C625		020-09470-07	CAP ELEC RADL 470M 16V 20% 3.5
C626		015-24470-08	CAP CER 0805 4N7 10% X7R 50V
C628		015-24100-08	CAP CER 0805 1N 10% X7R 50V
C630		015-06100-08	CAP CER 1206 100N 10% X7R 50V
C631		015-06100-08	CAP CER 1206 100N 10% X7R 50V
C634		014-08100-00	CAP TANT CHIP 10M 16VW +-20%
C636		015-06100-08	CAP CER 1206 100N 10% X7R 50V
C638		015-23120-01	CAP CER 0805 120P 5% NPO 50V
C640		015-24100-08	CAP CER 0805 1N 10% X7R 50V
C660		015-06100-08	CAP CER 1206 100N 10% X7R 50V
C665		014-08100-03	CAP TANT SMD 10U 35V 20%
C670		014-07330-10	CAP TANT SMD 3U3 35V 10%

Ref	Var	IPN	Description
C673		015-24470-08	CAP CER 0805 4N7 10% X7R 50V
C677		014-07100-02	CAP TANT CHIP 1U0 3.2X1.6M 16V
C681		015-06100-08	CAP CER 1206 100N 10% X7R 50V
C684		014-08100-00	CAP TANT CHIP 10M 16VW +-20%
C687		015-23120-01	CAP CER 0805 120P 5% NPO 50V
C690		015-06100-08	CAP CER 1206 100N 10% X7R 50V
C693		014-08100-00	CAP TANT CHIP 10M 16VW +-20%
C706		015-22470-01	CAP CER 0805 47P 5% NPO 50V
C708		014-07470-01	CAP 4U7 'B'CASE 25V +-10% 267
C709		015-06100-08	CAP CER 1206 100N 10% X7R 50V
C710		015-25100-08	CAP CER 0805 10N 10% X7R 50V
C712		015-22470-01	CAP CER 0805 47P 5% NPO 50V
C713		015-25100-08	CAP CER 0805 10N 10% X7R 50V
C714		014-07470-01	CAP 4U7 'B'CASE 25V +-10% 267
C733		015-21470-01	CAP CER 0805 4P7+-0.25 NPO 50V
C735		015-22470-01	CAP CER 0805 47P 5% NPO 50V
C736		015-22470-01	CAP CER 0805 47P 5% NPO 50V
C740A		015-24100-08	CAP CER 0805 1N 10% X7R 50V
C740B		015-25100-08	CAP CER 0805 10N 10% X7R 50V
C741A		014-07470-01	CAP 4U7 'B'CASE 25V +-10% 267
C741B		015-25100-08	CAP CER 0805 10N 10% X7R 50V
C742A		015-06100-08	CAP CER 1206 100N 10% X7R 50V
C742B		015-25100-08	CAP CER 0805 10N 10% X7R 50V
C743		015-22470-01	CAP CER 0805 47P 5% NPO 50V
C745		015-24100-08	CAP CER 0805 1N 10% X7R 50V
C750		014-08100-03	CAP TANT SMD 10U 35V 20%
C757		015-06100-08	CAP CER 1206 100N 10% X7R 50V
C759		015-06100-08	CAP CER 1206 100N 10% X7R 50V
C761		015-25100-08	CAP CER 0805 10N 10% X7R 50V
C762		014-08220-01	CAP TANT 22UF 10V 276MSER
C764		015-25100-08	CAP CER 0805 10N 10% X7R 50V
C765		014-07470-01	CAP 4U7 'B'CASE 25V +-10% 267
C767		015-24100-08	CAP CER 0805 1N 10% X7R 50V
C769		015-24100-08	CAP CER 0805 1N 10% X7R 50V
C770		014-08220-01	CAP TANT 22UF 10V 276MSER
C772		014-08220-01	CAP TANT 22UF 10V 276MSER
C774		013-06330-11	CAP SMD PPS 330N 63V 5%
C776		015-25150-08	CAP CER 0805 15N 10% X7R 50V
C782		015-24100-08	CAP CER 0805 1N 10% X7R 50V
C784		015-24100-08	CAP CER 0805 1N 10% X7R 50V
C786		015-06100-08	CAP CER 1206 100N 10% X7R 50V
C788		015-24100-08	CAP CER 0805 1N 10% X7R 50V
C790		015-24100-08	CAP CER 0805 1N 10% X7R 50V
C792		015-24100-08	CAP CER 0805 1N 10% X7R 50V
C810		015-25470-08	CAP CER 0805 47N 10% X7R 50V
C812		015-23100-01	CAP CER 0805 100P 5% NPO 50V
C813		015-24100-08	CAP CER 0805 1N 10% X7R 50V
C910		015-02120-06	CAP CER 1210 12P NPO500VGRM42
C920		015-02270-06	CAP CER 1210 27P NPO 500V
C930		015-02120-06	CAP CER 1210 12P NPO500VGRM42
%D1	20-1020	001-10015-50	DIODE SMD ZENER 1.5SMC22AT3
%D1	20-1021	001-10015-50	DIODE SMD ZENER 1.5SMC22AT3
%D1	26-1020	001-10015-50	DIODE SMD ZENER 1.5SMC22AT3
%D1	26-1021	001-10015-50	DIODE SMD ZENER 1.5SMC22AT3
*D100	20-1021	001-10000-70	S) DIODE SMD BAV70 D-SW SOT23
*D100	26-1021	001-10000-70	S) DIODE SMD BAV70 D-SW SOT23
D105		001-10000-70	S) DIODE SMD BAV70 D-SW SOT23
*D116	20-1021	008-10067-03	S) LED SMD GRN LGT670-HK
*D116	26-1021	008-10067-03	S) LED SMD GRN LGT670-HK
D119		008-00014-80	S)LED 3MM GREEN WITH WIRE
D120		001-10000-70	S) DIODE SMD BAV70 D-SW SOT23
D125		008-00014-79	S)LED 3MM RED WITH WIRE
D130		001-10000-70	S) DIODE SMD BAV70 D-SW SOT23
D135		001-10000-70	S) DIODE SMD BAV70 D-SW SOT23
D140		001-10000-70	S) DIODE SMD BAV70 D-SW SOT23
D160		001-10000-70	S) DIODE SMD BAV70 D-SW SOT23
*D200	20-1021	001-10000-70	S) DIODE SMD BAV70 D-SW SOT23
*D200	26-1021	001-10000-70	S) DIODE SMD BAV70 D-SW SOT23
*D220	20-1021	001-10000-99	S) DIODE SMD BAV99 D-SW SOT23
*D220	26-1021	001-10000-99	S) DIODE SMD BAV99 D-SW SOT23
D340		001-10000-18	S) DIODE SMD BAT18 S-SW SOT23
D350		001-10000-18	S) DIODE SMD BAT18 S-SW SOT23
D360		001-10000-18	S) DIODE SMD BAT18 S-SW SOT23
D370		001-10010-40	DIODE SMD ZENER 33V BZG03-C33
D610		001-10000-99	S) DIODE SMD BAV99 D-SW SOT23
D640		001-10000-70	S) DIODE SMD BAV70 D-SW SOT23
D645		001-10010-40	DIODE SMD ZENER 33V BZG03-C33
D730		001-10165-00	DIODE BAT165 SCHOTTKY SOD-323
D740		001-10165-00	DIODE BAT165 SCHOTTKY SOD-323
IC100		002-74910-04	S) IC SMD 74HCU04 6X INV
IC102		002-74910-04	S) IC SMD 74HCU04 6X INV
IC105		002-74901-09	S) IC SMD 74HC109 DUAL JK F/F
IC110		002-74901-09	S) IC SMD 74HC109 DUAL JK F/F
IC115		002-74900-86	S) IC SMD 74HC86 EX OR SO14
IC120		002-10006-60	S) IC SMD LMC660CM O-AMP 4X
IC125		002-10006-60	S) IC SMD LMC660CM O-AMP 4X
IC140		002-10041-04	S) IC SMD 4104 4X VOLT SHIFTER
IC150		002-10040-53	S)IC 4053B SMD BREAK B4 MAKE
*IC160	20-1021	002-10040-53	S)IC 4053B SMD BREAK B4 MAKE
*IC160	26-1021	002-10040-53	S)IC 4053B SMD BREAK B4 MAKE
*IC200	20-1021	002-14515-00	LIM)IC MC145151DW2 SYNTH P-IP
*IC200	26-1021	002-14515-00	LIM)IC MC145151DW2 SYNTH P-IP
*IC210	20-1021	002-10006-62	S)IC SMD LMC662CM 2X O-AMP
*IC210	26-1021	002-10006-62	S)IC SMD LMC662CM 2X O-AMP
*IC220	20-1021	002-74910-04	S) IC SMD 74HCU04 6X INV
*IC220	26-1021	002-74910-04	S) IC SMD 74HCU04 6X INV

Ref	Var	IPN	Description
*IC230	20-1021	002-10006-62	S)IC SMD LMC662CM 2X O-AMP
*IC230	26-1020	002-10006-62	S)IC SMD LMC662CM 2X O-AMP
*IC230	26-1021	002-10006-62	S)IC SMD LMC662CM 2X O-AMP
IC240		002-10006-60	S) IC SMD LMC660CM O-AMP 4X
IC250		002-10078-00	S)IC SMD MC78M05CDT 5V REG0.5A
IC330		002-10003-58	S) IC SMD LM358 DUAL O-AMP
IC610		002-10078-05	S) IC SMD 78L05 5V REG
IC630		002-10003-17	(S) IC LM317L REG S0-8 100MA
IC640		002-10003-58	S) IC SMD LM358 DUAL O-AMP
IC650		002-10012-32	SMD DS1232LPS-2 LP RESET&W-DOG
IC710		002-74900-04	S) IC SMD 74HC04D 6X INV BUFFD
IC740		002-14519-10	S) IC MC145191F SMD SYNTH
IC750		002-10330-78	S) IC MC33078D 2X AMP LO NOISE
IC810		002-08951-20	S) IC AT89C51 PLCC44 MIC 12MHZ
IC820		002-12416-00	S)IC SMD AT24C16N-10SC EEPROM
L335		056-10330-02	IND SMD 330NH SIMID02
L340		056-10330-02	IND SMD 330NH SIMID02
L345		052-08135-25	COIL A/W 2.5T/3.5MM HOR 0.8MM
L346		052-08125-15	COIL A/W 1.5T/2.5MM HOR 0.8MM
L355		056-14150-02	IND SMD 1.5UH SIMID02
L360		052-08135-35	COIL A/W 3.5T/3.5MM HOR 0.8MM
L365		052-08140-15	COIL A/W 1.5T/4.0MM HOR 0.8MM
L370		065-10009-20	BEAD FER SMD BDS 3/3/8.9-4S2
L375		065-10004-20	BEAD FE SMD CBD 4.6/3/3-4S2
L380		056-14150-02	IND SMD 1.5UH SIMID02
L385		052-08145-35	COIL A/W 3.5/4.5MM HOR 0.8MM
L390		056-10330-02	IND SMD 330NH SIMID02
L750		056-10068-02	IND SMD 68NH SIMID02
L910		052-08145-35	COIL A/W 3.5/4.5MM HOR 0.8MM
L920		052-08145-35	COIL A/W 3.5/4.5MM HOR 0.8MM
PL1		070-01001-00	D-RANGE 15 WAY COMPL T800
Q100		000-10008-47	S) XSTR SMD BCW72 NPN
Q101		000-10008-47	S) XSTR SMD BCW72 NPN
Q102		000-10008-47	S) XSTR SMD BCW72 NPN
Q103		000-10008-47	S) XSTR SMD BCW72 NPN
*Q104	20-1021	000-10008-47	S) XSTR SMD BCW72 NPN
*Q104	26-1021	000-10008-47	S) XSTR SMD BCW72 NPN
Q105		000-10008-47	S) XSTR SMD BCW72 NPN
Q305		000-10008-47	S) XSTR SMD BCW72 NPN
Q310		000-10008-47	S) XSTR SMD BCW72 NPN
Q315		000-00033-12	XSTR BD242 TO-220 PNP ISOLTD
Q320		000-10008-07	S) XSTR SMD BC807 PNP SOT23 AF
Q325		000-10008-07	S) XSTR SMD BC807 PNP SOT23 AF
Q330		000-10008-57	S) XSTR SMD BCW70 PNP SOT23 SS
Q335		000-10008-07	S) XSTR SMD BC807 PNP SOT23 AF
Q340		000-10008-47	S) XSTR SMD BCW72 NPN
Q345		000-10008-47	S) XSTR SMD BCW72 NPN
Q365		000-10038-66	S) XSTR SMD MRF3866 SO8
Q370		000-00022-30	S) XSTR 2N4427 NPN T039 VHF DR
Q510		000-10008-07	S) XSTR SMD BC807 PNP SOT23 AF
Q520		000-10008-07	S) XSTR SMD BC807 PNP SOT23 AF
Q530		000-10008-07	S) XSTR SMD BC807 PNP SOT23 AF
Q540		000-10008-07	S) XSTR SMD BC807 PNP SOT23 AF
Q550		000-10008-17	S) XSTR SMD BC817-25 NPN SOT23
Q610		000-10008-07	S) XSTR SMD BC807 PNP SOT23 AF
Q620		000-00033-12	XSTR BD242 TO-220 PNP ISOLTD
Q630		000-10003-00	S) XSTR BSR30 PNP AF SOT-89
Q660		000-10008-17	S) XSTR SMD BC817-25 NPN SOT23
Q670		000-10008-57	S) XSTR SMD BCW70 PNP SOT23 SS
Q750		000-10008-07	S) XSTR SMD BC807 PNP SOT23 AF
Q760		000-10008-47	S) XSTR SMD BCW72 NPN
Q770		000-10008-57	S) XSTR SMD BCW70 PNP SOT23 SS
Q775		000-10008-57	S) XSTR SMD BCW70 PNP SOT23 SS
Q780		000-10008-47	S) XSTR SMD BCW72 NPN
Q785		000-10008-57	S) XSTR SMD BCW70 PNP SOT23 SS
Q790		000-10003-12	S) XSTR SMD BFR31 N JFET SOT23
Q795		000-10057-10	S) XSTR SMD BR571 NPN SOT23
Q820		000-10008-17	S) XSTR SMD BC817-25 NPN SOT23
Q830		000-10008-57	S) XSTR SMD BCW70 PNP SOT23 SS
Q840		000-10008-57	S) XSTR SMD BCW70 PNP SOT23 SS
Q850		000-10008-47	S) XSTR SMD BCW72 NPN
Q860		000-10008-47	S) XSTR SMD BCW72 NPN
R100		036-14220-00	RES M/F 0805 2K2 5%
R101		036-12220-00	RES M/F 0805 22E 5%
R102		036-12220-00	RES M/F 0805 22E 5%
R103		036-14470-10	RES M/F 0805 4K7 1%
R104		036-14470-10	RES M/F 0805 4K7 1%
R105		036-14470-10	RES M/F 0805 4K7 1%
R106		036-14470-10	RES M/F 0805 4K7 1%
R107		036-14470-10	RES M/F 0805 4K7 1%
R108		036-14470-10	RES M/F 0805 4K7 1%
R109		036-15150-00	RES M/F 0805 15K 5%
R110		036-15100-10	RES M/F 0805 10K 1%
R111		036-15100-10	RES M/F 0805 10K 1%
R112		036-15100-10	RES M/F 0805 10K 1%
R113		036-15100-10	RES M/F 0805 10K 1%
R114		036-15470-10	RES M/F 0805 47K 1%
R115		036-15150-00	RES M/F 0805 15K 5%
R116		036-13100-10	RES M/F 0805 100E 1%
R117		036-13470-00	RES M/F 0805 470E 5%
R118		036-15470-10	RES M/F 0805 47K 1%
R119		036-15100-10	RES M/F 0805 10K 1%
R120		036-13470-00	RES M/F 0805 470E 5%
R122		036-15100-10	RES M/F 0805 10K 1%

Copyright TEL

Ref	Var	IPN	Description
R123		036-13470-00	RES M/F 0805 470E 5%
*R124	20-1021	036-12560-00	RES M/F 0805 56E 5%
*R124	26-1021	036-12560-00	RES M/F 0805 56E 5%
*R125	20-1021	036-14100-10	RES M/F 0805 1K 1%
*R125	26-1021	036-14100-10	RES M/F 0805 1K 1%
R126		036-14560-00	RES M/F 0805 5K6 5%
R127		036-14100-10	RES M/F 0805 1K 1%
*R128	20-1021	036-14220-00	RES M/F 0805 2K2 5%
*R128	26-1021	036-14220-00	RES M/F 0805 2K2 5%
R129		036-13560-10	RES M/F 0805 560E 1%
R130		036-15100-10	RES M/F 0805 10K 1%
R131		036-16470-00	RES M/F 0805 470K 5%
R132		036-15100-10	RES M/F 0805 10K 1%
*R133	20-1021	036-12220-00	RES M/F 0805 22E 5%
*R133	26-1021	036-12220-00	RES M/F 0805 22E 5%
%R134	20-1020	036-15220-00	RES M/F 0805 22K 5%
%R134	20-1021	036-15220-00	RES M/F 0805 22K 5%
%R134	26-1020	036-15120-00	RES M/F 0805 12K 5%
%R134	26-1021	036-15120-00	RES M/F 0805 12K 5%
*R135	20-1021	036-14100-10	RES M/F 0805 1K 1%
*R135	26-1021	036-14100-10	RES M/F 0805 1K 1%
R136		036-12100-10	RES M/F 0805 10E 1%
%R137	20-1020	036-14150-10	RES M/F 0805 1K5 1%
%R137	20-1021	036-14150-10	RES M/F 0805 1K5 1%
%R137	26-1020	036-13820-00	RES M/F 0805 820E 5%
%R137	26-1021	036-13820-00	RES M/F 0805 820E 5%
%R138	20-1020	036-15220-00	RES M/F 0805 22K 5%
%R138	20-1021	036-15220-00	RES M/F 0805 22K 5%
%R138	26-1020	036-15120-00	RES M/F 0805 12K 5%
%R138	26-1021	036-15120-00	RES M/F 0805 12K 5%
%R139	20-1020	036-15220-00	RES M/F 0805 22K 5%
%R139	20-1021	036-15220-00	RES M/F 0805 22K 5%
%R139	26-1020	036-10000-00	RES M/F 0805 ZERO OHM
%R139	26-1021	036-10000-00	RES M/F 0805 ZERO OHM
%R140	20-1020	036-14120-00	RES M/F 0805 1K2 5%
%R140	20-1021	036-14120-00	RES M/F 0805 1K2 5%
%R140	26-1020	036-15390-10	RES M/F 0805 39K 1%
%R140	26-1021	036-15390-10	RES M/F 0805 39K 1%
*R141	20-1021	036-17100-10	RES M/F 0805 1M 1%
*R141	26-1021	036-17100-10	RES M/F 0805 1M 1%
*R142	20-1021	036-16100-10	RES M/F 0805 100K 1%
*R142	26-1021	036-16100-10	RES M/F 0805 100K 1%
*R143	20-1021	036-15220-00	RES M/F 0805 22K 5%
*R143	26-1021	036-15220-00	RES M/F 0805 22K 5%
*R144	20-1021	036-14100-10	RES M/F 0805 1K 1%
*R144	26-1021	036-14100-10	RES M/F 0805 1K 1%
*R145	20-1021	036-14470-10	RES M/F 0805 4K7 1%
*R145	26-1021	036-14470-10	RES M/F 0805 4K7 1%
*R146	20-1021	036-15470-10	RES M/F 0805 47K 1%
*R146	26-1021	036-15470-10	RES M/F 0805 47K 1%
*R147	20-1021	036-16100-10	RES M/F 0805 100K 1%
*R147	26-1021	036-16100-10	RES M/F 0805 100K 1%
%R148	20-1020	036-13560-10	RES M/F 0805 560E 1%
%R148	20-1021	036-13560-10	RES M/F 0805 560E 1%
%R148	26-1020	036-14270-10	RES M/F 0805 2K7 1%
%R148	26-1021	036-14270-10	RES M/F 0805 2K7 1%
R149		036-16100-10	RES M/F 0805 100K 1%
*%R150	20-1021	036-10000-00	RES M/F 0805 ZERO OHM
%R150	26-1020	036-15220-00	RES M/F 0805 22K 5%
*%R150	26-1021	036-15220-00	RES M/F 0805 22K 5%
*R151	20-1021	036-16560-00	RES M/F 0805 560K 5%
*R151	26-1021	036-16560-00	RES M/F 0805 560K 5%
*R152	20-1021	036-16100-10	RES M/F 0805 100K 1%
*R152	26-1021	036-16100-10	RES M/F 0805 100K 1%
R153		036-10000-00	RES M/F 0805 ZERO OHM
*R154	20-1021	036-14220-00	RES M/F 0805 2K2 5%
*R154	26-1021	036-14220-00	RES M/F 0805 2K2 5%
R155		036-14270-10	RES M/F 0805 2K7 1%
R156		036-14220-00	RES M/F 0805 2K2 5%
*R158	20-1021	036-15100-10	RES M/F 0805 10K 1%
*R158	26-1021	036-15100-10	RES M/F 0805 10K 1%
*R159	20-1021	036-15220-00	RES M/F 0805 22K 5%
*R159	26-1021	036-15220-00	RES M/F 0805 22K 5%
*R160	20-1021	036-14270-10	RES M/F 0805 2K7 1%
*R160	26-1021	036-14270-10	RES M/F 0805 2K7 1%
*R161	20-1021	036-15100-10	RES M/F 0805 10K 1%
*R161	26-1021	036-15100-10	RES M/F 0805 10K 1%
R162		036-15100-10	RES M/F 0805 10K 1%
R163		036-14100-10	RES M/F 0805 1K 1%
R164		036-14100-10	RES M/F 0805 1K 1%
R165		036-15120-00	RES M/F 0805 12K 5%
*R166	20-1021	036-16100-10	RES M/F 0805 100K 1%
*R166	26-1021	036-16100-10	RES M/F 0805 100K 1%
*R167	20-1021	036-16100-10	RES M/F 0805 100K 1%
*R167	26-1021	036-16100-10	RES M/F 0805 100K 1%
R168		036-15180-10	RES M/F 0805 18K 1%
R169		036-15180-10	RES M/F 0805 18K 1%
R170		036-10000-00	RES M/F 0805 ZERO OHM
R171		036-10000-00	RES M/F 0805 ZERO OHM
R172		036-15330-10	RES M/F 0805 33K 1%
*R174	20-1021	036-16100-10	RES M/F 0805 100K 1%
*R174	26-1021	036-16100-10	RES M/F 0805 100K 1%
*R175	20-1021	036-16100-10	RES M/F 0805 100K 1%
*R175	26-1021	036-16100-10	RES M/F 0805 100K 1%
R176		036-15390-10	RES M/F 0805 39K 1%
R177		036-15100-10	RES M/F 0805 10K 1%
R178		036-16330-00	RES M/F 0805 330K 5%
*R179	20-1021	036-12220-00	RES M/F 0805 22E 5%
*R179	26-1021	036-12220-00	RES M/F 0805 22E 5%
R180		036-15100-10	RES M/F 0805 10K 1%
R181		036-15100-10	RES M/F 0805 10K 1%
R182		036-15100-10	RES M/F 0805 10K 1%
R183		036-14270-10	RES M/F 0805 2K7 1%
R184		036-14470-10	RES M/F 0805 4K7 1%
R185		036-15470-10	RES M/F 0805 47K 1%
R186		036-13100-10	RES M/F 0805 100E 1%
R187		036-15390-10	RES M/F 0805 39K 1%
R188		036-13100-10	RES M/F 0805 100E 1%
*R189	20-1021	036-12220-00	RES M/F 0805 22E 5%
*R189	26-1021	036-12220-00	RES M/F 0805 22E 5%
R190		036-17100-10	RES M/F 0805 1M 1%
R191		036-14470-10	RES M/F 0805 4K7 1%
R192		036-13100-10	RES M/F 0805 100E 1%
R193		036-12220-00	RES M/F 0805 22E 5%
R194		036-14270-10	RES M/F 0805 2K7 1%
R195		036-12220-00	RES M/F 0805 22E 5%
R196		036-17100-10	RES M/F 0805 1M 1%
R197		036-12220-00	RES M/F 0805 22E 5%
R198		036-12220-00	RES M/F 0805 22E 5%
R199		036-17100-10	RES M/F 0805 1M 1%
R200		036-17100-10	RES M/F 0805 1M 1%
R201		036-15390-10	RES M/F 0805 39K 1%
R202		036-12220-00	RES M/F 0805 22E 5%
R203		036-16820-10	RES M/F 0805 820K 1%
R204		036-12220-00	RES M/F 0805 22E 5%
R205		036-15820-00	RES M/F 0805 82K 5%
R206		036-15220-00	RES M/F 0805 22K 5%
R207		036-15330-10	RES M/F 0805 33K 1%
*R208	20-1021	036-12220-00	RES M/F 0805 22E 5%
*R208	26-1021	036-12220-00	RES M/F 0805 22E 5%
R209		036-12220-00	RES M/F 0805 22E 5%
R210		036-15390-10	RES M/F 0805 39K 1%
R211		036-14680-10	RES M/F 0805 6K8 1%
R212		036-12220-00	RES M/F 0805 22E 5%
R213		036-15390-10	RES M/F 0805 39K 1%
R214		036-12220-00	RES M/F 0805 22E 5%
R215		036-15100-10	RES M/F 0805 10K 1%
R216		036-15470-10	RES M/F 0805 47K 1%
R217		036-12220-00	RES M/F 0805 22E 5%
*R218	20-1021	036-12220-00	RES M/F 0805 22E 5%
*R218	26-1021	036-12220-00	RES M/F 0805 22E 5%
R219		036-14180-00	RES M/F 0805 1K8 5%
R220		036-15470-10	RES M/F 0805 47K 1%
R221		036-14180-00	RES M/F 0805 1K8 5%
R222		036-12100-10	RES M/F 0805 10E 1%
R223		036-12220-00	RES M/F 0805 22E 5%
*R224	20-1021	036-12220-00	RES M/F 0805 22E 5%
*R224	26-1020	036-12220-00	RES M/F 0805 22E 5%
*R224	26-1021	036-12220-00	RES M/F 0805 22E 5%
R225		036-15470-10	RES M/F 0805 47K 1%
R226		036-15470-10	RES M/F 0805 47K 1%
*%R240	20-1021	036-10000-00	RES M/F 0805 ZERO OHM
*%R240	26-1021	036-10000-00	RES M/F 0805 ZERO OHM
*%R243	20-1021	036-10000-00	RES M/F 0805 ZERO OHM
*%R243	26-1021	036-10000-00	RES M/F 0805 ZERO OHM
*%R244	20-1021	036-10000-00	RES M/F 0805 ZERO OHM
*%R244	26-1021	036-10000-00	RES M/F 0805 ZERO OHM
*%R246	20-1021	036-10000-00	RES M/F 0805 ZERO OHM
*%R246	26-1021	036-10000-00	RES M/F 0805 ZERO OHM
*%R247	20-1021	036-10000-00	RES M/F 0805 ZERO OHM
*%R247	26-1021	036-10000-00	RES M/F 0805 ZERO OHM
R302		036-15220-00	RES M/F 0805 22K 5%
R304		036-14270-10	RES M/F 0805 2K7 1%
R306		036-15100-10	RES M/F 0805 10K 1%
R308		036-16100-10	RES M/F 0805 100K 1%
R310		036-15220-00	RES M/F 0805 22K 5%
R312		036-14150-10	RES M/F 0805 1K5 1%
R314		036-13100-10	RES M/F 0805 100E 1%
R316		036-15100-10	RES M/F 0805 10K 1%
R318		036-14220-00	RES M/F 0805 2K2 5%
R320		036-14100-10	RES M/F 0805 1K 1%
R322		036-12220-00	RES M/F 0805 22E 5%
R324		036-13470-00	RES M/F 0805 470E 5%
R326		036-13470-00	RES M/F 0805 470E 5%
R328		036-13470-00	RES M/F 0805 470E 5%
R330		036-12220-00	RES M/F 0805 22E 5%
R332		036-15470-10	RES M/F 0805 47K 1%
R334		036-15100-10	RES M/F 0805 10K 1%
R336		036-14100-10	RES M/F 0805 1K 1%
R340		036-16100-10	RES M/F 0805 100K 1%
R342		036-12390-00	RES M/F 0805 39E 5%
R344		036-13150-10	RES M/F 0805 150E 1%
R345		036-12220-00	RES M/F 0805 22E 5%
R346		036-14150-10	RES M/F 0805 1K5 1%
R348		036-12470-00	RES M/F 0805 47E 5%
R350		036-13560-10	RES M/F 0805 560E 1%
R352		036-13330-00	RES M/F 0805 330E 5%
R354		036-14100-10	RES M/F 0805 1K 1%
R358		036-12470-00	RES M/F 0805 47E 5%
R359		036-13150-10	RES M/F 0805 150E 1%
R360		036-12120-00	RES M/F 0805 12E 5%
R362		036-11470-00	RES M/F 0805 4E7 10%
R364		036-14150-10	RES M/F 0805 1K5 1%
R366		036-14150-10	RES M/F 0805 1K5 1%
R368		036-14150-10	RES M/F 0805 1K5 1%
R372		036-14150-10	RES M/F 0805 1K5 1%

Ref	Var	IPN	Description
R375		036-11330-00	RES M/F 0805 3E3 5%
R377		036-14100-10	RES M/F 0805 1K 1%
R378		036-14100-10	RES M/F 0805 1K 1%
R379		036-14120-00	RES M/F 0805 1K2 5%
R380		036-13180-00	RES M/F 0805 180E 5%
R381		036-13180-00	RES M/F 0805 180E 5%
R382		036-15470-10	RES M/F 0805 47K 1%
R384		036-15150-00	RES M/F 0805 15K 5%
R385		036-16120-10	RES M/F 0805 120K 1%
R386		036-14100-10	RES M/F 0805 1K 1%
R387		036-14180-00	RES M/F 0805 1K8 5%
R388		036-15150-00	RES M/F 0805 15K 5%
R389		036-14180-00	RES M/F 0805 1K8 5%
R390		036-15150-00	RES M/F 0805 15K 5%
R391		036-14180-00	RES M/F 0805 1K8 5%
R394		036-14470-10	RES M/F 0805 4K7 1%
R396		036-14100-10	RES M/F 0805 1K 1%
R502		036-13330-00	RES M/F 0805 330E 5%
R505		036-15150-00	RES M/F 0805 15K 5%
R510		036-13680-00	RES M/F 0805 680E 5%
R515		036-12560-00	RES M/F 0805 56E 5%
R520		036-16120-10	RES M/F 0805 120K 1%
R525		036-15470-10	RES M/F 0805 47K 1%
R530		036-15220-00	RES M/F 0805 22K 5%
R535		036-15100-10	RES M/F 0805 10K 1%
R540		036-14220-00	RES M/F 0805 2K2 5%
R545		036-14470-10	RES M/F 0805 4K7 1%
%R550	20-1020	036-14470-10	RES M/F 0805 4K7 1%
%R550	20-1021	036-14470-10	RES M/F 0805 4K7 1%
%R550	26-1020	036-14470-10	RES M/F 0805 4K7 1%
%R550	26-1021	036-14470-10	RES M/F 0805 4K7 1%
R555		036-14470-10	RES M/F 0805 4K7 1%
R560		036-14120-00	RES M/F 0805 1K2 5%
R609		036-14100-10	RES M/F 0805 1K 1%
R613		036-13560-10	RES M/F 0805 560E 1%
R615		036-13100-10	RES M/F 0805 100E 1%
R617		036-10000-00	RES M/F 0805 ZERO OHM
R619		036-01100-10	RES 1 OHM 1 WATT 2512 CHIP
R621		036-01100-10	RES 1 OHM 1 WATT 2512 CHIP
R625		036-14100-10	RES M/F 0805 1K 1%
R629		036-03270-10	RES 270 OHM 1 WATT 2512 CHIP
R633		036-14680-10	RES M/F 0805 6K8 1%
R637		036-12220-00	RES M/F 0805 22E 5%
R638		036-12220-00	RES M/F 0805 22E 5%
R640		036-12100-10	RES M/F 0805 10E 1%
R641		036-14150-10	RES M/F 0805 1K5 1%
R645		036-13470-00	RES M/F 0805 470E 5%
R649		036-14470-10	RES M/F 0805 4K7 1%
R653		036-15100-10	RES M/F 0805 10K 1%
R655		036-10000-00	RES M/F 0805 ZERO OHM
R656		036-10000-00	RES M/F 0805 ZERO OHM
R681		036-13100-10	RES M/F 0805 100E 1%
R685		036-15150-00	RES M/F 0805 15K 5%
R689		036-12100-10	RES M/F 0805 10E 1%
R693		036-16100-10	RES M/F 0805 100K 1%
R696		036-15560-10	RES MF 0805 56K 1%
R709		036-12100-10	RES M/F 0805 10E 1%
R710		036-13100-10	RES M/F 0805 100E 1%
R711		036-13100-10	RES M/F 0805 100E 1%
R734		036-13470-00	RES M/F 0805 470E 5%
R735		036-13470-00	RES M/F 0805 470E 5%
R736		036-13470-00	RES M/F 0805 470E 5%
R742		036-13150-10	RES M/F 0805 150E 1%
R743		036-13150-10	RES M/F 0805 150E 1%
R744		036-12220-00	RES M/F 0805 22E 5%
R746		036-12220-00	RES M/F 0805 22E 5%
R747		036-12220-00	RES M/F 0805 22E 5%
R748		036-15470-10	RES M/F 0805 47K 1%
R749		036-15470-10	RES M/F 0805 47K 1%
R750		036-12220-00	RES M/F 0805 22E 5%
R752		036-12680-00	RES M/F 0805 68E 5%
R753		036-17220-00	RES M/F 0805 2M2 5%
R754		036-14100-10	RES M/F 0805 1K 1%
R756		036-15120-00	RES M/F 0805 12K 5%
R757		036-15120-00	RES M/F 0805 12K 5%
R758		036-14120-00	RES M/F 0805 1K2 5%
R759		036-13330-00	RES M/F 0805 330E 5%
R760		036-13180-00	RES M/F 0805 180E 5%
R762		036-13100-10	RES M/F 0805 100E 1%
R763		036-13100-10	RES M/F 0805 100E 1%
R765		036-13680-00	RES M/F 0805 680E 5%
R766		036-14100-10	RES M/F 0805 1K 1%
R767		036-13680-00	RES M/F 0805 680E 5%
R769		036-13180-00	RES M/F 0805 180E 5%
R771		036-14820-10	RES M/F 0805 8K2 1%
R772		036-15220-00	RES M/F 0805 22K 5%
R774		036-14820-10	RES M/F 0805 8K2 1%
R775		036-14680-10	RES M/F 0805 6K8 1%
R784		036-12680-00	RES M/F 0805 68E 5%
R785		036-14330-10	RES M/F 0805 3K3 1%
R786		036-12100-10	RES M/F 0805 10E 1%
R787		036-12100-10	RES M/F 0805 10E 1%
R790		036-13220-10	RES 0805 220E 1%
R791		036-13100-10	RES M/F 0805 100E 1%
R792		036-14100-10	RES M/F 0805 1K 1%
R808		036-12100-10	RES M/F 0805 10E 1%
R809		036-14470-10	RES M/F 0805 4K7 1%
R810		036-14470-10	RES M/F 0805 4K7 1%
R811		036-14470-10	RES M/F 0805 4K7 1%
R812		036-14470-10	RES M/F 0805 4K7 1%
R813		036-14470-10	RES M/F 0805 4K7 1%
R815		036-15470-10	RES M/F 0805 47K 1%
R816		036-16150-00	RES M/F 0805 150K 5%
R818		036-14470-10	RES M/F 0805 4K7 1%
R819		036-14470-10	RES M/F 0805 4K7 1%
R821		036-15470-10	RES M/F 0805 47K 1%
R822		036-15470-10	RES M/F 0805 47K 1%
*R824	20-1021	036-14220-00	RES M/F 0805 2K2 5%
*R824	26-1021	036-14220-00	RES M/F 0805 2K2 5%
*R825	20-1021	036-14220-00	RES M/F 0805 2K2 5%
*R825	26-1021	036-14220-00	RES M/F 0805 2K2 5%
*R826	20-1021	036-14220-00	RES M/F 0805 2K2 5%
*R826	26-1021	036-14220-00	RES M/F 0805 2K2 5%
*R827	20-1021	036-14220-00	RES M/F 0805 2K2 5%
*R827	26-1021	036-14220-00	RES M/F 0805 2K2 5%
*R828	20-1021	036-14220-00	RES M/F 0805 2K2 5%
*R828	26-1021	036-14220-00	RES M/F 0805 2K2 5%
*R829	20-1021	036-14220-00	RES M/F 0805 2K2 5%
*R829	26-1021	036-14220-00	RES M/F 0805 2K2 5%
*R830	20-1021	036-14220-00	RES M/F 0805 2K2 5%
*R830	26-1021	036-14220-00	RES M/F 0805 2K2 5%
*R831	20-1021	036-14220-00	RES M/F 0805 2K2 5%
*R831	26-1021	036-14220-00	RES M/F 0805 2K2 5%
*R832	20-1021	036-14220-00	RES M/F 0805 2K2 5%
*R832	26-1021	036-14220-00	RES M/F 0805 2K2 5%
*R833	20-1021	036-14220-00	RES M/F 0805 2K2 5%
*R833	26-1021	036-14220-00	RES M/F 0805 2K2 5%
*R835	20-1021	036-14220-00	RES M/F 0805 2K2 5%
*R835	26-1021	036-14220-00	RES M/F 0805 2K2 5%
*R836	20-1021	036-14220-00	RES M/F 0805 2K2 5%
*R836	26-1021	036-14220-00	RES M/F 0805 2K2 5%
*R837	20-1021	036-14220-00	RES M/F 0805 2K2 5%
*R837	26-1021	036-14220-00	RES M/F 0805 2K2 5%
*R840	20-1021	036-14220-00	RES M/F 0805 2K2 5%
*R840	26-1021	036-14220-00	RES M/F 0805 2K2 5%
*R841	20-1021	036-14220-00	RES M/F 0805 2K2 5%
*R841	26-1021	036-14220-00	RES M/F 0805 2K2 5%
*R842	20-1021	036-14220-00	RES M/F 0805 2K2 5%
*R842	26-1021	036-14220-00	RES M/F 0805 2K2 5%
R845		036-13470-00	RES M/F 0805 470E 5%
R846		036-13470-00	RES M/F 0805 470E 5%
R847		036-13470-00	RES M/F 0805 470E 5%
R848		036-14470-10	RES M/F 0805 4K7 1%
R849		036-13470-00	RES M/F 0805 470E 5%
R853		036-14470-10	RES M/F 0805 4K7 1%
R854		036-14470-10	RES M/F 0805 4K7 1%
RV100		042-05100-05	RES PRESET SMD 10K CER 4MM SQ
RV101		042-05500-05	RES PRESET SMD 50K CER 4MM SQ
RV102		042-05100-05	RES PRESET SMD 10K CER 4MM SQ
SK200		240-10000-07	CONN SMD SKT 16W 2R M-MATCH
*SK220	20-1021	240-02100-44	SKT COAX MINI JACK PCB MT ANG.
*SK220	26-1021	240-02100-44	SKT COAX MINI JACK PCB MT ANG.
*SK805	20-1021	240-10000-07	CONN SMD SKT 16W 2R M-MATCH
*SK805	26-1021	240-10000-07	CONN SMD SKT 16W 2R M-MATCH
SK810		240-04020-42	SKT 44 PIN SMD PLCC
T610		050-15119-52	COIL SMD 680uH XFMR 5119-T052
%X100	20-1020	539-00010-55	TCXO 12.8M 1PPM-20+70/2PPM -30
%X100	20-1021	539-00010-45	VCTCXO 12.8MHZ +-1.5PPM-30+70C
%X100	26-1020	539-00010-55	TCXO 12.8M 1PPM-20+70/2PPM -30
%X100	26-1021	539-00010-45	VCTCXO 12.8MHZ +-1.5PPM-30+70C
X101		539-00010-46	VCTCXO 12.8MHZ 3.0PPM -30 +75C

Copyright TEL

T837 Mechanical & Miscellaneous Parts (IPN 220-01585-01)

IPN	Description	IPN	Description
220-01585-01	POCSAG PAGING EXCITER PCB		
240-02100-06	SKT COAX N TYPE PNL MTG OP-TER		
240-04021-77	SKT JACK 1.3 PCB MT 64W		
303-11169-04	CHASSIS PAINTED T800 SER II		
303-23118-00	COVER A3M2247 D RANGE T855/7		
303-50074-00	CLIP SPRING XSTR CLAMP T857		
308-01007-01	HANDLE BS SII 2 WASHERS INC		
312-01052-02	LID TOP T800 SER II PTND		
312-01053-02	LID BOTTOM T800 SER II PNTD		
316-06727-00	PNL FRT T800 SII PAGING		
349-00020-36	SCREW TT M3X8m PANTORX BLK		
349-00020-36	SCREW TT M3X8m PANTORX BLK		
349-00020-43	SCRW T/T M4X12MM P/POZ BZ		
349-00020-45	SCRW T/T M4X20MM P/POZ BZ		
349-00020-55	SCRW M3*8 P/P T/T BLCKZNC CHRM		
352-00010-08	NUT M3 COLD FORM HEX ST BZ		
352-00010-29	NUT M4 NYLOC HEX		
353-00010-13	WSHR M3 S/PROOF INT BZ		
353-00010-24	WSHR M4x8mm Flat ST BZ		
362-00010-33	GROMMET LED MTG 3MM		
362-01101-00	GASKET INSUL SIL PAD 2000 TO5		

Copyright TEL

T837 Grid Reference Index (IPN 220-01585-01)

How To Use This Grid Reference Index

The first digit in the PCB layout reference is a "1" or "2", indicating the top or bottom side layout respectively, and the last two characters give the location of the component on that diagram.

The first digit in the circuit diagram reference is the sheet number, and the last two characters give the location of the component on that sheet.

Device	PCB	Circuit
C100	1:C4	2-A9
C101	1:B5	2-A7
C102	1:D3	2-A4
C103	1:D2	2-A2
C104	1:D7	2-A0
C105	1:B5	2-B8
C106	1:A5	2-B7
*C107	1:C4	2-B9
C108	1:B5	2-B8
C109	1:B5	2-C6
*C110	1:C2	2-D1
*C111	1:C3	2-D1
C112	1:C6	2-D8
%C113	1:C8	2-E4
C115	1:A5	2-C7
*C122	1:C2	2-E1
C123	1:C6	2-E0
*C124	1:C3	2-F0
%C125	1:C9	2-F5
*C126	1:C3	2-F0
*C127	1:C2	2-F3
%C128	1:C9	2-F5
%C129	1:C9	2-G5
*C130	1:B2	2-G3
*C131	1:B3	2-G0
*C132	1:B3	2-G1
*C133	1:B2	2-G2
*C134	1:B3	2-H2
*C135	1:B3	2-H1
*%C136	1:D9	2-H5
%C137	1:D8	2-H5
C138	1:B6	2-H8
C139	1:B6	2-H7
*C140	1:C4	2-J0
C141	1:B6	2-J7
C142	1:B7	2-J9
*C143	1:B4	2-K2
C144	1:B7	2-K7
*C145	1:B4	2-K2
*C146	1:B3	2-K3
*C147	1:B2	2-L3
C148	1:D7	2-L1
C149	1:B6	2-M3
C150	1:C7	2-M2
C151	1:A6	2-M3
C152	1:B8	2-N7
C153	1:B8	2-N8
C154	1:B7	2-N2
C155	1:B8	2-N8
C156	1:B6	2-N3
*C157	1:C4	2-P2
C158	1:A6	2-P3
C159	1:C5	2-P4
C160	1:D4	2-P4
C161	1:B6	2-Q2
C162	1:C6	2-Q3
C163	1:B4	2-Q6
C164	1:C8	2-Q2
*C165	1:C3	2-Q3

Device	PCB	Circuit
C166	1:D4	2-Q4
C167	1:D4	2-R4
C168	1:C8	2-R4
*C169	1:C3	2-R3
C170	1:D8	2-R2
*C171	1:D8	2-R0
C172	1:D8	2-R2
*C173	1:D8	2-R0
C301	1:E8	3-A8
C304	1:F8	3-D9
C307	1:F8	3-C8
C309	1:F4	3-Q8
C310	1:F8	3-D8
C313	1:F7	3-G8
C317	1:F7	3-E8
C318	1:F7	3-F9
C319	1:F8	3-H9
C325	1:E5	3-K3
C328	1:E5	3-L4
C330A	1:F7	3-N8
C330B	1:F7	3-N8
C331	1:E6	3-L4
C334	1:E6	3-P4
C337	1:E6	3-Q4
C340	1:F5	3-C2
C343	1:F5	3-E3
C346	1:F4	3-D0
C349	1:F5	3-F1
C352	1:F5	3-G2
C355	1:F5	3-G2
C358	1:F5	3-H2
C361	1:E5	3-K3
%C370	1:E6	3-L2
C376	1:E7	3-P3
C379	1:E7	3-Q3
C382	1:F5	3-F1
C383	1:E6	3-L3
C384	1:E6	3-L2
C385	1:F6	3-B5
C388	1:E8	3-D6
C390	1:F7	3-D4
C391	1:E7	3-P3
C392	1:E7	3-F5
C393	1:E8	3-G6
C394	1:E7	3-F5
C395	1:F6	3-J6
C397	1:F6	3-J5
C398	1:E7	3-R4
C503	1:K6	5-M8
C505	1:K6	5-M6
C510	1:J5	5-E3
C513	1:H5	5-G4
C535	1:K5	5-M4
C550	1:K4	5-L2
C605	1:L6	6-D8
C610A	1:M5	6-F8
C610B	1:M5	6-G8
C611A	1:M6	6-H8
C611B	1:M5	6-J8

Device	PCB	Circuit
C623	1:N6	6-N8
C625	1:M6	6-Q8
C626	1:M6	6-R8
C628	1:M6	6-R8
C630	1:N5	6-K5
C631	1:N5	6-M6
C634	1:N5	6-M4
C636	1:M5	6-M4
C638	1:M6	6-P5
C640	1:M5	6-R6
C660	1:L5	6-K0
C665	1:L5	6-K0
C670	1:L5	6-L0
C673	1:L5	6-P2
C677	1:L6	6-P0
C681	1:L6	6-R2
C684	1:L6	6-R2
C687	1:M6	6-Q1
C690	1:L6	6-R0
C693	1:L6	6-R0
C706	1:J2	7-B5
C708	1:J2	7-C9
C709	1:K4	7-D9
C710	1:J3	7-D8
C712	1:H2	7-E7
C713	1:H2	7-E6
C714	1:J3	7-E8
C733	1:H2	7-E3
C735	1:J2	7-A1
C736	1:J2	7-B1
C740A	1:H2	7-B4
C740B	1:H2	7-B3
C741A	1:H2	7-C4
C741B	1:G2	7-C3
C742A	1:H2	7-D4
C742B	1:H3	7-D3
C743	1:H2	7-B1
C745	1:G3	7-D1
C750	1:H4	7-F8
C757	1:G4	7-F5
C759	1:G4	7-G4
C761	1:G3	7-J4
C762	1:G3	7-J4
C764	1:H3	7-H2
C765	1:G3	7-J2
C767	1:H3	7-K3
C769	1:H4	7-M4
C770	1:J4	7-N4
C772	1:G4	7-M2
C774	1:H4	7-P2
C776	1:H4	7-N1
C782	1:G2	7-N1
C784	1:G2	7-R1
C786	1:G2	7-R1
C788	1:G3	7-P0
C790	1:G3	7-Q0
C792	1:G3	7-R1
C810	1:L3	8-K8
C812	1:L2	8-F5

Device	PCB	Circuit
C813	1:N3	8-J4
C910	1:P7	9-E5
C920	1:P7	9-F5
C930	1:P6	9-G5
%D1	1:P5	1-Q1
%D2	1:P5	1-R1
*D100	1:B4	2-B9
*D100	1:B4	2-B9
D105	1:A4	2-B7
D105	1:A4	2-B7
*D116	1:C1	2-H3
D119	1:A7	2-Q8
D120	1:A6	2-J8
D120	1:A6	2-J8
D125	1:A8	2-R6
D130	1:D3	2-B4
D130	1:D3	2-B4
D135	1:D2	2-B2
D135	1:D2	2-B2
D140	1:C6	2-A0
D140	1:C6	2-A0
D160	1:D7	2-B0
D160	1:D7	2-B0
*D200	1:B2	2-G2
*D200	1:B2	2-G2
*D220	1:C3	2-F0
*D220	1:C3	2-F0
D340	1:F5	3-D2
D350	1:F5	3-E2
D360	1:F5	3-E2
D370	1:F7	3-M8
D610	1:N6	6-K6
D610	1:N6	6-L6
D640	1:L5	6-M1
D640	1:L5	6-M1
D645	1:M5	6-R6
D730	1:H3	7-H1
D740	1:H3	7-J2
IC100	1:C6	2-L0
IC100	1:C6	2-L3
IC100	1:C6	2-D0
IC100	1:C6	2-D8
IC100	1:C6	2-D8
IC100	1:C6	2-C8
IC100	1:C6	2-C8
IC102	1:B6	2-C6
IC102	1:B6	2-L1
IC102	1:B6	2-M3
IC102	1:B6	2-C7
IC102	1:B6	2-D6
IC102	1:B6	2-L1
IC102	1:B6	2-M1
IC105	1:C6	2-E8
IC105	1:C6	2-F8
IC105	1:C6	2-N3
IC110	1:B6	2-E6
IC110	1:B6	2-F6

Copyright TEL

Device	PCB	Circuit
IC110	1:B6	2-P3
IC115	1:C6	2-C4
IC115	1:C6	2-D0
IC115	1:C6	2-H9
IC115	1:C6	2-H7
IC115	1:C6	2-P3
IC120	1:B7	2-K9
IC120	1:B7	2-K6
IC120	1:B7	2-K8
IC120	1:B7	2-K7
IC120	1:B7	2-P2
IC125	1:C8	2-N6
IC125	1:C8	2-Q2
IC125	1:C8	2-M5
IC125	1:C8	2-N5
IC125	1:C8	2-P7
IC140	1:C7	2-N1
IC140	1:C7	2-L1
IC140	1:C7	2-L8
IC140	1:C7	2-D4
IC140	1:C7	2-P1
IC150	1:B7	2-J5
IC150	1:B7	2-L6
IC150	1:B7	2-M1
IC150	1:B7	2-L8
*IC160	1:C3	2-N1
*IC160	1:C3	2-J1
*IC160	1:C3	2-Q1
*IC160	1:C3	2-Q1
*IC200	1:B2	2-E1
*IC210	1:B3	2-G3
*IC210	1:B3	2-G1
*IC210	1:B3	2-K3
*IC220	1:C3	2-H0
*IC220	1:C3	2-Q3
*IC220	1:C3	2-D0
*IC220	1:C3	2-E0
*IC220	1:C3	2-G0
*IC220	1:C3	2-G0
*IC220	1:C3	2-E0
*IC230	1:D9	2-H5
*IC230	1:D9	2-G0
*IC230	1:D9	2-R0
IC240	1:C8	2-J0
IC240	1:C8	2-L0
IC240	1:C8	2-E5
IC240	1:C8	2-R2
IC240	1:C8	2-G4
IC250	1:D4	2-Q5
IC330	1:F8	3-E9
IC330	1:F8	3-M8
IC330	1:F8	3-M0
IC610	1:L5	6-G8
IC630	1:N5	6-K5
IC640	1:M5	6-N5
IC640	1:M5	6-R6
IC640	1:M5	6-N3
IC650	1:L5	6-D4
IC710	1:J2	7-D6
IC710	1:J2	7-D8
IC710	1:J2	7-D7
IC710	1:J2	7-D6
IC710	1:J2	7-C6
IC710	1:J2	7-G0
IC710	1:J2	7-G0
IC740	1:H2	7-D1
IC750	1:H4	7-M3
IC750	1:H4	7-H5
IC750	1:H4	7-F8
IC820	1:L4	8-N2
L335	1:F5	3-E3
L340	1:F5	3-F2
L345	1:F5	3-H2
L346	1:E5	3-H2
L355	1:E5	3-K3

Device	PCB	Circuit
L360	1:E6	3-K3
L365	1:E6	3-M3
L370	1:F6	3-N2
L375	1:E6	3-M4
L380	1:E6	3-N4
L385	1:E7	3-P3
L390	1:E7	3-R4
L750	1:G4	7-R0
L910	1:P7	9-F6
L920	1:P7	9-G6
MICROSTR	2:L8	1 -G8
P100	1:P6	1-R8
P101	1:D3	2-A4
P103	1:D2	2-A2
P105	1:D8	2-J0
%P106	1:C1	2-J2
P810	1:L3	8-A5
*P820	1:L4	8-M8
*P825	1:L4	8-M8
*P830	1:L4	8-M8
*P835	1:L4	8-M7
*P840	1:L4	8-M7
PL100	1:P3	1-F0
Q100	1:D3	2-C4
Q101	1:D2	2-C2
Q102	1:C7	2-C0
Q103	1:C6	2-F0
*Q104	1:C3	2-J0
Q105	1:A7	2-Q8
Q305	1:E8	3-B8
Q310	1:F8	3-G8
Q315	1:F8	3-J8
Q320	1:F6	3-A5
Q325	1:F7	3-C5
Q330	1:F7	3-D4
Q335	1:E7	3-E6
Q340	1:E7	3-G6
Q345	1:F6	3-H6
Q365	1:E5	3-J2
Q370	2:E6	3-N3
Q510	1:J5	5-F3
Q520	1:J5	5-H4
Q530	1:J5	5-H3
Q540	1:K5	5-L4
Q550	1:K5	5-L3
Q610	1:L6	6-E8
Q620	1:N6	6-P8
Q630	1:M6	6-P5
Q660	1:L5	6-N1
Q670	1:M6	6-Q1
Q750	1:G4	7-F3
Q760	1:H3	7-H3
Q770	1:H3	7-H1
Q775	1:H3	7-K3
Q780	1:H3	7-K3
Q785	1:H3	7-K2
Q790	1:H3	7-L3
Q795	1:G3	7-P1
Q820	1:L2	8-D5
Q830	1:L2	8-D5
Q840	1:L2	8-F5
Q850	1:M2	8-G5
Q860	1:L4	8-B3
R100	1:C6	2-A0
R101	1:C4	2-A9
R102	1:B4	2-A8
R103	1:D7	2-A0
R104	1:D3	2-A4
R105	1:D2	2-A2
R106	1:D3	2-B4
R107	1:D7	2-B0

Device	PCB	Circuit
R108	1:D2	2-B2
R109	1:B5	2-B8
R110	1:D3	2-C4
R111	1:D2	2-C2
R112	1:C7	2-C0
R113	1:C7	2-C4
R114	1:C5	2-C8
R115	1:A5	2-C7
R116	1:B5	2-C6
R117	1:C7	2-C0
R118	1:B5	2-C7
R119	1:C7	2-C0
R120	1:C7	2-C5
R122	1:C7	2-D0
R123	1:C7	2-D5
*R124	1:C2	2-D1
*R125	1:C3	2-D1
R126	1:C7	2-D4
R127	1:C6	2-D9
*R128	1:C3	2-D0
R129	1:C8	2-D4
R130	1:C6	2-E0
R131	1:C8	2-E5
R132	1:C6	2-E0
*R133	1:C2	2-E3
%R134	1:C8	2-E4
*R135	1:C3	2-E0
R136	1:C6	2-F0
%R137	1:C8	2-F5
%R138	1:C8	2-F4
%R139	1:C9	2-F5
%R140	1:C8	2-F5
*R141	1:B3	2-F0
*R142	1:C3	2-G0
*R143	1:B2	2-G2
*R144	1:B3	2-G1
*R145	1:B2	2-G2
*R146	1:C3	2-G2
*R147	1:B2	2-G3
%R148	1:C9	2-G5
R149	1:D8	2-H6
*%R150	1:D9	2-H5
*R151	1:B3	2-H2
*R152	1:C3	2-H2
R153	1:C8	2-H0
*R154	1:C2	2-H3
R155	1:C6	2-H9
R156	1:B6	2-H7
%R157	1:C8	2-H0
*R158	1:C3	2-H2
*R159	1:B3	2-J1
*R160	1:C3	2-H0
*R161	1:C3	2-H2
R162	1:C9	2-H0
R163	1:B6	2-J7
R164	1:B7	2-J9
R165	1:B7	2-J8
*R166	1:C4	2-J0
*R167	1:B4	2-J2
R168	1:D7	2-J6
R169	1:D7	2-J5
R170	1:D7	2-J4
R171	1:D7	2-J4
R172	1:B7	2-J8
%R173	1:C3	2-J2
*R174	1:C3	2-J0
*R175	1:B4	2-J2
R176	1:B7	2-K8
R177	1:B7	2-K8
R178	1:B7	2-K7
*R179	1:B4	2-K2
R180	1:B7	2-K6
R181	1:B7	2-K6
R182	1:B7	2-K8
R183	1:C7	2-K8
R184	1:C8	2-K0

Device	PCB	Circuit
R185	1:D8	2-K0
R186	1:B7	2-K5
R187	1:C8	2-K5
R188	1:B7	2-K7
*R189	1:B2	2-K3
R190	1:C7	2-L7
R191	1:C8	2-L0
R192	1:B7	2-L8
R193	1:B6	2-L3
R194	1:D8	2-L0
R195	1:D7	2-L2
R196	1:B8	2-M7
R197	1:C8	2-M2
R198	1:A6	2-M3
R199	1:B8	2-M8
R200	1:B8	2-M8
R201	1:C8	2-M5
R202	1:B7	2-N2
R203	1:B8	2-N6
R204	1:B6	2-N3
R205	1:B8	2-N8
R206	1:C8	2-N5
R207	1:B8	2-N6
*R208	1:C4	2-N2
R209	1:A6	2-P3
R210	1:B8	2-P7
R211	1:B8	2-P5
R212	1:B6	2-P2
R213	1:B8	2-P7
R214	1:C6	2-P3
R215	1:B4	2-Q7
R216	1:A6	2-Q7
R217	1:C8	2-Q2
*R218	1:C4	2-Q3
R219	1:B7	2-Q8
R220	1:A7	2-R7
R221	1:B8	2-R7
R222	1:D4	2-R5
R223	1:D8	2-R2
*R224	1:D8	2-R0
R225	1:D4	2-R5
R226	1:C8	2-R4
*%R240	1:B2	2-E2
*%R241	1:B2	2-E2
*%R242	1:B2	2-E2
*%R243	1:A2	2-E2
*%R244	1:A2	2-E2
*%R245	1:B2	2-E2
*%R246	1:B2	2-E2
*%R247	1:B2	2-E1
R302	1:E8	3-A7
R304	1:E8	3-B7
R306	1:F8	3-C8
R308	1:F8	3-C9
R310	1:F8	3-C9
R312	1:F7	3-D8
R314	1:F7	3-D7
R316	1:F8	3-E8
R318	1:F7	3-E9
R320	1:F8	3-G9
R322	1:F8	3-H8
R324	1:E8	3-J8
R326	1:E7	3-J7
R328	1:F8	3-K8
R330	1:F7	3-M8
R332	1:F7	3-C5
R334	1:E7	3-D6
R336	1:F7	3-D5
R340	1:F6	3-D5
R342	1:F5	3-C2
R344	1:F4	3-C2
R345	1:F7	3-F7
R346	1:F5	3-D2
R348	1:F5	3-D1
R350	1:F5	3-E1
R352	1:E5	3-J2

Device	PCB	Circuit
R354	1:E5	3-J2
R358	1:E6	3-M2
R359	1:F4	3-B2
R360	1:E7	3-Q3
R362	1:E7	3-Q3
R364	1:E7	3-P2
R366	1:E7	3-Q2
R368	1:F5	3-G1
R372	1:F5	3-D0
R375	1:E5	3-L4
R377	1:E5	3-J3
R378	1:F7	3-D4
R379	1:E5	3-J3
R380	1:E5	3-J4
R381	1:E5	3-K4
R382	1:E7	3-F6
R384	1:E7	3-F5
R385	1:F7	3-F6
R386	1:F6	3-K6
R387	1:E6	3-M4
R388	1:F6	3-J6
R389	1:E6	3-N4
R390	1:F6	3-J6
R391	1:E6	3-N4
R394	1:E7	3-G5
R396	1:E7	3-H5
R502	1:K6	5-N8
R505	1:K6	5-M7
R510	1:K6	5-M7
R515	1:H6	5-E2
R520	1:J5	5-E3
R525	1:J5	5-E3
R530	1:J5	5-E3
R535	1:J5	5-F3
R540	1:K5	5-H4
R545	1:K5	5-J3
%R550	1:K5	5-J4
%R553	1:K5	5-K3
R555	1:K5	5-K3
R560	1:K5	5-M2
R609	1:L6	6-B8
R613	1:L6	6-C8
R615	1:M5	6-F9
R617	1:M5	6-J8
R619	1:N6	6-L8
R621	1:N6	6-L8
R625	1:N6	6-L7
R629	1:M6	6-P6
R633	1:M5	6-Q8
R637	1:N5	6-K6
R638	1:N5	6-K6
R640	1:M5	6-R6
R641	1:N5	6-L4
R645	1:N5	6-L5
R649	1:M5	6-M5
R653	1:M5	6-Q4
R655	1:L4	6-B4
R656	1:L4	6-B4
R681	1:L5	6-L1
R685	1:L5	6-N2
R689	1:L6	6-Q2
R693	1:L5	6-Q0
R696	1:L6	6-Q0
R709	1:J2	7-D8
R710	1:H2	7-E7
R711	1:J2	7-B6
R734	1:K2	7-A2
R735	1:K2	7-A2
R736	1:K2	7-A2
R742	1:H2	7-B4
R743	1:H2	7-C5
R744	1:G2	7-D4
R746	1:H3	7-E4
R747	1:H3	7-E5
R748	1:J2	7-A1
R749	1:J2	7-B1

Device	PCB	Circuit
R750	1:H4	7-F9
R752	1:G4	7-F5
R753	1:G4	7-F3
R754	1:G3	7-F3
R756	1:G3	7-G5
R757	1:G4	7-G4
R758	1:H3	7-H4
R759	1:H3	7-H4
R760	1:H3	7-K4
R762	1:H3	7-K4
R763	1:H3	7-L4
R765	1:H3	7-H2
R766	1:G3	7-J3
R767	1:H3	7-K2
R769	1:H3	7-K3
R771	1:H4	7-L3
R772	1:G4	7-M2
R774	1:H4	7-M3
R775	1:H4	7-N2
R784	1:G3	7-P1
R785	1:G3	7-Q1
R786	1:G2	7-R1
R787	1:G2	7-R2
R790	1:G3	7-P0
R791	1:G3	7-Q0
R792	1:G3	7-Q0
R808	1:L2	8-B4
R809	1:L2	8-D5
R810	1:L3	8-D6
R811	1:L2	8-E6
R812	1:L2	8-D5
R813	1:L2	8-D4
R815	1:L2	8-F4
R816	1:L2	8-F4
R818	1:M2	8-F5
R819	1:M2	8-F5
R821	1:M4	8-B3
R822	1:M4	8-E3
*R824	1:L4	8-L8
*R825	1:L4	8-L8
*R826	1:L4	8-L8
*R827	1:L4	8-L7
*R828	1:L4	8-L7
*R829	1:L4	8-P9
*R830	1:L3	8-P9
*R831	1:L3	8-P9
*R832	1:L3	8-P8
*R833	1:L3	8-P8
*R835	1:L3	8-P8
*R836	1:L3	8-P8
*R837	1:L3	8-P7
*R840	1:L3	8-P7
*R841	1:L3	8-P7
*R842	1:L3	8-P6
R845	1:M4	8-Q5
R846	1:M4	8-Q4
R847	1:N3	8-Q4
R848	1:L2	8-J4
R849	1:N3	8-Q3
R853	1:M4	8-N3
R854	1:M4	8-N3
RV100	1:D8	2-J5
RV101	1:D7	2-J4
RV102	1:C9	2-N5
%RV300	1:F7	3-D7
SK200	1:C2	2-P0
*SK220	1:C2	2-C1
SK501	1:G6	5-D6
SK502	1:G6	5-D6
SK503	1:G6	5-D5
SK504	1:G5	5-D5
SK505	1:G5	5-D4
SK513	1:H5	5-H5
SK522	1:H6	5-E2

Device	PCB	Circuit
SK531	1:K6	5-N6
SK532	1:K5	5-N6
SK533	1:K5	5-N5
SK534	1:K5	5-N5
SK535	1:K5	5-N4
*SK805	1:K3	8-Q6
*SK805	1:K3	8-Q9
*SK805	1:K3	8-Q6
*SK805	1:K3	8-Q9
*SK805	1:K3	8-Q7
*SK805	1:K3	8-Q5
*SK805	1:K3	8-Q7
*SK805	1:K3	8-Q8
*SK805	1:K3	8-Q7
*SK805	1:K3	8-Q8
*SK805	1:K3	8-Q6
*SK805	1:K3	8-Q8
*SK805	1:K3	8-Q6
*SK805	1:K3	8-Q8
*SK805	1:K3	8-Q7
*SK805	1:K3	8-Q9
SK810	1:M3	8-H5
SL100	1:D6	2-A0
SL101	1:C7	2-C4
SL102	1:C7	2-C0
SL103	1:C7	2-D4
SL104	1:C6	2-D0
SL320	1:F7	3-E4
SL501	2:J5	5-G3
T610	1:L6	6-N1
TP100	1:A8	2-P8
TP101	1:B4	2-Q7
TP308	1:E7	3-G6
TP310	1:F6	3-L6
TP601	1:N5	6-K9
TP602	1:L6	6-R9
TP603	1:L5	6-J1
TP604	1:L4	6-M6
TP607	1:M5	6-J9
TP710	1:G4	7-H5
TP715	1:J2	7-C6
%X100	1:C5	2-A8
X101	1:B5	2-A7

Device	PCB	Circuit

Copyright TEL

Part D T838 & T839 Power Amplifiers

Caution: **There are no user serviceable components in these power amplifiers. Refer all servicing to your nearest Tait Dealer or Customer Service Organisation.**

This part of the manual is divided into five sections, as listed below. There is a detailed table of contents at the start of each section.

Section	Title
1	General Information
2	Circuit Operation
3	Initial Adjustment
4	Fault Finding
5	PCB Information

Copyright TEL

1 T838/839 General Information

This section provides a brief description of the T838/839 PA, along with detailed specifications and a list of types available.

The following topics are covered in this section.

Section	Title	Page
1.1	**Introduction**	**1.5**
1.2	**Specifications**	**1.6**
1.2.1	Introduction	1.6
1.2.2	General	1.6
1.2.3	Test Standards	1.7
1.2.3.1	European Telecommunication Standard (ETS)	1.7
1.2.3.2	DTI CEPT Recommendation T/R-24-01	1.8
1.2.3.3	Telecommunications Industry Association	1.8
1.2.3.4	Chinese Radio Regulatory Commission	1.8
1.3	**Product Codes**	**1.9**
1.4	**Paging Product Range**	**1.10**

Figure	Title	Page
1.1	T838/839 Main Circuit Block Identification	1.4
1.2	T838/839 Front Panel Controls	1.4

Copyright TEL

replace A4 pages D1.3/D1.4 with A3 pages D1.3/D1.4

replace A4 pages D1.3/D1.4 with A3 pages D1.3/D1.4

Copyright TEL

1.1 Introduction

The T838 & T839 are FM base station power amplifiers designed for single or multichannel operation in the 148 to 174MHz frequency range. The typical output power capabilities are as follows:

T838 -	10 to 60W
T839 -	20 to 120W.

The T838 PA comprises a single broad band RF power module whose output is filtered before being fed to the output socket.

The T839 PA comprises two broad band RF power modules whose outputs are recombined (using a quadrature hybrid combiner) and filtered before being fed to the output socket. This dual module design enables the transmitter to produce at least one quarter of its rated power if one of the modules fails.

VSWR and thermal protection is incorporated into the basic design, while monitoring and alarm signals are available for both forward and reverse power. The output power is adjustable from the front panel.

The main PCB is mounted directly on a die-cast chassis/heatsink. Extensive use is made of the latest surface mount technology. Effective RF isolation between the PA control circuitry and RF stages is achieved by internal metal shields.

Forced air cooling for the heatsink is provided on the T839 by a fan, which is activated whenever the transmitter is keyed. Thermal sensors will also activate the fan automatically if the internal temperature reaches an unacceptable level.

The T838 has a width of 60mm and occupies a single space in a Tait rack frame, which has the ability to accommodate up to seven standard modules. The T839 has a width of 120mm and occupies a double space.

1.2 Specifications

1.2.1 Introduction

The performance figures given are minimum figures, unless otherwise indicated, for equipment operating at standard room temperature (+22°C to +28°C) and standard test voltage (13.8V DC).

Where applicable, the test methods used to obtain the following performance figures are those described in the ETS and Chinese GB/T 15938 specifications. Refer to Section 1.2.3 for details of test standards.

Details of test methods and the conditions which apply for Type Approval testing in all countries can be obtained from Tait Electronics Ltd.

1.2.2 General

Power Output:

T838	- Rated Power	..	50W
	- Range Of Adjustment	..	10 to 60W (typical)
T839	- Rated Power	..	100W
	- Range Of Adjustment	..	20 to 120W (typical)

Input Power	..	600mW to 1W

Duty Cycle Rating:

T838	..	50W continuous to +60°C
T839	..	100W continuous to +60°C

Intermodulation (PA with output isolator)	..	-70dBc or -40dBi[1] with 25dB isolation & interfering signal of -30dBc

Mismatch Capability:

Ruggedness	..	refer to your nearest Tait Dealer or Customer Service Organisation
Stability	..	5:1 VSWR (all phase angles)

Supply Voltage:

Operating Voltage	..	10.8 to 16V DC
Standard Test Voltage	..	13.8V DC
Polarity	..	negative earth only
Polarity Protection	..	crowbar diode

1. dBi denotes the level of the intermodulation product relative to the interfering signal.

 Copyright TEL

Supply Current:

Standby		..	50mA
Transmit	- T838	..	11A (9A typical @ 156MHz)
	- T839	..	19A (15A typical @ 156MHz)

Spurious Emissions:

Conducted	- Transmit	..	-36dBm to 1GHz -30dBm to 4GHz
	- Standby	..	-57dBm to 1GHz -47dBm to 4GHz
Radiated	- Transmit	..	-36dBm to 1GHz -30dBm to 4GHz
	- Standby	..	-57dBm to 1GHz -47dBm to 4GHz

Operating Temperature Range .. -30°C to +60°C

Dimensions:

Height		..	183mm
Width	- T838	..	60mm
	- T839	..	120mm
Length		..	340mm

Weight:

T838	..	3.2kg
T839	..	3.4kg

1.2.3 Test Standards

Where applicable, this equipment is tested in accordance with the following standards.

1.2.3.1 European Telecommunication Standard

ETS 300 086 January 1991

Radio equipment and systems; land mobile service; technical characteristics and test conditions for radio equipment with an internal or external RF connector intended primarily for analogue speech.

ETS 300 113 March 1996

Radio equipment and systems; land mobile service; technical characteristics and test conditions for radio equipment intended for the transmission of data (and speech) and having an antenna connector.

ETS 300 219 October 1993

Radio equipment and systems; land mobile service; technical characteristics and test conditions for radio equipment transmitting signals to initiate a specific response in the receiver.

ETS 300 279 February 1996

Radio equipment and systems; electromagnetic compatibility (EMC) standard for private land mobile radio (PMR) and ancillary equipment (speech and/or non-speech).

1.2.3.2 DTI CEPT Recommendation T/R-24-01

Annex I: 1988

Technical characteristics and test conditions for radio equipment in the land mobile service intended primarily for analogue speech.

Annex II: 1988

Technical characteristics of radio equipment in the land mobile service with regard to quality and stability of transmission.

1.2.3.3 Telecommunications Industry Association

ANSI/TIA/EIA-603-1992

Land mobile FM or PM communications equipment measurement and performance standards.

1.2.3.4 Chinese Radio Regulatory Commission

GB/T 15938 - 1995

General specification for equipment of radio paging systems.

 Copyright TEL

1.3 Product Codes

The three groups of digits in the T830 Series II product code provide information about the model, type and options fitted, according to the conventions described below.

The following explanation of T830 Series II product codes is not intended to suggest that any combination of features is necessarily available in any one product. Consult your nearest Tait Dealer or Customer Service Organisation for more information regarding the availability of specific models, types and options.

Model

The Model group indicates the basic function of the product, as follows:

T83X-XX-XXXX	T837 exciter T838 50W power amplifier T839 100W power amplifier

Type

The Type group uses two digits to indicate the basic RF configuration of the product.

The first digit in the Type group designates the frequency range:

T83X-**X**X-XXXX	'2' for 148-174MHz

The second digit in the Type group indicates the channel spacing and is not applicable to power amplifiers:

T83X-X**X**-XXXX	'0' for all power amplifiers

Options

T83X-XX-**XXXX**	The Options group uses four digits and/or letters to indicate any options that may be fitted to the product. This includes standard options and special options for specific customers. '0000' indicates a standard Tait product with no options fitted. The large number of options precludes listing them here.

1.4 Paging Product Range

The following table lists the range of T838 and T839 paging product types available at the time this manual was published. Consult your nearest Tait Dealer or Customer Service Organisation for more information.

Output Power (W)	50	100	
Frequency Range (MHz)	148-174	148-174	
PA Type: T838-	20-0000		
PA Type: T839-		20-0000	20-1020[a]

a. Chinese market only.

You can identify the PA type by checking the product code printed on a label on the rear of the heatsink (Figure 1.1 in Part A shows typical labels). You can further verify the PA type by checking the placement of an SMD resistor in the table that is screen printed onto the PCB (refer to Section 5.1 for more details).

 Copyright TEL

2 T838/839 Circuit Operation

This section provides a basic description of the circuit operation of the T838/839 PA.

Refer to Section 5 where the parts lists, grid reference index and diagrams will provide detailed information on identifying and locating components. Refer also to Figure 3.2 which shows the location of the main adjustment controls.

The following topics are covered in this section.

Section	Title	Page
2.1	**Introduction**	**2.3**
2.2	**RF Circuitry**	**2.4**
2.3	**Control Circuitry**	**2.5**
2.3.1	Power Control	2.6
2.3.2	Driver Power Level	2.6
2.3.3	Thermal Protection	2.6
2.3.4	Forward And Reverse Power Alarms	2.7
2.3.5	Forward And Reverse Power Metering	2.7
2.3.6	Fan Control Circuitry	2.7
2.4	**Power Supply & Regulator Circuits**	**2.8**

Figure	Title	Page
2.1	T838 High Level Block Diagram	2.3
2.2	T839 High Level Block Diagram	2.3
2.3	T838/839 Control Circuitry Block Diagram	2.5
2.4	T839 Fan Control Logic Diagram	2.7
2.5	T838/839 Power Supply & Regulator Circuitry Block Diagram	2.8

Copyright TEL

2.1 Introduction

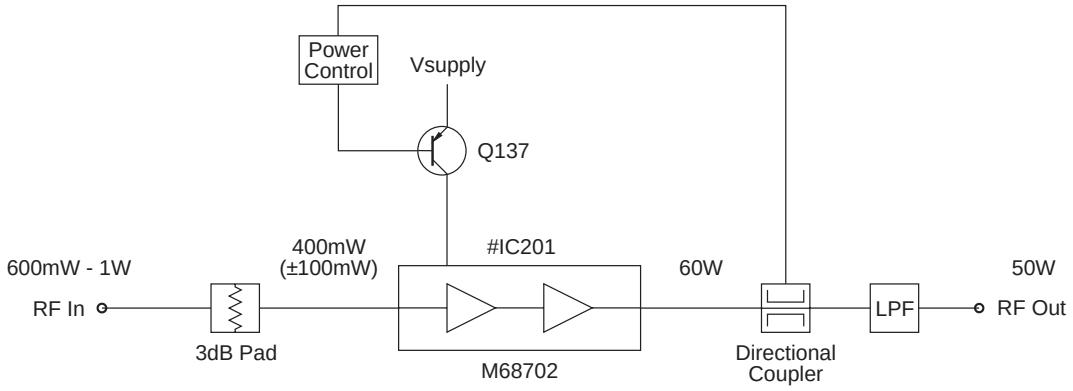

Figure 2.1 T838 High Level Block Diagram

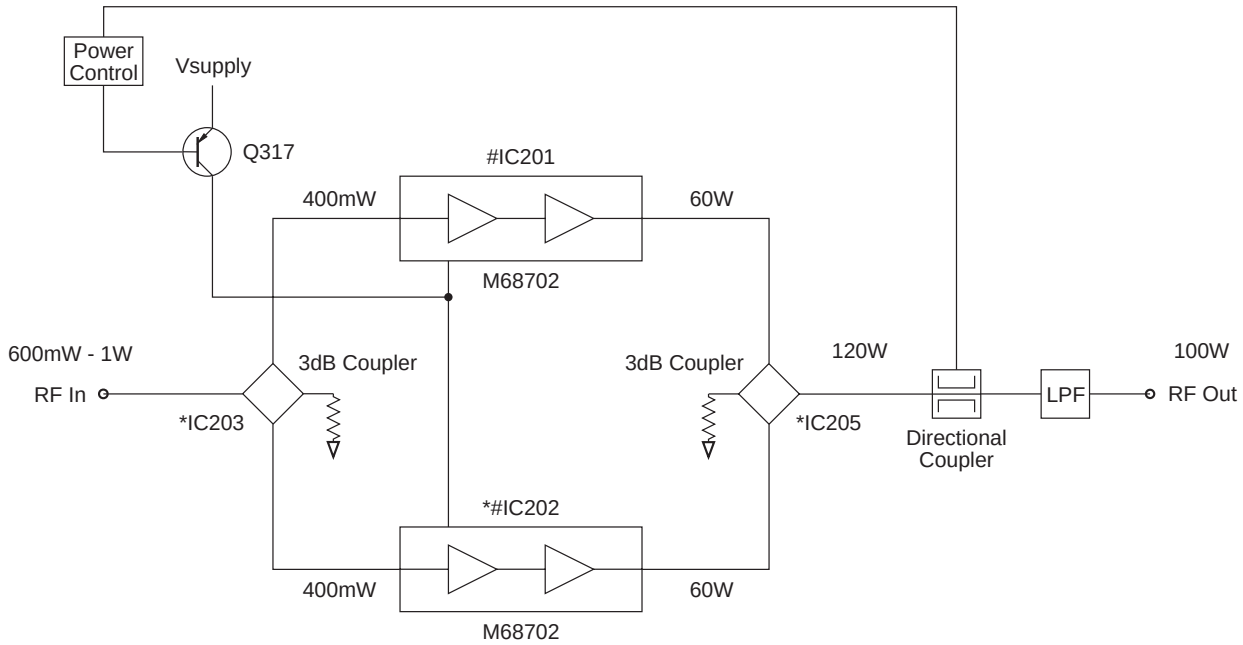

Figure 2.2 T839 High Level Block Diagram

The T838/839 comprise a single stage RF power amplifier with extensive control circuitry:

- in the T838 this stage consists of a single, two-stage RF power module which increases the drive level to approx. 60W;
- in the T839 this stage consists of two, two-stage RF power modules, each of which increases the drive level to approx. 60W; the outputs from these modules are then combined to provide the rated output power.

Figure 2.1 and Figure 2.2 show the configuration of each of the main circuit blocks on a functional level, while the fold-out Figure 1.1 shows their location on the PCB.

2.2 RF Circuitry

(Refer to the RF & thermistor control sections circuit diagram in Section 5.)

The T838 consists of a single RF power module (#IC201) which delivers 60-70W. The input signal is fed directly into the module, and the output from the module is passed to the antenna socket via the directional coupler and low pass filter.

The T839 consists of two RF power modules (#IC201 & *#IC202), each of which delivers 60-70W. The input signal to these modules is split via a 3dB quadrature hybrid (*IC203). The outputs from the modules are recombined by a second 3dB quadrature hybrid (*IC205) before being passed to the antenna socket via the directional coupler and low pass filter.

The directional coupler senses forward and reflected power, which is rectified (D201 & D203) and passed to the control circuitry for metering, alarm and power control purposes.

Power control is via a series pass transistor (Q137), which controls the supply voltage on pin 2 of #IC201 in the T838, and pin 2 of both #IC201 and *#IC202 in the T839.

 Copyright TEL

2.3 Control Circuitry

(Refer to the control section circuit diagram in Section 5.)

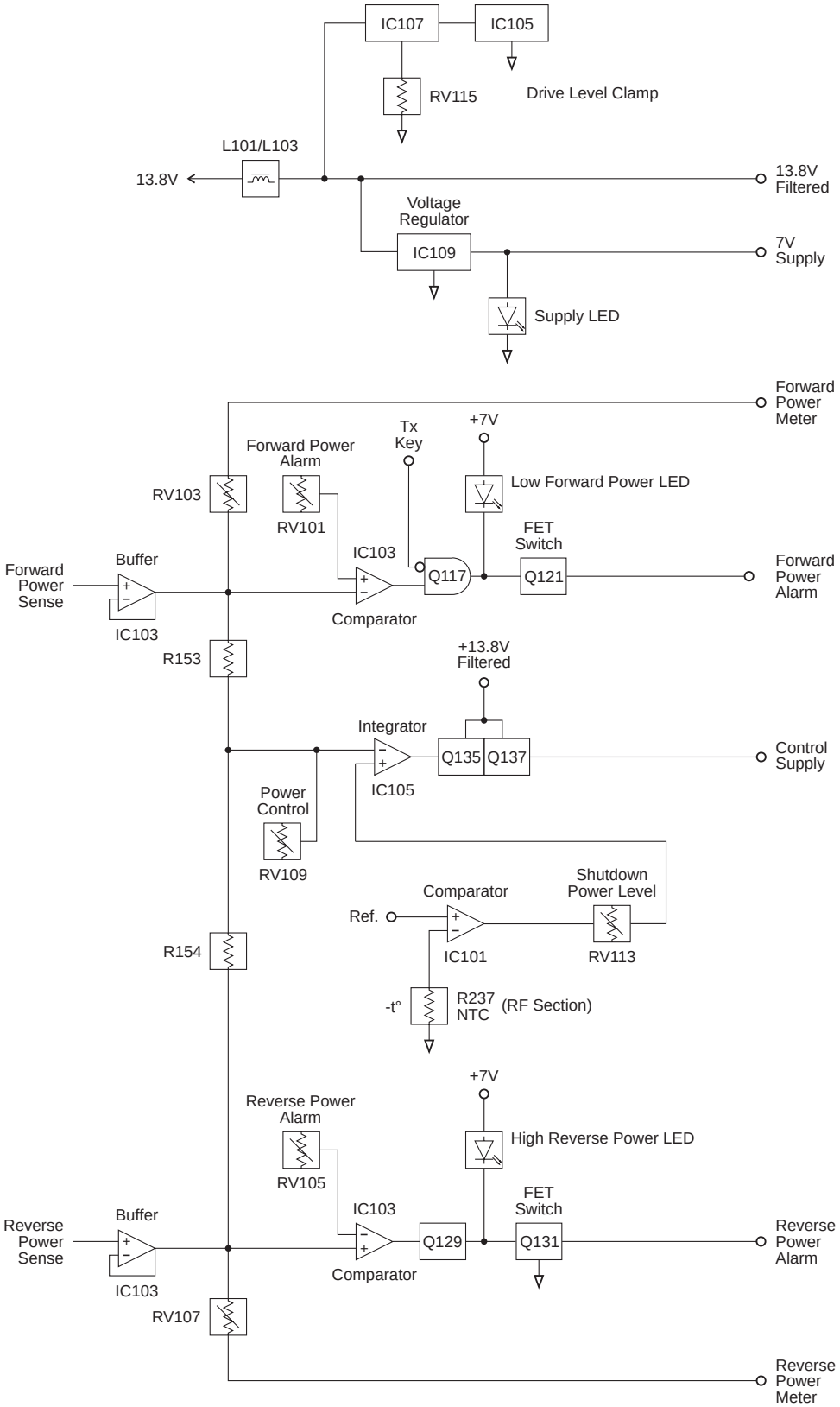

Figure 2.3 T838/839 Control Circuitry Block Diagram

2.3.1 Power Control

The DC voltages from the directional coupler representing forward and reflected power are buffered by the two voltage followers, IC103 pins 1, 2 & 3 and pins 8, 9 & 10. Their outputs are summed at an integrator (IC105 pins 1, 2 & 3), which drives the series pass control elements (Q135 & Q137).

Forward and reflected power are summed so that, under high output VSWR, the power control turns the PA down. This is because the control loop adjusts for the same DC voltage from the directional coupler that would have been present if there were no reflected power.

2.3.2 Driver Power Level

The maximum output power of the T838/839 can be limited by placing a ceiling on the driver output power level using RV115 (accessible through the side cover). For example, if RV115 is set for a maximum output power of 50W, the range of adjustment using RV109 (front panel power adjust) will be 20 to 50W.

Caution: **The driver power level clamp (RV115) is factory set to give a maximum power output of 60W for the T838 and 120W for the T839. The unit may be damaged if this level is increased.**

2.3.3 Thermal Protection

At excessively high temperatures, the output power will automatically reduce to a preset level (set by RV113), thus preventing the PA from overheating.

Ambient temperature within the PA is measured by a thermistor controlled voltage divider (R168, R237) which applies a voltage to a comparator with hysteresis (IC101 pins 8, 9 & 10). This thermistor is located on the PCB in the low pass filter cavity.

Thermal protection is also provided for each RF power module to prevent the module itself from overheating. This protection consists of a thermistor controlled voltage divider (R207, *R215 and R220, R219) which sets a voltage on a comparator with hysteresis (IC204 pins 1, 2 & 3 and 5, 6 & 7). These thermistors are located on the module flanges.

The output current from all comparators is summed into the power control network via RV113 so that the power level to which the PA must turn down may be set.

 Copyright TEL

2.3.4 Forward And Reverse Power Alarms

If forward power drops below, or reverse power rises above, presettable limits, alarms may be triggered.

The alarm outputs are open drain configuration and are low under normal conditions (i.e. forward and reverse power levels are normal).

IC103 pins 12, 13 & 14 and pins 5, 6 & 7 form comparators with thresholds adjusted via RV101 and RV105 respectively. The inputs are from the forward and reverse power signals from the directional coupler, buffered by IC103 pins 1, 2 & 3 and pins 8, 9 & 10. Thus, the power levels at which the forward and reverse power alarms are triggered are defined by RV101 and RV105 respectively.

2.3.5 Forward And Reverse Power Metering

Forward and reverse power signals from the two IC1 buffers are available for metering purposes. The output currents are adjustable via RV103 (forward power) and RV107 (reverse power).

2.3.6 Fan Control Circuitry

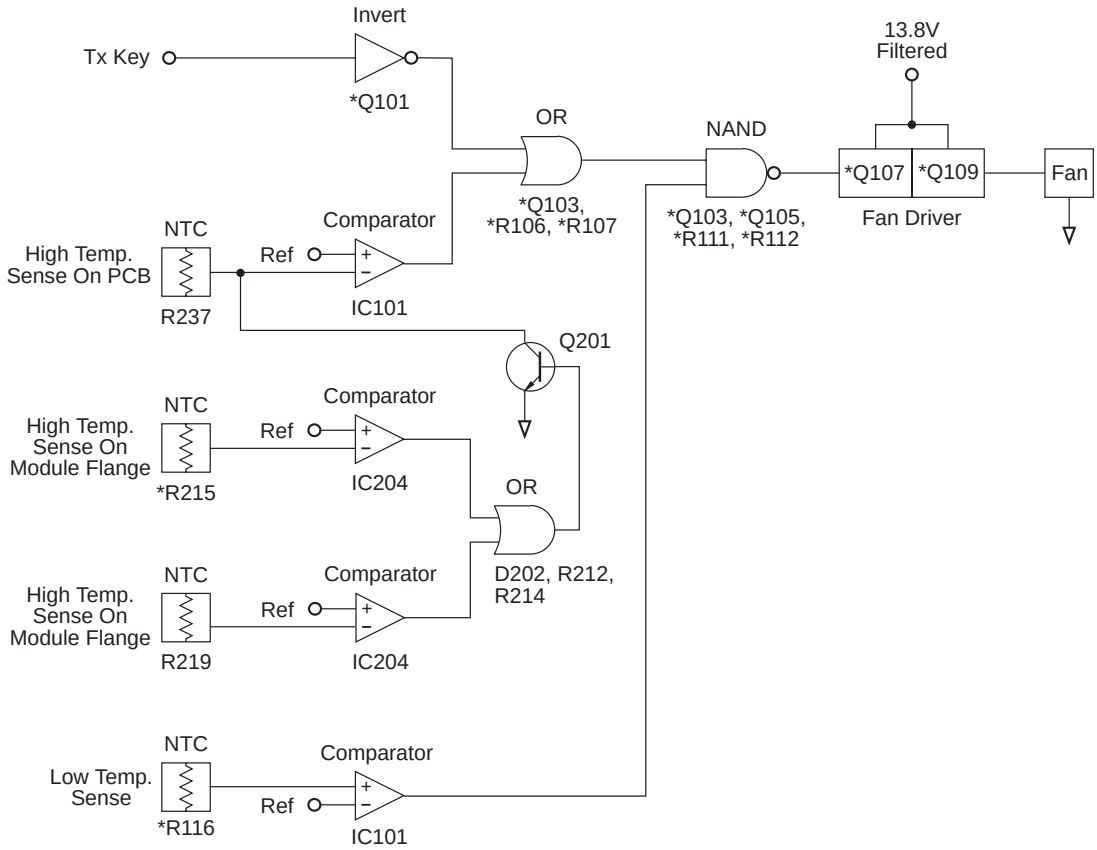

Figure 2.4 T839 Fan Control Logic Diagram

Comparator IC101 pins 12, 13 & 14 are set to switch at heatsink temperatures greater than +90°C or RF power module flange temperatures greater than +110°C, and pins 1, 2 & 3 at temperatures less than -10°C.

A logic AND function is applied to the comparator outputs by *Q103 and *Q105, thereby turning on the fan unconditionally (via *Q107 and *Q109) if the heatsink temperature exceeds +90°C or the module flange temperatures exceed +110°C.

A logic OR function is applied to comparator IC101 pins 12, 13 & 14 and Tx KEY signals, thereby turning on the fan when the transmitter is keyed and the temperature is between -10°C and +90°C (or +110°C for the module flanges).

If the temperature drops below -10°C, *Q105 is turned off, preventing *Q103 from activating the fan.

2.4 Power Supply & Regulator Circuits

(Refer to the control section circuit diagram in Section 5.)

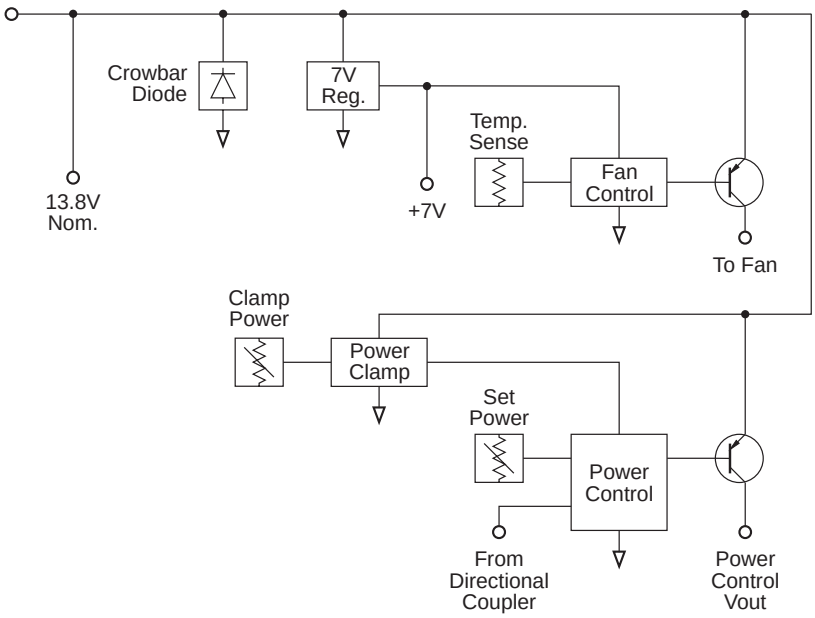

Figure 2.5 T838/839 Power Supply & Regulator Circuitry Block Diagram

The T838/839 are designed to operate off a 10.8-16V DC supply (13.8V nominal). A 7V supply runs directly off the 13.8V rail, driving the fan control, power control and alarm circuitry.

A crowbar diode is fitted for protection against connection to a power supply of incorrect polarity. It also provides transient overvoltage protection.

Note: A fuse must be fitted in the power supply line for the diode to provide effective protection.

 Copyright TEL

3 T838/839 Initial Adjustment

Caution: **This equipment contains CMOS devices which are susceptible to damage from static charges. Refer to Section 1.2 in Part A for more information on anti-static procedures when handling these devices.**

The following section describes the full adjustment procedure to be carried out before operating the T838/839.

Note: The T838/839 require no RF tuning or alignment.

Refer to Section 5 where the parts lists, grid reference index and diagrams will provide detailed information on identifying and locating components. Refer also to Figure 3.2 which shows the location of the main adjustment controls.

The following topics are covered in this section.

Section	Title	Page
3.1	**Test Equipment Required**	**3.3**
3.2	**Preliminary Checks**	**3.3**
3.3	**Setting The Output Power**	**3.4**
3.4	**High Temperature Shutdown Power Level**	**3.5**
3.5	**Remote Forward Power Meter Calibration**	**3.5**
3.6	**Remote Reverse Power Meter Calibration**	**3.5**
3.7	**Setting Alarm Levels**	**3.6**
3.7.1	Forward Power	3.6
3.7.2	Reverse Power	3.6

Figure	Title	Page
3.1	T838/839 Test Equipment Set-up	3.3
3.2	T838/839 Main Adjustment Controls	3.7

Copyright TEL

3.1 Test Equipment Required

- DC power supply capable of delivering 30A at 13.8V.
- Multimeter or DMM (e.g. Fluke 77).
- RF power meter (e.g. HP 435 series or Bird Wattmeter).
- 150W 30dB attenuator.
- 150W 3dB 50 ohm pad.
- 'BNC' to 'N' type adaptors (e.g. Amphenol, Greenpar).
- Appropriate trimming tools.

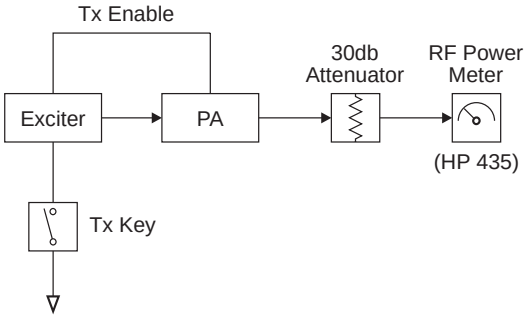

Figure 3.1 T838/839 Test Equipment Set-up

Caution: **Do not connect attenuators or DC blocks between the T837 and T838/839 or the cyclic keying circuitry will not function correctly.**

3.2 Preliminary Checks

Check for short circuits between the positive rail and earth.

Set up the test equipment as in Figure 3.1.

Connect the T838/839 to a 13.8V DC supply.

Check that the quiescent current is <50mA.

To key the transmitter, earth the key line (D-range 1 [PL100] pin 13) on the exciter.

Check that the power supply is still at 13.8V under load.

Check that the regulated power control supply is approximately 7V.

Note: The output power and alarm levels should be set with the side cover on. If the cover is removed for other adjustment procedures, make a final check of the output power and alarm levels with the side cover on.

3.3 Setting The Output Power

Caution: **If the high temperature shutdown power level has not yet been set or is unknown, check that the unit does not overheat while setting the output power.**

Note 1: You must set up the T838/839 according to the following instructions ***before*** operation in a radio system. ***Do not*** use the factory default settings as they may not suit your operating frequency.

To obtain optimum performance from the T838/839, ensure that the exciter used in this set-up procedure is the one that will be used with the PA in the radio system.

Note 2: Cables and connectors can easily cause a power loss of several watts if either too long or poorly terminated. Always use the shortest possible leads (or connectors instead of leads) between the T838/839 and power meter set-up.

You will need appropriate extension leads if you wish to carry out the adjustment procedures with the T838/839 withdrawn from the rack in the latched position. Alternatively, disconnect and withdraw the T838/839 and reconnect it behind the rack.

Note 3: The actual power used may be limited by regulatory requirements.

Set the exciter to the required operating frequency.

Connect the exciter output to the PA input via a thru-line wattmeter with a 1W full scale reading. Special BNC/N leads will be required.

Connect an RF power meter to the PA output connector.

With the exciter ***not*** keyed:

- remove the label over the adjustment hole for RV115 (driver power clamp);
- set RV115 to maximum (fully clockwise);
- set RV109 (front panel power control) to maximum (fully clockwise).

Key on the exciter.

Quickly (within 30 seconds) adjust RV115 until the output power is:

T838 - 60W
T839 - 120W.

Adjust RV109 to set the power output to the following levels (or less if required):

T838 - 50W
T839 - 100W.

 Copyright TEL

Caution: ***Do not*** **allow the output power to exceed these levels as this will seriously reduce the reliability of the PA.**

Do not **use RV115 to set the output power as this will disable the thermal protection circuitry. The power clamp must always be 10W (T838)/ 20W (T839) above the set output power.**

Replace the label over the adjustment hole for RV115.

3.4 High Temperature Shutdown Power Level

Set RV109 (power control) to the required output power.

Earth pin 9 of IC101 (the via at NTC R237 is convenient).

Adjust RV113 (shutdown power level) for an output power of:

T838 - 16W
T839 - 40W.

Remove the earth from pin 9 of IC101 (or the pad of R237).

To check the operation of the RF power module thermistor(s), place shorting links across pins 1 & 2 and 2 & 3 of LINK201.

Check that the output power drops to:

T838 - 16W
T839 - 40W.

Remove the shorting links from LINK201.

3.5 Remote Forward Power Meter Calibration

If a remote meter is connected, adjust RV103 (forward power meter calibration) for the remote reading to agree with the RF power meter reading.

3.6 Remote Reverse Power Meter Calibration

If a remote meter is connected, connect a 50 ohm 3dB pad (with the output open circuit) to the PA output.

Apply RF drive and Tx key.

Adjust RV107 (reverse power meter calibration) for a quarter of the forward power reading.

3.7 Setting Alarm Levels

Note: If forward and reverse power metering is being used, set up their calibration (Section 3.5 and Section 3.6) before setting the alarm levels.

3.7.1 Forward Power

Power up the T838/839 and adjust RV109 (front panel power control) so that the output power is at the alarm level required (e.g. 80W if the T839 normally operates at 100W).

Adjust RV101 (forward power alarm set) so that the forward power alarm LED lights.

Check the alarm level setting by adjusting the power up and down and observing the alarm LED. A few watts hysteresis can be expected.

Readjust RV109 for the normal operating level.

Note: Remote indication is available at pin 3 of D-range 1.

3.7.2 Reverse Power

Power up the T838/839 and adjust RV109 (front panel power control) for the normal operating power level.

Place a known mismatch of the required value (e.g. 3:1 VSWR) and adjust RV105 (reverse power alarm set) so that the reverse power alarm LED lights.

Example: A VSWR of 3:1 can be simulated by connecting an unterminated 3dB pad (100W) to the PA output. This will result in a return loss of 6dB.

Note: Remote indication is available at pin 4 of D-range 1.

 Copyright TEL

4 T838/839 Fault Finding

Caution: **This equipment contains CMOS devices which are susceptible to damage from static charges. Refer to Section 1.2 in Part A for more information on anti-static procedures when handling these devices.**

The following test procedures and fault finding flow charts may be used to help locate a hardware problem, however they are by no means a complete fault finding procedure. If you still cannot trace the fault after progressing through them in a logical manner, contact your nearest Tait Dealer or Customer Service Organisation. If necessary, you can get additional technical help from Customer Support, Radio Systems Division, Tait Electronics Ltd, Christchurch, New Zealand (full contact details are on page 2).

Refer to Section 5 where the parts lists, grid reference index and diagrams will provide detailed information on identifying and locating components.

The following topics are covered in this section.

Section	Title	Page
4.1	**Visual Checks**	**4.3**
4.2	**DC Checks**	**4.3**
4.3	**RF Checks**	**4.3**
4.4	**Fault Finding Charts**	**4.7**
4.4.1	T838 PA	4.7
4.4.2	T839 PA	4.8
4.4.3	Power Control	4.9
4.4.4	Fan Control Circuitry	4.10
4.5	**Replacing RF Power Modules**	**4.11**
4.6	**Removing The PCB From The Heatsink**	**4.12**

Figure	Title	Page
4.1	Positioning Of Test Leads	4.6

Copyright TEL

4.1 Visual Checks

Remove the side cover from the T838/839 and inspect the PCB for damaged or broken components, paying particular attention to the surface mounted devices (SMDs). Also check for defective solder joints.

Refer to Section 4.5, Section 4.6 and Section 3 of Part A for more details on repair and replacement of components.

4.2 DC Checks

Check that +13.8V is present on pin 3 of *#IC202 and/or #IC201. Make this measurement when the transmitter is not keyed.

Check that approximately 6-13V is present on pin 2 of *#IC202 and/or #IC201 (the level is dependent on the setting of RV109).

Check that +13.8V is present at pin 4 of IC103.

Check that approximately +12V is present at pin 8 of IC105 (the level is dependent on the setting of RV109).

Check that +7.0V is present at the output of regulator IC109.

4.3 RF Checks

The PA Fault Finding Charts (Section 4.4.1 & Section 4.4.2) provide a systematic approach for locating a fault in the RF circuitry. Use these charts in conjunction with Figure 4.1, which shows the locations of the 50Ω input and output test points for RF power modules #IC201 and *#IC202.

Note 1: Use good quality 50Ω coax for the "flying" test leads.

Note 2: Ensure each output is terminated in a 50Ω load of the correct power rating.

For problems with the power control circuitry, refer to the Power Control Fault Finding Chart (Section 4.4.3).

Copyright TEL

replace A4 pages D4.5/D4.6 with A3 pages D4.5/D4.6

replace A4 pages D4.5/D4.6 with A3 pages D4.5/D4.6

Copyright TEL

4.4 Fault Finding Charts

4.4.1 T838 PA

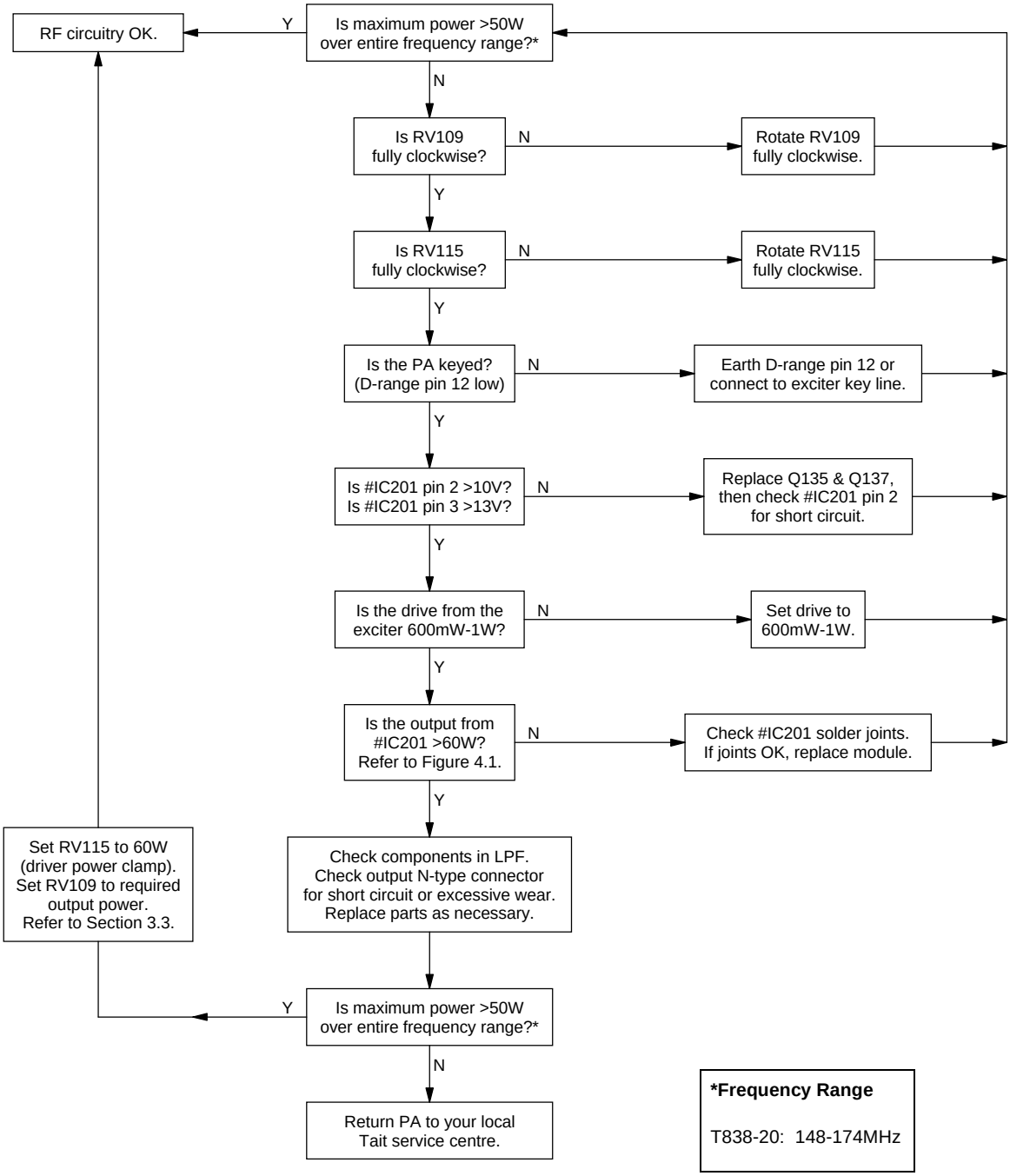

4.4.2 T839 PA

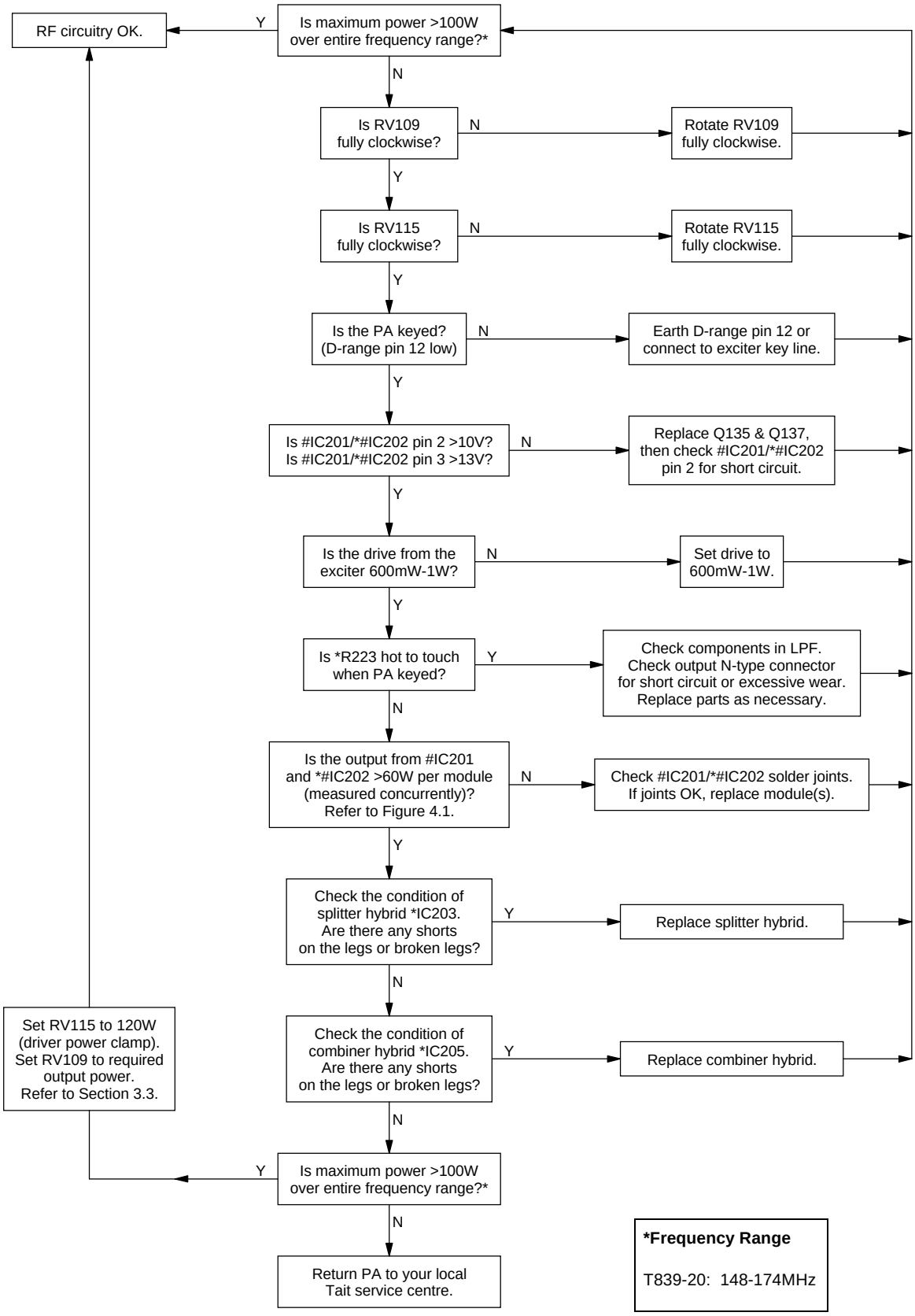

 Copyright TEL

4.4.3 Power Control

Approximate voltages (@ 174MHz) under normal operating conditions:

Forward & Reverse Power Measurement	Output Power	
	50W	100W
forward power at IC103 pin 1	2.3V	3.3V
forward power at C261	4.1V	6.0V
reverse power at IC103 pin 8	0.6V	0.6V
reverse power at C294	0.3V	0.6V

Caution

The following voltage checks are all done with RV115 (driver power clamp) set to maximum. When these tests are finished, reset RV115 to 60W (T838) or 120W (T389).

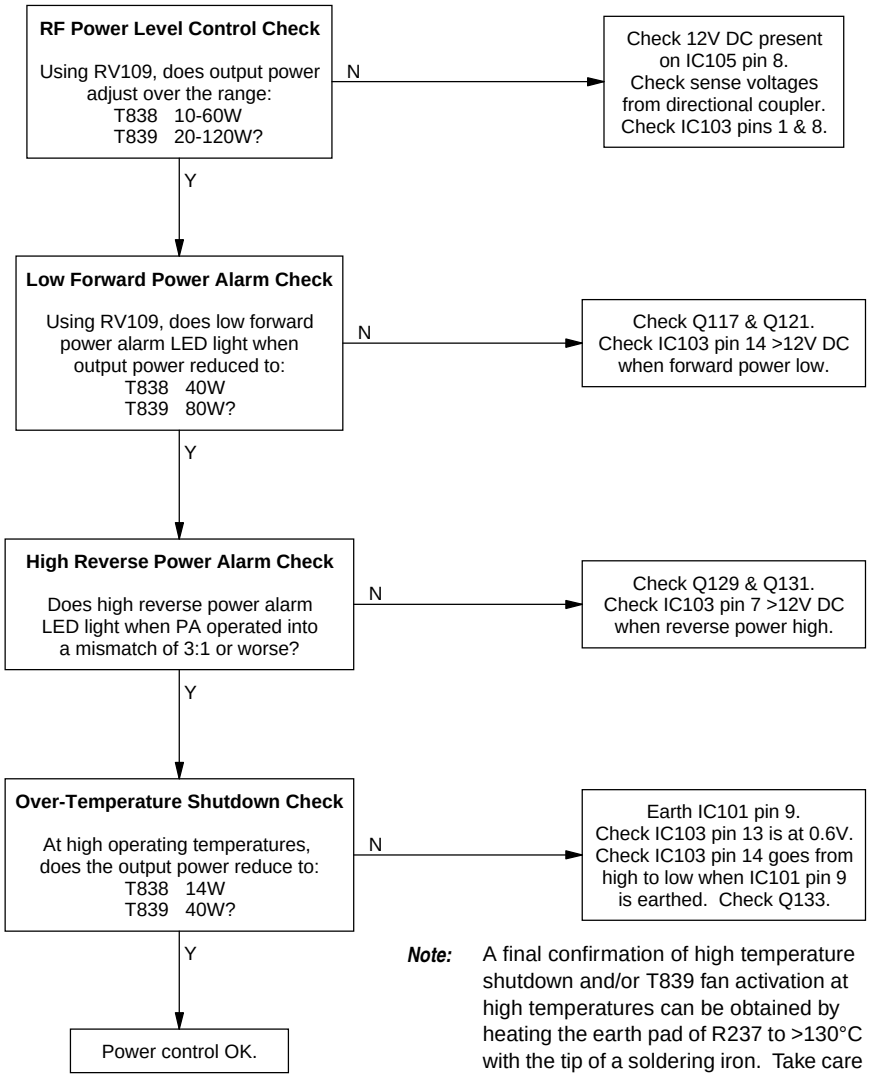

Note: A final confirmation of high temperature shutdown and/or T839 fan activation at high temperatures can be obtained by heating the earth pad of R237 to >130°C with the tip of a soldering iron. Take care not to damage R237.

4.4.4 T839 Fan Control Circuitry

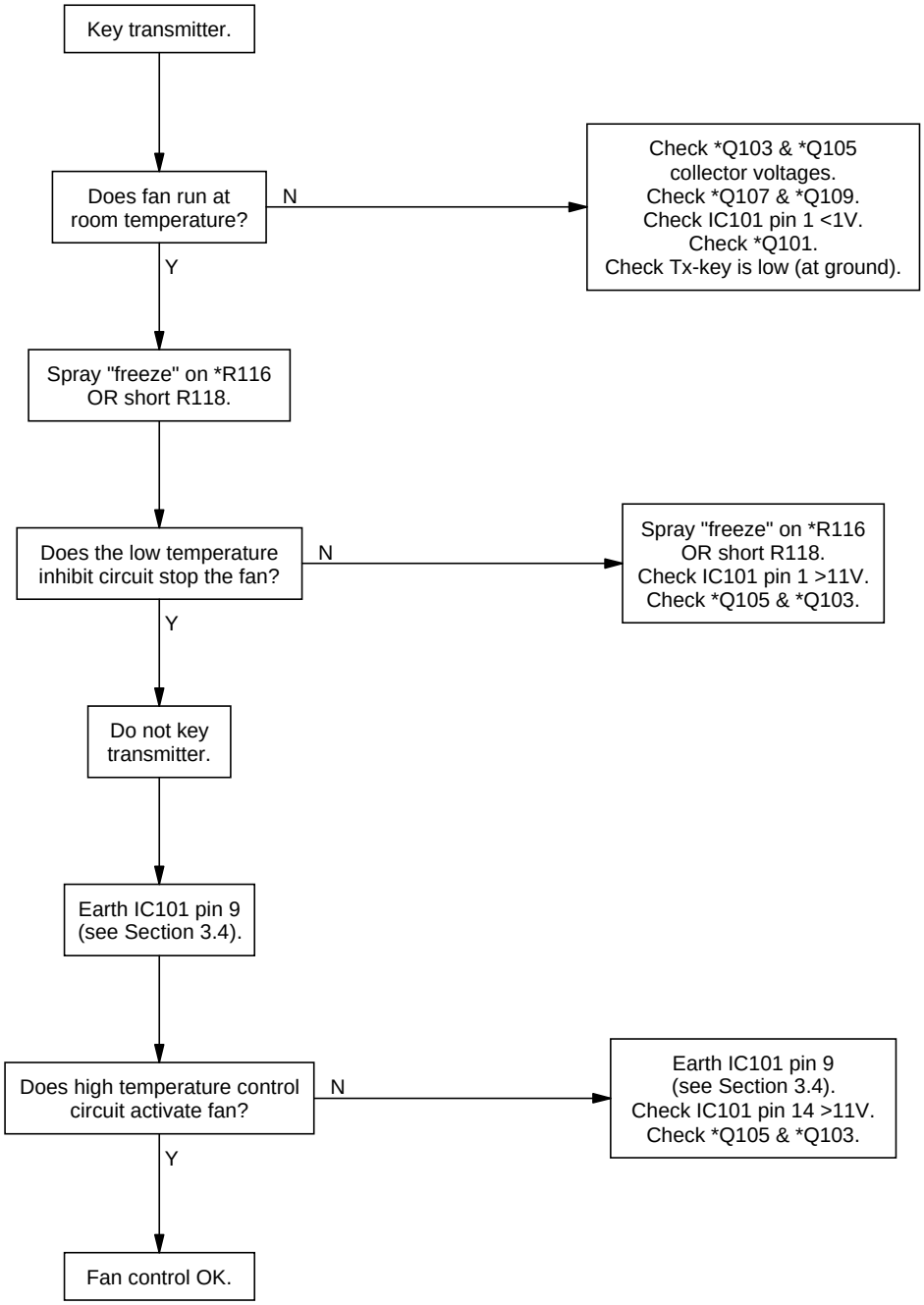

 Copyright TEL

4.5 Replacing RF Power Modules

Caution: **Follow these instructions carefully, otherwise the module can fail because of poor heatsinking or cracked substrates.**

Caution: **Do not apply too much heat to the original type of thermistor assembly as the epoxy used may give off fumes that will cause eye irritation. If necessary, replace this device as a complete assembly (see note 1 below).**

Desolder the module and thermistor[1] legs by heating with a soldering iron and lifting away from the PCB with a screwdriver or thin stainless steel spike.

Undo the module screws and remove the thermistor assembly.

Desolder and remove both earth tags.

Gently lift the module away from the heatsink.

Note: The module may be stuck down quite firmly with heatsink compound. You may need to carefully prise it away from the heatsink with a small screwdriver. Keep the heatsink compound clean while the module is detached.

Apply a small amount of heatsink compound (Dow-Corning 340 or equivalent) to the replacement module mounting surface. Use enough compound to ensure an even film over the entire mounting surface.

Reposition the module in the correct orientation and ensure it is well pasted to the heatsink.

Replace the earth tags and thermistor[1] assembly in their original positions and hand-tighten the screws, ensuring the tags and thermistor remain in place. Alternately tighten each screw evenly, finally torquing them down to 56N.cm/5in.lbf. with an accurate torque driver.

Caution: **It is essential that you apply the correct torque to these screws to allow the module flange to expand and contract under temperature cycling. Also, do not solder any module legs before torquing down otherwise the device may be broken.**

Solder all module legs to the PCB.

Carefully solder the thermistor leg to the PCB[1].

1. Later production PAs are fitted with a different type of thermistor which you do not need to desolder from the PCB before removing a power module. Refer to the top side PCB layout diagrams in Sections 5.2 and 5.3 for further details.

4.6 Removing The PCB From The Heatsink

Note: This is a lengthy procedure and should be considered only after all other checks have been carried out. There are no components on the bottom of the PCB.

Remove the harmonic filter shield lid.

T839 Only: Desolder the power feed to the fan from the PCB.

Remove the output 50 ohm coaxial connector by unscrewing it from the heatsink casting and desoldering it from the PCB and harmonic filter shield wall.

Unplug the input 50 ohm coaxial cable from the PCB, unscrew the BNC connector from the heatsink, and remove the connector and cable.

Desolder the positive and negative power feed wires from the D-range PCB.

Disconnect the ribbon cable from the D-range PCB.

Remove the 2 screws securing the D-range connector and PCB to the heatsink and withdraw the assembly from the heatsink.

Remove the mounting screws for the TO-220 device(s): Q137 (and *R223 in the T839).

Remove the screws securing the RF power module(s): #IC201 (and *#IC202 in the T839).

T839 Only: Remove the four hex nuts and washers from the splitter/combiner hybrids (*IC203 and *IC205).

Remove the 11 PCB retaining screws.

Push the three LEDs out of their front panel grommets.

Lift the PCB gently from the heatsink to gain access to the underside of the board.

Note: #IC201, *#IC202 and *R223 may be stuck down with heatsink compound. You may need to carefully prise them away from the heatsink with a small screwdriver.

Caution: **Keep the heatsink compound clean while the PCB is detached. Any objects caught in the heatsink compound underneath the module which prevent effective earthing and/or heatsinking will cause catastrophic failure.**

Caution: **Do not operate the PA with the PCB detached as the heatsink is used for earthing and heat dissipation.**

 Copyright TEL

To replace the PCB, reverse the order of removal, taking care that the wiring is correctly positioned and not 'pinched'.

Make sure that the heatsink compound has stayed clean, and that the insulating pad for Q137 is not damaged.

If you have difficulty refitting the LEDs, try pushing the body of the LED back into the grommet with a thin screwdriver or spike.

Caution: **Tighten the splitter/combiner hybrid hex nuts to a torque of 22N.cm/ 2in.lbf. Any greater force will damage the devices.**

Tighten the RF power module screws to a torque of 56N.cm/5in.lbf. with an accurate torque driver. Deviating from this figure can cause the device to fail (refer to Section 4.5).

Copyright TEL

5 T838/839 PCB Information

Caution: **This equipment contains CMOS devices which are susceptible to damage from static charges. Refer to Section 1.2 in Part A for more information on anti-static procedures when handling these devices.**

This section provides the following information on the T838 and T839 power amplifiers:

- parts lists
- grid reference indexes
- mechanical assembly drawings
- PCB layouts
- circuit diagrams.

Section	Title	IPN	Page
5.1	**Introduction**		**5.1.3**
5.2	**T838 Power Amplifier PCB**	**220-01404-03**	**5.2.1**
5.3	**T839 Power Amplifier PCB**	**220-01404-03**	**5.3.1**

The T838 and T839 share the same basic design and are built on the same PCB. However, in order to simplify the presentation of the PCB information for each product, we have provided a separate parts list, grid reference index and set of drawings for both the T838 and T839, even though this has meant duplicating some information (e.g. grid reference index and circuit diagrams) in each section.

Copyright TEL

5.1 Introduction

Product Type Identification

You can identify the PA type by checking the product code printed on a label on the rear of the heat-sink (product codes are explained in Section 1.3 in this Part of the manual, and Figure 1.1 in Part A shows typical labels). You can further verify the PA type by checking the placement of an SMD resistor in the table that is screen printed onto the PCB, similar to the example drawn below. In this example, the resistor indicates that the product was built as a T830 Series II compatible T839-20-XXXX.

PRODUCT TYPE			
MODEL	REV	SERIES I	SERIES II
T839-10	3A		
T839-20	3A		▮
T838-10	3A		
T838-20	3A		

Note:

The only function of this resistor is to indicate the product type. It has no effect on the circuitry or operation of the PA.

PCB Identification

All PCBs are identified by a unique 10 digit "internal part number" (IPN), e.g. 220-12345-00, which is screen printed onto the PCB (usually on the top side), as shown in the example below:

The last 2 digits of this number define the issue status, which starts at 00 and increments through 01, 02, 03, etc. as the PCB is updated. Some issue PCBs never reach full production status and are therefore not included in this manual. A letter following the 10 digit IPN has no relevance in identifying the PCB for service purposes.

Note: It is important that you identify which issue PCB you are working on so that you can refer to the appropriate set of PCB information.

Parts Lists

The 10 digit numbers (000-00000-00) in this Parts List are "internal part numbers" (IPNs). We can process your spare parts orders more efficiently and accurately if you quote the IPN and provide a brief description of the part.

The components listed in this parts list are divided into two main types: those with a circuit reference (e.g. C2, D1, R121, etc.) and those without (miscellaneous and mechanical).

Those with a circuit reference are grouped in alphabetical order and then in numerical order within each group. Each component entry comprises three or four columns, as shown below:

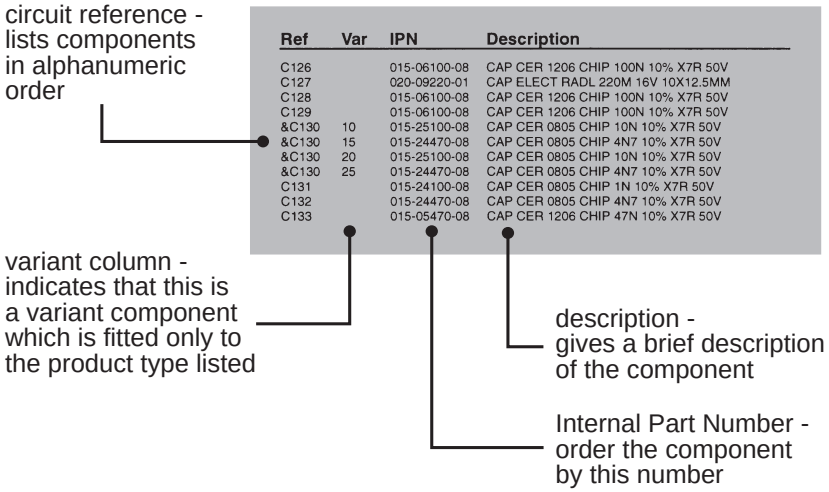

Ref	Var	IPN	Description
C126		015-06100-08	CAP CER 1206 CHIP 100N 10% X7R 50V
C127		020-09220-01	CAP ELECT RADL 220M 16V 10X12.5MM
C128		015-06100-08	CAP CER 1206 CHIP 100N 10% X7R 50V
C129		015-06100-08	CAP CER 1206 CHIP 100N 10% X7R 50V
&C130	10	015-25100-08	CAP CER 0805 CHIP 10N 10% X7R 50V
&C130	15	015-24470-08	CAP CER 0805 CHIP 4N7 10% X7R 50V
&C130	20	015-25100-08	CAP CER 0805 CHIP 10N 10% X7R 50V
&C130	25	015-24470-08	CAP CER 0805 CHIP 4N7 10% X7R 50V
C131		015-24100-08	CAP CER 0805 CHIP 1N 10% X7R 50V
C132		015-24470-08	CAP CER 0805 CHIP 4N7 10% X7R 50V
C133		015-05470-08	CAP CER 1206 CHIP 47N 10% X7R 50V

The mechanical and miscellaneous section lists the variant and common parts in IPN order.

Parts List Amendments

At the front of the parts list is the Parts List Amendments box (an example of which is shown below). This box contains a list of component changes which took place after the parts list and diagrams in this section were compiled. These changes (e.g. value changes, added/deleted components, etc.) are listed by circuit reference in alphanumeric order and supersede the information given in the parts list or diagrams. Components without circuit references are listed in IPN order. The number in brackets at the end of each entry refers to the Tait internal Change Order document.

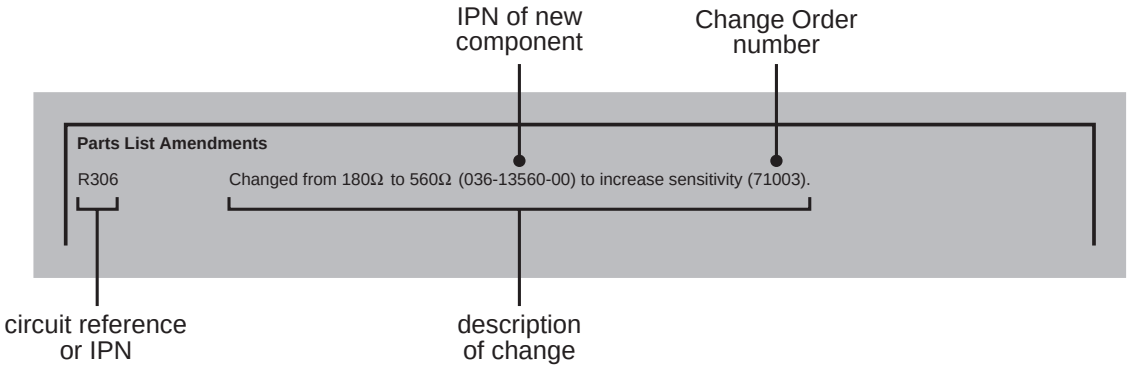

 Copyright TEL

Variant Components

A variant component is one that has the same circuit reference but different value or specification in different product types. Where two products share the same PCB, the term “variant” is also used to describe components unplaced in one product. Variant components have a character prefix, such as “&”, “=” or “#”, before the circuit reference (e.g. &R100).

The table below explains the variant prefixes used in T800 Series II products:

If the variant prefix is. . .	the component will. . .
&	change according to channel spacing
=	change according to frequency stability
#	change according to frequency range
%	change or be placed/unplaced for special applications
*	be unplaced in one product (where two products share the same PCB)

Grid Reference Index

This section contains a component grid reference index to help you find components and labelled pads on the PCB layouts and circuit diagrams. This index lists the components and pads in alphanumeric order, along with the appropriate alphanumeric grid references, as shown below:

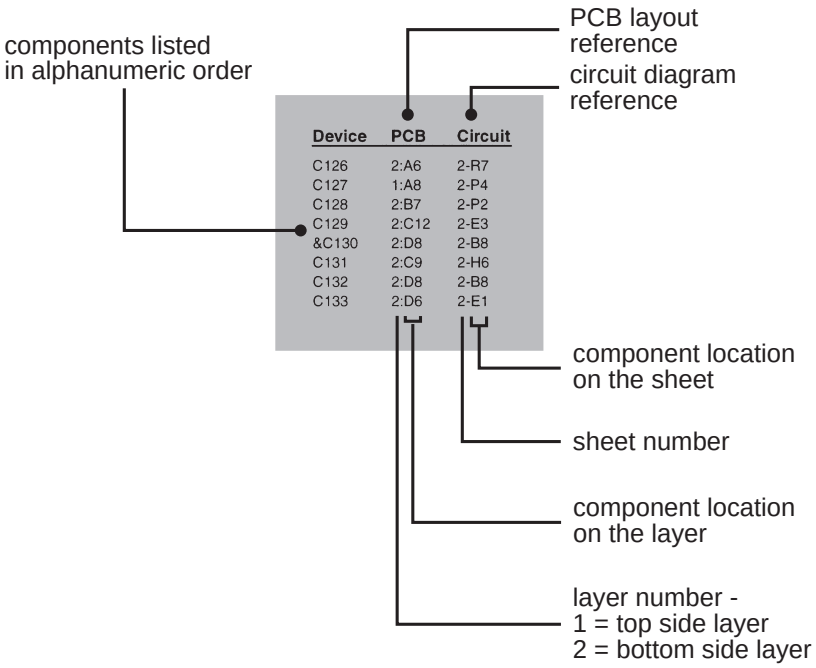

Using CAD Circuit Diagrams

Reading a CAD circuit diagram is similar to reading a road map, in that both have an alphanumeric border. The circuit diagrams in this manual use letters to represent the horizontal axis, and numbers for the vertical axis. These circuit diagram "grid references" are useful in following a circuit that is spread over two or more sheets.

When a line representing part of the circuitry is discontinued, a reference will be given at the end of the line to indicate where the rest of the circuitry is located, as shown below. The first digit refers to the sheet number and the last two characters refer to the location on that sheet of the continuation of the circuit (e.g. 1R3).

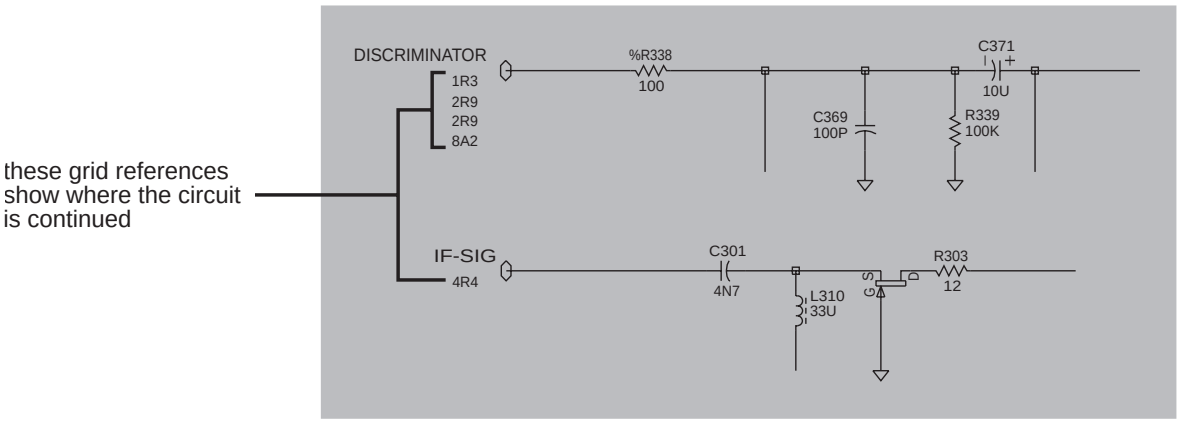

 Copyright TEL

5.2 T838 Power Amplifier PCB

This section contains the following information.

IPN	Section	Page
220-01404-03	Parts List	5.2.3
	Mechanical & Miscellaneous Parts	5.2.8
	Mechanical Assembly	5.2.9
	Grid Reference Index	5.2.11
	PCB Layout - Bottom Side	5.2.13
	PCB Layout - Top Side	5.2.14
	Control Section Circuit Diagram	5.2.15
	RF & Thermistor Control Sections Circuit Diagram	5.2.16

Copyright TEL

T838 Parts List (IPN 220-01404-03)

How To Use This Parts List

The components listed in this parts list are divided into two main types: those with a circuit reference (e.g. C2, D1, R121, etc.) and those without (miscellaneous and mechanical).

Those with a circuit reference are grouped in alphabetical order and then in numerical order within each group. Each component entry comprises three or four columns: the circuit reference, variant (if applicable), IPN and description. A number in the variant column indicates that this is a variant component which is fitted only to the product type listed. Static sensitive devices are indicated by an (S) at the start of the description column.

The miscellaneous and mechanical section lists the variant and common parts in IPN order. Where possible, a number in the legend column indicates their position in the mechanical assembly drawing.

The Parts List Amendments box below lists component changes that took place after the parts list and diagrams in this section were compiled. These changes (e.g. value changes, added/deleted components, etc.) are listed by circuit reference in alphanumeric order and supersede the information given in the parts list or diagrams. Components without circuit references are listed in IPN order.

Parts List Amendments

D101, D105	Removed from the main PCB and replaced by two 1N4148 diodes (IPN 001-50012-00) placed on the D-range PCB: one soldered between PL101 pins 5 and 7 (cathode), the other between PL101 pins 6 and 8 (cathode). To allow external power meters to read zero and still provide meter overvoltage protection (710978).	
D113	Changed from MR750 (IPN 001-00011-60) to MR2520L (IPN 001-00012-90) to provide overvoltage transient suppression (750087/88/89/90/91/92).	
IC204	Changed from LMC622CM to LM358 (710382).	
R123, R158	Changed from 1k resistors (IPN 036-14100-00) to BA592 diodes (IPN 001-10059-20) to allow external power meters to read zero (710978).	
R207	Changed from 47k (IPN 036-15470-10) to 4k7 (IPN 036-14470-10)	100k thermistor assembly replaced with 10k item; values of associated components changed accordingly (710394/411/447).
R209	Changed from 1k5 (IPN 036-14150-10) to 390Ω (IPN 036-13390-10)	
R210	Changed from 4k7 (IPN 036-14470-10) to 390Ω (IPN 036-13390-10)	
R213	Changed from 3k9 (IPN 036-14390-00) to 560Ω (IPN 036-13560-00)	
R218	Changed from 390Ω (IPN 036-13390-10) to 100Ω (IPN 036-13100-10)	
R219	Changed from 100k NTC (IPN 045-06100-05) to 10k NTC (IPN 045-05100-02)	
R220	Changed from 47k (IPN 036-15470-10) to 4k7 (IPN 036-14470-10)	
R222	Changed from 47k (IPN 036-15470-10) to 4k7 (IPN 036-14470-10)	
R224	Changed from 1k5 (IPN 036-14150-10) to 390Ω (IPN 036-13390-10)	
R228	Changed from 4k7 (IPN 036-14470-10) to 390Ω (IPN 036-13390-10)	
R229	Changed from 56k (IPN 036-15560-10) to 6k8 (IPN 036-14680-10)	
349-00020-36	The two M3x8 Torx screws which secure the module into the rack frame have been replaced by M3x8 Pozidriv screws (IPN 349-00020-55) (750101/2/3/5/6).	

Parts List Amendments - Continued

This page is provided for entering future amendments to the parts list.

Copyright TEL

Note: The T838 and T839 share the same basic design and are built on the same PCB. While most components in this design are common to both products, there are a number of components that are placed in only one product.

Because the circuit diagrams for this design cover both products, we have indicated on the diagrams those components which are placed only in the T838 by enclosing them in a labelled box. The circuit reference for each of these components is also prefixed with the "*"character.

The "*" character is used in this parts list to indicate components used only in the T838.

Ref	Var	IPN	Description
C129		015-23680-08	CAP CER 0805 680P 10% X7R 50V
C131		015-27100-10	CAP CER 0805 1M+80-20% Y5V 16V
C132		015-24100-08	CAP CER 0805 1N 10% X7R 50V
C133		015-23680-08	CAP CER 0805 680P 10% X7R 50V
C137		015-23680-08	CAP CER 0805 680P 10% X7R 50V
C138		015-24470-08	CAP CER 0805 4N7 10% X7R 50V
C139		015-23680-08	CAP CER 0805 680P 10% X7R 50V
C141		014-07100-02	CAP TANT CHIP 1U0 3.2 X 1.6MM
C143		015-23680-08	CAP CER 0805 680P 10% X7R 50V
C145		015-23680-08	CAP CER 0805 680P 10% X7R 50V
C147		015-24470-08	CAP CER 0805 4N7 10% X7R 50V
C149		015-23680-08	CAP CER 0805 680P 10% X7R 50V
C151		015-23680-08	CAP CER 0805 680P 10% X7R 50V
C153		015-23680-08	CAP CER 0805 680P 10% X7R 50V
C155		015-25100-08	CAP CER 0805 10N 10% X7R 50V
C159		015-23680-08	CAP CER 0805 680P 10% X7R 50V
C161		015-23680-08	CAP CER 0805 680P 10% X7R 50V
C162		015-23680-08	CAP CER 0805 680P 10% X7R 50V
C164		015-24470-08	CAP CER 0805 4N7 10% X7R 50V
C165		015-23680-08	CAP CER 0805 680P 10% X7R 50V
C167		015-24100-08	CAP CER 0805 1N 10% X7R 50V
C169		014-07470-03	L) CAP TANT SMD 4U7 35V 20%
C171		015-24470-08	CAP CER 0805 4N7 10% X7R 50V
C173		015-23680-08	CAP CER 0805 680P 10% X7R 50V
C174		015-23680-08	CAP CER 0805 680P 10% X7R 50V
C176		015-06100-08	CAP CER 1206 100N 10% X7R 50V
C178		015-25100-08	CAP CER 0805 10N 10% X7R 50V
C179		015-06150-08	CAP CER1206150N10% X7R25VW 25V
C180		015-23680-08	CAP CER 0805 680P 10% X7R 50V
C181		015-23100-01	CAP CER 0805 100P 5% NPO 50V
C182		015-24470-08	CAP CER 0805 4N7 10% X7R 50V
C184		015-25100-08	CAP CER 0805 10N 10% X7R 50V
C185		015-23680-08	CAP CER 0805 680P 10% X7R 50V
C186		015-23680-08	CAP CER 0805 680P 10% X7R 50V
C187		015-06100-08	CAP CER 1206 100N 10% X7R 50V
C188		014-08100-00	CAP TANT CHIP 10M 16VW +-20%
C189		015-25100-08	CAP CER 0805 10N 10% X7R 50V
C190		015-23680-08	CAP CER 0805 680P 10% X7R 50V
C192		015-06100-08	CAP CER 1206 100N 10% X7R 50V
C193		015-06100-08	CAP CER 1206 100N 10% X7R 50V
C195		014-08100-00	CAP TANT CHIP 10M 16VW +-20%
C201		014-07470-03	L) CAP TANT SMD 4U7 35V 20%
*C203		015-03680-06	CAP CER 1210 680P NPO200VGRM42
*C204		015-03680-06	CAP CER 1210 680P NPO200VGRM42
C205		015-06100-08	CAP CER 1206 100N 10% X7R 50V
*C206		015-03680-06	CAP CER 1210 680P NPO200VGRM42
C207		015-06100-08	CAP CER 1206 100N 10% X7R 50V
C215		015-23680-08	CAP CER 0805 680P 10% X7R 50V
C216		015-24470-08	CAP CER 0805 4N7 10% X7R 50V
C218		015-23680-08	CAP CER 0805 680P 10% X7R 50V
C220		015-23680-08	CAP CER 0805 680P 10% X7R 50V
C221		015-06100-08	CAP CER 1206 100N 10% X7R 50V
C222		015-24470-08	CAP CER 0805 4N7 10% X7R 50V
C223		015-24100-08	CAP CER 0805 1N 10% X7R 50V
C224		015-23680-08	CAP CER 0805 680P 10% X7R 50V
C225		015-03680-06	CAP CER 1210 680P NPO200VGRM42
C226		015-23680-08	CAP CER 0805 680P 10% X7R 50V
C227		015-03680-06	CAP CER 1210 680P NPO200VGRM42
C229		015-03680-03	CAP CER 680P 5% NPO100V GRH111
C259		015-23680-08	CAP CER 0805 680P 10% X7R 50V
C261		015-24470-08	CAP CER 0805 4N7 10% X7R 50V
C268		029-02220-02	CAP MICA 5 CASE 22P 5%
C270		029-02560-03	CAP MICA 10 CASE 56P 2%
C271		029-02470-03	CAP MICA 10 CASE 47P 2%
C272		029-02560-03	CAP MICA 10 CASE 56P 2%
C273		029-02220-02	CAP MICA 5 CASE 22P 5%
C294		015-23680-08	CAP CER 0805 680P 10% X7R 50V
C295		015-24470-08	CAP CER 0805 4N7 10% X7R 50V
C297		015-23680-08	CAP CER 0805 680P 10% X7R 50V
C298		015-24470-08	CAP CER 0805 4N7 10% X7R 50V
D101		001-10000-70	(S) DIODE SMD BAV70 D-SW SOT23
D103		008-00013-32	(S) LED 3 RED LO CURRENT NO MTG
D105		001-10000-70	(S) DIODE SMD BAV70 D-SW SOT23
D107		008-00013-35	(S) LED 3 GRN LO CURRENT NO MTG
D109		008-00013-32	(S) LED 3 RED LO CURRENT NO MTG
D111		001-10000-70	(S) DIODE SMD BAV70 D-SW SOT23
D113		001-00011-60	(S) DIODE SR2607 -- USE MR750
D201		001-00013-45	(S) DIODE SCHTTKY 1SS97/2
D202		001-10000-70	(S) DIODE SMD BAV70 D-SW SOT23
D203		001-00013-45	(S) DIODE SCHTTKY 1SS97/2
IC101		002-10003-24	(S) IC SMD 324 4X O-AMP SO14
IC103		002-10003-24	(S) IC SMD 324 4X O-AMP SO14
IC105		002-10003-58	(S) IC SMD LM358 DUAL O-AMP
IC107		002-10003-17	(S) IC LM317L REG S0-8 100MA
IC109		002-10003-17	(S) IC LM317L REG S0-8 100MA
#IC201	10	004-00687-02	MODULE M68702L 135-160MHZ 60W
#IC201	20	004-00687-03	MODULE M68702H 150-174MHZ 60W
IC204		002-10006-62	(S)IC SMD LMC662CM 2X O-AMP
L101		065-10004-20	BEAD FE SMD CBD 4.6/3/3-4S2
L103		065-10004-20	BEAD FE SMD CBD 4.6/3/3-4S2
L105		065-10004-20	BEAD FE SMD CBD 4.6/3/3-4S2
*L201		056-10330-02	(L) IND SMD 330NH
L203		065-10004-20	BEAD FE SMD CBD 4.6/3/3-4S2
L206		056-14150-02	(L) IND SMD 1.5UH
L208		056-14150-02	(L) IND SMD 1.5UH
L215		052-08340-40	COIL A/W 4T/4.0MM SMD 0.8MM
L217		052-08340-40	COIL A/W 4T/4.0MM SMD 0.8MM
L233		056-10330-02	(L) IND SMD 330NH
L239		056-10330-02	(L) IND SMD 330NH
L241		052-08360-20	COIL A/W 2T/6.0MM SMD 0.8MM
L243		052-08340-20	COIL A/W 2T/4.0MM SMD 0.8MM
L245		052-08345-10	COIL A/W 1T/4.5MM SMD 0.8MM
L247		052-08340-20	COIL A/W 2T/4.0MM SMD 0.8MM
L248		052-08345-10	COIL A/W 1T/4.5MM SMD 0.8MM
L249		052-08360-20	COIL A/W 2T/6.0MM SMD 0.8MM
L264		056-10330-02	(L) IND SMD 330NH
LINK1		240-00020-68	HEADER 2W PCB MTG STD
LINK2		036-10000-00	RES M/F 0805 ZERO OHM
LINK201		240-00020-59	HEADER 3 W 1 R PCB MTG
PL101		240-00010-55	PLUG 15 W D RANGE W/W PNL MT
Q111		000-10008-57	(S) XSTR SMD BCW70 PNP SOT23 SS
Q113		000-10008-48	(S) XSTR SMD BCW60 NPN SOT23 SS
Q115		000-10008-57	(S) XSTR SMD BCW70 PNP SOT23 SS
Q117		000-10008-17	(S) XSTR SMD BC817-25 NPN SOT23
Q119		000-10008-48	(S) XSTR SMD BCW60 NPN SOT23 SS
Q121		000-10017-00	LS) XSTR SMD BF170LT1 SOT23
Q123		000-10008-57	(S) XSTR SMD BCW70 PNP SOT23 SS
Q125		000-10008-57	(S) XSTR SMD BCW70 PNP SOT23 SS
Q127		000-10008-57	(S) XSTR SMD BCW70 PNP SOT23 SS
Q129		000-10008-17	(S) XSTR SMD BC817-25 NPN SOT23
Q131		000-10017-00	LS) XSTR SMD BF170LT1 SOT23
Q133		000-10008-48	(S) XSTR SMD BCW60 NPN SOT23 SS
Q135		000-10008-17	(S) XSTR SMD BC817-25 NPN SOT23
Q136		000-10008-17	(S) XSTR SMD BC817-25 NPN SOT23
Q137		000-00030-95	(S) XSTR 2N6107 PNP TO220 AF
Q201		000-10008-48	(S) XSTR SMD BCW60 NPN SOT23 SS
R101		036-14100-00	RES M/F 0805 1K 5%
R103		036-15330-00	RES M/F 0805 33K 5%
R104		036-16470-00	RES M/F 0805 470K 5%
R117		036-16220-00	RES M/F 0805 220K 5%
R118		036-15270-00	RES M/F 0805 27K 5%
R119		036-16470-00	RES M/F 0805 470K 5%
R123		036-14100-00	RES M/F 0805 1K 5%
R124		036-16100-00	RES M/F 0805 100K 5%
R125		036-15100-00	RES M/F 0805 10K 5%
R126		036-14100-00	RES M/F 0805 1K 5%
R127		036-15100-00	RES M/F 0805 10K 5%
R128		036-15220-00	RES M/F 0805 22K 5%
R129		036-17100-00	RES M/F 0805 1M 5%
R130		036-14220-00	RES M/F 0805 2K2 5%
R131		036-16180-00	RES M/F 0805 180K 5%
R132		036-14100-00	RES M/F 0805 1K 5%
R133		036-15100-00	RES M/F 0805 10K 5%
R134		036-13470-00	RES M/F 0805 470E 5%
R135		036-13680-00	RES M/F 0805 680E 5%
R136		036-15100-00	RES M/F 0805 10K 5%
R137		036-13470-00	RES M/F 0805 470E 5%
R138		036-15100-00	RES M/F 0805 10K 5%
R141		036-15100-00	RES M/F 0805 10K 5%
R142		036-15100-00	RES M/F 0805 10K 5%
R143		036-15100-00	RES M/F 0805 10K 5%
R144		036-15820-00	RES M/F 0805 82K 5%
R145		036-15470-00	RES M/F 0805 47K 5%
R146		036-14180-00	RES M/F 0805 1K8 5%
R148		036-14820-00	RES M/F 0805 8K2 5%
R149		036-13470-00	RES M/F 0805 470E 5%
R150		036-12220-00	RES M/F 0805 22E 5%
R151		036-15100-00	RES M/F 0805 10K 5%
R152		036-15100-00	RES M/F 0805 10K 5%
R153		036-14680-00	RES M/F 0805 6K8 5%
R154		036-14680-00	RES M/F 0805 6K8 5%
R155		036-13220-00	RES M/F 0805 220E 5%
R156		036-13100-00	RES M/F 0805 100E 5%

Ref	Var	IPN	Description
R157		036-12220-00	RES M/F 0805 22E 5%
R158		036-14100-00	RES M/F 0805 1K 5%
R159		036-15100-00	RES M/F 0805 10K 5%
R160		036-14470-00	RES M/F 0805 4K7 5%
R161		036-14100-00	RES M/F 0805 1K 5%
R162		036-17100-00	RES M/F 0805 1M 5%
R163		036-13680-00	RES M/F 0805 680E 5%
R164		036-14220-00	RES M/F 0805 2K2 5%
R165		036-14100-00	RES M/F 0805 1K 5%
R166		036-13680-00	RES M/F 0805 680E 5%
R168		036-15100-10	RES M/F 0805 10K 1%
R169		036-14100-00	RES M/F 0805 1K 5%
R170		036-14100-00	RES M/F 0805 1K 5%
R171		036-14100-00	RES M/F 0805 1K 5%
R172		036-15100-10	RES M/F 0805 10K 1%
R173		036-13470-00	RES M/F 0805 470E 5%
R174		036-13220-00	RES M/F 0805 220E 5%
R175		036-16220-00	RES M/F 0805 220K 5%
R176		036-15100-00	RES M/F 0805 10K 5%
R177		036-14470-00	RES M/F 0805 4K7 5%
R178		036-16100-00	RES M/F 0805 100K 5%
R179		036-15100-00	RES M/F 0805 10K 5%
R180		036-16150-00	RES M/F 0805 150K 5%
R181		036-14560-00	RES M/F 0805 5K6 5%
R182		036-16100-00	RES M/F 0805 100K 5%
R183		036-14470-00	RES M/F 0805 4K7 5%
R184		036-14100-00	RES M/F 0805 1K 5%
R185		036-03100-02	RES 100E 1206 200V 250MW RC01
R186		036-13100-00	RES M/F 0805 100E 5%
R187		036-03150-03	RES 1218 PWR CHIP 150E 20% 1W
R188		036-13220-00	RES M/F 0805 220E 5%
R189		036-12100-00	RES M/F 0805 10E 5%
R190		036-12220-00	RES M/F 0805 22E 5%
R191		036-14100-10	RES M/F 0805 CHIP 1K 1%
R192		036-13220-10	RES 0805 220E 1%
R193		036-12100-00	RES M/F 0805 10E 5%
R194		036-03220-03	RES 1218 PWR CHIP 220E 20% 1W
R195		036-14220-00	RES M/F 0805 2K2 5%
R196		036-13100-00	RES M/F 0805 100E 5%
R197		036-10000-00	RES M/F 0805 ZERO OHM
*R201		036-03330-03	L) RES 1218 PWR 330E 20% 1W
*R202		036-02100-03	L) RES 1218 PWR 10E 20% 1W
R203		036-02100-02	RES 10E 1206 200V 250MW RC01
*R204		036-03330-03	L) RES 1218 PWR 330E 20% 1W
R205		036-02100-02	RES 10E 1206 200V 250MW RC01
R207		036-15470-10	RES M/F 0805 47K 1%
R209		036-14150-10	RES MF 0805 CHIP 1K5 1%
R210		036-14470-10	RES M/F 0805 CHIP 4K7 1%
R212		036-15100-00	RES M/F 0805 10K 5%
R213		036-14390-00	RES M/F 0805 3K9 5%
R214		036-14470-00	RES M/F 0805 4K7 5%
R218		036-13390-10	RES MF 0805 CHIP 390E 1%
R219			available as sub-assembly only - refer to 16 (045-06100-05) in the mechanical parts list
R220		036-15470-10	RES M/F 0805 47K 1%
R222		036-15470-10	RES M/F 0805 47K 1%
R224		036-14150-10	RES MF 0805 CHIP 1K5 1%
R225		030-03120-00	RES FILM 120E 5% 0.25W 7X2.5
R228		036-14470-10	RES M/F 0805 CHIP 4K7 1%
R229		036-15560-10	RES MF 0805 CHIP 56K 1%
R231		030-03120-00	RES FILM 120E 5% 0.25W 7X2.5
R237		045-04470-00	RES NTC SMD 4K7 5% 20MW
RV101		042-04500-05	RES PRESET SMD 5K CER 4MM SQ
RV103		042-05500-05	RES PRESET SMD 50K CER 4MM SQ
RV105		042-04500-05	RES PRESET SMD 5K CER 4MM SQ
RV107		042-05500-05	RES PRESET SMD 50K CER 4MM SQ
RV109		044-04200-03	RES PRE 2K 10 TURN PNL MTG
RV113		042-06500-05	RES PRESET SMD 500K CER 4MM SQ
RV115		042-04220-05	RES PRESET SMD 2K CER 4MM SQ
SK101		240-10000-05	CONN SMD SKT 8W 2R M-MATCH
SK103		240-10000-05	CONN SMD SKT 8W 2R M-MATCH
*SK203		240-02100-44	SKT COAX MINI JACK PCB MT ANG.

Ref	Var	IPN	Description

Copyright TEL

T838 Mechanical & Miscellaneous Parts (220-01404-03)

IPN	Legend	Description
000-00030-95	9	Q137
004-00687-02/3	14	#IC201
012-04150-01	22	CAP CER F/THRU 1N5 NO LEAD
045-06100-05	16	ASSY 100K NTC FOR MODULE R219
051-00006-02		SOLDER SPRING 1.3MM A4M1877 Support for front panel LED solder joints.
051-00641-01	3	COAX SEMI-RIG N-TYPE EXTN
051-00642-01	28	COAX SEMI-RIG N-TYPE EXTN
065-00010-13	21	BEAD FER 7D 1.9X0.9X3.8
201-00030-02		WIRE T/C 7/0.2 PVC RED Front panel LEDs.
201-00030-10		WIRE T/C 7/0.2 PVC BLACK Front panel LEDs.
201-00050-25		AUTO 154 RED 41/0.3 PVC DC+ from D-range PCB.
201-00050-26		AUTO 154 BLACK 41/0.3 PVC DC- from D-range PCB.
206-00010-11		COAX 50 OHM RG316-U PTFE Coax from BNC connector to *SK203.
219-02591-00	18	LOOM RIBBON 8 WAY FOR PA
219-02592-00		CABLE ASSY RG223/U N TO BNC Exciter/PA connecting cable.
220-01402-02	2	PCB T838/9 TEFLON DIRNL COUPLER
220-01404-03	1	PCB T838/9 PA MODULE DESIGN
240-00010-55	20	PLUG 15 W D RANGE W/W PNL MT PL101
240-00100-43		PLG COAX MINI PIN CRIMP 1.5D Coax from BNC connector to *SK203.
240-02010-54		SKT 15W DRANGE PNL MTG 125 C Matching socket for D-range plug PL101.
240-02100-06	27	SKT COAX N TYPE PNL MTG OP-TER
240-02100-17	29	SKT COAX BNC PNL JAC CRP RG316
240-04020-62		SKT 2 W RECEP SHORTING LINK LINK1
240-06010-14		CLAMP LATCHING 15 W D RANGE Cover for D-range socket.
240-06010-15	25	BLOCK LATCHING 15W D RANGE
240-06010-44	26	HOOD CONN UHF & N-TYPE
303-23120-00	30	COVER A3M2288 HOLE BLANKING
303-23146-00	38	COVER SIDE T838/9PA
308-01007-01	35	HANDLE BASE STATION SERIES II
308-13122-02	6	HEATSINK T838/9 PA COMPLETE
316-06617-00	32	PNL PA NO INP DRV SER II SNGL
319-01152-00	19	SHIELD A3M2250 F/THRU MTG
319-01190-01	4	SHIELD WALL HARM. FILTER
319-01201-00	31	SHIELD LID HARM. FILTER
319-01202-00	5	SHIELD PA CONTROL CIRCUIT
319-30064-00	13	SPACER HSINK RF MODULE
345-00040-16	23	SCRW M3X20MM P/POZ ST BZ
349-00010-59	17	SCRW 6-32 X 3/8 P/PH T/T ZP
349-00020-07	7	SCRW 4-40 X 5/16 P/POZ T/T BLK
349-00020-09	12	SCRW T/T 4-40X3/8 IN P/POZ BLK
349-00020-36	37	LIM)SCREW TT M3X8m PANTORX BLK
352-00010-29	36	NUT M4 NYLOC HEX
353-00010-10	11	WSHR M3 FLAT 7MMX0.6MM ST BZ
356-00010-03	24	TAG SOLDER 3MM LONG M614/3.2
356-00010-05	15	TAG SOLDER 4MM LONG M6144/4.2
360-00010-41	34	BUSH SHORTY BLK
362-00010-07	8	GASKET SIL INSULATING TO-220
362-00010-13	10	BUSH INSULATING 1.1MM TOP HAT
362-00010-33	33	GROMMET LED MTG 3MM
365-00100-20		LABEL WHITE S/A 28X11MM
365-01391-01		LABEL 30X10.8 T/MARK VOID
365-01538-00		LABEL WARNING 60W/PWR CLAMP
369-00010-14		TIE CABLE NYLON 100X2.6MM
399-00010-56		BAG PLASTIC 200X250MM
400-00020-07		SLEEVING 2MM SIL RUBBER
410-00010-43		PKG T296 AMPAC REF 73-46

 Copyright TEL

replace A4 pages D5.2.9/D5.2.10 with A3 pages D5.2.9/D5.2.10

replace A4 pages D5.2.9/D5.2.10 with A3 pages D5.2.9/D5.2.10

Copyright TEL

T838 Grid Reference Index (IPN 220-01404-03)

How To Use This Grid Reference Index

The first digit in the PCB layout reference is a "1" or "2", indicating the top or bottom side layout respectively, and the last two characters give the location of the component on that diagram.

The first digit in the circuit diagram reference is the sheet number, and the last two characters give the location of the component on that sheet.

Note:

This grid reference index covers both the T838 and T839 and is reproduced in both PCB Information sections for your convenience.

Device	PCB	Circuit
*C101	1:E4	1-B8
*C103	1:E4	1-B9
*C105	1:B3	1-D8
*C107	1:B3	1-D9
*C109	1:B3	1-D8
*C111	1:C4	1-D8
*C113	1:B5	1-F8
*C115	1:B5	1-F8
*C117	1:B5	1-F9
*C119	1:B5	1-G8
*C121	1:D4	1-B6
*C123	1:D4	1-B6
*C124	1:E3	1-C6
*C125	1:C4	1-D7
*C127	1:C4	1-D6
C129	1:B3	1-H5
C131	1:B3	1-J6
C132	1:A3	1-K7
C133	1:B4	1-K8
C137	1:B2	1-K8
C138	1:B2	1-L8
C139	1:B4	1-M6
C141	1:B3	1-M8
C143	1:E3	1-E7
C145	1:E3	1-F7
C147	1:D3	1-F6
C149	1:D3	1-F7
C151	1:C5	1-D5
C153	1:B5	1-D3
C155	1:D3	1-G3
C159	1:B3	1-H2
C161	1:B4	1-K4
C162	1:B3	1-L4
C164	1:B3	1-L4
C165	1:B3	1-M4
C167	1:K3	1-P3
C169	1:K3	1-P3
C171	1:K3	1-Q3
C173	1:D4	1-B0
C174	1:E4	1-B0
C176	1:D4	1-E0
C178	1:C4	1-F0
C179	1:D3	1-G2
C180	1:E2	1-H0
C181	1:D3	1-G0
C182	1:D3	1-H1
C184	1:D4	1-G0
C185	1:D2	1-J1
C186	1:E2	1-J0
C187	1:D3	1-K1
C188	1:C2	1-L1
C189	1:C3	1-M1
C190	1:C3	1-N1
C192	1:B2	1-N1
C193	1:B2	1-P1
C195	1:C2	1-Q1
C201	1:J7	2-L5
*C202	1:H3	2-B8
*C203	1:P7	2-C1
*C204	1:M6	2-E1
C205	1:L7	2-I5
*C206	1:P6	2-C1
C207	1:K7	2-K5
*C208	1:H3	2-C8
*C209	1:C5	2-D8
*C210	1:C5	2-E8
*C212	1:D5	2-G9
*C213	1:D4	2-H9
C215	1:D5	2-J8
C216	1:H6	2-B6
*C217	1:P3	2-E3
C218	1:H5	2-C6
*C219	1:P2	2-E3
C220	1:E5	2-D6
C221	1:E5	2-N8
C222	1:E5	2-E6
C223	1:D5	2-G7
C224	1:D5	2-M8
C225	1:L6	2-I4
C226	1:D4	2-H7
C227	1:K6	2-J4
C229	1:H6	2-K4
*C230	1:L4	2-I2
*C231	1:L4	2-I1
*C232	1:K4	2-J1
*C233	1:K4	2-K2
*C234	1:J4	2-L1
*C240	1:H4	2-K1
C259	1:F7	2-Q3
C261	1:F6	2-Q4
C268	1:E6	2-S2
C270	1:D6	2-T2
C271	1:C6	2-T2
C272	1:B6	2-U2
C273	1:B6	2-V2
C294	1:D6	2-R1
C295	1:D6	2-R1
C297	1:C5	2-L8
C298	1:C6	2-L8
D101	1:B3	1-H5
D101	1:B3	1-G5
D103	1:P7	1-K9
D105	1:C2	1-J2
D105	1:C2	1-J2
D107	1:P7	1-K5
D109	1:P6	1-L5
D111	1:C2	1-M1
D111	1:C2	1-M1
D113	1:F7	1-Q2
D201	1:F6	2-Q3
D202	1:D4	2-I8
D202	1:D4	2-I8
D203	1:E6	2-R2
IC101	1:D4	1-C6
IC101	1:D4	1-G0
IC101	1:D4	1-B8
IC101	1:D4	1-C0
IC101	1:D4	1-N0
IC103	1:C4	1-D4
IC103	1:C4	1-J8
IC103	1:C4	1-F0
IC103	1:C4	1-J5
IC103	1:C4	1-E3
IC105	1:D3	1-M0
IC105	1:D3	1-P0
IC105	1:D3	1-G2
IC107	1:D3	1-K1
IC109	1:B2	1-N1
#IC201	1:K7	2-I4
*#IC202	1:K4	2-I1
*IC203	1:N5	2-F2
IC204	1:D5	2-H7
IC204	1:D5	2-H8
IC204	1:D5	2-N8
*IC205	1:G5	2-P2
L101	1:K3	1-P3
L103	1:K2	1-Q3
L105	1:E2	1-K0
*L201	1:P7	2-C1
*L202	1:H3	2-B8
L203	1:L7	2-I6
*L204	1:C5	2-D8
L206	1:H5	2-B7
L208	1:E5	2-D7
*L211	1:P2	2-D3
L215	1:L7	2-I5
L217	1:J7	2-K5
*L223	1:J4	2-K2
*L230	1:L4	2-I3
*L231	1:L4	2-I2
L233	1:F6	2-Q3
*L236	1:H6	2-M2
L239	1:E5	2-R2
L241	1:D6	2-S3
L243	1:C6	2-T3
L245	1:C7	2-T2
L247	1:C6	2-U3
L248	1:D7	2-U2
L249	1:B6	2-V3
L264	1:C6	2-L8
LINK1	1:D3	1-L0
LINK2	1:P6	1-D1
LINK201	1:D5	2-F8
P101	1:A5	1-R9
P103	1:K3	1-R0
P105	1:K2	1-R0
P201	1:B6	2-V3
PL101	1:L3	1-C2
*Q101	1:C3	1-C9
*Q103	1:B3	1-E8
*Q105	1:C4	1-D7
*Q107	1:B5	1-F8
*Q109	1:A5	1-G9
Q111	1:A3	1-J7
Q113	1:A3	1-K6
Q115	1:A3	1-L7
Q117	1:B4	1-K8
Q119	1:B4	1-L6
Q121	1:B3	1-L8
Q123	1:E3	1-E7
Q125	1:E3	1-F7
Q127	1:D3	1-G7
Q129	1:B4	1-L4
Q131	1:B3	1-M5
Q133	1:D4	1-D0
Q135	1:E2	1-H0
Q136	1:E3	1-H0
Q137	1:D2	1-J0
Q201	1:D5	2-K8
R101	1:E4	1-A8
*R102	1:E4	1-A9
R103	1:E4	1-A8
R104	1:E4	1-B9
*R105	1:D4	1-C8
*R106	1:B3	1-C8
*R107	1:C4	1-D7
*R108	1:B3	1-E9
*R109	1:C3	1-E9
*R111	1:B5	1-E8
*R112	1:B5	1-E9
*R113	1:B5	1-F9
*R114	1:C4	1-A6
*R115	1:C5	1-A6
*R116	1:D4	1-A7
R117	1:C4	1-A6
R118	1:D4	1-B6
R119	1:D4	1-C7
*R120	1:E3	1-H7
*R121	1:C4	1-C7
*R122	1:C4	1-D6
R123	1:B4	1-H7
R124	1:B4	1-H8
R125	1:B4	1-H8
R126	1:B3	1-H6
R127	1:A3	1-H7
R128	1:A3	1-J7
R129	1:B4	1-J9
R130	1:B4	1-J8
R131	1:A3	1-J7
R132	1:B5	1-J8
R133	1:A3	1-K7
R134	1:B3	1-K6
R135	1:P7	1-K9
R136	1:A3	1-K7
R137	1:B3	1-K6
R138	1:B4	1-L6

Copyright TEL

Device	PCB	Circuit
R141	1:E3	1-C6
R142	1:E3	1-E7
R143	1:E4	1-F6
R144	1:D3	1-F6
R145	1:E4	1-F7
R146	1:E4	1-G7
R148	1:C5	1-D5
R149	1:C5	1-C4
R150	1:C4	1-F0
R151	1:B5	1-D5
R152	1:B5	1-C3
R153	1:C5	1-F4
R154	1:C5	1-F3
R155	1:D3	1-F2
R156	1:D3	1-F3
R157	1:D4	1-G0
R158	1:C4	1-H3
R159	1:C4	1-H4
R160	1:C3	1-J5
R161	1:B3	1-J3
R162	1:B3	1-K4
R163	1:P8	1-K5
R164	1:B3	1-K4
R165	1:B4	1-K4
R166	1:P7	1-L5
R168	1:E4	1-A1
R169	1:E4	1-A0
R170	1:D4	1-B0
R171	1:E4	1-B0
R172	1:E4	1-B0
R173	1:P6	1-C1
R174	1:P6	1-C1
R175	1:D4	1-C0
R176	1:D4	1-D0
R177	1:D4	1-D0
R178	1:D3	1-E1
R179	1:D4	1-E0
R180	1:D4	1-E0
R181	1:E3	1-F2
R182	1:D4	1-E0
R183	1:D4	1-F1
R184	1:E3	1-G1
R185	1:E2	1-J0
R186	1:D2	1-H1
R187	1:E2	1-H0
R188	1:D2	1-L1
R189	1:D2	1-L1
R190	1:C3	1-M1
R191	1:B2	1-P1
R192	1:B2	1-P1
R193	1:C2	1-Q1
R194	1:D2	1-H0
R195	1:D3	1-J0
R196	1:D3	1-J0
R197	1:D3	1-L1
*R201	1:N6	2-D1
*R202	1:N6	2-D1
R203	1:L7	2-I5
*R204	1:N6	2-D1
R205	1:K7	2-K4
*R206	1:C5	2-E8
R207	1:D4	2-F8
*R208	1:C5	2-G9
R209	1:D5	2-G8
R210	1:D5	2-G8
*R211	1:D4	2-H9
R212	1:D4	2-I8
R213	1:D5	2-E7
R214	1:E4	2-J8
*R215	1:H3	2-B8
*R216	1:P6	2-E2
*R217	1:P6	2-E2
R218	1:E5	2-E7
R219	1:H6	2-B6
R220	1:E5	2-F7
R222	1:D5	2-G7

Device	PCB	Circuit
*R223	1:F2	2-P2
R224	1:D4	2-G7
R225	1:E6	2-R3
R228	1:E4	2-G7
R229	1:D4	2-H7
*R230	1:L4	2-I2
R231	1:F5	2-Q2
*R232	1:K4	2-K1
R237	1:C5	2-K8
RV101	1:C4	1-H8
RV103	1:C4	1-H6
RV105	1:C3	1-J5
RV107	1:C3	1-J3
RV109	1:P5	1-C2
*RV111	1:P5	1-D1
RV113	1:C3	1-D0
RV115	1:C3	1-K0
SK101	1:K3	1-A2
SK103	1:B4	1-B2
*SK201	1:N3	2-D3
*SK203	1:N7	2-C1

Device	PCB	Circuit

Device	PCB	Circuit

Copyright TEL

5.3 T839 Power Amplifier PCB

This section contains the following information.

IPN	Section	Page
220-01404-03	Parts List	5.3.3
	Mechanical & Miscellaneous Parts	5.3.8
	Mechanical Assembly	5.3.9
	Grid Reference Index	5.3.11
	PCB Layout - Bottom Side	5.3.13
	PCB Layout - Top Side	5.3.14
	Control Section Circuit Diagram	5.3.15
	RF & Thermistor Control Sections Circuit Diagram	5.3.16

Copyright TEL

T839 Parts List (IPN 220-01404-03)

How To Use This Parts List

The components listed in this parts list are divided into two main types: those with a circuit reference (e.g. C2, D1, R121, etc.) and those without (miscellaneous and mechanical).

Those with a circuit reference are grouped in alphabetical order and then in numerical order within each group. Each component entry comprises three or four columns: the circuit reference, variant (if applicable), IPN and description. A number in the variant column indicates that this is a variant component which is fitted only to the product type listed. Static sensitive devices are indicated by an (S) at the start of the description column.

The miscellaneous and mechanical section lists the variant and common parts in IPN order. Where possible, a number in the legend column indicates their position in the mechanical assembly drawing.

The Parts List Amendments box below lists component changes that took place after the parts list and diagrams in this section were compiled. These changes (e.g. value changes, added/deleted components, etc.) are listed by circuit reference in alphanumeric order and supersede the information given in the parts list or diagrams. Components without circuit references are listed in IPN order.

Parts List Amendments

C155	Changed from 10n (IPN 015-25100-08) to 100n (IPN 015-26100-08) for T839-20-1020 product type. Circuit reference changed to %C155.	
D101, D105	Removed from the main PCB and replaced by two 1N4148 diodes (IPN 001-50012-00) placed on the D-range PCB: one soldered between PL101 pins 5 and 7 (cathode), the other between PL101 pins 6 and 8 (cathode). To allow external power meters to read zero and still provide meter overvoltage protection (710978).	
D113	Changed from MR750 (IPN 001-00011-60) to MR2520L (IPN 001-00012-90) to provide overvoltage transient suppression (750087/88/89/90/91/92).	
IC204	Changed from LMC622CM to LM358 (710382).	
*L236	Changed from through-hole link (IPN 051-00640-01) to SMD link (IPN 051-00640-02) (710580).	
R123, R158	Changed from 1k resistors (IPN 036-14100-00) to BA592 diodes (IPN 001-10059-20) to allow external power meters to read zero (710978).	
*R206	Changed from 390Ω (IPN 036-13390-10) to 100Ω (IPN 036-13100-10)	100k thermistor assembly replaced with 10k item; values of associated components changed accordingly (710394/411/447).
R207, *R208	Changed from 47k (IPN 036-15470-10) to 4k7 (IPN 036-14470-10)	
R209	Changed from 1k5 (IPN 036-14150-10) to 390Ω (IPN 036-13390-10)	
R210	Changed from 4k7 (IPN 036-14470-10) to 390Ω (IPN 036-13390-10)	
*R211	Changed from 56k (IPN 036-15560-10) to 6k8 (IPN 036-14680-10)	
R213	Changed from 3k9 (IPN 036-14390-00) to 560Ω (IPN 036-13560-00)	
*R215	Changed from 100k NTC (IPN 045-06100-05) to 10k NTC (IPN 045-05100-02)	
R218	Changed from 390Ω (IPN 036-13390-10) to 100Ω (IPN 036-13100-10)	
R219	Changed from 100k NTC (IPN 045-06100-05) to 10k NTC (IPN 045-05100-02)	
R220, R222	Changed from 47k (IPN 036-15470-10) to 4k7 (IPN 036-14470-10)	
R224	Changed from 1k5 (IPN 036-14150-10) to 390Ω (IPN 036-13390-10)	
R228	Changed from 4k7 (IPN 036-14470-10) to 390Ω (IPN 036-13390-10)	
R229	Changed from 56k (IPN 036-15560-10) to 6k8 (IPN 036-14680-10)	

Parts List Amendments - Continued

258-00010-03	Cooling fan: some T839 PAs may be fitted with a different fan (IPN 258-00010-06). If so, a 100µH inductor (IPN 056-00021-02) may be fitted in series in the fan power feed wire with a 10µF capacitor (IPN 025-08100-03) fitted in parallel with this inductor (710977).
349-00020-36	The two M3x8 Torx screws which secure the module into the rack frame have been replaced by M3x8 Pozidriv screws (IPN 349-00020-55) (750101/2/3/5/6).

 Copyright TEL

Note: The T838 and T839 share the same basic design and are built on the same PCB. While most components in this design are common to both products, there are a number of components that are placed in only one product.

Because the circuit diagrams for this design cover both products, we have indicated on the diagrams those components which are placed only in the T839 by enclosing them in a labelled box. The circuit reference for each of these components is also prefixed with the "*"character.

The "*" character is used in this parts list to indicate components used only in the T839.

Ref	Var	IPN	Description
*C101		015-23680-08	CAP CER 0805 680P 10% X7R 50V
*C103		015-23680-08	CAP CER 0805 680P 10% X7R 50V
*C105		015-23680-08	CAP CER 0805 680P 10% X7R 50V
*C107		015-23680-08	CAP CER 0805 680P 10% X7R 50V
*C109		015-23680-08	CAP CER 0805 680P 10% X7R 50V
*C111		015-23680-08	CAP CER 0805 680P 10% X7R 50V
*C113		015-23680-08	CAP CER 0805 680P 10% X7R 50V
*C115		015-23680-08	CAP CER 0805 680P 10% X7R 50V
*C117		015-23680-08	CAP CER 0805 680P 10% X7R 50V
*C119		015-23680-08	CAP CER 0805 680P 10% X7R 50V
*C121		015-23680-08	CAP CER 0805 680P 10% X7R 50V
*C123		015-23680-08	CAP CER 0805 680P 10% X7R 50V
*C124		015-23680-08	CAP CER 0805 680P 10% X7R 50V
*C125		015-23680-08	CAP CER 0805 680P 10% X7R 50V
*C127		015-23680-08	CAP CER 0805 680P 10% X7R 50V
C129		015-23680-08	CAP CER 0805 680P 10% X7R 50V
C131		015-27100-10	CAP CER 0805 1M+80-20% Y5V 16V
C132		015-24100-08	CAP CER 0805 1N 10% X7R 50V
C133		015-23680-08	CAP CER 0805 680P 10% X7R 50V
C137		015-23680-08	CAP CER 0805 680P 10% X7R 50V
C138		015-24470-08	CAP CER 0805 4N7 10% X7R 50V
C139		015-23680-08	CAP CER 0805 680P 10% X7R 50V
C141		014-07100-02	CAP TANT CHIP 1U0 3.2 X 1.6MM
C143		015-23680-08	CAP CER 0805 680P 10% X7R 50V
C145		015-23680-08	CAP CER 0805 680P 10% X7R 50V
C147		015-24470-08	CAP CER 0805 4N7 10% X7R 50V
C149		015-23680-08	CAP CER 0805 680P 10% X7R 50V
C151		015-23680-08	CAP CER 0805 680P 10% X7R 50V
C153		015-23680-08	CAP CER 0805 680P 10% X7R 50V
C155		015-25100-08	CAP CER 0805 10N 10% X7R 50V
C159		015-23680-08	CAP CER 0805 680P 10% X7R 50V
C161		015-23680-08	CAP CER 0805 680P 10% X7R 50V
C162		015-23680-08	CAP CER 0805 680P 10% X7R 50V
C164		015-24470-08	CAP CER 0805 4N7 10% X7R 50V
C165		015-23680-08	CAP CER 0805 680P 10% X7R 50V
C167		015-24100-08	CAP CER 0805 1N 10% X7R 50V
C169		014-07470-03	L) CAP TANT SMD 4U7 35V 20%
C171		015-24470-08	CAP CER 0805 4N7 10% X7R 50V
C173		015-23680-08	CAP CER 0805 680P 10% X7R 50V
C174		015-23680-08	CAP CER 0805 680P 10% X7R 50V
C176		015-06100-08	CAP CER 1206 100N 10% X7R 50V
C178		015-25100-08	CAP CER 0805 10N 10% X7R 50V
C179		015-06150-08	CAP CER1206150N10% X7R25VW 25V
C180		015-23680-08	CAP CER 0805 680P 10% X7R 50V
C181		015-23100-01	CAP CER 0805 100P 5% NPO 50V
C182		015-24470-08	CAP CER 0805 4N7 10% X7R 50V
C184		015-25100-08	CAP CER 0805 10N 10% X7R 50V
C185		015-23680-08	CAP CER 0805 680P 10% X7R 50V
C186		015-23680-08	CAP CER 0805 680P 10% X7R 50V
C187		015-06100-08	CAP CER 1206 100N 10% X7R 50V
C188		014-08100-00	CAP TANT CHIP 10M 16VW +-20%
C189		015-25100-08	CAP CER 0805 10N 10% X7R 50V
C190		015-23680-08	CAP CER 0805 680P 10% X7R 50V
C192		015-06100-08	CAP CER 1206 100N 10% X7R 50V
C193		015-06100-08	CAP CER 1206 100N 10% X7R 50V
C195		014-08100-00	CAP TANT CHIP 10M 16VW +-20%
C201		014-07470-03	L) CAP TANT SMD 4U7 35V 20%
*C202		015-24470-08	CAP CER 0805 4N7 10% X7R 50V
C205		015-06100-08	CAP CER 1206 100N 10% X7R 50V
C207		015-06100-08	CAP CER 1206 100N 10% X7R 50V
*C208		015-23680-08	CAP CER 0805 680P 10% X7R 50V
*C209		015-23680-08	CAP CER 0805 680P 10% X7R 50V
*C210		015-24470-08	CAP CER 0805 4N7 10% X7R 50V
*C212		015-24100-08	CAP CER 0805 1N 10% X7R 50V
*C213		015-23680-08	CAP CER 0805 680P 10% X7R 50V
C215		015-23680-08	CAP CER 0805 680P 10% X7R 50V
C216		015-24470-08	CAP CER 0805 4N7 10% X7R 50V
*C217		015-03680-06	CAP CER 1210 680P NPO200VGRM42
C218		015-23680-08	CAP CER 0805 680P 10% X7R 50V
*C219		015-03680-06	CAP CER 1210 680P NPO200VGRM42
C220		015-23680-08	CAP CER 0805 680P 10% X7R 50V
C221		015-06100-08	CAP CER 1206 100N 10% X7R 50V
C222		015-24470-08	CAP CER 0805 4N7 10% X7R 50V
C223		015-24100-08	CAP CER 0805 1N 10% X7R 50V
C224		015-23680-08	CAP CER 0805 680P 10% X7R 50V
C225		015-03680-06	CAP CER 1210 680P NPO200VGRM42
C226		015-23680-08	CAP CER 0805 680P 10% X7R 50V
C227		015-03680-06	CAP CER 1210 680P NPO200VGRM42
C229		015-03680-03	CAP CER 680P 5% NPO100V GRH111
*C230		015-06100-08	CAP CER 1206 100N 10% X7R 50V
*C231		015-03680-06	CAP CER 1210 680P NPO200VGRM42
*C232		015-03680-06	CAP CER 1210 680P NPO200VGRM42
*C233		015-06100-08	CAP CER 1206 100N 10% X7R 50V
*C234		014-07470-03	L) CAP TANT SMD 4U7 35V 20%
*C240		015-03680-03	CAP CER 680P 5% NPO100V GRH111
C259		015-23680-08	CAP CER 0805 680P 10% X7R 50V
C261		015-24470-08	CAP CER 0805 4N7 10% X7R 50V
C268		029-02220-02	CAP MICA 5 CASE 22P 5%
C270		029-02560-03	CAP MICA 10 CASE 56P 2%
C271		029-02470-03	CAP MICA 10 CASE 47P 2%
C272		029-02560-03	CAP MICA 10 CASE 56P 2%
C273		029-02220-02	CAP MICA 5 CASE 22P 5%
C294		015-23680-08	CAP CER 0805 680P 10% X7R 50V
C295		015-24470-08	CAP CER 0805 4N7 10% X7R 50V
C297		015-23680-08	CAP CER 0805 680P 10% X7R 50V
C298		015-24470-08	CAP CER 0805 4N7 10% X7R 50V
D101		001-10000-70	(S) DIODE SMD BAV70 D-SW SOT23
D103		008-00013-32	(S) LED 3 RED LO CURRENT NO MTG
D105		001-10000-70	(S) DIODE SMD BAV70 D-SW SOT23
D107		008-00013-35	(S) LED 3 GRN LO CURRENT NO MTG
D109		008-00013-32	(S) LED 3 RED LO CURRENT NO MTG
D111		001-10000-70	(S) DIODE SMD BAV70 D-SW SOT23
D113		001-00011-60	(S) DIODE SR2607 -- USE MR750
D201		001-00013-45	(S) DIODE SCHTTKY 1SS97/2
D202		001-10000-70	(S) DIODE SMD BAV70 D-SW SOT23
D203		001-00013-45	(S) DIODE SCHTTKY 1SS97/2
IC101		002-10003-24	(S) IC SMD 324 4X O-AMP SO14
IC103		002-10003-24	(S) IC SMD 324 4X O-AMP SO14
IC105		002-10003-58	(S) IC SMD LM358 DUAL O-AMP
IC107		002-10003-17	(S) IC LM317L REG S0-8 100MA
IC109		002-10003-17	(S) IC LM317L REG S0-8 100MA
#IC201	10	004-00687-02	MODULE M68702L 135-160MHZ 60W
#IC201	20	004-00687-03	MODULE M68702H 150-174MHZ 60W
*#IC202	10	004-00687-02	MODULE M68702L 135-160MHZ 60W
*#IC202	20	004-00687-03	MODULE M68702H 150-174MHZ 60W
*IC203		051-00005-36	RFPOWER 3DB HYBRID COUPLER
IC204		002-10006-62	(S)IC SMD LMC662CM 2X O-AMP
*IC205		051-00005-36	RFPOWER 3DB HYBRID COUPLER
L101		065-10004-20	BEAD FE SMD CBD 4.6/3/3-4S2
L103		065-10004-20	BEAD FE SMD CBD 4.6/3/3-4S2
L105		065-10004-20	BEAD FE SMD CBD 4.6/3/3-4S2
*L202		056-14150-02	(L) IND SMD 1.5UH
L203		065-10004-20	BEAD FE SMD CBD 4.6/3/3-4S2
*L204		056-14150-02	(L) IND SMD 1.5UH
L206		056-14150-02	(L) IND SMD 1.5UH
L208		056-14150-02	(L) IND SMD 1.5UH
*L211		056-10330-02	(L) IND SMD 330NH
L215		052-08340-40	COIL A/W 4T/4.0MM SMD 0.8MM
L217		052-08340-40	COIL A/W 4T/4.0MM SMD 0.8MM
*L223		052-08340-40	COIL A/W 4T/4.0MM SMD 0.8MM
*L230		065-10004-20	BEAD FE SMD CBD 4.6/3/3-4S2
*L231		052-08340-40	COIL A/W 4T/4.0MM SMD 0.8MM
L233		056-10330-02	(L) IND SMD 330NH
*L236		051-00640-01	LNK 65.5 COP STPL C/W SLCN SLV
L239		056-10330-02	(L) IND SMD 330NH
L241		052-08360-20	COIL A/W 2T/6.0MM SMD 0.8MM
L243		052-08340-20	COIL A/W 2T/4.0MM SMD 0.8MM
L245		052-08345-10	COIL A/W 1T/4.5MM SMD 0.8MM
L247		052-08340-20	COIL A/W 2T/4.0MM SMD 0.8MM
L248		052-08345-10	COIL A/W 1T/4.5MM SMD 0.8MM
L249		052-08360-20	COIL A/W 2T/6.0MM SMD 0.8MM
L264		056-10330-02	(L) IND SMD 330NH
LINK1		240-00020-68	HEADER 2W PCB MTG STD
LINK2		036-10000-00	RES M/F 0805 ZERO OHM
LINK201		240-00020-59	HEADER 3 W 1 R PCB MTG
PL101		240-00010-55	PLUG 15 W D RANGE W/W PNL MT
*Q101		000-10008-57	(S) XSTR SMD BCW70 PNP SOT23 SS
*Q103		000-10008-17	(S) XSTR SMD BC817-25 NPN SOT23
*Q105		000-10008-17	(S) XSTR SMD BC817-25 NPN SOT23
*Q107		000-10008-57	(S) XSTR SMD BCW70 PNP SOT23 SS
*Q109		000-10008-69	(S) XSTR SMD BC869 PNP 1W SOT89
Q111		000-10008-57	(S) XSTR SMD BCW70 PNP SOT23 SS
Q113		000-10008-48	(S) XSTR SMD BCW60 NPN SOT23 SS
Q115		000-10008-57	(S) XSTR SMD BCW70 PNP SOT23 SS
Q117		000-10008-17	(S) XSTR SMD BC817-25 NPN SOT23
Q119		000-10008-48	(S) XSTR SMD BCW60 NPN SOT23 SS
Q121		000-10017-00	LS) XSTR SMD BF170LT1 SOT23
Q123		000-10008-57	(S) XSTR SMD BCW70 PNP SOT23 SS
Q125		000-10008-57	(S) XSTR SMD BCW70 PNP SOT23 SS
Q127		000-10008-57	(S) XSTR SMD BCW70 PNP SOT23 SS
Q129		000-10008-17	(S) XSTR SMD BC817-25 NPN SOT23
Q131		000-10017-00	LS) XSTR SMD BF170LT1 SOT23
Q133		000-10008-48	(S) XSTR SMD BCW60 NPN SOT23 SS
Q135		000-10008-17	(S) XSTR SMD BC817-25 NPN SOT23

Ref	Var	IPN	Description
Q136		000-10008-17	(S) XSTR SMD BC817-25 NPN SOT23
Q137		000-00030-95	(S) XSTR 2N6107 PNP TO220 AF
Q201		000-10008-48	(S) XSTR SMD BCW60 NPN SOT23 SS
R101		036-14100-00	RES M/F 0805 1K 5%
*R102		036-16220-00	RES M/F 0805 220K 5%
R103		036-15330-00	RES M/F 0805 33K 5%
R104		036-16470-00	RES M/F 0805 470K 5%
*R105		036-15150-00	RES M/F 0805 15K 5%
*R106		036-15150-00	RES M/F 0805 15K 5%
*R107		036-14390-00	RES M/F 0805 3K9 5%
*R108		036-14330-00	RES M/F 0805 3K3 5%
*R109		036-15100-00	RES M/F 0805 10K 5%
*R111		036-14820-00	RES M/F 0805 8K2 5%
*R112		036-14680-00	RES M/F 0805 6K8 5%
*R113		036-14100-00	RES M/F 0805 1K 5%
*R114		036-16100-00	RES M/F 0805 100K 5%
*R115		036-16220-00	RES M/F 0805 220K 5%
*R116		045-04470-00	RES NTC SMD 4K7 5% 20MW
R117		036-16220-00	RES M/F 0805 220K 5%
R118		036-15270-00	RES M/F 0805 27K 5%
R119		036-16470-00	RES M/F 0805 470K 5%
*R121		036-15150-00	RES M/F 0805 15K 5%
*R122		036-14390-00	RES M/F 0805 3K9 5%
R123		036-14100-00	RES M/F 0805 1K 5%
R124		036-16100-00	RES M/F 0805 100K 5%
R125		036-15100-00	RES M/F 0805 10K 5%
R126		036-14100-00	RES M/F 0805 1K 5%
R127		036-15100-00	RES M/F 0805 10K 5%
R128		036-15220-00	RES M/F 0805 22K 5%
R129		036-17100-00	RES M/F 0805 1M 5%
R130		036-14220-00	RES M/F 0805 2K2 5%
R131		036-16180-00	RES M/F 0805 180K 5%
R132		036-14100-00	RES M/F 0805 1K 5%
R133		036-15100-00	RES M/F 0805 10K 5%
R134		036-13470-00	RES M/F 0805 470E 5%
R135		036-13680-00	RES M/F 0805 680E 5%
R136		036-15100-00	RES M/F 0805 10K 5%
R137		036-13470-00	RES M/F 0805 470E 5%
R138		036-15100-00	RES M/F 0805 10K 5%
R141		036-15100-00	RES M/F 0805 10K 5%
R142		036-15100-00	RES M/F 0805 10K 5%
R143		036-15100-00	RES M/F 0805 10K 5%
R144		036-15820-00	RES M/F 0805 82K 5%
R145		036-15470-00	RES M/F 0805 47K 5%
R146		036-14180-00	RES M/F 0805 1K8 5%
R148		036-14820-00	RES M/F 0805 8K2 5%
R149		036-13470-00	RES M/F 0805 470E 5%
R150		036-12220-00	RES M/F 0805 22E 5%
R151		036-15100-00	RES M/F 0805 10K 5%
R152		036-15100-00	RES M/F 0805 10K 5%
R153		036-14680-00	RES M/F 0805 6K8 5%
R154		036-14680-00	RES M/F 0805 6K8 5%
R155		036-13220-00	RES M/F 0805 220E 5%
R156		036-13100-00	RES M/F 0805 100E 5%
R157		036-12220-00	RES M/F 0805 22E 5%
R158		036-14100-00	RES M/F 0805 1K 5%
R159		036-15100-00	RES M/F 0805 10K 5%
R160		036-14470-00	RES M/F 0805 4K7 5%
R161		036-14100-00	RES M/F 0805 1K 5%
R162		036-17100-00	RES M/F 0805 1M 5%
R163		036-13680-00	RES M/F 0805 680E 5%
R164		036-14220-00	RES M/F 0805 2K2 5%
R165		036-14100-00	RES M/F 0805 1K 5%
R166		036-13680-00	RES M/F 0805 680E 5%
R168		036-15100-10	RES M/F 0805 10K 1%
R169		036-14100-00	RES M/F 0805 1K 5%
R170		036-14100-00	RES M/F 0805 1K 5%
R171		036-14100-00	RES M/F 0805 1K 5%
R172		036-15100-10	RES M/F 0805 10K 1%
R173		036-13470-00	RES M/F 0805 470E 5%
R174		036-13220-00	RES M/F 0805 220E 5%
R175		036-16220-00	RES M/F 0805 220K 5%
R176		036-15100-00	RES M/F 0805 10K 5%
R177		036-14470-00	RES M/F 0805 4K7 5%
R178		036-16100-00	RES M/F 0805 100K 5%
R179		036-15100-00	RES M/F 0805 10K 5%
R180		036-16150-00	RES M/F 0805 150K 5%
R181		036-14560-00	RES M/F 0805 5K6 5%
R182		036-16100-00	RES M/F 0805 100K 5%
R183		036-14470-00	RES M/F 0805 4K7 5%
R184		036-14100-00	RES M/F 0805 1K 5%
R185		036-03100-02	RES 100E 1206 200V 250MW RC01
R186		036-13100-00	RES M/F 0805 100E 5%
R187		036-03150-03	RES 1218 PWR CHIP 150E 20% 1W
R188		036-13220-00	RES M/F 0805 220E 5%
R189		036-12100-00	RES M/F 0805 10E 5%
R190		036-12220-00	RES M/F 0805 22E 5%
R191		036-14100-10	RES M/F 0805 CHIP 1K 1%
R192		036-13220-10	RES 0805 220E 1%
R193		036-12100-00	RES M/F 0805 10E 5%
R194		036-03220-03	RES 1218 PWR CHIP 220E 20% 1W
R195		036-14220-00	RES M/F 0805 2K2 5%
R196		036-13100-00	RES M/F 0805 100E 5%
R197		036-10000-00	RES M/F 0805 ZERO OHM
R203		036-02100-02	RES 10E 1206 200V 250MW RC01
R205		036-02100-02	RES 10E 1206 200V 250MW RC01
*R206		036-13390-10	RES MF 0805 CHIP 390E 1%

Ref	Var	IPN	Description
R207		036-15470-10	RES M/F 0805 47K 1%
*R208		036-15470-10	RES M/F 0805 47K 1%
R209		036-14150-10	RES MF 0805 CHIP 1K5 1%
R210		036-14470-10	RES M/F 0805 CHIP 4K7 1%
*R211		036-15560-10	RES MF 0805 CHIP 56K 1%
R212		036-15100-00	RES M/F 0805 10K 5%
R213		036-14390-00	RES M/F 0805 3K9 5%
R214		036-14470-00	RES M/F 0805 4K7 5%
*R215			available as sub-assembly only - refer to 20 (045-06100-05) in the mechanical parts list
*R216		036-03100-02	RES 100E 1206 200V 250MW RC01
*R217		036-03100-02	RES 100E 1206 200V 250MW RC01
R218		036-13390-10	RES MF 0805 CHIP 390E 1%
R219			available as sub-assembly only - refer to 20 (045-06100-05) in the mechanical parts list
R220		036-15470-10	RES M/F 0805 47K 1%
R222		036-15470-10	RES M/F 0805 47K 1%
*R223		039-05050-00	RES TO22050E 50W MP850
R224		036-14150-10	RES MF 0805 CHIP 1K5 1%
R225		030-03120-00	RES FILM 120E 5% 0.25W 7X2.5
R228		036-14470-10	RES M/F 0805 CHIP 4K7 1%
R229		036-15560-10	RES MF 0805 CHIP 56K 1%
*R230		036-02100-02	RES 10E 1206 200V 250MW RC01
R231		030-03120-00	RES FILM 120E 5% 0.25W 7X2.5
*R232		036-02100-02	RES 10E 1206 200V 250MW RC01
R237		045-04470-00	RES NTC SMD 4K7 5% 20MW
RV101		042-04500-05	RES PRESET SMD 5K CER 4MM SQ
RV103		042-05500-05	RES PRESET SMD 50K CER 4MM SQ
RV105		042-04500-05	RES PRESET SMD 5K CER 4MM SQ
RV107		042-05500-05	RES PRESET SMD 50K CER 4MM SQ
RV109		044-04200-03	RES PRE 2K 10 TURN PNL MTG
RV113		042-06500-05	RES PRESET SMD 500K CER 4MM SQ
RV115		042-04220-05	RES PRESET SMD 2K CER 4MM SQ
SK101		240-10000-05	CONN SMD SKT 8W 2R M-MATCH
SK103		240-10000-05	CONN SMD SKT 8W 2R M-MATCH
*SK201		240-02100-44	SKT COAX MINI JACK PCB MT ANG.

Copyright TEL

T839 Mechanical & Miscellaneous Parts (220-01404-03)

IPN	Legend	Description
000-00030-95	15	Q137
004-00687-02/3	18	#IC201, *#IC202
012-04100-05	35	CAP F/THRU 1N SUPPR FLTR S-MTG
012-04150-01	26	CAP CER F/THRU 1N5 NO LEAD
039-05050-00	11	*R223
045-06100-05	20	ASSY 100K NTC FOR MODULE *R215, R219
051-00005-36	9	*IC203, *IC205
051-00006-02		SOLDER SPRING 1.3MM A4M1877 Support for front panel LED solder joints.
051-00642-01	32	COAX SEMI-RIG N-TYPE EXTN
065-00010-13	25	BEAD FER 7D 1.9X0.9X3.8
201-00030-02		WIRE T/C 7/0.2 PVC RED Front panel LEDs.
201-00030-10		WIRE T/C 7/0.2 PVC BLACK Front panel LEDs.
201-00050-25		AUTO 154 RED 41/0.3 PVC DC+ from D-range PCB.
201-00050-26		AUTO 154 BLACK 41/0.3 PVC DC- from D-range PCB.
206-00010-11		COAX 50 OHM RG316-U PTFE Coax from BNC connector to *SK201.
219-02591-00	22	LOOM RIBBON 8 WAY FOR PA
219-02592-00		CABLE ASSY RG223/U N TO BNC Exciter/PA connecting cable.
220-01402-02	2	PCB T838/9 TEFLON DIRNL COUPLER
220-01404-03	1	PCB T838/9 PA MODULE DESIGN
240-00010-55	24	PLUG 15 W D RANGE W/W PNL MT PL101
240-00100-43		PLG COAX MINI PIN CRIMP 1.5D Coax from BNC connector to *SK201.
240-02010-54		SKT 15W DRANGE PNL MTG 125 C Matching socket for D-range plug PL101.
240-02100-06	31	SKT COAX N TYPE PNL MTG OP-TER
240-02100-17	33	SKT COAX BNC PNL JAC CRP RG316
240-04020-62		SKT 2 W RECEP SHORTING LINK LINK1
240-06010-14		CLAMP LATCHING 15 W D RANGE Cover for D-range socket.
240-06010-15	29	BLOCK LATCHING 15W D RANGE
240-06010-44	30	HOOD CONN UHF & N-TYPE
258-00010-03	37	FAN 12V 119X119X25MM TUBE AX
302-05204-00	34	BRKT A3M2314 F/THRU MTG
303-23146-00	48	COVER SIDE T838/9 PA
308-01007-01	45	HANDLE BASE STATION SERIES II
308-13122-02	5	HEATSINK T838/9 PA COMPLETE
308-13125-00	6	HEATSINK T839 COUPLER
316-06651-00	42	PANEL PA 100W REAR DRV SER II
319-01152-00	23	SHIELD A3M2250 F/THRU MTG
319-01190-01	3	SHIELD WALL HARM. FILTER
319-01201-00	41	SHIELD LID HARM. FILTER
319-01202-00	4	SHIELD CONTROL CIRCUIT
319-30064-00	17	SPACER HSINK RF MODULE
345-00040-16	27	SCRW M3X20MM P/POZ ST BZ
349-00010-59	21	SCRW 6-32 X 3/8 P/PH T/T ZP
349-00020-07	8	SCRW 4-40 X 5/16 P/POZ T/T BLK
349-00020-08	7	SCRW T/T 4-40X3/8 CSK POZI BZ Secure *IC203/205 couplers to heatsink.
349-00020-09	13	SCRW T/T 4-40X3/8 IN P/POZ BLK
349-00020-36	47	LIM)SCREW TT M3X8m PANTORX BLK
349-00020-43	40	SCRW T/T M4X12MM P/POZ BZ
349-00020-49	38	SCRW T/T M4X35MM P/POZ BZ
352-00010-04	10	NUT M2.5 MACH HEX ST BZ
352-00010-29	46	NUT M4 NYLOC HEX
353-00010-10	12	WSHR M3 FLAT 7MMX0.6MM ST BZ
356-00010-01	36	TAG SOLDER 3MM SHORT M6132/3.2
356-00010-03	2	TAG SOLDER 3MM LONG M614/3.2
356-00010-05	19	TAG SOLDER 4MM LONG M6144/4.2
357-00010-45	39	CLAMP CABLE 4.8MM P CLIP
360-00010-41	44	BUSH SHORTY BLK
362-00010-07	14	GASKET SIL INSULATING TO-220
362-00010-13	16	BUSH INSULATING 1.1MM TOP HAT
362-00010-33	43	GROMMET LED MTG 3MM
365-00100-20		LABEL WHITE S/A 28X11MM
365-01391-01		LABEL 30X10.8 T/MARK VOID
365-01539-00		LABEL WARNING 120W/PWR CLAMP
369-00010-14		TIE CABLE NYLON 100X2.6MM
399-00010-56		BAG PLASTIC 200X250MM
400-00020-07		SLEEVING 2MM SIL RUBBER
400-00020-30		HEATSHRINK 3MM
410-00010-43		PKG T296 AMPAC REF 73-46

Copyright TEL

replace A4 pages D5.3.9/D5.3.10 with A3 pages D5.3.9/D5.3.10

replace A4 pages D5.3.9/D5.3.10 with A3 pages D5.3.9/D5.3.10

Copyright TEL

T839 Grid Reference Index (IPN 220-01404-03)

How To Use This Grid Reference Index

The first digit in the PCB layout reference is a "1" or "2", indicating the top or bottom side layout respectively, and the last two characters give the location of the component on that diagram.

The first digit in the circuit diagram reference is the sheet number, and the last two characters give the location of the component on that sheet.

Note:

This grid reference index covers both the T838 and T839 and is reproduced in both PCB Information sections for your convenience.

Device	PCB	Circuit
*C101	1:E4	1-B8
*C103	1:E4	1-B9
*C105	1:B3	1-D8
*C107	1:B3	1-D9
*C109	1:B3	1-D8
*C111	1:C4	1-D8
*C113	1:B5	1-F8
*C115	1:B5	1-F8
*C117	1:B5	1-F9
*C119	1:B5	1-G8
*C121	1:D4	1-B6
*C123	1:D4	1-B6
*C124	1:E3	1-C6
*C125	1:C4	1-D7
*C127	1:C4	1-D6
C129	1:B3	1-H5
C131	1:B3	1-J6
C132	1:A3	1-K7
C133	1:B4	1-K8
C137	1:B2	1-K8
C138	1:B2	1-L8
C139	1:B4	1-M6
C141	1:B3	1-M8
C143	1:E3	1-E7
C145	1:E3	1-F7
C147	1:D3	1-F6
C149	1:D3	1-F7
C151	1:C5	1-D5
C153	1:B5	1-D3
C155	1:D3	1-G3
C159	1:B3	1-H2
C161	1:B4	1-K4
C162	1:B3	1-L4
C164	1:B3	1-L4
C165	1:B3	1-M4
C167	1:K3	1-P3
C169	1:K3	1-P3
C171	1:K3	1-Q3
C173	1:D4	1-B0
C174	1:E4	1-B0
C176	1:D4	1-E0
C178	1:C4	1-F0
C179	1:D3	1-G2
C180	1:E2	1-H0
C181	1:D3	1-G0
C182	1:D3	1-H1
C184	1:D4	1-G0
C185	1:D2	1-J1
C186	1:E2	1-J0
C187	1:D3	1-K1
C188	1:C2	1-L1
C189	1:C3	1-M1
C190	1:C3	1-N1
C192	1:B2	1-N1
C193	1:B2	1-P1
C195	1:C2	1-Q1
C201	1:J7	2-L5
*C202	1:H3	2-B8
*C203	1:P7	2-C1
*C204	1:M6	2-E1
C205	1:L7	2-I5
*C206	1:P6	2-C1
C207	1:K7	2-K5
*C208	1:H3	2-C8
*C209	1:C5	2-D8
*C210	1:C5	2-E8
*C212	1:D5	2-G9
*C213	1:D4	2-H9
C215	1:D5	2-J8
C216	1:H6	2-B6
*C217	1:P3	2-E3
C218	1:H5	2-C6
*C219	1:P2	2-E3
C220	1:E5	2-D6
C221	1:E5	2-N8
C222	1:E5	2-E6
C223	1:D5	2-G7
C224	1:D5	2-M8
C225	1:L6	2-I4
C226	1:D4	2-H7
C227	1:K6	2-J4
C229	1:H6	2-K4
*C230	1:L4	2-I2
*C231	1:L4	2-I1
*C232	1:K4	2-J1
*C233	1:K4	2-K2
*C234	1:J4	2-L1
*C240	1:H4	2-K1
C259	1:F7	2-Q3
C261	1:F6	2-Q4
C268	1:E6	2-S2
C270	1:D6	2-T2
C271	1:C6	2-T2
C272	1:B6	2-U2
C273	1:B6	2-V2
C294	1:D6	2-R1
C295	1:D6	2-R1
C297	1:C5	2-L8
C298	1:C6	2-L8
D101	1:B3	1-H5
D101	1:B3	1-G5
D103	1:P7	1-K9
D105	1:C2	1-J2
D105	1:C2	1-J2
D107	1:P7	1-K5
D109	1:P6	1-L5
D111	1:C2	1-M1
D111	1:C2	1-M1
D113	1:F7	1-Q2
D201	1:F6	2-Q3
D202	1:D4	2-I8
D202	1:D4	2-I8
D203	1:E6	2-R2
IC101	1:D4	1-C6
IC101	1:D4	1-G0
IC101	1:D4	1-B8
IC101	1:D4	1-C0
IC101	1:D4	1-N0
IC103	1:C4	1-D4
IC103	1:C4	1-J8
IC103	1:C4	1-F0
IC103	1:C4	1-J5
IC103	1:C4	1-E3
IC105	1:D3	1-M0
IC105	1:D3	1-P0
IC105	1:D3	1-G2
IC107	1:D3	1-K1
IC109	1:B2	1-N1
#IC201	1:K7	2-I4
*#IC202	1:K4	2-I1
*IC203	1:N5	2-F2
IC204	1:D5	2-H7
IC204	1:D5	2-H8
IC204	1:D5	2-N8
*IC205	1:G5	2-P2
L101	1:K3	1-P3
L103	1:K2	1-Q3
L105	1:E2	1-K0
*L201	1:P7	2-C1
*L202	1:H3	2-B8
L203	1:L7	2-I6
*L204	1:C5	2-D8
L206	1:H5	2-B7
L208	1:E5	2-D7
*L211	1:P2	2-D3
L215	1:L7	2-I5
L217	1:J7	2-K5
*L223	1:J4	2-K2
*L230	1:L4	2-I3
*L231	1:L4	2-I2
L233	1:F6	2-Q3
*L236	1:H6	2-M2
L239	1:E5	2-R2
L241	1:D6	2-S3
L243	1:C6	2-T3
L245	1:C7	2-T2
L247	1:C6	2-U3
L248	1:D7	2-U2
L249	1:B6	2-V3
L264	1:C6	2-L8
LINK1	1:D3	1-L0
LINK2	1:P6	1-D1
LINK201	1:D5	2-F8
P101	1:A5	1-R9
P103	1:K3	1-R0
P105	1:K2	1-R0
P201	1:B6	2-V3
PL101	1:L3	1-C2
*Q101	1:C3	1-C9
*Q103	1:B3	1-E8
*Q105	1:C4	1-D7
*Q107	1:B5	1-F8
*Q109	1:A5	1-G9
Q111	1:A3	1-J7
Q113	1:A3	1-K6
Q115	1:A3	1-L7
Q117	1:B4	1-K8
Q119	1:B4	1-L6
Q121	1:B3	1-L8
Q123	1:E3	1-E7
Q125	1:E3	1-F7
Q127	1:D3	1-G7
Q129	1:B4	1-L4
Q131	1:B3	1-M5
Q133	1:D4	1-D0
Q135	1:E2	1-H0
Q136	1:E3	1-H0
Q137	1:D2	1-J0
Q201	1:D5	2-K8
R101	1:E4	1-A8
*R102	1:E4	1-A9
R103	1:E4	1-A8
R104	1:E4	1-B9
*R105	1:D4	1-C8
*R106	1:B3	1-C8
*R107	1:C4	1-D7
*R108	1:B3	1-E9
*R109	1:C3	1-E9
*R111	1:B5	1-E8
*R112	1:B5	1-E9
*R113	1:B5	1-F9
*R114	1:C4	1-A6
*R115	1:C5	1-A6
*R116	1:D4	1-A7
R117	1:C4	1-A6
R118	1:D4	1-B6
R119	1:D4	1-C7
*R120	1:E3	1-H7
*R121	1:C4	1-C7
*R122	1:C4	1-D6
R123	1:B4	1-H7
R124	1:B4	1-H8
R125	1:B4	1-H8
R126	1:B3	1-H6
R127	1:A3	1-H7
R128	1:A3	1-J7
R129	1:B4	1-J9
R130	1:B4	1-J8
R131	1:A3	1-J7
R132	1:B5	1-J8
R133	1:A3	1-K7
R134	1:B3	1-K6
R135	1:P7	1-K9
R136	1:A3	1-K7
R137	1:B3	1-K6
R138	1:B4	1-L6

Copyright TEL

Device	PCB	Circuit
R141	1:E3	1-C6
R142	1:E3	1-E7
R143	1:E4	1-F6
R144	1:D3	1-F6
R145	1:E4	1-F7
R146	1:E4	1-G7
R148	1:C5	1-D5
R149	1:C5	1-C4
R150	1:C4	1-F0
R151	1:B5	1-D5
R152	1:B5	1-C3
R153	1:C5	1-F4
R154	1:C5	1-F3
R155	1:D3	1-F2
R156	1:D3	1-F3
R157	1:D4	1-G0
R158	1:C4	1-H3
R159	1:C4	1-H4
R160	1:C3	1-J5
R161	1:B3	1-J3
R162	1:B3	1-K4
R163	1:P8	1-K5
R164	1:B3	1-K4
R165	1:B4	1-K4
R166	1:P7	1-L5
R168	1:E4	1-A1
R169	1:E4	1-A0
R170	1:D4	1-B0
R171	1:E4	1-B0
R172	1:E4	1-B0
R173	1:P6	1-C1
R174	1:P6	1-C1
R175	1:D4	1-C0
R176	1:D4	1-D0
R177	1:D4	1-D0
R178	1:D3	1-E1
R179	1:D4	1-E0
R180	1:D4	1-E0
R181	1:E3	1-F2
R182	1:D4	1-E0
R183	1:D4	1-F1
R184	1:E3	1-G1
R185	1:E2	1-J0
R186	1:D2	1-H1
R187	1:E2	1-H0
R188	1:D2	1-L1
R189	1:D2	1-L1
R190	1:C3	1-M1
R191	1:B2	1-P1
R192	1:B2	1-P1
R193	1:C2	1-Q1
R194	1:D2	1-H0
R195	1:D3	1-J0
R196	1:D3	1-J0
R197	1:D3	1-L1
*R201	1:N6	2-D1
*R202	1:N6	2-D1
R203	1:L7	2-I5
*R204	1:N6	2-D1
R205	1:K7	2-K4
*R206	1:C5	2-E8
R207	1:D4	2-F8
*R208	1:C5	2-G9
R209	1:D5	2-G8
R210	1:D5	2-G8
*R211	1:D4	2-H9
R212	1:D4	2-I8
R213	1:D5	2-E7
R214	1:E4	2-J8
*R215	1:H3	2-B8
*R216	1:P6	2-E2
*R217	1:P6	2-E2
R218	1:E5	2-E7
R219	1:H6	2-B6
R220	1:E5	2-F7
R222	1:D5	2-G7

Device	PCB	Circuit
*R223	1:F2	2-P2
R224	1:D4	2-G7
R225	1:E6	2-R3
R228	1:E4	2-G7
R229	1:D4	2-H7
*R230	1:L4	2-I2
R231	1:F5	2-Q2
*R232	1:K4	2-K1
R237	1:C5	2-K8
RV101	1:C4	1-H8
RV103	1:C4	1-H6
RV105	1:C3	1-J5
RV107	1:C3	1-J3
RV109	1:P5	1-C2
*RV111	1:P5	1-D1
RV113	1:C3	1-D0
RV115	1:C3	1-K0
SK101	1:K3	1-A2
SK103	1:B4	1-B2
*SK201	1:N3	2-D3
*SK203	1:N7	2-C1

Device	PCB	Circuit

Device	PCB	Circuit

Copyright TEL

Part E T830 VCO PCB Information

This part of the manual provides the parts list, grid reference index, PCB layouts and circuit diagram for the T830 VCO PCB. There is a detailed table of contents at the start of Section 2.

Section	Title	IPN	Page
1	Introduction		1.1
2	T830 VCO PCB	220-01176-03	2.1

Copyright TEL

1 Introduction

PCB Identification

All PCBs are identified by a unique 10 digit “internal part number” (IPN), e.g. 220-12345-00, which is screen printed onto the PCB (usually on the top side), as shown in the example below:

The last 2 digits of this number define the issue status, which starts at 00 and increments through 01, 02, 03, etc. as the PCB is updated. Some issue PCBs never reach full production status and are therefore not included in this manual. A letter following the 10 digit IPN has no relevance in identifying the PCB for service purposes.

Note: It is important that you identify which issue PCB you are working on so that you can refer to the appropriate set of PCB information.

Parts Lists

The 10 digit numbers (000-00000-00) in this Parts List are “internal part numbers” (IPNs). We can process your spare parts orders more efficiently and accurately if you quote the IPN and provide a brief description of the part.

The components listed in this parts list are divided into two main types: those with a circuit reference (e.g. C2, D1, R121, etc.) and those without (miscellaneous and mechanical).

Those with a circuit reference are grouped in alphabetical order and then in numerical order within each group. Each component entry comprises three or four columns, as shown below:

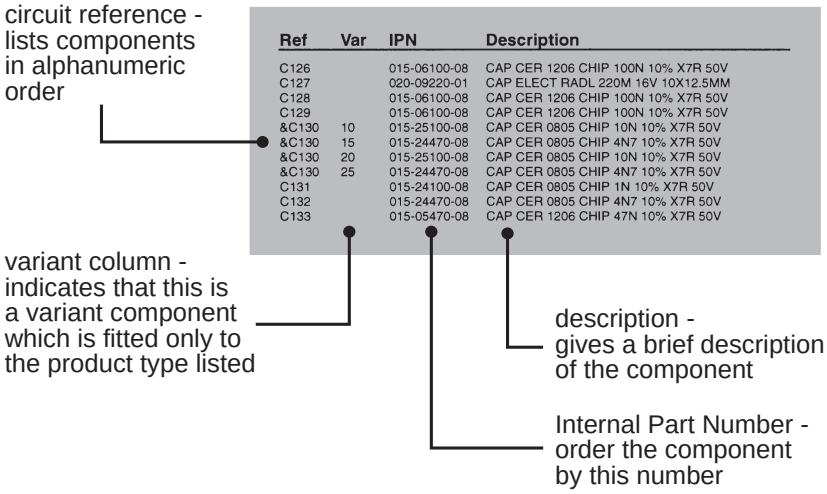

Ref	Var	IPN	Description
C126		015-06100-08	CAP CER 1206 CHIP 100N 10% X7R 50V
C127		020-09220-01	CAP ELECT RADL 220M 16V 10X12.5MM
C128		015-06100-08	CAP CER 1206 CHIP 100N 10% X7R 50V
C129		015-06100-08	CAP CER 1206 CHIP 100N 10% X7R 50V
&C130	10	015-25100-08	CAP CER 0805 CHIP 10N 10% X7R 50V
&C130	15	015-24470-08	CAP CER 0805 CHIP 4N7 10% X7R 50V
&C130	20	015-25100-08	CAP CER 0805 CHIP 10N 10% X7R 50V
&C130	25	015-24470-08	CAP CER 0805 CHIP 4N7 10% X7R 50V
C131		015-24100-08	CAP CER 0805 CHIP 1N 10% X7R 50V
C132		015-24470-08	CAP CER 0805 CHIP 4N7 10% X7R 50V
C133		015-05470-08	CAP CER 1206 CHIP 47N 10% X7R 50V

The mechanical and miscellaneous section lists the variant and common parts in IPN order.

Parts List Amendments

At the front of the parts list is the Parts List Amendments box (an example of which is shown below). This box contains a list of component changes which took place after the parts list and diagrams in this section were compiled. These changes (e.g. value changes, added/deleted components, etc.) are listed by circuit reference in alphanumeric order and supersede the information given in the parts list or diagrams. Components without circuit references are listed in IPN order. The number in brackets at the end of each entry refers to the Tait internal Change Order document.

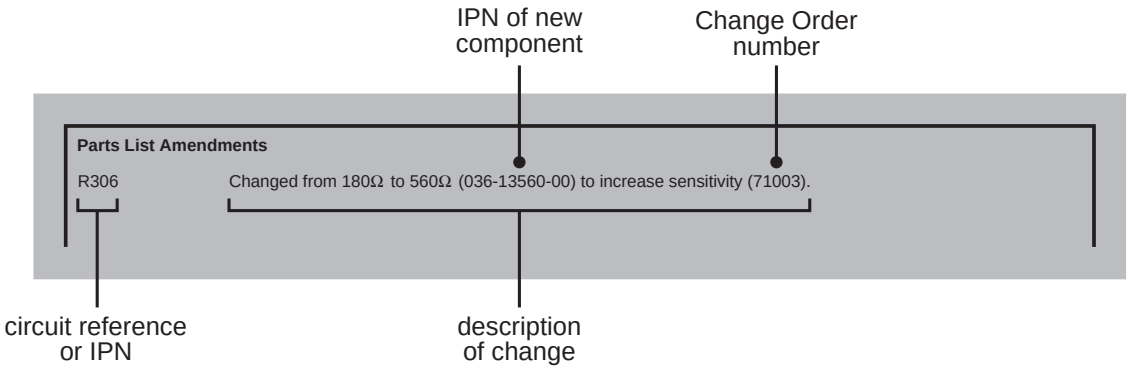

Variant Components

A variant component is one that has the same circuit reference but different value or specification in different product types. Where two products share the same PCB, the term "variant" is also used to describe components unplaced in one product. Variant components have a character prefix, such as "&", "=" or "#", before the circuit reference (e.g. &R100).

The table below explains the variant prefixes used in T800 Series II products:

If the variant prefix is. . .	the component will. . .
&	change according to channel spacing
=	change according to frequency stability
#	change according to frequency band
%	change or be placed/unplaced for special applications
*	be unplaced in one product (where two products share the same PCB)

 Copyright TEL

Grid Reference Index

This section contains a component grid reference index to help you find components and labelled pads on the PCB layouts and circuit diagrams. This index lists the components and pads in alphanumeric order, along with the appropriate alphanumeric grid references, as shown below:

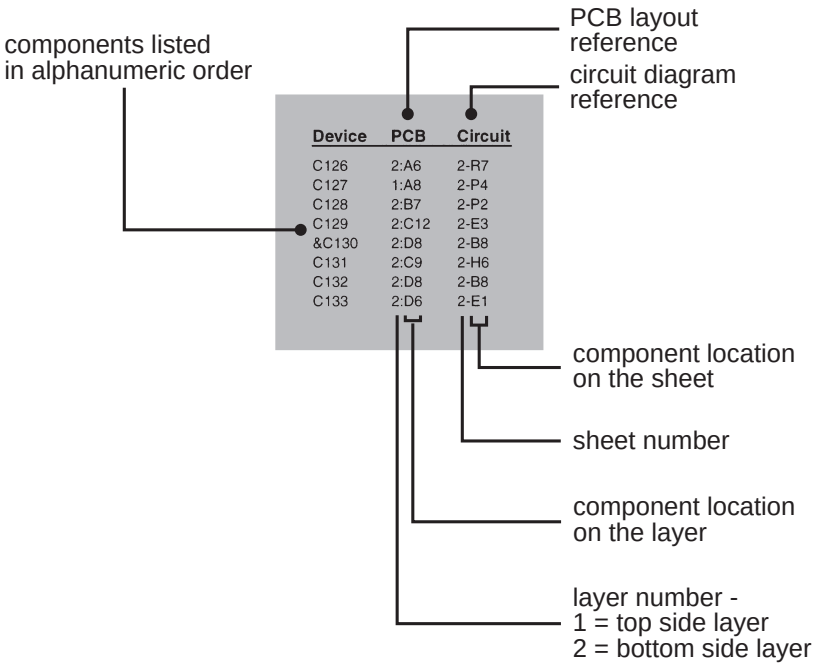

Copyright TEL

2 T830 VCO PCB

This section contains the following information.

IPN	Section	Page
220-01176-03	Parts List	2.3
	Mechanical & Miscellaneous Parts	2.5
	Grid Reference Index	2.6
	PCB Layout - Bottom Side	2.7
	PCB Layout - Top Side	2.8
	Circuit Diagram	2.9

Copyright TEL

T830 VCO Parts List (IPN 220-01176-03)

How To Use This Parts List

The components listed in this parts list are divided into two main types: those with a circuit reference (e.g. C2, D1, R121, etc.) and those without (miscellaneous and mechanical).

Those with a circuit reference are grouped in alphabetical order and then in numerical order within each group. Each component entry comprises three or four columns: the circuit reference, variant (if applicable), IPN and description. A letter in the variant column indicates that this is a variant component which is fitted only to the product type listed. Static sensitive devices are indicated by an (S) at the start of the description column.

The mechanical and miscellaneous section lists the variant and common parts in IPN order.

The Parts List Amendments box below lists component changes that took place after the parts list and diagrams in this section were compiled. These changes (e.g. value changes, added/deleted components, etc.) are listed by circuit reference in alphanumeric order and supersede the information given in the parts list or diagrams. Components without circuit references are listed in IPN order.

Parts List Amendments

#C6	Tx High (A):	incorrectly listed as 22p (015-22220-01) - correct value is 18p (015-22180-01).
	Tx High (A):	changed from 18p (015-22180-01) to 15p (015-22150-01) to improve the loop voltage tuning range at the top of the band (710943/44).

Variant Code	Description	T837 (MHz)
A	Tx high	148 - 174
B	Tx low	136 - 156

Ref	Var	IPN	Description
C2		015-23680-08	CAP CER 0805 680P 10% X7R 50V
#C3	A	015-22180-01	CAP CER 0805 18P 5% NPO 50V
#C3	B	015-22180-01	CAP CER 0805 18P 5% NPO 50V
#C4	A	015-22220-01	CAP CER 0805 22P 5% NPO 50V
#C4	B	015-22220-01	CAP CER 0805 22P 5% NPO 50V
#C5	A	015-22220-01	CAP CER 0805 22P 5% NPO 50V
#C5	B	015-22220-01	CAP CER 0805 22P 5% NPO 50V
#C6	A	015-22220-01	CAP CER 0805 22P 5% NPO 50V
#C6	B	015-22180-01	CAP CER 0805 18P 5% NPO 50V
#C7	A	015-22270-01	CAP CER 0805 27P 5% NPO 50V
#C7	B	015-22330-01	CAP CER 0805 33P 5% NPO 50V
C8		015-23120-01	CAP CER 0805 120P 5% NPO 50V
C9		015-23680-08	CAP CER 0805 680P 10% X7R 50V
C10		015-21220-01	CAP CER 0805 2P2+-1/4P NPO 50V
C11		015-23680-08	CAP CER 0805 680P 10% X7R 50V
C12		015-23680-08	CAP CER 0805 680P 10% X7R 50V
C13		025-08100-02	CAP TANT BEAD 10M 10% 16V
C14		015-23680-08	CAP CER 0805 680P 10% X7R 50V
C15		015-23680-08	CAP CER 0805 680P 10% X7R 50V
C16		015-22560-01	CAP CER 0805 56P 5% NPO 50V
C17		015-22560-01	CAP CER 0805 56P 5% NPO 50V
C18		015-23680-08	CAP CER 0805 680P 10% X7R 50V
C19		015-05470-08	CAP CER 1206 47N 10% X7R 50V
C20		015-23680-08	CAP CER 0805 680P 10% X7R 50V
C21		015-23680-08	CAP CER 0805 680P 10% X7R 50V
C22		015-23680-08	CAP CER 0805 680P 10% X7R 50V
C23		015-21820-01	CAP CER 0805 8P2+-1/4P NPO 50V
C24		015-21680-01	CAP CER 0805 6P8+-1/4P NPO 50V
C25		015-23680-08	CAP CER 0805 680P 10% X7R 50V
#C26	A	036-10000-00	RES M/F 0805 ZERO OHM
#C26	B	036-10000-00	RES M/F 0805 ZERO OHM
CV1		028-02111-00	16PF TRM CAP PISTON PREC.
D1		001-00012-63	S) DIODE VARICAP BB809
D2		001-00012-63	S) DIODE VARICAP BB809
D3		001-00012-63	S) DIODE VARICAP BB809
D4		001-00012-63	S) DIODE VARICAP BB809
L1		056-00021-56	IND FXD 3.3UH AX 10X4.2 PHEN
L2		056-00021-60	IND FXD 330NH AX N/MAG 6.6*2.7
#L3	A	055-01004-00	COIL TROID 103NH 22P 9T T830TX
#L3	B	055-01000-00	COIL TOROID 110NH 22P 10T T830
L4		056-00021-52	IND FXD 820NH 10% NON MAGNETIC
L5		056-00021-56	IND FXD 3.3UH AX 10X4.2 PHEN
L6		052-08135-35	COIL A/W 3.5T/3.5MM HOR 0.8MM
L7		056-00021-56	IND FXD 3.3UH AX 10X4.2 PHEN
L8		052-08130-45	COIL A/W 4.5T/3.0MM HOR 0.8MM
Q1		000-10003-10	S) XSTR SMD BFJ310 JFET UHF
Q2		000-10057-10	S) XSTR SMD BR571 NPN SOT23
Q3		000-10057-10	S) XSTR SMD BR571 NPN SOT23
Q4		000-10008-57	S) XSTR SMD BCW70 PNP SOT23 SS
Q5		000-00032-47	S) XSTR MRF559 NPN XPACK 0.5W
R1		036-12220-00	RES M/F 0805 22E 5%
R3		036-11470-00	RES M/F 0805 4E7 10%
#R5	A	036-13390-00	RES M/F 0805 390E 5%
#R5	B	036-13390-00	RES M/F 0805 390E 5%
R6		036-12560-00	RES M/F 0805 56E 5%
R7		036-14100-00	RES M/F 0805 1K 5%
R8		036-12560-00	RES M/F 0805 56E 5%
R9		036-14100-00	RES M/F 0805 1K 5%
R10		036-12100-00	RES M/F 0805 10E 5%
R11		036-14270-00	RES M/F 0805 2K7 5%
R12		036-13180-00	RES M/F 0805 180E 5%
R13		036-12220-00	RES M/F 0805 22E 5%
R14		036-12560-00	RES M/F 0805 56E 5%
R15		036-12220-00	RES M/F 0805 22E 5%
R16		036-13270-00	RES M/F 0805 270E 5%
R17		036-13270-00	RES M/F 0805 270E 5%
R18		036-12180-00	RES M/F 0805 18E 5%
R19		036-14100-00	RES M/F 0805 1K 5%
R20		036-14680-00	RES M/F 0805 6K8 5%
R21		036-14100-00	RES M/F 0805 1K 5%
R22		036-14220-00	RES M/F 0805 2K2 5%
R23		036-12180-00	RES M/F 0805 18E 5%
R24		036-12220-00	RES M/F 0805 22E 5%
R25		036-13220-00	RES M/F 0805 220E 5%

Copyright TEL

T830 VCO Mechanical & Miscellaneous Parts (220-01176-03)

IPN	Description
220-01176-03	PCB T83X VCO
240-00025-36	PLUG 32WAY 1ROW PC MTG HARWIN
345-00040-10	SCRW M3X6MM P/POZ ST BZ
345-00060-08	SCRW M5 X 16 CH SLOT PLASTIC
350-00016-42	SPACER 5MM HI 8MM ST 2.5MM HO
352-00010-14	NUT M5 HEX PLASTIC T800 TOROID
353-00010-10	WSHR M3 FLAT 7MMX0.6MM ST BZ
353-00010-13	WSHR M3 S/PROOF INT BZ
353-00010-41	WSHR M6 NYLON BULTE LOCK

T830 VCO Grid Reference Index (IPN 220-01176-03)

How To Use This Grid Reference Index

The first digit in the PCB layout reference is a "1" or "2", indicating the top or bottom side layout respectively, and the last two characters give the location of the component on that diagram.

The first digit in the circuit diagram reference is the sheet number, and the last two characters give the location of the component on that sheet.

Device	PCB	Circuit
C2	1:B7	1-B3
#C3	1:C6	1-D4
#C4	1:C6	1-D4
#C5	1:D6	1-D3
#C6	1:C5	1-E4
#C7	1:D5	1-E3
C8	1:D6	1-F3
C9	1:D4	1-H3
C10	1:C4	1-F3
C11	1:C4	1-G4
C12	1:D8	1-F6
C13	1:D7	1-G6
C14	1:C3	1-G5
C15	1:C4	1-H5
C16	1:B3	1-J5
C17	1:B3	1-J4
C18	1:B2	1-J5
C19	1:D1	1-J6
C20	1:D3	1-J7
C21	1:E3	1-K6
C22	1:C3	1-K5
C23	1:C2	1-K4
C24	1:C2	1-L4
C25	1:C2	1-L5
#C26	1:C5	1-D4
C40	1:D5	1-D3
CV1	1:C5	1-D3
D1	1:C7	1-B4
D2	1:C7	1-C4
D3	1:D7	1-B3
D4	1:D7	1-C3
L1	1:C8	1-B3
L2	1:B7	1-C3
#L3	1:B6	1-D4
L4	1:D6	1-E3
L5	1:D7	1-F6
L6	1:A4	1-J4
L7	1:D2	1-K6
L8	1:C2	1-L5
PL-2	2:B4	2-F3
PL-3	2:C3	2-G3
PL-4	2:C8	2-F4
PL-5	2:C1	2-G4
Q1	1:C6	1-F3
Q2	1:D4	1-G3
Q3	1:C4	1-G4
Q4	1:D2	1-K7
Q5	1:B3	1-K5
R1	1:B8	1-B3
R3	1:C7	1-C4
#R5	1:D6	1-F3
R6	1:D4	1-G3
R7	1:D3	1-G3

Device	PCB	Circuit
R8	1:D4	1-G3
R9	1:D3	1-G4
R10	1:C4	1-G4
R11	1:C3	1-G5
R12	1:C4	1-G5
R13	1:B3	1-G6
R14	1:C7	1-F5
R15	1:D8	1-G6
R16	1:B4	1-H4
R17	1:A4	1-H4
R18	1:B4	1-H5
R19	1:B4	1-H6
R20	1:E2	1-J6
R21	1:B2	1-K6
R22	1:D2	1-J7
R23	1:D2	1-K7
R24	1:B2	1-K5
R25	1:C3	1-K5

Device	PCB	Circuit

Device	PCB	Circuit

 Copyright TEL

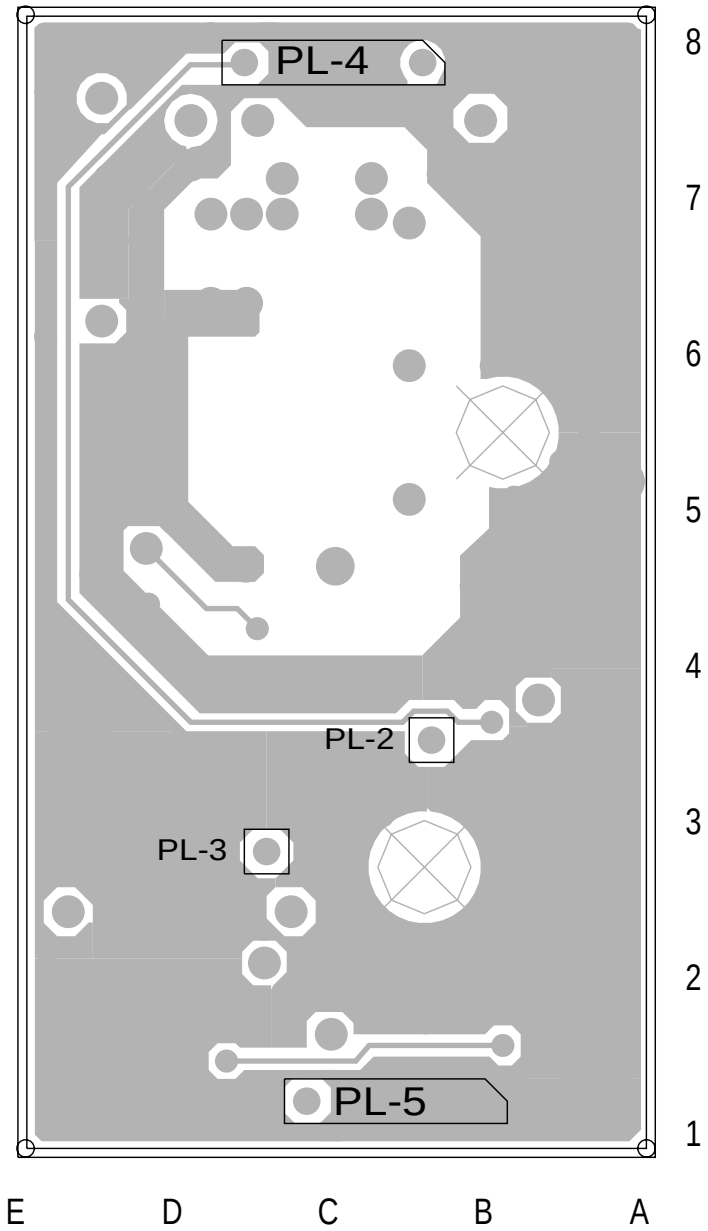

T830 VCO PCB - Bottom Side
220-01176-03

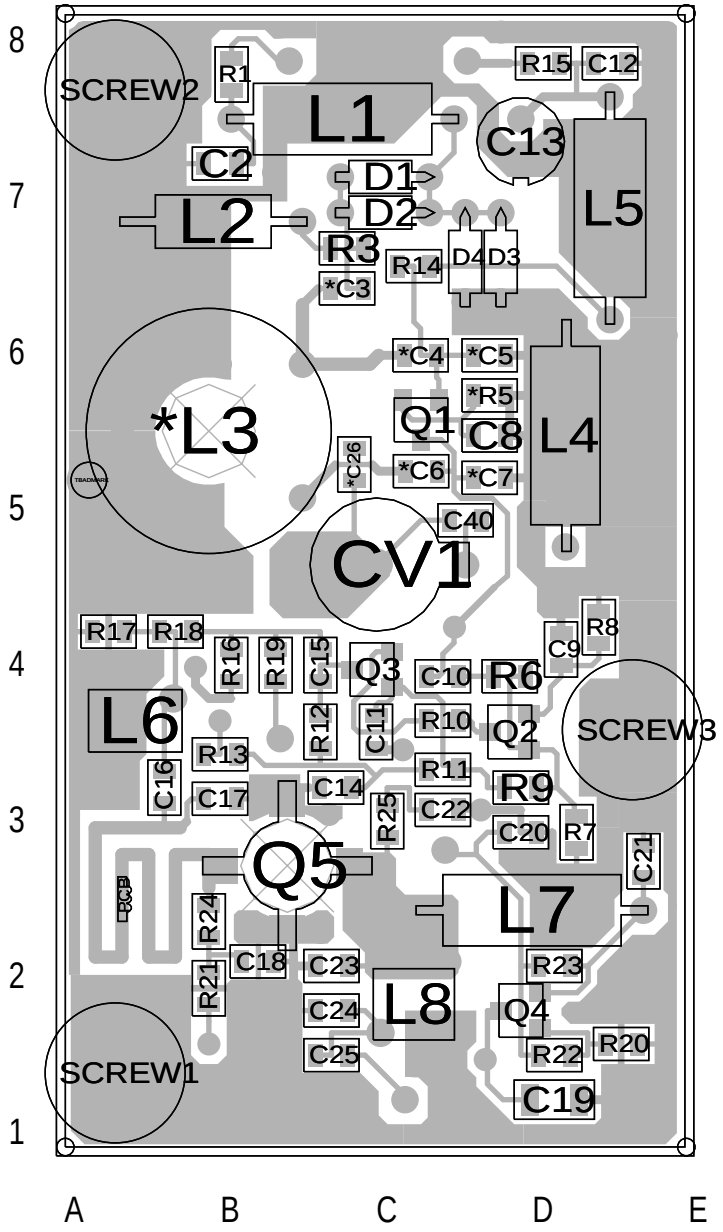

T830 VCO PCB - Top Side
220-01176-03

 Copyright TEL

Part F Installation

This part of the manual is divided into the sections listed below. These sections give a brief description of the basic rack mounting and wiring procedures for the T837 exciter and T839 power amplifier.

Section	Title	Page
1	**T837 Installation**	**1.1**
1.1	Rack Mounting	1.1
1.2	Rack Wiring	1.1
1.3	Power Supply	1.1
1.4	Reverse Polarity & Overvoltage Protection	1.1
2	**T838/839 Installation**	**2.1**
2.1	Rack Mounting	2.1
2.2	Rack Wiring	2.1
2.3	Power Supply	2.2
2.4	Reverse Polarity & Overvoltage Protection	2.2
3	**N-Type Connector Assembly**	**3.1**

Figure	Title	Page
1.1	T800-41-0002 Double Guide Kit	1.1
1.2	T837 Chassis Connectors	1.1
1.3	T837 D-Range 1 Wiring - Rear View	1.1
2.1	T800-45-0001 PA Guide Kit	2.1
2.2	T838/839 Chassis Connectors	2.1
2.3	T838/839 PA In Latched Position	2.1
2.4	T838/839 D-Range Wiring - Rear View	2.1
3.1	N-Type Plug Assembly Details	3.1

Copyright TEL

3 N-Type Connector Assembly

Make sure that any N-type plugs connected to Tait equipment are assembled according to the manufacturer's instructions. It is particularly important that the centre pin in the plug is positioned correctly:

- if the pin is positioned too far back in the plug, it may not make good contact with the socket;
- if the pin protrudes too far (as shown in Figure 3.1), or is not straight, it may damage the socket when the plug is screwed in.

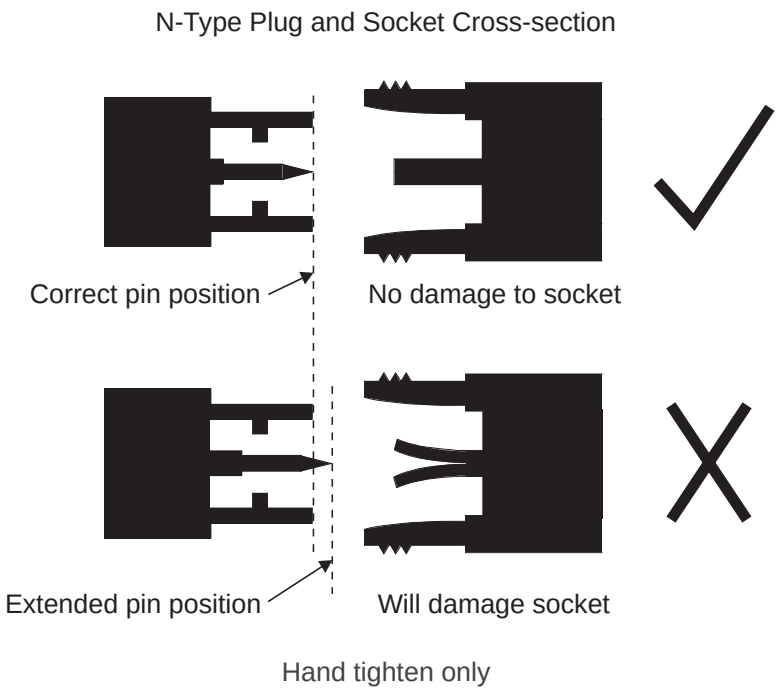

Figure 3.1 N-Type Plug Assembly Details

Copyright TEL

Part G T800-28-0X00 Paging Rack Frame

This part of the manual is divided into the sections listed below. These sections provide some brief information on the T800-28-0X00 paging rack frame and its associated back-plane PCB, the T800-55-0000.

Section	Title	Page
1	**T800-28-0X00 General Information**	**1.1**
2	**T800-55-0000 Backplane PCB**	**2.1**

Figure	Title	Page
2.1	T800-55-0000 PL1 Wiring	2.2
2.2	T800-55-0000 PCB Layout - Top Side (Outer)	2.3
2.3	T800-55-0000 PCB Layout - Bottom Side (Inner)	2.4
2.4	T800-55-0000 Circuit Diagram	2.5

Copyright TEL

1 T800-28-0X00 General Information

The T800-28-0X00 is a single channel rack frame with a maximum output of 100W and provision for a high stability oscillator to enable the paging function, as described below:

Operational Characteristics	• single channel - paging • up to 100W RF output • speaker/programming panel • high stability oscillator • DC line fuse • earth stud • backplane PCB interface
Power Supply Options	• T800-28-0000 AC only • T800-28-0100 external DC only • T800-28-0200 AC and external DC • T800-28-0300 AC and battery • T800-28-0400 external DC and battery • T800-28-0500 AC and external DC and battery
Configuration Options	• duplexer • coaxial relay • fans - single or double • interfaces to TA703-00-XXXX changeover module using TA703-11-0010 installation kit • microphone • DC converter
Mechanical Specifications	• 5U x 483mm (19") to house up to seven modules • height 222mm • width 482mm • depth 322mm plus 50mm clearance space • weight 25W - 12.75kg 50W - 16.5kg 100W - 16.85kg

Copyright TEL

2 T800-55-0000 Backplane PCB

The T800-55-0000 paging backplane PCB is designed for use in the T800-28-0X00 paging rack frame. The PCB mounts across the rear panel of the T800-41-0003 triple module rack frame guide, and has provision for the following modules:

- high stability oscillator
- repeater/link receiver (optional)
- paging exciter/transmitter (25, 50 or 100W).

These modules plug directly into the D-range sockets provided on the inner side of the PCB (both D-range 1 and D-range 2 are provided for). The other side of the PCB features:

- a programming port
- two DIP switches for external channel selection
- one 25-way OEM D-range connector (refer to Figure 2.1)
- one 11-way D-range connector with provision for an external frequency reference.

The T800-55-0000 also allows the fitting of an optional link transmitter/repeater, but will not accept personality PCBs.

Pin	Function
1	Rx line 1
2	Rx aux 2
3	Rx aux 1
4	Rx line 4
5	Tx line 1
6	POCSAG data
7	lock detect
8	Tx line 4
9	signal strength (RSSI)
10	speaker +ve
11	Tx tone input
12	reverse power alarm
13	0V
14	Rx gate
15	Tx key
16	Rx relay common
17	Rx relay normally open
18	Rx inhibit
19	Data/speech (mode select)
20	opto key +
21	opto key -
22	forward power alarm
23	
24	Rx audio 1
25	13.8V (fused)

Figure 2.1 T800-55-0000 PL1 Wiring

 Copyright TEL

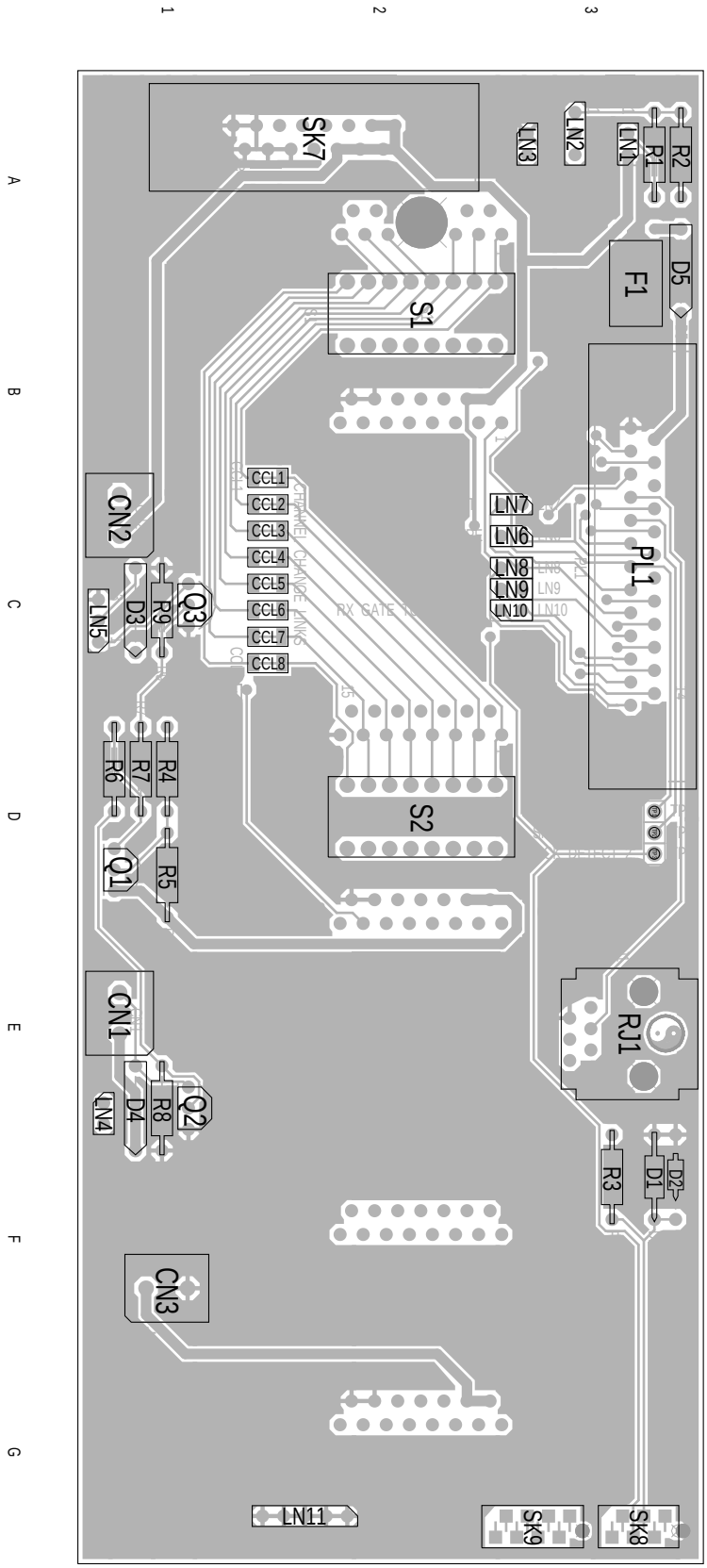

Figure 2.2 T800-55-0000 PCB Layout - Top Side (Outer)

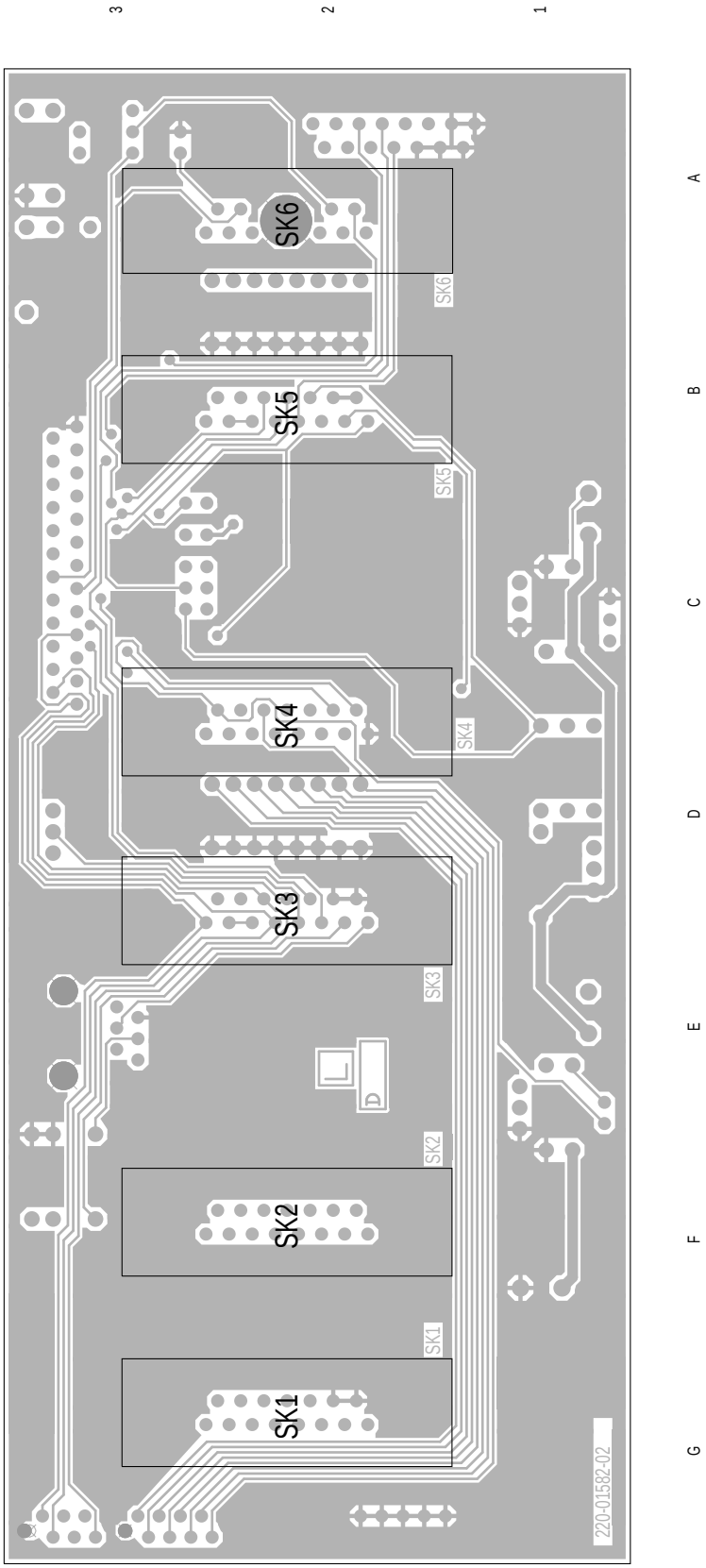

Figure 2.3 T800-55-0000 PCB Layout - Bottom Side (Inner)

 Copyright TEL

Part H T800 Ancillary Equipment

This Part of the manual features a brief description of the major ancillaries that may be used with T800 Series II equipment. For a comprehensive list of available ancillary equipment, please contact your nearest Tait Dealer or Customer Service Organisation.

Section	Page
Programming Kits	**1**
General Ancillaries	**2**
External Frequency Reference	**2**
Rack Frame Guides	**3**
Rack Frame Ancillaries	**5**
Front Panels	**6**
Power Supplies	**7**

Copyright TEL

T800 Ancillary Equipment

Programming Kits

T800-01-0000

The T800-01-0000 kit is used for programming T800 Series II base station equipment using a standard IBM™ (or compatible) PC.

The kit comprises the following items:

PGM800Win programming software user's manual
PGM800Win Windows™ based programming software on 3½" floppy discs
T800-01-0002 programming cable.

T800-01-0001

The T800-01-0001 kit is the same as the T800-01-0000 kit described above, but with the addition of the T800-01-0004 module programming interface.

T800-01-0002

The T800-01-0002 programming cable connects the PC directly to the programming socket on the T800 Series II rack frame speaker panel or backplane PCB, thus enabling T800 Series II modules to be read or programmed while in the rack frame. It can also connect to the programming socket on the T800-01-0004 programming module interface if the module is to be read or programmed while out of the rack frame.

T800-01-0003

The T800-01-0003 programming kit contains a T800-01-0002 programming cable and a T800-01-0004 programming module interface.

T800-01-0004

The T800-01-0004 programming module interface is designed to allow a PC to connect directly to a T800 Series II module. It comprises a small PCB on which is mounted a D-range socket, a programming socket, a Micromatch socket and a DC input connector.

The T800-01-0004 plugs directly into D-range 1 or D-range 2 (selected by a switch on the PCB), or into SK805 in the microcontroller compartment via the supplied ribbon cable loom, and is then connected to the PC with a T800-01-0002 programming cable.

Refer to the T800 Ancillary Equipment Service Manual for more information.

Copyright TEL

General Ancillaries

T004-72 RF Coaxial Relay

The T004-72 is an RF coaxial relay assembly fitted with three female N-type connectors, and comes complete with a mounting bracket and two coaxial cables terminated in male N-type connectors. It can be used, for example, in base station applications where the receiver and transmitter share the same antenna, in which case it can be driven by the T800 Series II transmitter/exciter relay driver.

External Frequency Reference

T801-10 OCXO Module

The T801-10 OCXO module provides a high stability frequency source to which the synthesiser within a T800 Series II base station can be locked. This will provide T800 Series II transmitters with the frequency stability required for simulcast transmission. The master standard within the T801-10 is a high quality ovenised crystal oscillator (OCXO). Three outputs are provided on the rear panel, which allows up to three T800 Series II transmitters to be referenced to the source oscillator.

Refer to M801-10.

 Copyright TEL

Rack Frame Guides

T800-41-0001

The T800-41-0001 rack frame guide is designed to fit into a T800 Series II rack frame and will accept one T800 Series II module (except for power supplies and power amplifiers which must use their own guides). It is supplied disassembled and comprises a top and bottom rail, a rear panel, two D-range sockets and mounting screws.

T800-41-0002

The T800-41-0002 rack frame guide is designed to fit into a T800 Series II rack frame and will accept two T800 Series II modules (except for power supplies and power amplifiers which must use their own guides). It is supplied disassembled and comprises two top and bottom rails, a double width rear panel, four D-range sockets and mounting screws.

T800-41-0003

The T800-41-0003 rack frame guide is designed to fit into a T800 Series II rack frame and will accept three T800 Series II modules (except for power supplies and power amplifiers which must use their own guides). It is supplied disassembled and comprises three top and bottom rails, a triple width rear panel, six D-range sockets and mounting screws.

T800-41-0004

The T800-41-0004 rack frame guide is designed to fit into a T800 Series II rack frame and will accept four T800 Series II modules (except for power supplies and power amplifiers which must use their own guides). It is supplied disassembled and comprises four top and bottom rails, a four-module wide rear panel, eight D-range sockets and mounting screws.

T800-42-0000

The T800-42-0000 rack frame guide will allow a duplexer to be mounted in a T800 Series II rack frame. It occupies a single module space and comprises a folded metal chassis, mounting brackets and screws.

Copyright TEL

T800-42-0001

The T800-42-0001 rack frame guide is the same as the T800-42-0000 described above, but with the addition of a duplexer front panel.

T800-42-0002

The T800-42-0002 rack frame guide is the same as the T800-42-0000 described above, but with the addition of a blank front panel.

T800-43-0000

The T800-43-0000 rack frame guide is designed to fit into a T800 Series II rack frame and will accept one T300 or T1500 Series module (e.g. T318-02, T1511). It is supplied disassembled and comprises a top and bottom rail, two T300 D-range socket boxes and mounting screws. The T800-43-0000 is not compatible with the T800 Series II rack frame backplane PCB. Consult your nearest Tait Dealer or Customer Service Organisation for more details about T300/T1500 Series compatibility with T800 Series II rack frames.

T800-43-0001

The T800-43-0001 is the same as the T800-43-0000 but is supplied with only one D-range socket box.

T800-44-0000

The T800-44-0000 rack frame guide is designed to fit into a T800 Series II rack frame and will accept one T800 Series II power supply. It comprises a top and bottom rail and mounting screws.

T800-45-0000

The T800-45-0000 rack frame guide is designed to fit into a T800 Series II rack frame and will accept one T800 Series II 50W power amplifier. It comprises a top guide stop, a bottom guide rail and mounting screws.

T800-45-0001

The T800-45-0001 rack frame guide is designed to fit into a T800 Series II rack frame and will accept one T800 Series II 100W power amplifier. It comprises a top guide stop, a bottom guide rail, extra mounting brackets for the double width front panel and mounting screws.

 Copyright TEL

Rack Frame Ancillaries

T800-13-0000 Extender Rail

The T800-13-0000 extender rail allows a T800 Series II receiver, exciter or transmitter to be operated out of the rack frame with the covers off for tuning purposes. It is fitted with two 15-way D-range connectors.

T800-14-0000 Extender Rail

The T800-14-0000 extender rail is the same as the T800-13-0000, but is intended for equipment using an external reference (e.g. Quasi-Sync). It thus has one 15-way D-range, and one 11-way D-range incorporating a miniature RF connector.

T800-19-0000 Rack Mounting Fan

The T800-19-0000 fan is designed to fit into the base of any standard 483mm rack frame without affecting its ability to house seven modules. The two mounting rails are secured to the rack frame side panels, and the fan is screwed onto the rails under the required module. The kit contains all mounting hardware.

T800-19-0010 Rack Mounting Fan

The T800-19-0010 fan is designed to fit into the base of any standard 483mm rack frame without affecting its ability to house seven modules. The fan is mounted directly onto the underside of the bottom guide rails with two mounting brackets. The kit contains all mounting hardware.

Copyright TEL

Front Panels

T800-15-0000 Speaker Panel

A 60mm speaker panel fitted with a 4Ω speaker and programming socket. It comes complete with mounting hardware and a cable to connect the programming socket to the backplane PCB.

T800-15-0001 Speaker Panel

A 60mm speaker panel fitted with a 4Ω speaker, complete with mounting hardware.

T800-17-0010 Circuit Breaker Panel

A 60mm front panel fitted with a 10A magnetic circuit breaker. The circuit breaker also functions as an on/off switch to control the supply of power to the rack frame. The T800-17-0010 is intended primarily for use with rack frames powered by batteries (or with a battery back-up supply) and comes complete with mounting hardware.

T800-17-0020 Circuit Breaker Panel

The same as the T800-17-0010, but fitted with a 20A circuit breaker.

T800-40-0000 Blank Panel Fitting Kit

The mounting brackets and screws necessary to fit a T800 Series II 60mm blank front panel into a T800 Series II rack frame.

T800-40-0001 Blank Panel

A T800 Series II 60mm blank panel complete with mounting brackets and screws.

 Copyright TEL

Power Supplies

T808-10-0000 Mains Power Supply

The T808-10-0000 is a switching power supply capable of supplying up to 25A at 11-14V DC. It requires a mains supply of 230V/50Hz or 115V/60Hz (nominal values) which can be internally selected with a switch. The T808-10-0000 is designed to power T800 Series II 100W transmitters (plus receivers, etc.) and requires a T800-44-0000 guide to fit into a T800 Series II rack frame.

Refer to the T800 Ancillary Equipment Service Manual for more information.

Copyright TEL