Laboratory Test Report

ELECTROMAGNETIC COMPATIBILITY

for the

TMBK5B MOBILE Transceiver

Tested In accordance with

47CFR 15.109 & 15.111

Report Revision: 1
Issue Date: 22 May 2025
FCC ID: CASTMBK5B

PREPARED BY: I. D. Russell
Test Technician

CHECKED & APPROVED BY: M. C. James
Laboratory Technical Manager

ACCREDITED
TESTING LABORATORY
№ 9, 577

Tests indicated as not accredited are outside the laboratory's scope of accreditation.

This document must not be reproduced except in full, without the written permission of the Compliance Laboratory Manager.

TABLE OF CONTENTS

REVISION HISTORY **2**
INTRODUCTION **3**
REPORT PREPARED FOR **3**
TEST REQUIREMENTS AND RESULT SUMMARY **4**
STATEMENT OF COMPLIANCE **4**
TEST CONDITIONS **5**
MEASUREMENT FREQUENCY RANGE FOR UNINTENTIONAL RADIATORS **5**
TEST RESULTS **6**
RADIATED SPURIOUS EMISSIONS – UNINTENTIONAL RADIATOR 6
CONDUCTED SPURIOUS EMISSIONS - RECEIVER 10
TEST EQUIPMENT LIST **13**
ANNEX A **15**
TEST SETUP DETAILS 15

Revision History

Date	Revision	Comments
22 May 2025	1	Initial test report

Introduction

Type approval testing of the TMBK5B, 30/35 Watt, MOBILE transceiver in order to demonstrate continued compliance with 47CFR 15.109 & 15.111, after a change in RF power amplifier design.

PCB IPN (old) 220-01815-11
PCB IPN (new) 220-01815-13

Report Prepared For

Tait International Ltd
245 Wooldridge Road
Harewood
Christchurch 8051
New Zealand

DESCRIPTION OF SAMPLE

Manufacturer	Tait International Limited
Equipment:	MOBILE Transceiver
Type:	TMBK5B
Product Code:	T02-00012-XFZR
Serial Number(s):	21737197
Frequency range	762 → 870 MHz
Transmit Power	30/35 W

HARDWARE & SOFTWARE
Quantity: 1

Type	Code and Version	Hardware
Hardware ID	TMBC62-0100_0001	Head
Firmware Package	QIDMR_3.05.09.0118	Head
Hardware ID	TMBB34-K510_0003	Torso
Firmware Package	QIDMR_3.05.09.0118	Torso

TEST REQUIREMENTS AND RESULT SUMMARY

FCC Specification	Test Items	Test Methods	Result
FCC 47 CFR 15.109	Receiver Spurious Emissions (Radiated)	ANSI C63.4 8.3 *	Pass
FCC 47 CFR 15.111	Receiver Spurious Emissions (Conducted)	TIA-603-E 2.1.2	Pass
FCC 47 CFR 15.107	Power Line Conducted Emissions	ANSI C63.4 7.3	N/A1

*Not Accredited
N/A1 not tested as this parameter is unlikely to be affected by the change in the Power Amplifier

Statement of Compliance

The TMBK5B MOBILE transceiver as tested in this report was found to conform to the following standards:

47CFR 15.109 & 15.111

The results obtained in this test report pertain only to the item(s) tested. Teltest does not make any claims of compliance for samples or variants that were not tested.

Test Conditions

Environmental Conditions

All testing was performed between 8 May → 22 May 2025, and under the following conditions:

Ambient Temperature 15° C → 30° C
Relative Humidity 20% → 75%
Standard Test Voltage 13.8 V_{DC}

Measurement Frequency Range for Unintentional Radiators

The measured frequency range is determined in accordance with FCC 47CFR 15.33 (b) (1)

Highest frequency generated or used in the device or on which the device operates or tunes (MHz)	Upper frequency of measurement (MHz)	Upper frequency selected for test
Below 1.705	30	☐
1.705 – 108	1000	☐
108 – 500	2000	☐
500 – 1000	5000	☑
Above 1000	5th Harmonic of highest frequency or 40 GHz, whichever is lower	☐ MHz

Test Results

RADIATED SPURIOUS EMISSIONS – Unintentional Radiator

Note: This test is not accredited

SPECIFICATION: FCC 47 CFR 15.109

GUIDE: ANSI C63.4 8.3

MEASUREMENT PROCEDURE: Direct Measurement

Initial Scan:

1. The EUT is placed in the S-Line TEM cell and emissions are measured from 30 MHz to 800 MHz. Any emission within 10 dB of the limit is then re-tested on the OATS .
2. The EUT is placed in the reverberation chamber and emissions are measured from 800 MHz to the upper frequency required. Any emission within 10 dB of the limit is then re-tested on the OATS.

OATS Measurement:

1. The EUT is placed on a wooden turntable at a distance of three metres from the test antenna. The output terminal is connected to an RF dummy load.
2. The test antenna is raised from 1 m to 4 m to obtain a maximum reading; the turntable is then rotated through 360° to obtain the maximum response of each spurious emission. Valid emissions are determined by switching the EUT on and off.
3. The maximum response of each spurious emission is recorded.

LIMIT CLAUSE: FCC 47CFR 15.109

EMISSION FREQUENCY (MHz)	µVolts / Metre @ 3 Metres
30 → 88	100
88 → 216	150
216 → 960	200
960 →	500

Measurement Uncertainty (dB)	<1GHz ±5.0 dB >1GHz ±5.5 dB

RADIATED SPURIOUS EMISSIONS – Unintentional Radiator

SPECIFICATION: FCC 47CFR 15.109

12.5 kHz Channel Spacing 762.025 MHz Receive / Tx Standby	
Emission Frequency (MHz)	Level (µV/m)
~	~
12.5 kHz Channel Spacing 768.025 MHz Receive / Tx Standby	
Emission Frequency (MHz)	Level (µV/m)
~	~
12.5 kHz Channel Spacing 769.075 MHz Receive / Tx Standby	
Emission Frequency (MHz)	Level (µV/m)
~	~
12.5 kHz Channel Spacing 774.9MHz Receive / Tx Standby	
Emission Frequency (MHz)	Level (µV/m)
~	~
12.5 kHz Channel Spacing 775.975 MHz Receive / Tx Standby	
Emission Frequency (MHz)	Level (µV/m)
~	~
12.5 kHz Channel Spacing 787.5 MHz Receive / Tx Standby	
Emission Frequency (MHz)	Level (µV/m)
~	~
12.5 kHz Channel Spacing 798.025MHz Receive / Tx Standby	
Emission Frequency (MHz)	Level (µV/m)
~	~

Radiated Spurious Emissions - continued

12.5 kHz Channel Spacing	799.075 MHz Receive / Tx Standby
Emission Frequency (MHz)	Level (µV/m)
~	~
12.5 kHz Channel Spacing	804.9 MHz Receive / Tx Standby
Emission Frequency (MHz)	Level (µV/m)
~	~
12.5 kHz Channel Spacing	805.975 MHz Receive / Tx Standby
Emission Frequency (MHz)	Level (µV/m)
~	~
12.5 kHz Channel Spacing	806.025 MHz Receive / Tx Standby
Emission Frequency (MHz)	Level (µV/m)
~	~
12.5 kHz Channel Spacing	815.025 MHz Receive / Tx Standby
Emission Frequency (MHz)	Level (µV/m)
~	~
12.5 kHz Channel Spacing	823.975 MHz Receive / Tx Standby
Emission Frequency (MHz)	Level (µV/m)
~	~
12.5 kHz Channel Spacing	851.025 MHz Receive / Tx Standby
Emission Frequency (MHz)	Level (µV/m)
~	~

Radiated Spurious Emissions – continued

12.5 kHz Channel Spacing 860.025 MHz Receive / Tx Standby	
Emission Frequency (MHz)	Level (µV/m)
~	~
12.5 kHz Channel Spacing 868.975 MHz Receive / Tx Standby	
Emission Frequency (MHz)	Level (µV/m)
~	~
No emissions were detected within 10 dB of Limit.	

CONDUCTED SPURIOUS EMISSIONS - Receiver

SPECIFICATION: FCC 47CFR 15.111

GUIDE: TIA-603-E 2.1.2 (analogue)
TIA-102-CAAA-C 2.1.2 (digital)

MEASUREMENT PROCEDURE:
1. Refer Annex A for Equipment set up.
2. The measurement frequency range is from 30 MHz to the upper frequency limit as determined by FCC 47 CFR 15.33.
3. Spurious emissions which were attenuated more than 20 dB below the limit were not recorded.

LIMIT CLAUSE: FCC 47CFR 15.111

Measurement Uncertainty	≤12.75 GHz ± 2.8 dB

MEASUREMENT RESULTS:

12.5 kHz Channel Spacing 762.025 MHz Receive / Tx Standby	
Emission Frequency (MHz)	Level (nW)
~	~
12.5 kHz Channel Spacing 768.025 MHz Receive / Tx Standby	
Emission Frequency (MHz)	Level (nW)
~	~
12.5 kHz Channel Spacing 769.075 MHz Receive / Tx Standby	
Emission Frequency (MHz)	Level (nW)
~	~
12.5 kHz Channel Spacing 774.9MHz Receive / Tx Standby	
Emission Frequency (MHz)	Level (nW)
~	~
12.5 kHz Channel Spacing 775.975 MHz Receive / Tx Standby	
Emission Frequency (MHz)	Level (nW)
~	~

Conducted Spurious Emissions - continued

12.5 kHz Channel Spacing 787.5 MHz Receive / Tx Standby	
Emission Frequency (MHz)	Level (nW)
~	~
12.5 kHz Channel Spacing 798.025MHz Receive / Tx Standby	
Emission Frequency (MHz)	Level (nW)
~	~
12.5 kHz Channel Spacing 799.075 MHz Receive / Tx Standby	
Emission Frequency (MHz)	Level (nW)
~	~
12.5 kHz Channel Spacing 804.9 MHz Receive / Tx Standby	
Emission Frequency (MHz)	Level (nW)
~	~
12.5 kHz Channel Spacing 805.975 MHz Receive / Tx Standby	
Emission Frequency (MHz)	Level (nW)
~	~
12.5 kHz Channel Spacing 806.025 MHz Receive / Tx Standby	
Emission Frequency (MHz)	Level (nW)
~	~
12.5 kHz Channel Spacing 815.025 MHz Receive / Tx Standby	
Emission Frequency (MHz)	Level (nW)
~	~

Conducted Spurious Emissions - continued

12.5 kHz Channel Spacing 823.975 MHz Receive / Tx Standby	
Emission Frequency (MHz)	Level (nW)
~	~
12.5 kHz Channel Spacing 851.025 MHz Receive / Tx Standby	
Emission Frequency (MHz)	Level (nW)
~	~
12.5 kHz Channel Spacing 860.025 MHz Receive / Tx Standby	
Emission Frequency (MHz)	Level (nW)
~	~
12.5 kHz Channel Spacing 868.975 MHz Receive / Tx Standby	
Emission Frequency (MHz)	Level (nW)
~	~
No emissions were detected within 20 dB of Limit.	

LIMITS:

LIMIT	2 nW (-57 dBm)

TEST EQUIPMENT LIST

* NOTE: Items without calibration dates are calibrated immediately before use, or set using calibrated instruments.

Equipment Type	Information	Manufacturer	Model No	Serial No#	Tait ID	Cal Due
Antenna	18GHz DRG	Emco	DRG3115	2084	E3076	
Antenna	18GHz DRG	Emco	DRG3115	9512-4638	E3560	20-Aug-27
Antenna	Log Periodic	Schwarzbeck	VUSLP	9111-219	E4617	7-Mar-27
Antenna	Log Periodic	Schwarzbeck	VUSLP	9111-503	E111375	7-Mar-27
Antenna	Reverb - 1-18GHz DRG	Schwarzbeck	BBHA 9120 D	9120D-885	E4857	
Antenna	Reverb - 1-18GHz DRG	Schwarzbeck	BBHA 9120 D	9120D-884	E4858	
Coax Cable	OATS Tower Cable	Intelcom	RG214	OATS2	E4622	18-Sep-25
Coax Cable	2m Black	Suhner	RG214HF/Nm/ Nm/2000	TeltestBlack2	E4623	10-Sep-25
Coax Cable	2m Black	Suhner	RG214HF/Nm/ Nm/2000	TeltestBlack3	E4624	10-Sep-25
Coax Cable	Reverb - 4.5m Multiflex 141	TeltestBlue6	MF 141	TeltestBlue6	E4843	12-Sep-25
Coax Cable	Reverb - 2m Multiflex 141	TeltestBlue5	MF 141	TeltestBlue5	E4844	11-Sep-25
Coax Cable	Reverb - 2m Multiflex 141	TeltestBlue4	MF 141	TeltestBlue4	E4845	11-Sep-25
Coax Cable	Reverb - 1m Multiflex 141	TeltestBlue3	MF 141	TeltestBlue3	E4846	12-Sep-25
Coax Cable	Reverb - 1m Multiflex 141	TeltestBlue2	MF 141	TeltestBlue2	E4847	13-Sep-25
Coax Cable	Reverb - 1m Multiflex 141	TeltestBlue1	MF 141	TeltestBlue1	E4848	11-Sep-25
Coax Cable	2m Black	Suhner	RG214HF/Nm/ Nm/2000	TeltestBlack7	E5004	10-Sep-25
Coax Cable	2m Black	Suhner	RG214HF/Nm/ Nm/2000	TeltestBlack8	E5005	10-Sep-25
Coax Cable	3m Blue	Suhner	Sucoflex 126EA	503429/126EA	E5015	11-Sep-25
Coax Cable	1.5m Blue	Suhner	Sucoflex 126EA	502868/126EA	E5028	11-Sep-25
OATS	Controller	Electrometrics	EM-4700	119	E4445	
OATS	Antenna Tower	Electrometrics	EM-4720-2	112	E4447	
OATS	NSA	Tait				1-Nov-25
Power Meter	Reverb - USB interface for NRT Z44	Rohde & Schwarz	NRT Z5	100586	E4852	
Power Meter	Reverb - 0.2 - 4GHz directional power meter	Rohde & Schwarz	NRT Z44	105151	E4853	8-Oct-26
Power Supply	TREVA 1 60V/25A	Agilent	N5767A	US23D6941R	E11372	5-Oct-25
Power Supply	60V/25A	Agilent	N5767A	3111A05573	E4979	9-Oct-26
RF Amplifier	+21.7 dB 1GHz	Tait	ZFL-1000LN	E3660	E3360	7-Aug-25
RF Amplifier	Pre-amplifier	Agilent	87405C	MY47010688	E4941	16-Oct-25
RF Attenuator	10dB 50W	Weinschel	24-10-34	AZ0401	E3388	13-Sep-25
RF Attenuator	30+3dB 350W	Weinschel	67-30-33 & BW-N3W5+	CK9178	E5023	17-Sep-25
RF Attenuator	10dB 50W	Weinschel	24-10-34	BC3293	E4364	13-Sep-25

Equipment Type	Information	Manufacturer	Model No	Serial No#	Tait ID	Cal Due
RF Attenuator	3dB 0.5W	Weinschel	Model 1	CH6863	E5013	13-Sep-25
RF Chamber	S-LINE TEM CELL	Rohde & Schwarz	1089.9296.02	338232/003	E3636	27-May-25
RF Chamber	Reverb - Stirrer controller for reverb chamber	Teseq	Stirrer Controller	29765.1	E4854	
RF Chamber	Reverb - 0.5 - 18GHz Reverberation Chamber	Teseq	RVC XS	29765	E4855	
RF Load	150W	Bird	8166	524	E3625	17-Sep-25
Signal Generator	Analog 3.2GHz	Hewlett Packard	HP8648C	3443U00543	E3558	11-Oct-25
Signal Generator	Digital 3GHz	Agilent	E4438C	MY45093154	E4600	11-Oct-26
Spectrum Analyser	26.5GHz	Agilent	PXA N9030A	MY49432161	E4907	26-Feb-27
Spectrum Analyser	13.2GHz	Agilent	PXA N9030A	US49230269	E4775	16-Oct-25
Temp & Humidity datalogger		TP-Link TAPO	T315	22383M6000671	E11377	2-Feb-26
Testware	Reverb Emissions		TTEL_REVEMIS_3.00.00	-	-	
Testware	S-Line Radiated Emissions		TTEL_SLINERADEM_2.01.00	-	-	

ANNEX A

TEST SETUP DETAILS

Radiated Emissions Set up.

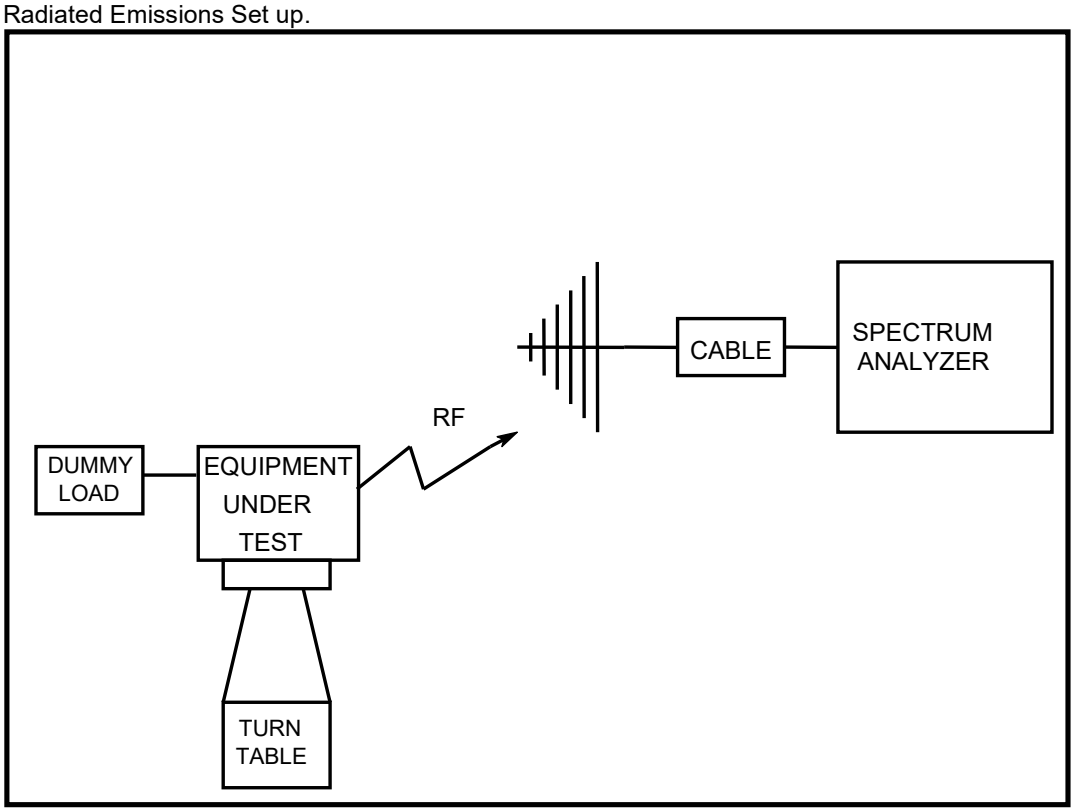

Conducted Emissions Set up.

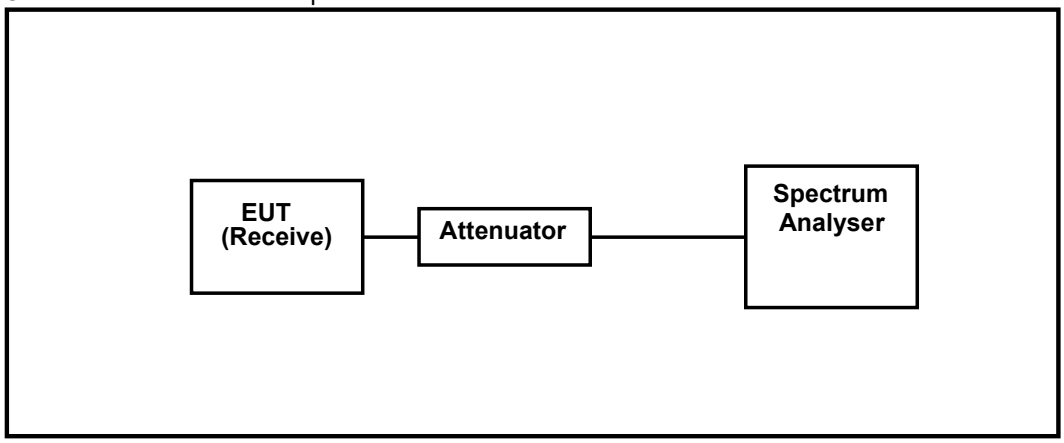

END OF REPORT