APPENDIX B
PLOTS OF THE SAR MEASUREMENTS

Plots of the measured SAR distributions inside the phantom are given in this Appendix for all tested configurations. The spatial peak SAR values were assessed with the procedure described in this report.

Table 15: 450MHz Band SAR Measurement Plot Numbers

Plot 1	Belt Clip Position
Plot 2	Belt Clip Position
Plot 3	Belt Clip Position
Plot 4	Belt Clip Position
Plot 5	Belt Clip Position
	Z-Axis Graphs for Plots 1 to 5
Plot 6	Belt Clip Position with Pouch
Plot 7	Belt Clip Position with Pouch
Plot 8	Belt Clip Position with Pouch
Plot 9	Belt Clip Position with Pouch
Plot 10	Belt Clip Position with Pouch
	Z-Axis Graphs for Plots 5 to 10
Plot 11	Belt Clip Position with Speaker Microphone
Plot 12	Belt Clip Position with Speaker Microphone
Plot 13	Belt Clip Position with Speaker Microphone
Plot 14	Belt Clip Position with Speaker Microphone
Plot 15	Belt Clip Position with Speaker Microphone
	Z-Axis Graphs for Plots 10 to 15

This document shall not be copied or reproduced, except in full without the written permission of the Technical Director , EMC Technologies Pty. Ltd.

Table 16: 450MHz Band SAR Measurement Plot Numbers

Plot 16	Face Frontal Position
Plot 17	Face Frontal Position
Plot 18	Face Frontal Position
Plot 19	Face Frontal Position
Plot 20	Face Frontal Position
	Z-Axis Graphs for Plots 15 to 20
Plot 21	Face Frontal Position with speaker Microphone
Plot 22	Face Frontal Position with speaker Microphone
Plot 23	Face Frontal Position with speaker Microphone
Plot 24	Face Frontal Position with speaker Microphone
Plot 25	Face Frontal Position with speaker Microphone
	Z-Axis Graphs for Plots 20 to 25

Table 17: 450MHz Validation Plot Numbers

Plot 26	Validation 450MHz 10th August 2004
Plot 27	Validation 450MHz 11th August 2004
Plot 28	Validation 450MHz 12th August 2004
	Z-Axis Graphs for Plots 26 to 28

This document shall not be copied or reproduced, except in full without the written permission of the Technical Director , EMC Technologies Pty. Ltd.

Test Date: 10 August 2004
File Name: 450 MHz Belt Clip (DAE442 Probe1377) Ant Wide Band 10-08-04.da4
DUT: Tait Transceiver Ant. Wide Band; Type: TPAH6A; Serial: 21000002

* Communication System: CW 450 MHz; Frequency: 450 MHz; Duty Cycle: 1:1
* Medium parameters used: σ = 0.895242; mho/m, ε_r = 56.1845; ρ = 1000 kg/m^3
- Electronics: DAE3 Sn442; Probe: ET3DV6 - SN1377; ConvF(7.1, 7.1, 7.1)
- Phantom: Flat Phantom 10.1; Serial: P 10.1; Phantom section: Flat 2.2 Section

Channel 1 Test/Area Scan (81x181x1): Measurement grid: dx=20mm, dy=20mm
Reference Value = 35.5 V/m; Power Drift = -0.5 dB
Maximum value of SAR (interpolated) = 2.84 mW/g

Channel 1 Test/Zoom Scan (7x7x7)/Cube 0: Measurement grid: dx=5mm, dy=5mm, dz=5mm
Reference Value = 35.5 V/m; Power Drift = -0.5 dB
Maximum value of SAR (measured) = 2.76 mW/g
Peak SAR (extrapolated) = 4.1 W/kg
SAR(1 g) = 2.65 mW/g; SAR(10 g) = 1.94 mW/g

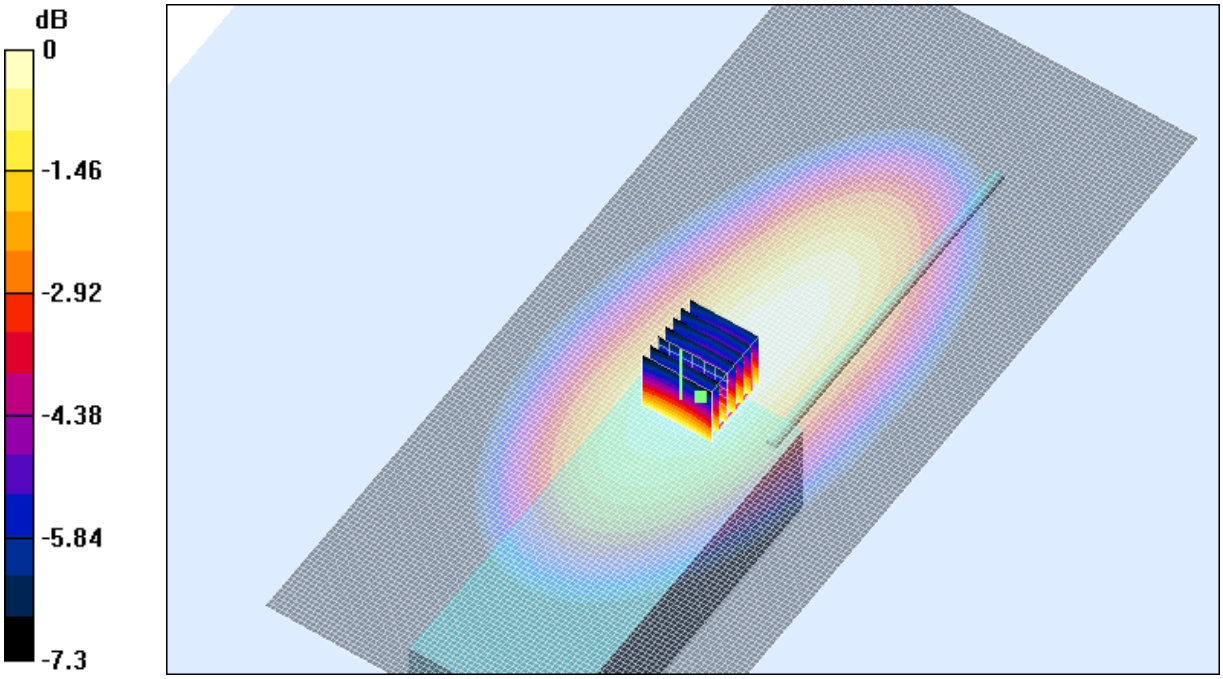

0 dB = 2.76mW/g

SAR MEASUREMENT PLOT 1

Ambient Temperature	**20.0 Degrees Celsius**
Liquid Temperature	**19.4 Degrees Celsius**
Humidity	**41.0 %**

This document shall not be copied or reproduced, except in full without the written permission of the Technical Director , EMC Technologies Pty. Ltd.

www. emctech.com.au

Test Date: 10 August 2004
File Name: 450 MHz Belt Clip (DAE442 Probe1377) Ant Wide Band 10-08-04.da4
DUT: Tait Transceiver Ant. Wide Band; Type: TPAH6A; Serial: 21000002

* Communication System: CW 450 MHz; Frequency: 485 MHz; Duty Cycle: 1:1
* Medium parameters used: σ = 0.92202; mho/m, ε_r = 55.5987; ρ = 1000 kg/m^3
- Electronics: DAE3 Sn442; Probe: ET3DV6 - SN1377; ConvF(7.1, 7.1, 7.1)
- Phantom: Flat Phantom 10.1; Serial: P 10.1; Phantom section: Flat 2.2 Section

Channel 2 Test/Area Scan (81x181x1): Measurement grid: dx=20mm, dy=20mm
Reference Value = 45.4 V/m; Power Drift = -0.2 dB
Maximum value of SAR (interpolated) = 5.11 mW/g

Channel 2 Test/Zoom Scan (7x7x7)/Cube 0: Measurement grid: dx=5mm, dy=5mm, dz=5mm
Reference Value = 45.4 V/m; Power Drift = -0.2 dB
Maximum value of SAR (measured) = 5.09 mW/g
Peak SAR (extrapolated) = 7.46 W/kg
SAR(1 g) = 4.83 mW/g; SAR(10 g) = 3.53 mW/g

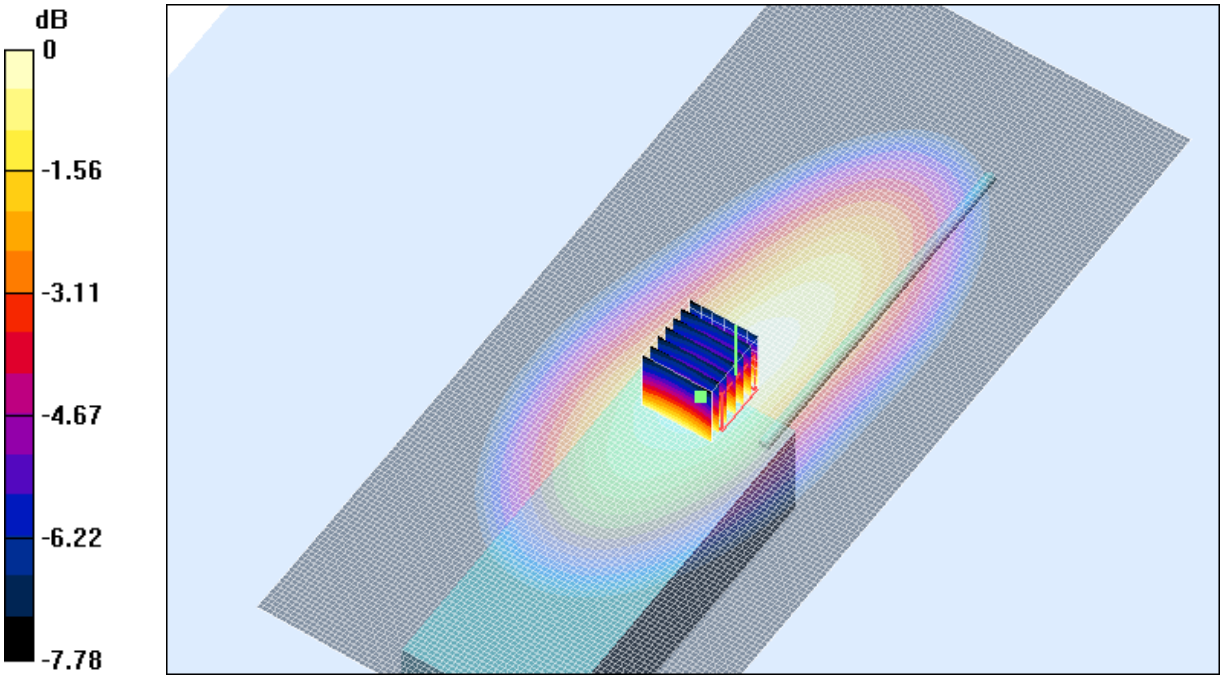

0 dB = 5.09mW/g

SAR MEASUREMENT PLOT 2

Ambient Temperature	**20.0 Degrees Celsius**
Liquid Temperature	**19.4 Degrees Celsius**
Humidity	**41.0 %**

This document shall not be copied or reproduced, except in full without the written permission of the Technical Director , EMC Technologies Pty. Ltd.

www. emctech.com.au

Test Date: 10 August 2004
File Name: 450 MHz Belt Clip (DAE442 Probe1377) Ant Wide Band 10-08-04.da4
DUT: Tait Transceiver Ant. Wide Band; Type: TPAH6A; Serial: 21000002

* Communication System: CW 450 MHz; Frequency: 520 MHz; Duty Cycle: 1:1
* Medium parameters used: σ = 0.95492; mho/m, ε_r = 55.0685; ρ = 1000 kg/m^3
- Electronics: DAE3 Sn442; Probe: ET3DV6 - SN1377; ConvF(7.1, 7.1, 7.1)
- Phantom: Flat Phantom 10.1; Serial: P 10.1; Phantom section: Flat 2.2 Section

Channel 3 Test/Area Scan (81x181x1): Measurement grid: dx=20mm, dy=20mm
Reference Value = 26.9 V/m; Power Drift = -0.3 dB
Maximum value of SAR (interpolated) = 2.13 mW/g

Channel 3 Test/Zoom Scan (7x7x7)/Cube 0: Measurement grid: dx=5mm, dy=5mm, dz=5mm
Reference Value = 26.9 V/m; Power Drift = -0.3 dB
Maximum value of SAR (measured) = 2.09 mW/g
Peak SAR (extrapolated) = 3.16 W/kg
SAR(1 g) = 2 mW/g; SAR(10 g) = 1.43 mW/g

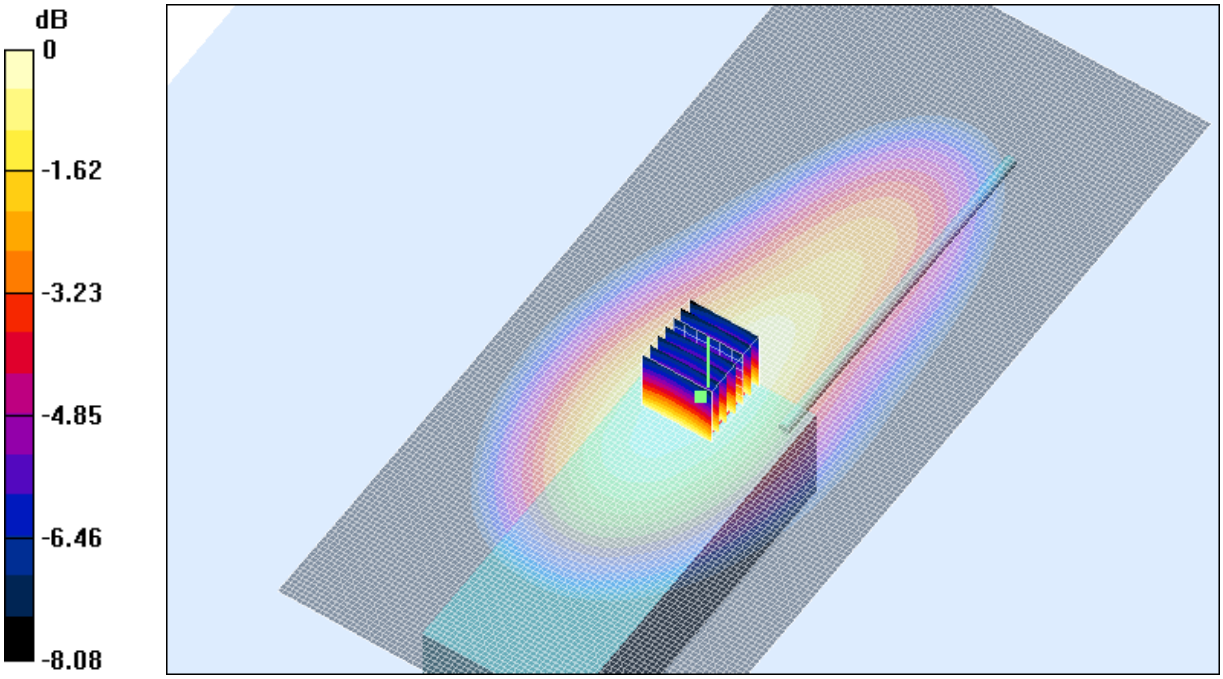

0 dB = 2.09mW/g

SAR MEASUREMENT PLOT 3

Ambient Temperature	**20.0 Degrees Celsius**
Liquid Temperature	**19.4 Degrees Celsius**
Humidity	**41.0 %**

This document shall not be copied or reproduced, except in full without the written permission of the Technical Director , EMC Technologies Pty. Ltd.

www. emctech.com.au

Test Date: 10 August 2004
File Name: 450 MHz Belt Clip (DAE442 Probe1377) Ant 435-470 MHz 10-08-04.da4
DUT: Tait Transceiver Ant. 435-470 MHz; Type: TPAH6A; Serial: 21000002

* Communication System: CW 450 MHz; Frequency: 450 MHz; Duty Cycle: 1:1
* Medium parameters used: σ = 0.895242; mho/m, ε_r = 56.1845; ρ = 1000 kg/m^3
- Electronics: DAE3 Sn442; Probe: ET3DV6 - SN1377; ConvF(7.1, 7.1, 7.1)
- Phantom: Flat Phantom 10.1; Serial: P 10.1; Phantom section: Flat 2.2 Section

Channel 1 Test/Area Scan (81x171x1): Measurement grid: dx=20mm, dy=20mm
Reference Value = 47.4 V/m; Power Drift = -0.3 dB
Maximum value of SAR (interpolated) = 3.53 mW/g

Channel 1 Test/Zoom Scan (7x7x7)/Cube 0: Measurement grid: dx=5mm, dy=5mm, dz=5mm
Reference Value = 47.4 V/m; Power Drift = -0.3 dB
Maximum value of SAR (measured) = 3.68 mW/g
Peak SAR (extrapolated) = 5.44 W/kg
SAR(1 g) = 3.51 mW/g; SAR(10 g) = 2.55 mW/g

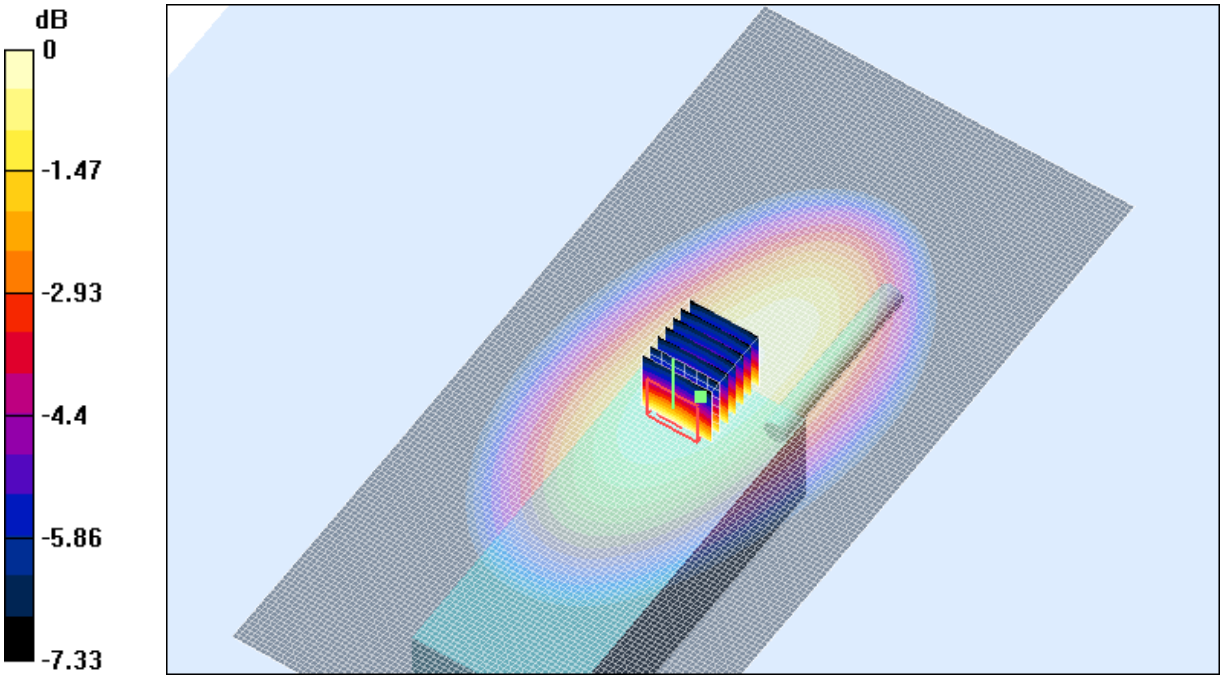

0 dB = 3.68mW/g

SAR MEASUREMENT PLOT 4

Ambient Temperature	**20.0 Degrees Celsius**
Liquid Temperature	**19.4 Degrees Celsius**
Humidity	**41.0 %**

This document shall not be copied or reproduced, except in full without the written permission of the Technical Director , EMC Technologies Pty. Ltd.

www. emctech.com.au

Test Date: 10 August 2004
File Name: 450 MHz Belt Clip (DAE442 Probe1377) Ant 470-520 MHz 10-08-04.da4
DUT: Tait Transceiver Ant. 470-520 MHz; Type: TPAH6A; Serial: 21000002

* Communication System: CW 450 MHz; Frequency: 485 MHz; Duty Cycle: 1:1
* Medium parameters used: σ = 0.92202; mho/m, ε_r = 55.5987; ρ = 1000 kg/m^3
- Electronics: DAE3 Sn442; Probe: ET3DV6 - SN1377; ConvF(7.1, 7.1, 7.1)
- Phantom: Flat Phantom 10.1; Serial: P 10.1; Phantom section: Flat 2.2 Section

Channel 2 Test/Area Scan (81x171x1): Measurement grid: dx=20mm, dy=20mm
Reference Value = 43 V/m; Power Drift = -0.4 dB
Maximum value of SAR (interpolated) = 3.17 mW/g

Channel 2 Test/Zoom Scan (7x7x7)/Cube 0: Measurement grid: dx=5mm, dy=5mm, dz=5mm
Reference Value = 43 V/m; Power Drift = -0.4 dB
Maximum value of SAR (measured) = 3.16 mW/g
Peak SAR (extrapolated) = 4.64 W/kg
SAR(1 g) = 3.01 mW/g; SAR(10 g) = 2.18 mW/g

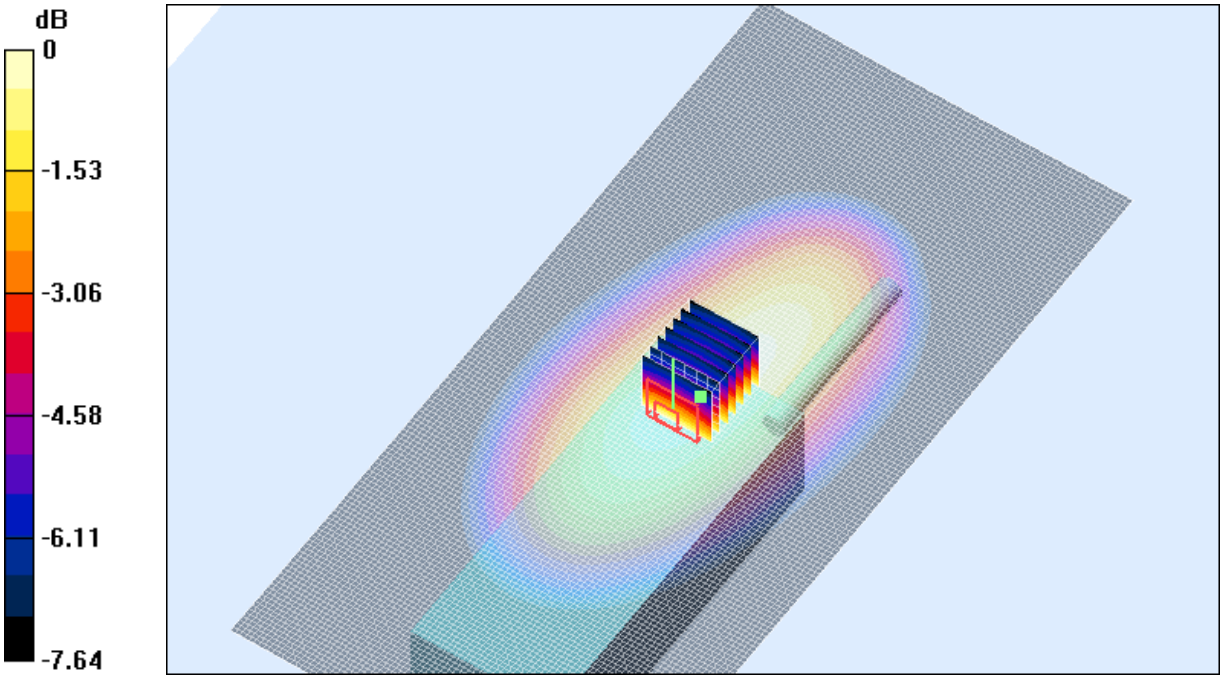

0 dB = 3.16mW/g

SAR MEASUREMENT PLOT 5

Ambient Temperature	**20.0 Degrees Celsius**
Liquid Temperature	**19.4 Degrees Celsius**
Humidity	**41.0 %**

This document shall not be copied or reproduced, except in full without the written permission of the Technical Director , EMC Technologies Pty. Ltd.

www. emctech.com.au

Z-Axis Graph for Plot 1

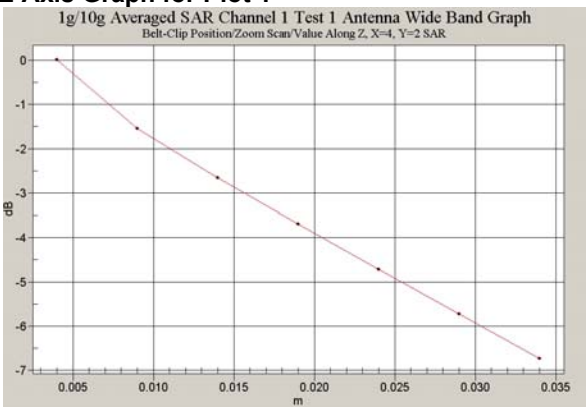

Z-Axis Graph for Plot 2

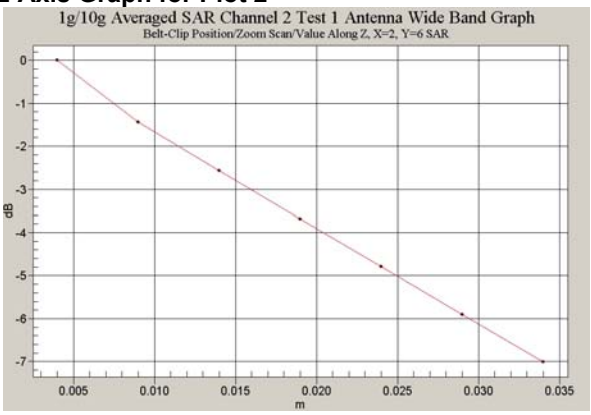

Z-Axis Graph for Plot 3

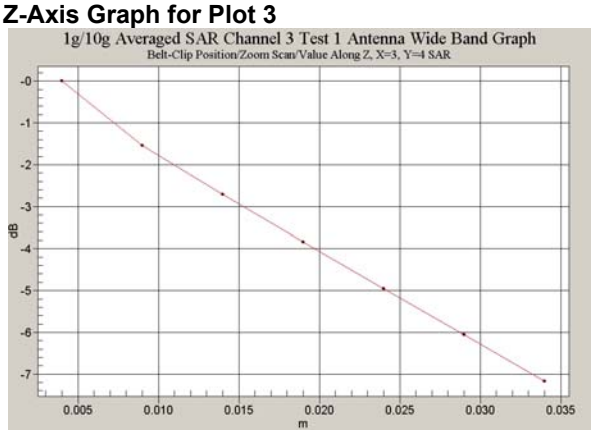

Z-Axis Graph for Plot 4

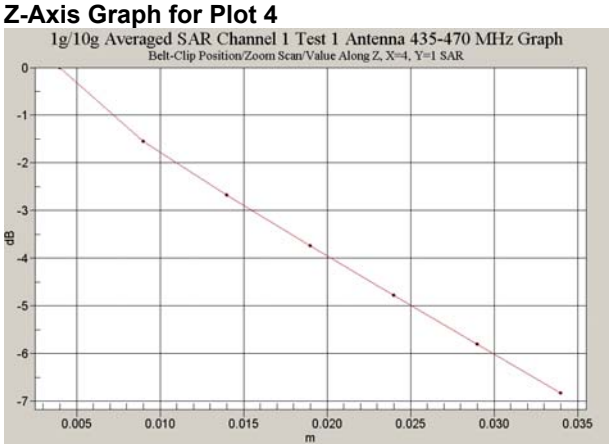

Z-Axis Graph for Plot 5

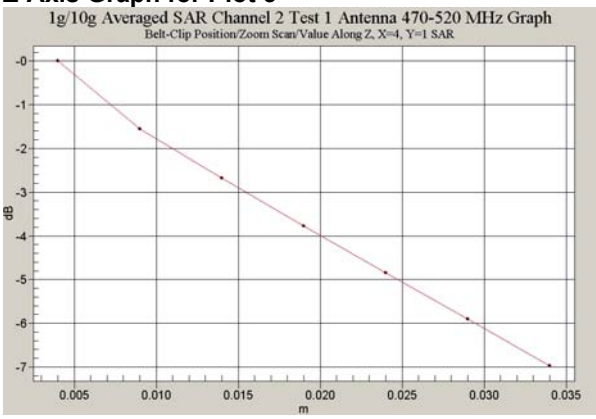

This document shall not be copied or reproduced, except in full without the written permission of the Technical Director , EMC Technologies Pty. Ltd.

Test Date: 10 August 2004
File Name: 450 MHz Pouch Belt Clip (DAE442 Probe1377) Ant Wide Band 10-08-04.da4
DUT: Tait Transceiver Ant. Wide Band; Type: TPAH6A; Serial: 21000002

* Communication System: CW 450 MHz; Frequency: 450 MHz; Duty Cycle: 1:1
* Medium parameters used: σ = 0.895242; mho/m, ε_r = 56.1845; ρ = 1000 kg/m^3
- Electronics: DAE3 Sn442; Probe: ET3DV6 - SN1377; ConvF(7.1, 7.1, 7.1)
- Phantom: Flat Phantom 10.1; Serial: P 10.1; Phantom section: Flat 2.2 Section

Channel 1 Test/Area Scan (81x181x1): Measurement grid: dx=20mm, dy=20mm
Reference Value = 20 V/m; Power Drift = -0.1 dB
Maximum value of SAR (interpolated) = 1.52 mW/g

Channel 1 Test/Zoom Scan (7x7x7)/Cube 0: Measurement grid: dx=5mm, dy=5mm, dz=5mm
Reference Value = 20 V/m; Power Drift = -0.1 dB
Maximum value of SAR (measured) = 1.54 mW/g
Peak SAR (extrapolated) = 2.17 W/kg
SAR(1 g) = 1.48 mW/g; SAR(10 g) = 1.11 mW/g

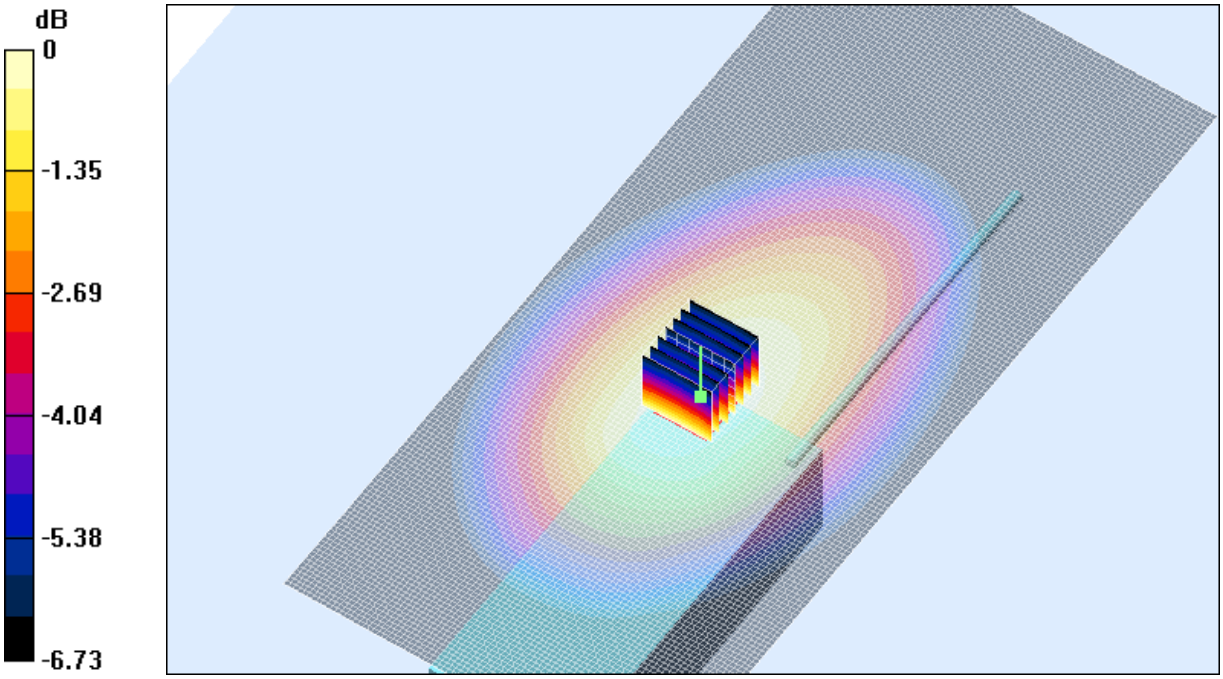

0 dB = 1.54mW/g

SAR MEASUREMENT PLOT 6

Ambient Temperature	**20.0 Degrees Celsius**
Liquid Temperature	**19.4 Degrees Celsius**
Humidity	**41.0 %**

This document shall not be copied or reproduced, except in full without the written permission of the Technical Director , EMC Technologies Pty. Ltd.

www. emctech.com.au

Test Date: 11 August 2004
File Name: 450 MHz Pouch Belt Clip (DAE442 Probe1377) Ant Wide Band 11-08-04.da4
DUT: Tait Transceiver Ant. Wide Band; Type: TPAH6A; Serial: 21000002

* Communication System: CW 450 MHz; Frequency: 485 MHz; Duty Cycle: 1:1
* Medium parameters used: σ = 0.919209; mho/m, ε_r = 55.3356; ρ = 1000 kg/m^3
- Electronics: DAE3 Sn442; Probe: ET3DV6 - SN1377; ConvF(7.1, 7.1, 7.1)
- Phantom: Flat Phantom 10.1; Serial: P 10.1; Phantom section: Flat 2.2 Section

Channel 2 Test/Area Scan (81x181x1): Measurement grid: dx=20mm, dy=20mm
Reference Value = 24.7 V/m; Power Drift = -0.2 dB
Maximum value of SAR (interpolated) = 1.72 mW/g

Channel 2 Test/Zoom Scan (7x7x7)/Cube 0: Measurement grid: dx=5mm, dy=5mm, dz=5mm
Reference Value = 24.7 V/m; Power Drift = -0.2 dB
Maximum value of SAR (measured) = 1.7 mW/g
Peak SAR (extrapolated) = 2.41 W/kg
SAR(1 g) = 1.64 mW/g; SAR(10 g) = 1.22 mW/g

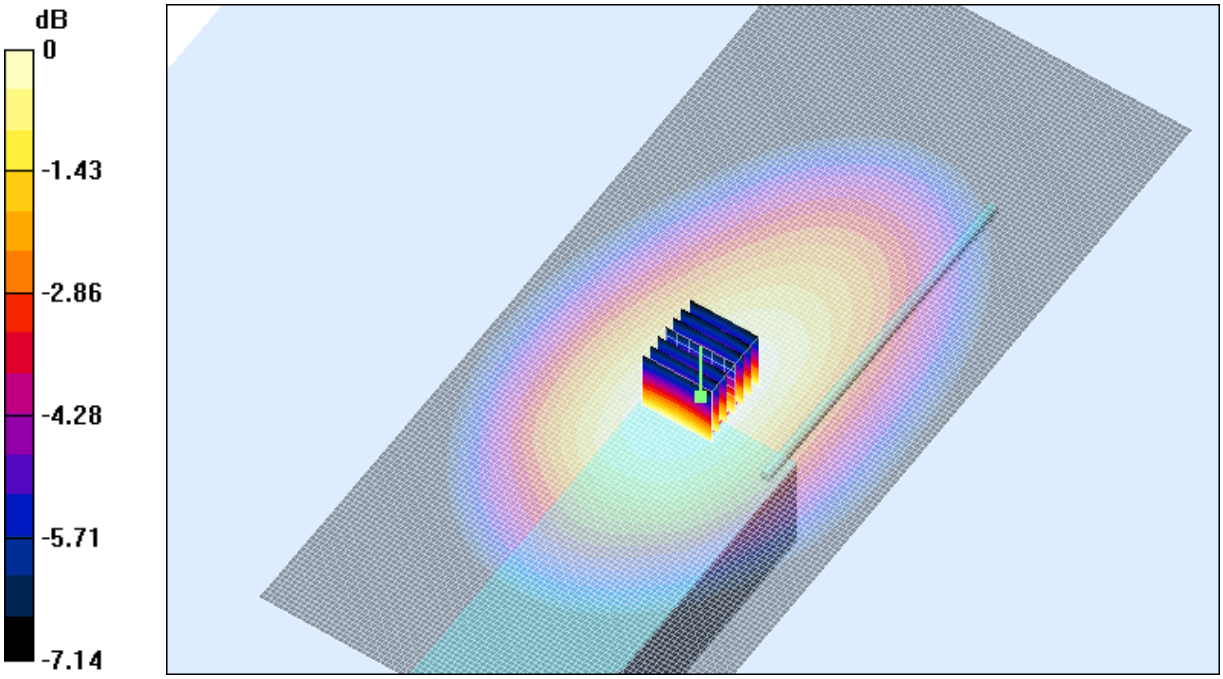

0 dB = 1.7mW/g

SAR MEASUREMENT PLOT 7

Ambient Temperature	**20.3 Degrees Celsius**
Liquid Temperature	**19.7 Degrees Celsius**
Humidity	**42.0 %**

This document shall not be copied or reproduced, except in full without the written permission of the Technical Director , EMC Technologies Pty. Ltd.

www. emctech.com.au

Test Date: 11 August 2004
File Name: 450 MHz Pouch Belt Clip (DAE442 Probe1377) Ant Wide Band 11-08-04.da4
DUT: Tait Transceiver Ant. Wide Band; Type: TPAH6A; Serial: 21000002

* Communication System: CW 450 MHz; Frequency: 520 MHz; Duty Cycle: 1:1
* Medium parameters used: σ = 0.952143; mho/m, ε_r = 54.7537; ρ = 1000 kg/m^3
- Electronics: DAE3 Sn442; Probe: ET3DV6 - SN1377; ConvF(7.1, 7.1, 7.1)
- Phantom: Flat Phantom 10.1; Serial: P 10.1; Phantom section: Flat 2.2 Section

Channel 3 Test/Area Scan (81x181x1): Measurement grid: dx=20mm, dy=20mm
Reference Value = 12.7 V/m; Power Drift = -0.4 dB
Maximum value of SAR (interpolated) = 0.952 mW/g

Channel 3 Test/Zoom Scan (7x7x7)/Cube 0: Measurement grid: dx=5mm, dy=5mm, dz=5mm
Reference Value = 12.7 V/m; Power Drift = -0.4 dB
Maximum value of SAR (measured) = 0.943 mW/g
Peak SAR (extrapolated) = 1.34 W/kg
SAR(1 g) = 0.907 mW/g; SAR(10 g) = 0.671 mW/g

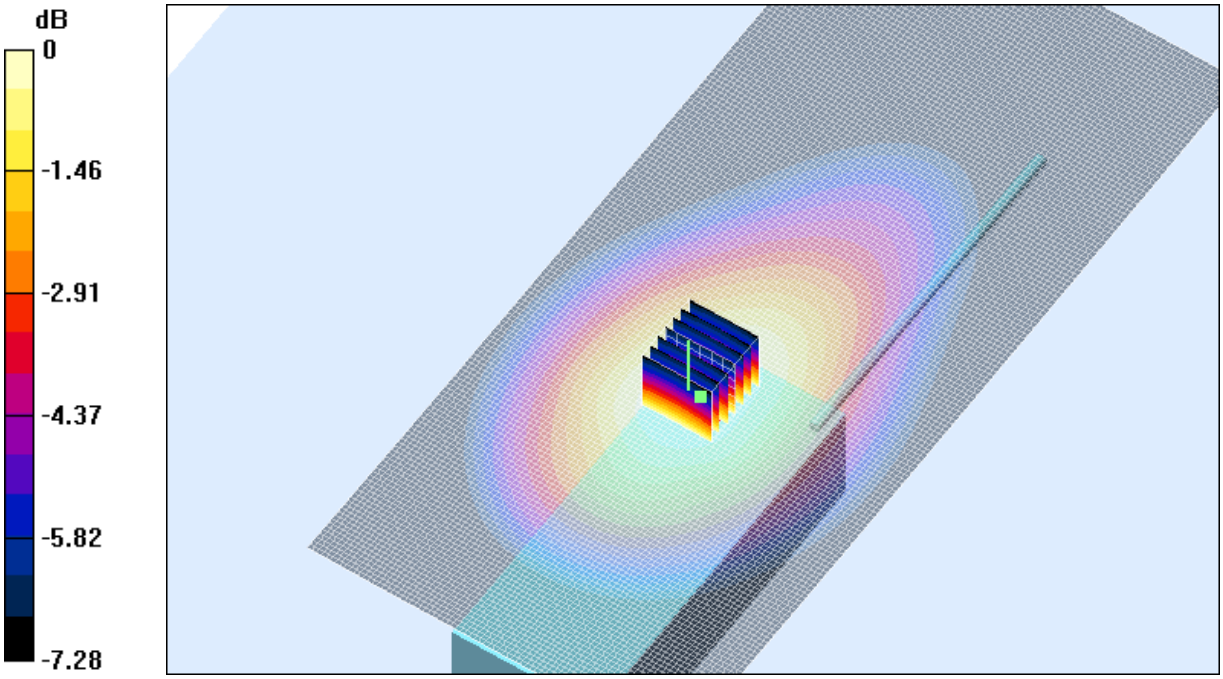

0 dB = 0.943mW/g

SAR MEASUREMENT PLOT 8

Ambient Temperature	**20.3 Degrees Celsius**
Liquid Temperature	**19.7 Degrees Celsius**
Humidity	**42.0 %**

This document shall not be copied or reproduced, except in full without the written permission of the Technical Director , EMC Technologies Pty. Ltd.

www. emctech.com.au

Test Date: 11 August 2004
File Name: 450 MHz Pouch Belt Clip (DAE442 Probe1377) Ant 435-470 MHz 11-08-04.da4
DUT: Tait Transceiver Ant. 435-470 MHz; Type: TPAH6A; Serial: 21000002

* Communication System: CW 450 MHz; Frequency: 450 MHz; Duty Cycle: 1:1
* Medium parameters used: σ = 0.892631; mho/m, ε_r = 55.9446; ρ = 1000 kg/m^3
- Electronics: DAE3 Sn442; Probe: ET3DV6 - SN1377; ConvF(7.1, 7.1, 7.1)
- Phantom: Flat Phantom 10.1; Serial: P 10.1; Phantom section: Flat 2.2 Section

Channel 1 Test/Area Scan (81x171x1): Measurement grid: dx=20mm, dy=20mm
Reference Value = 25.9 V/m; Power Drift = -0.4 dB
Maximum value of SAR (interpolated) = 1.55 mW/g

Channel 1 Test/Zoom Scan (7x7x7)/Cube 0: Measurement grid: dx=5mm, dy=5mm, dz=5mm
Reference Value = 25.9 V/m; Power Drift = -0.4 dB
Maximum value of SAR (measured) = 1.5 mW/g
Peak SAR (extrapolated) = 2.12 W/kg
SAR(1 g) = 1.45 mW/g; SAR(10 g) = 1.09 mW/g

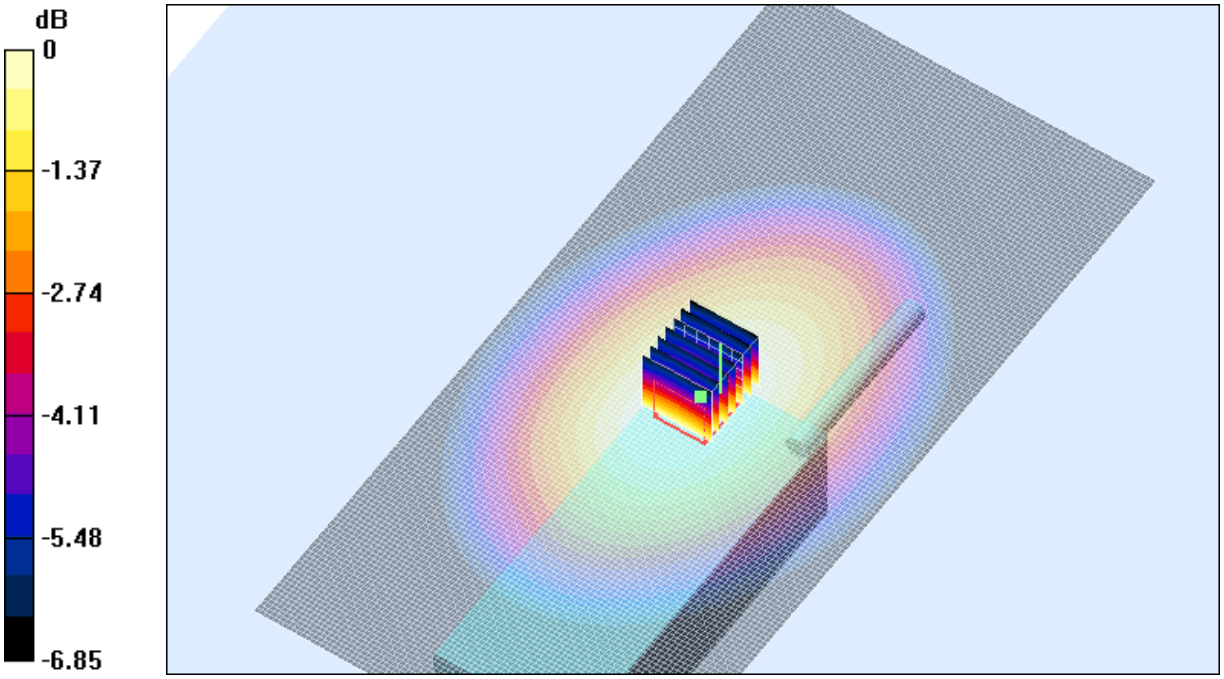

0 dB = 1.5mW/g

SAR MEASUREMENT PLOT 9

Ambient Temperature	**20.3 Degrees Celsius**
Liquid Temperature	**19.7 Degrees Celsius**
Humidity	**42.0 %**

This document shall not be copied or reproduced, except in full without the written permission of the Technical Director , EMC Technologies Pty. Ltd.

www. emctech.com.au

Test Date: 11 August 2004
File Name: 450 MHz Pouch Belt Clip (DAE442 Probe1377) Ant 470-520 MHz 11-08-04.da4
DUT: Tait Transceiver Ant. 470-520 MHz; Type: TPAH6A; Serial: 21000002

* Communication System: CW 450 MHz; Frequency: 485 MHz; Duty Cycle: 1:1
* Medium parameters used: σ = 0.919209; mho/m, ε_r = 55.3356; ρ = 1000 kg/m^3
- Electronics: DAE3 Sn442; Probe: ET3DV6 - SN1377; ConvF(7.1, 7.1, 7.1)
- Phantom: Flat Phantom 10.1; Serial: P 10.1; Phantom section: Flat 2.2 Section

Channel 2 Test/Area Scan (81x171x1): Measurement grid: dx=20mm, dy=20mm
Reference Value = 22.3 V/m; Power Drift = -0.3 dB
Maximum value of SAR (interpolated) = 1.16 mW/g

Channel 2 Test/Zoom Scan (7x7x7)/Cube 0: Measurement grid: dx=5mm, dy=5mm, dz=5mm
Reference Value = 22.3 V/m; Power Drift = -0.3 dB
Maximum value of SAR (measured) = 1.13 mW/g
Peak SAR (extrapolated) = 1.58 W/kg
SAR(1 g) = 1.09 mW/g; SAR(10 g) = 0.817 mW/g

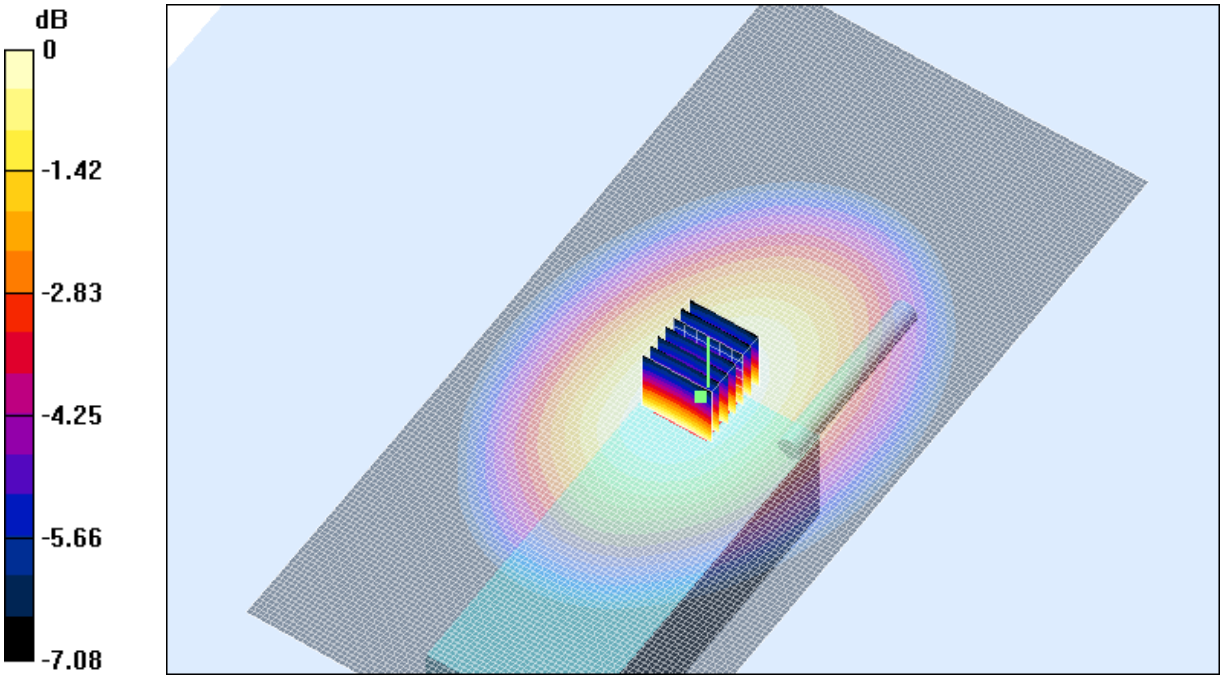

0 dB = 1.13mW/g

SAR MEASUREMENT PLOT 10

Ambient Temperature	**20.3 Degrees Celsius**
Liquid Temperature	**19.7 Degrees Celsius**
Humidity	**42.0 %**

This document shall not be copied or reproduced, except in full without the written permission of the Technical Director , EMC Technologies Pty. Ltd.

www. emctech.com.au

Z-Axis Graph for Plot 6

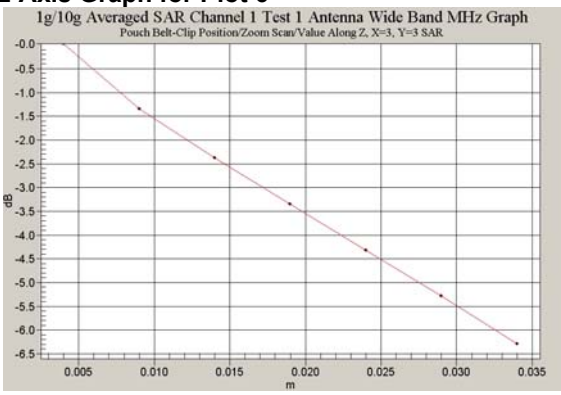

Z-Axis Graph for Plot 7

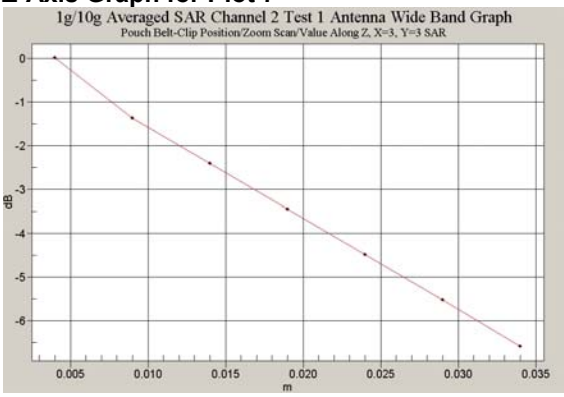

Z-Axis Graph for Plot 8

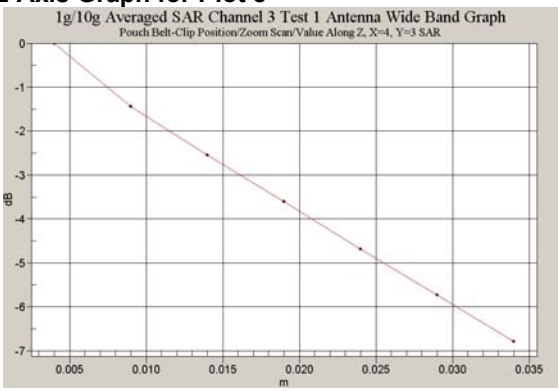

Z-Axis Graph for Plot 9

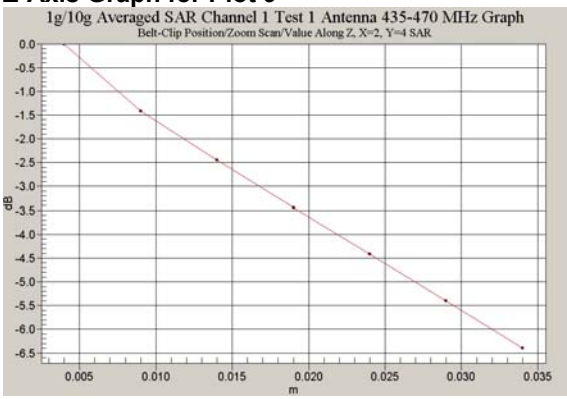

Z-Axis Graph for Plot 10

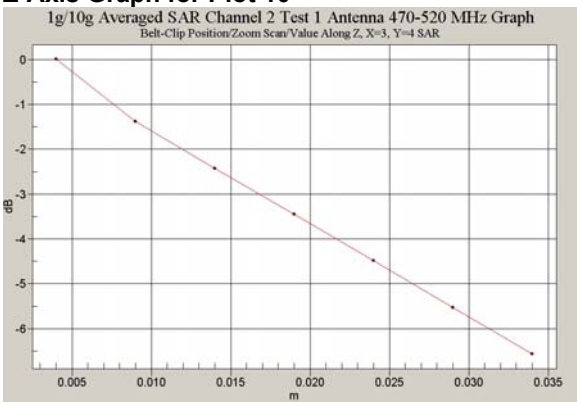

This document shall not be copied or reproduced, except in full without the written permission of the Technical Director , EMC Technologies Pty. Ltd.

www. emctech.com.au

Test Date: 11 August 2004
File Name: 450 MHz Belt Clip SPK-MIC (DAE442 Probe1377) Ant Wide Band 11-08-04.da4
DUT: Tait SPK-MIC Ant. Wide Band; Type: TPA-AA-204; Serial: Prototype

* Communication System: CW 450 MHz; Frequency: 450 MHz; Duty Cycle: 1:1
* Medium parameters used: σ = 0.892631; mho/m, ε_r = 55.9446; ρ = 1000 kg/m^3
- Electronics: DAE3 Sn442; Probe: ET3DV6 - SN1377; ConvF(7.1, 7.1, 7.1)
- Phantom: Flat Phantom 10.1; Serial: P 10.1; Phantom section: Flat 2.2 Section

Channel 1 Test/Area Scan (81x171x1): Measurement grid: dx=20mm, dy=20mm
Reference Value = 20.7 V/m; Power Drift = -0.3 dB
Maximum value of SAR (interpolated) = 4.53 mW/g

Channel 1 Test/Zoom Scan (7x7x7)/Cube 0: Measurement grid: dx=5mm, dy=5mm, dz=5mm
Reference Value = 20.7 V/m; Power Drift = -0.3 dB
Maximum value of SAR (measured) = 4.37 mW/g
Peak SAR (extrapolated) = 8.02 W/kg
SAR(1 g) = 4.13 mW/g; SAR(10 g) = 2.73 mW/g

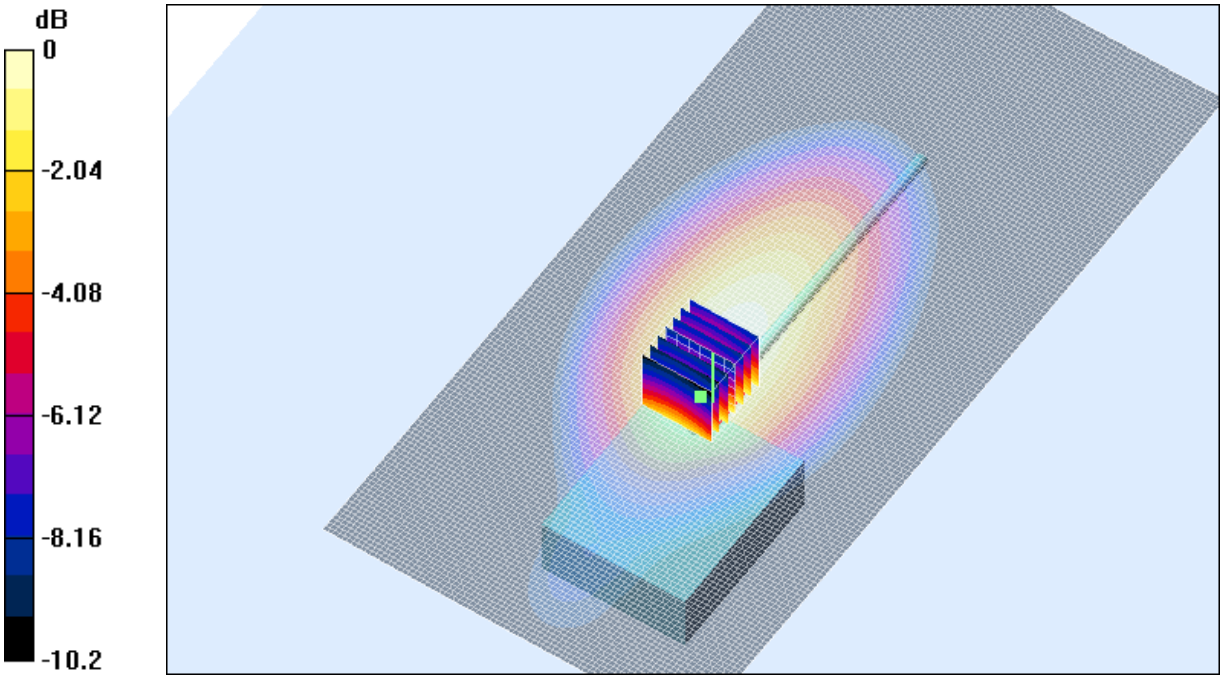

0 dB = 4.37mW/g

SAR MEASUREMENT PLOT 11

Ambient Temperature	**20.3 Degrees Celsius**
Liquid Temperature	**19.7 Degrees Celsius**
Humidity	**42.0 %**

This document shall not be copied or reproduced, except in full without the written permission of the Technical Director , EMC Technologies Pty. Ltd.

Test Date: 11 August 2004
File Name: 450 MHz Belt Clip SPK-MIC (DAE442 Probe1377) Ant Wide Band 11-08-04.da4
DUT: Tait SPK-MIC Ant. Wide Band; Type: TPA-AA-204; Serial: Prototype

* Communication System: CW 450 MHz; Frequency: 485 MHz; Duty Cycle: 1:1
* Medium parameters used: σ = 0.919209; mho/m, ε_r = 55.3356; ρ = 1000 kg/m^3
- Electronics: DAE3 Sn442; Probe: ET3DV6 - SN1377; ConvF(7.1, 7.1, 7.1)
- Phantom: Flat Phantom 10.1; Serial: P 10.1; Phantom section: Flat 2.2 Section

Channel 2 Test/Area Scan (81x171x1): Measurement grid: dx=20mm, dy=20mm
Reference Value = 31.3 V/m; Power Drift = -0.2 dB
Maximum value of SAR (interpolated) = 8.81 mW/g

Channel 2 Test/Zoom Scan (7x7x7)/Cube 0: Measurement grid: dx=5mm, dy=5mm, dz=5mm
Reference Value = 31.3 V/m; Power Drift = -0.2 dB
Maximum value of SAR (measured) = 8.14 mW/g
Peak SAR (extrapolated) = 15.6 W/kg
SAR(1 g) = 7.74 mW/g; SAR(10 g) = 5.26 mW/g

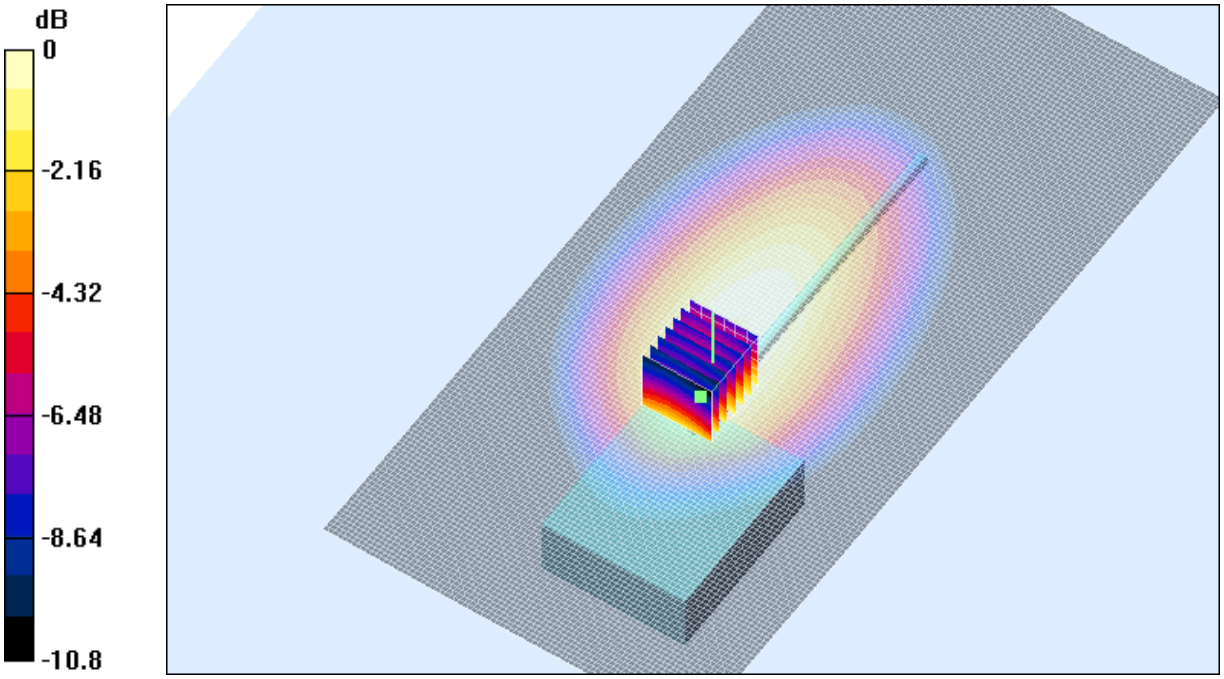

0 dB = 8.14mW/g

SAR MEASUREMENT PLOT 12

Ambient Temperature	**20.3 Degrees Celsius**
Liquid Temperature	**19.7 Degrees Celsius**
Humidity	**42.0 %**

This document shall not be copied or reproduced, except in full without the written permission of the Technical Director , EMC Technologies Pty. Ltd.

www. emctech.com.au

Test Date: 11 August 2004
File Name: 450 MHz Belt Clip SPK-MIC (DAE442 Probe1377) Ant Wide Band 11-08-04.da4
DUT: Tait SPK-MIC Ant. Wide Band; Type: TPA-AA-204; Serial: Prototype

* Communication System: CW 450 MHz; Frequency: 520 MHz; Duty Cycle: 1:1
* Medium parameters used: σ = 0.952143; mho/m, ε_r = 54.7537; ρ = 1000 kg/m^3
- Electronics: DAE3 Sn442; Probe: ET3DV6 - SN1377; ConvF(7.1, 7.1, 7.1)
- Phantom: Flat Phantom 10.1; Serial: P 10.1; Phantom section: Flat 2.2 Section

Channel 3 Test/Area Scan (81x171x1): Measurement grid: dx=20mm, dy=20mm
Reference Value = 30.7 V/m; Power Drift = -0.4 dB
Maximum value of SAR (interpolated) = 8.53 mW/g

Channel 3 Test/Zoom Scan (7x7x7)/Cube 0: Measurement grid: dx=5mm, dy=5mm, dz=5mm
Reference Value = 30.7 V/m; Power Drift = -0.4 dB
Maximum value of SAR (measured) = 8.46 mW/g
Peak SAR (extrapolated) = 12.5 W/kg
SAR(1 g) = 8.05 mW/g; SAR(10 g) = 5.66 mW/g

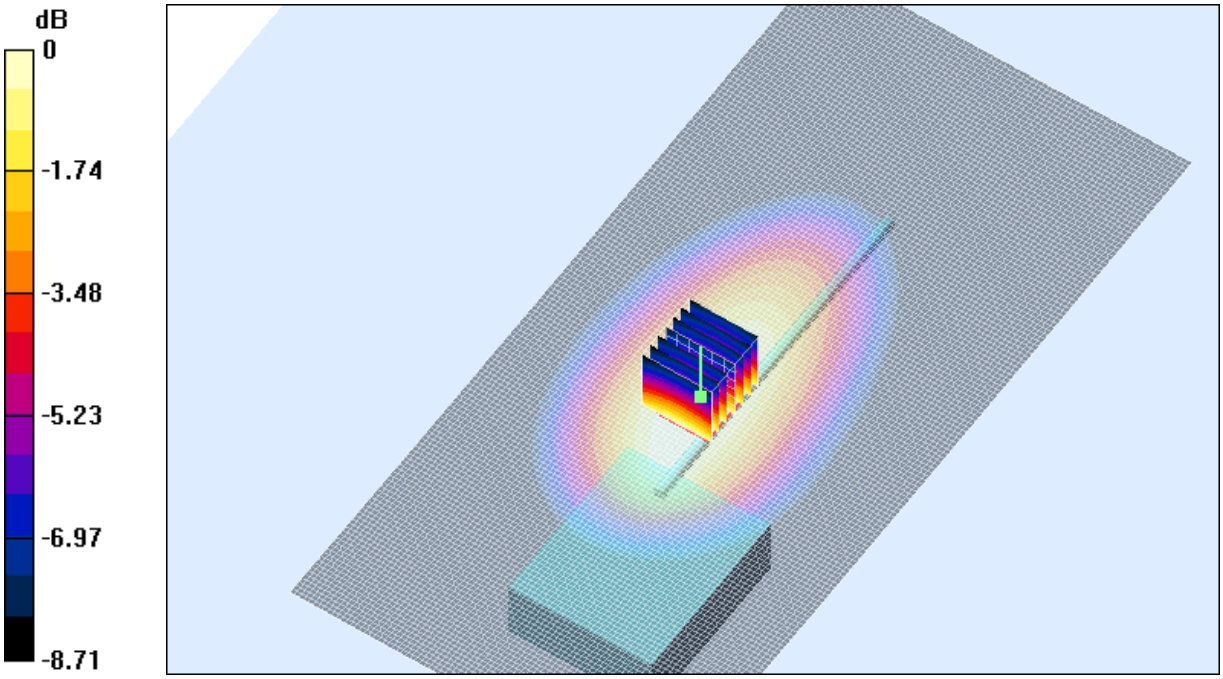

0 dB = 8.46mW/g

SAR MEASUREMENT PLOT 13

Ambient Temperature	**20.3 Degrees Celsius**
Liquid Temperature	**19.7 Degrees Celsius**
Humidity	**42.0 %**

This document shall not be copied or reproduced, except in full without the written permission of the Technical Director , EMC Technologies Pty. Ltd.

www. emctech.com.au

Test Date: 11 August 2004
File Name: 450 MHz Belt Clip SPK-MIC (DAE442 Probe1377) Ant 435-470 MHz 11-08-04.da4
DUT: Tait SPK-MIC Ant. 435-470 MHz; Type: TPA-AA-204; Serial: Prototype

* Communication System: CW 450 MHz; Frequency: 450 MHz; Duty Cycle: 1:1
* Medium parameters used: σ = 0.892631; mho/m, ε_r = 55.9446; ρ = 1000 kg/m^3
- Electronics: DAE3 Sn442; Probe: ET3DV6 - SN1377; ConvF(7.1, 7.1, 7.1)
- Phantom: Flat Phantom 10.1; Serial: P 10.1; Phantom section: Flat 2.2 Section

Channel 1 Test/Area Scan (81x131x1): Measurement grid: dx=20mm, dy=20mm
Reference Value = 57.4 V/m; Power Drift = -0.0 dB
Maximum value of SAR (interpolated) = 6.66 mW/g

Channel 1 Test/Zoom Scan (7x7x7)/Cube 0: Measurement grid: dx=5mm, dy=5mm, dz=5mm
Reference Value = 57.4 V/m; Power Drift = -0.0 dB
Maximum value of SAR (measured) = 6.26 mW/g
Peak SAR (extrapolated) = 10.8 W/kg
SAR(1 g) = 5.91 mW/g; SAR(10 g) = 4.13 mW/g

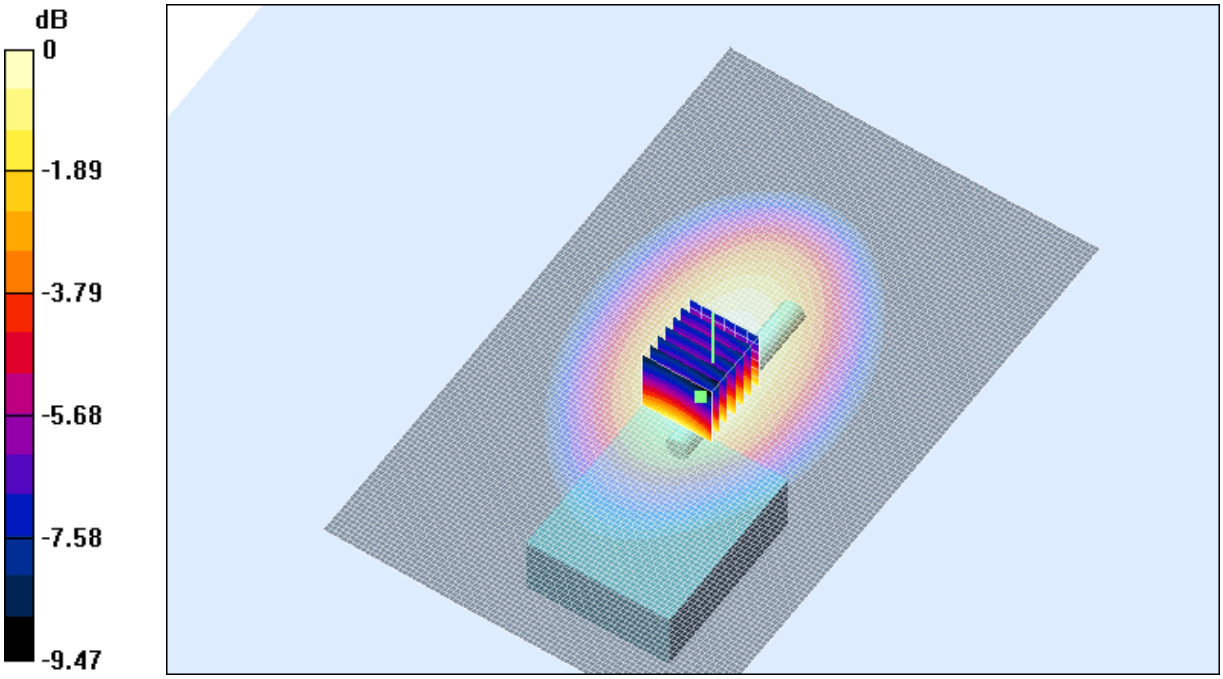

0 dB = 6.26mW/g

SAR MEASUREMENT PLOT 14

Ambient Temperature	**20.3 Degrees Celsius**
Liquid Temperature	**19.7 Degrees Celsius**
Humidity	**42.0 %**

This document shall not be copied or reproduced, except in full without the written permission of the Technical Director , EMC Technologies Pty. Ltd.

www. emctech.com.au

Test Date: 11 August 2004
File Name: 450 MHz Belt Clip SPK-MIC (DAE442 Probe1377) Ant 470-520 MHz 11-08-04.da4
DUT: Tait SPK-MIC Ant. 470-520 MHz; Type: TPA-AA-204; Serial: Prototype

* Communication System: CW 450 MHz; Frequency: 485 MHz; Duty Cycle: 1:1
* Medium parameters used: σ = 0.919209; mho/m, ε_r = 55.3356; ρ = 1000 kg/m^3
- Electronics: DAE3 Sn442; Probe: ET3DV6 - SN1377; ConvF(7.1, 7.1, 7.1)
- Phantom: Flat Phantom 10.1; Serial: P 10.1; Phantom section: Flat 2.2 Section

Channel 2 Test 2/Area Scan (81x131x1): Measurement grid: dx=20mm, dy=20mm
Reference Value = 53.6 V/m; Power Drift = -0.3 dB
Maximum value of SAR (interpolated) = 5.29 mW/g

Channel 2 Test 2/Zoom Scan (7x7x7)/Cube 0: Measurement grid: dx=5mm, dy=5mm, dz=5mm
Reference Value = 53.6 V/m; Power Drift = -0.3 dB
Maximum value of SAR (measured) = 4.85 mW/g
Peak SAR (extrapolated) = 8.72 W/kg
SAR(1 g) = 4.61 mW/g; SAR(10 g) = 3.18 mW/g

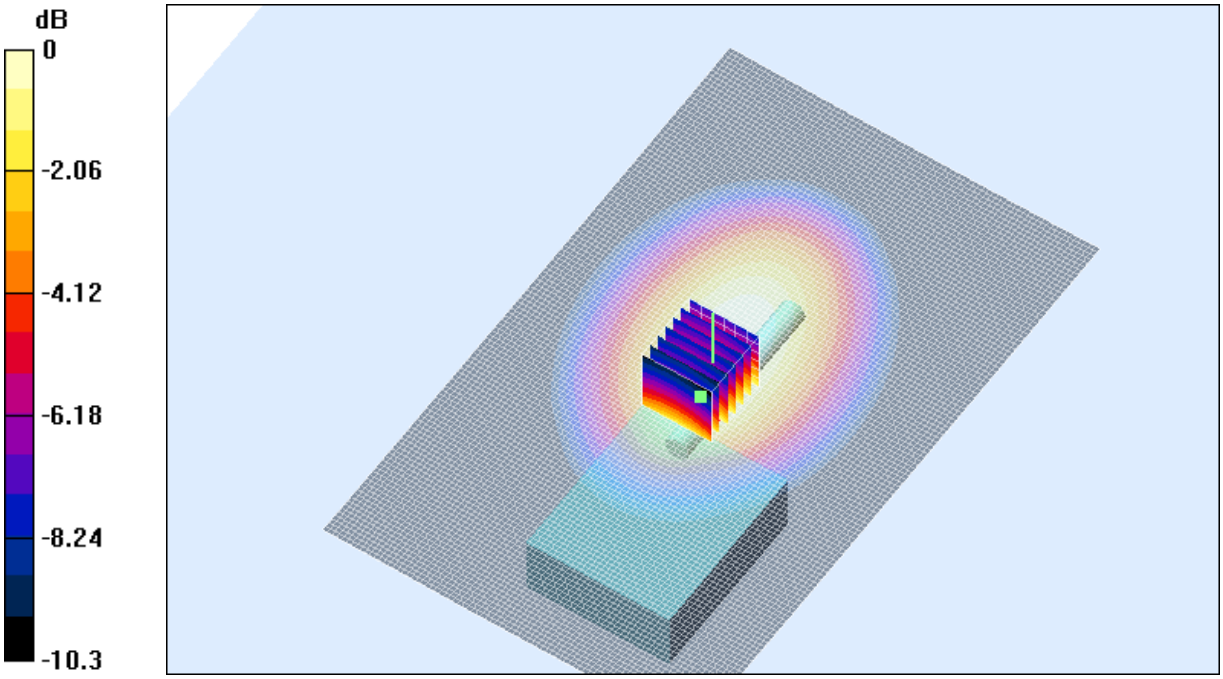

0 dB = 4.85mW/g

SAR MEASUREMENT PLOT 15

Ambient Temperature	**20.3 Degrees Celsius**
Liquid Temperature	**19.7 Degrees Celsius**
Humidity	**42.0 %**

This document shall not be copied or reproduced, except in full without the written permission of the Technical Director , EMC Technologies Pty. Ltd.

www. emctech.com.au