Z-Axis Graph for Plot 11

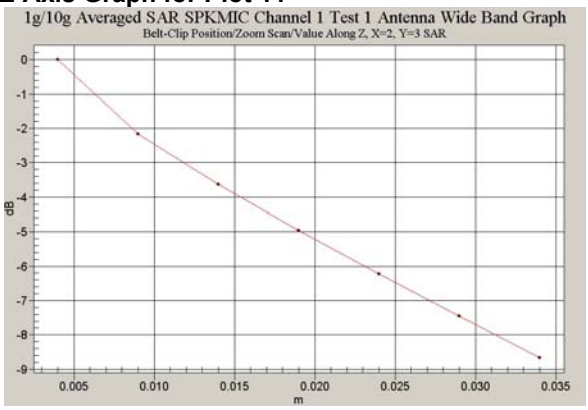

Z-Axis Graph for Plot 12

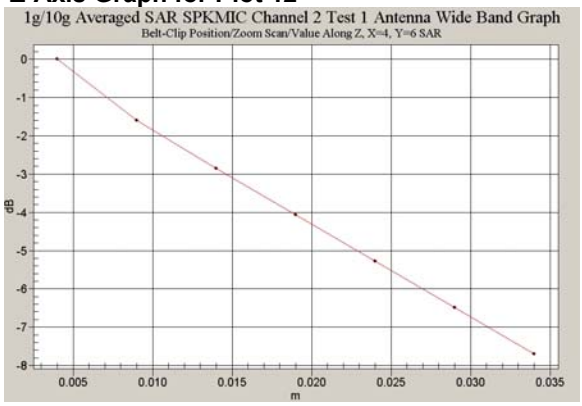

Z-Axis Graph for Plot 13

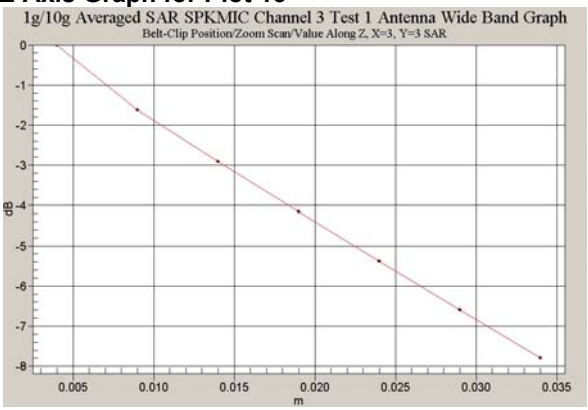

Z-Axis Graph for Plot 14

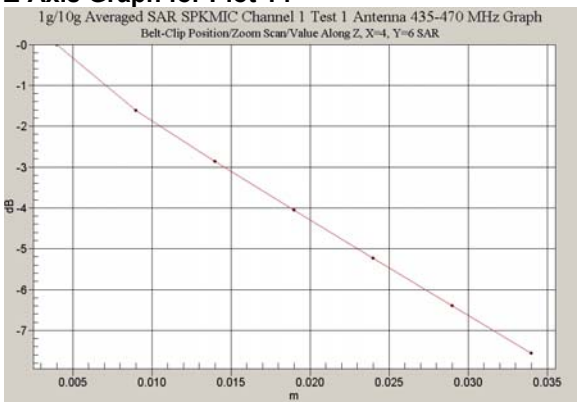

Z-Axis Graph for Plot 15

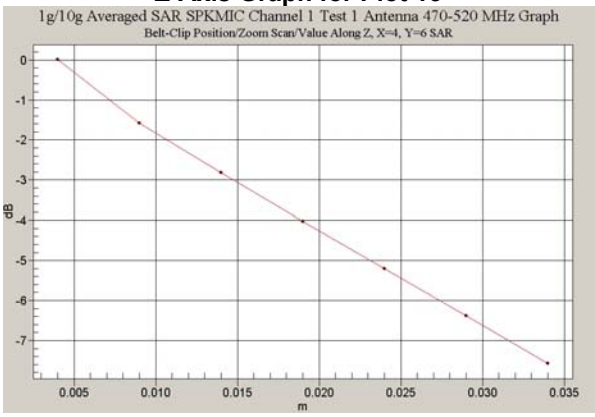

This document shall not be copied or reproduced, except in full without the written permission of the Technical Director , EMC Technologies Pty. Ltd.

Test Date: 12 August 2004
File Name: 450 MHz Face Frontal (DAE442 Probe1377) Ant Wide Band 12-08-04.da4
DUT: Tait Transceiver Ant. Wide Band; Type: TPAH6A; Serial: 21000002

* Communication System: CW 450 MHz; Frequency: 450 MHz; Duty Cycle: 1:1
* Medium parameters used: σ = 0.847109; mho/m, ε_r = 43.2156; ρ = 1000 kg/m^3
- Electronics: DAE3 Sn442; Probe: ET3DV6 - SN1377; ConvF(7, 7, 7)
- Phantom: Flat Phantom 10.1; Serial: P 10.1; Phantom section: Flat 2.2 Section

Channel 1 Test/Area Scan (81x181x1): Measurement grid: dx=20mm, dy=20mm
Reference Value = 42.9 V/m; Power Drift = -0.1 dB
Maximum value of SAR (interpolated) = 4.83 mW/g

Channel 1 Test/Zoom Scan (7x7x7)/Cube 0: Measurement grid: dx=5mm, dy=5mm, dz=5mm
Reference Value = 42.9 V/m; Power Drift = -0.1 dB
Maximum value of SAR (measured) = 4.72 mW/g
Peak SAR (extrapolated) = 6.85 W/kg
SAR(1 g) = 4.52 mW/g; SAR(10 g) = 3.3 mW/g

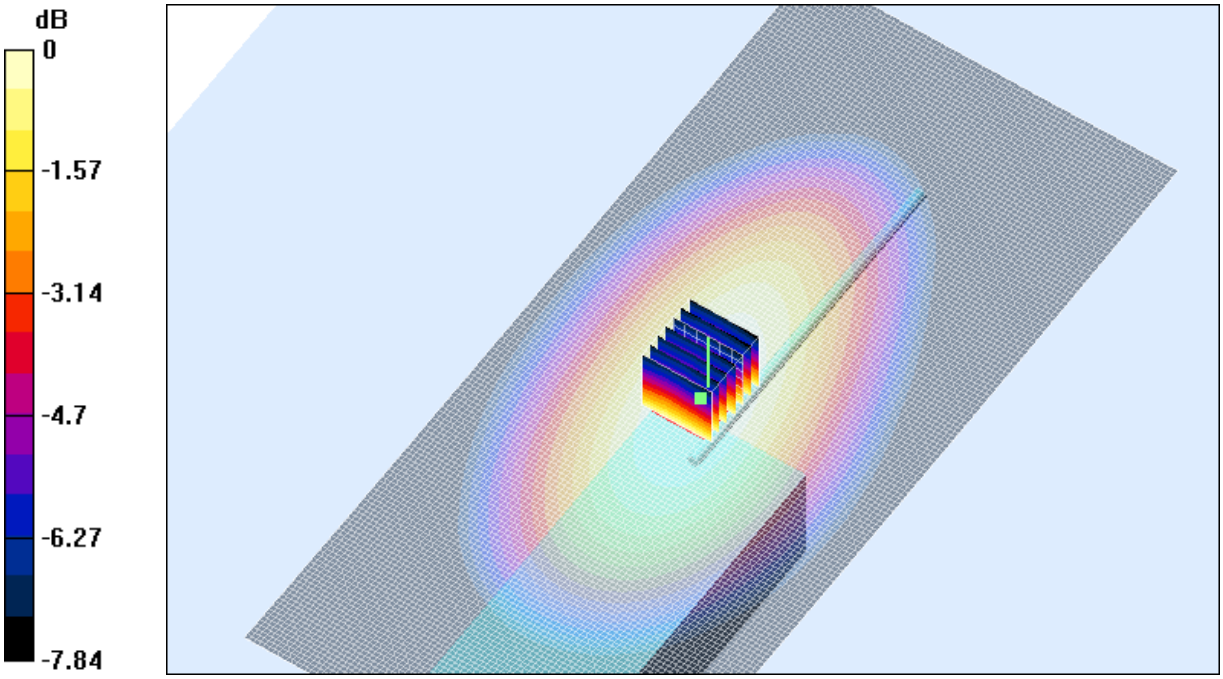

0 dB = 4.72mW/g

SAR MEASUREMENT PLOT 16

Ambient Temperature	**20.5 Degrees Celsius**
Liquid Temperature	**20.0 Degrees Celsius**
Humidity	**41.0 %**

This document shall not be copied or reproduced, except in full without the written permission of the Technical Director , EMC Technologies Pty. Ltd.

www. emctech.com.au

Test Date: 12 August 2004
File Name: 450 MHz Face Frontal (DAE442 Probe1377) Ant Wide Band 12-08-04.da4
DUT: Tait Transceiver Ant. Wide Band; Type: TPAH6A; Serial: 21000002

* Communication System: CW 450 MHz; Frequency: 485 MHz; Duty Cycle: 1:1
* Medium parameters used: σ = 0.874892; mho/m, ε_r = 42.708; ρ = 1000 kg/m^3
- Electronics: DAE3 Sn442; Probe: ET3DV6 - SN1377; ConvF(7, 7, 7)
- Phantom: Flat Phantom 10.1; Serial: P 10.1; Phantom section: Flat 2.2 Section

Channel 2 Test/Area Scan (81x181x1): Measurement grid: dx=20mm, dy=20mm
Reference Value = 41.5 V/m; Power Drift = -0.2 dB
Maximum value of SAR (interpolated) = 4.79 mW/g

Channel 2 Test/Zoom Scan (7x7x7)/Cube 0: Measurement grid: dx=5mm, dy=5mm, dz=5mm
Reference Value = 41.5 V/m; Power Drift = -0.2 dB
Maximum value of SAR (measured) = 4.93 mW/g
Peak SAR (extrapolated) = 7.05 W/kg
SAR(1 g) = 4.74 mW/g; SAR(10 g) = 3.47 mW/g

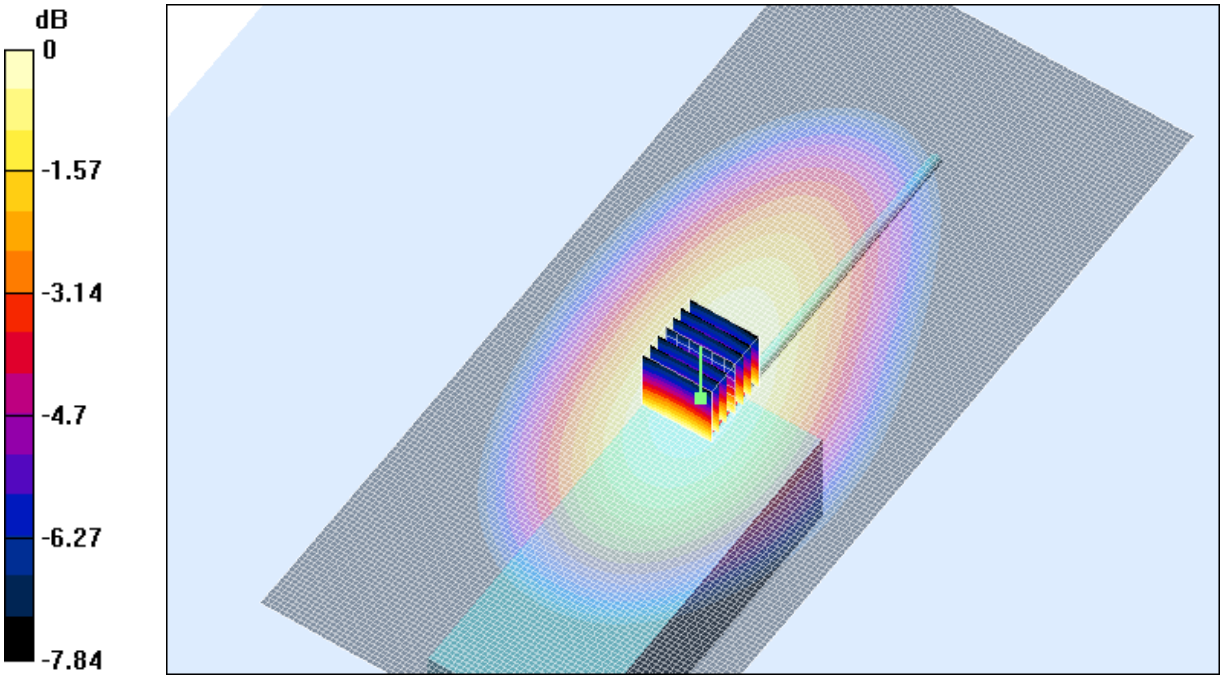

0 dB = 4.93mW/g

SAR MEASUREMENT PLOT 17

Ambient Temperature	**20.5 Degrees Celsius**
Liquid Temperature	**20.0 Degrees Celsius**
Humidity	**41.0 %**

This document shall not be copied or reproduced, except in full without the written permission of the Technical Director , EMC Technologies Pty. Ltd.

www. emctech.com.au

Test Date: 12 August 2004
File Name: 450 MHz Face Frontal (DAE442 Probe1377) Ant Wide Band 12-08-04.da4
DUT: Tait Transceiver Ant. Wide Band; Type: TPAH6A; Serial: 21000002

* Communication System: CW 450 MHz; Frequency: 520 MHz; Duty Cycle: 1:1
* Medium parameters used: σ = 0.894191; mho/m, ε_r = 41.487; ρ = 1000 kg/m^3
- Electronics: DAE3 Sn442; Probe: ET3DV6 - SN1377; ConvF(7, 7, 7)
- Phantom: Flat Phantom 10.1; Serial: P 10.1; Phantom section: Flat 2.2 Section

Channel 3 Test 2/Area Scan (81x181x1): Measurement grid: dx=20mm, dy=20mm
Reference Value = 19.1 V/m; Power Drift = -0.4 dB
Maximum value of SAR (interpolated) = 1.37 mW/g

Channel 3 Test 2/Zoom Scan (7x7x7)/Cube 0: Measurement grid: dx=5mm, dy=5mm, dz=5mm
Reference Value = 19.1 V/m; Power Drift = -0.4 dB
Maximum value of SAR (measured) = 1.35 mW/g
Peak SAR (extrapolated) = 1.95 W/kg
SAR(1 g) = 1.3 mW/g; SAR(10 g) = 0.940 mW/g

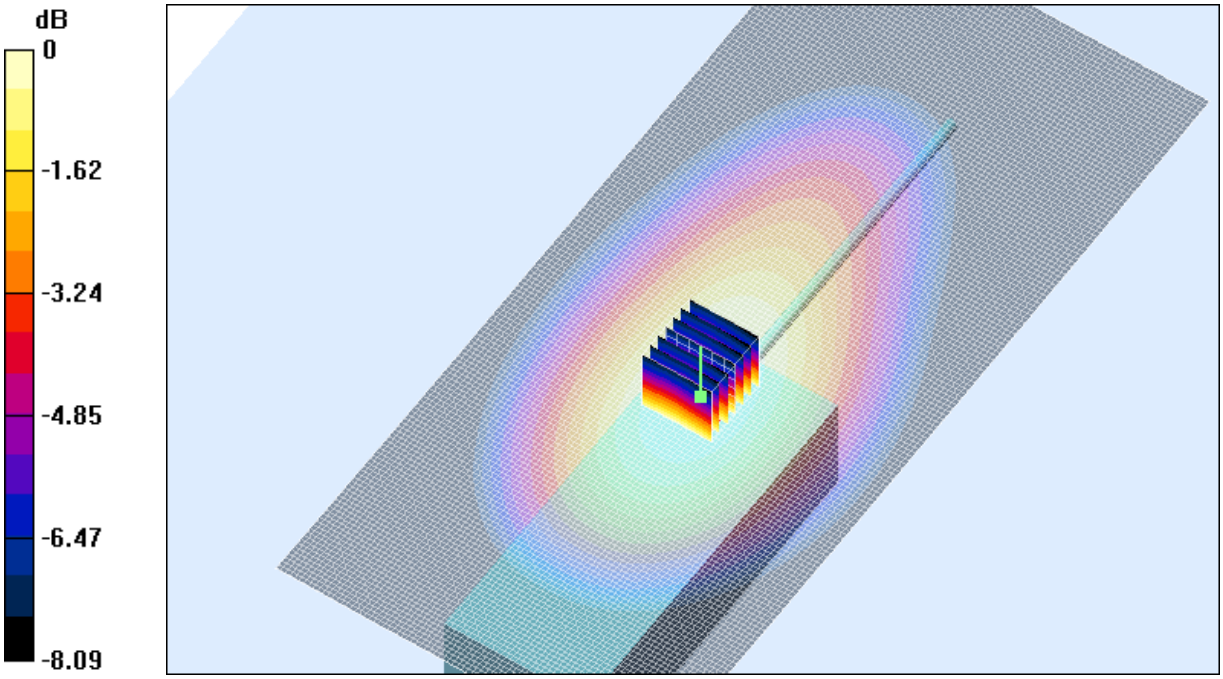

0 dB = 1.35mW/g

SAR MEASUREMENT PLOT 18

Ambient Temperature	**20.5 Degrees Celsius**
Liquid Temperature	**20.0 Degrees Celsius**
Humidity	**41.0 %**

This document shall not be copied or reproduced, except in full without the written permission of the Technical Director , EMC Technologies Pty. Ltd.

Test Date: 12 August 2004
File Name: 450 MHz Face Frontal (DAE442 Probe1377) Ant 435-470 MHz 12-08-04.da4
DUT: Tait Transceiver Ant. 435-470 MHz; Type: TPAH6A; Serial: 21000002

* Communication System: CW 450 MHz; Frequency: 450 MHz; Duty Cycle: 1:1
* Medium parameters used: σ = 0.847109; mho/m, ε_r = 43.2156; ρ = 1000 kg/m^3
- Electronics: DAE3 Sn442; Probe: ET3DV6 - SN1377; ConvF(7, 7, 7)
- Phantom: Flat Phantom 10.1; Serial: P 10.1; Phantom section: Flat 2.2 Section

Channel 1 Test/Area Scan (81x171x1): Measurement grid: dx=20mm, dy=20mm
Reference Value = 50.3 V/m; Power Drift = -0.6 dB
Maximum value of SAR (interpolated) = 3.93 mW/g

Channel 1 Test/Zoom Scan (7x7x7)/Cube 0: Measurement grid: dx=5mm, dy=5mm, dz=5mm
Reference Value = 50.3 V/m; Power Drift = -0.6 dB
Maximum value of SAR (measured) = 3.81 mW/g
Peak SAR (extrapolated) = 5.54 W/kg
SAR(1 g) = 3.67 mW/g; SAR(10 g) = 2.7 mW/g

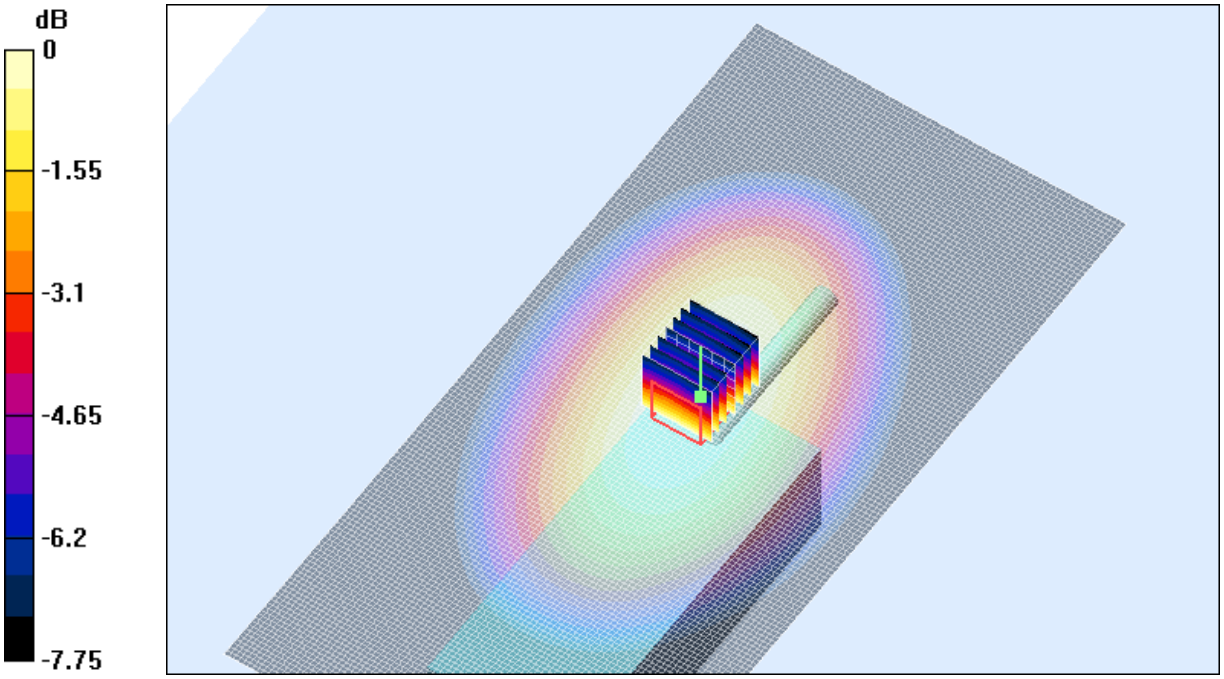

0 dB = 3.81mW/g

SAR MEASUREMENT PLOT 19

Ambient Temperature	**20.5 Degrees Celsius**
Liquid Temperature	**20.0 Degrees Celsius**
Humidity	**41.0 %**

This document shall not be copied or reproduced, except in full without the written permission of the Technical Director , EMC Technologies Pty. Ltd.

www. emctech.com.au

Test Date: 12 August 2004
File Name: 450 MHz Face Frontal (DAE442 Probe1377) Ant 470-520 MHz 12-08-04.da4
DUT: Tait Transceiver Ant. 470-520 MHz; Type: TPAH6A; Serial: 21000002

* Communication System: CW 450 MHz; Frequency: 485 MHz; Duty Cycle: 1:1
* Medium parameters used: σ = 0.874892; mho/m, ε_r = 42.708; ρ = 1000 kg/m^3
- Electronics: DAE3 Sn442; Probe: ET3DV6 - SN1377; ConvF(7, 7, 7)
- Phantom: Flat Phantom 10.1; Serial: P 10.1; Phantom section: Flat 2.2 Section

Channel 2 Test/Area Scan (81x171x1): Measurement grid: dx=20mm, dy=20mm
Reference Value = 44.1 V/m; Power Drift = -0.4 dB
Maximum value of SAR (interpolated) = 3.75 mW/g

Channel 2 Test/Zoom Scan (7x7x7)/Cube 0: Measurement grid: dx=5mm, dy=5mm, dz=5mm
Reference Value = 44.1 V/m; Power Drift = -0.4 dB
Maximum value of SAR (measured) = 3.72 mW/g
Peak SAR (extrapolated) = 5.34 W/kg
SAR(1 g) = 3.58 mW/g; SAR(10 g) = 2.61 mW/g

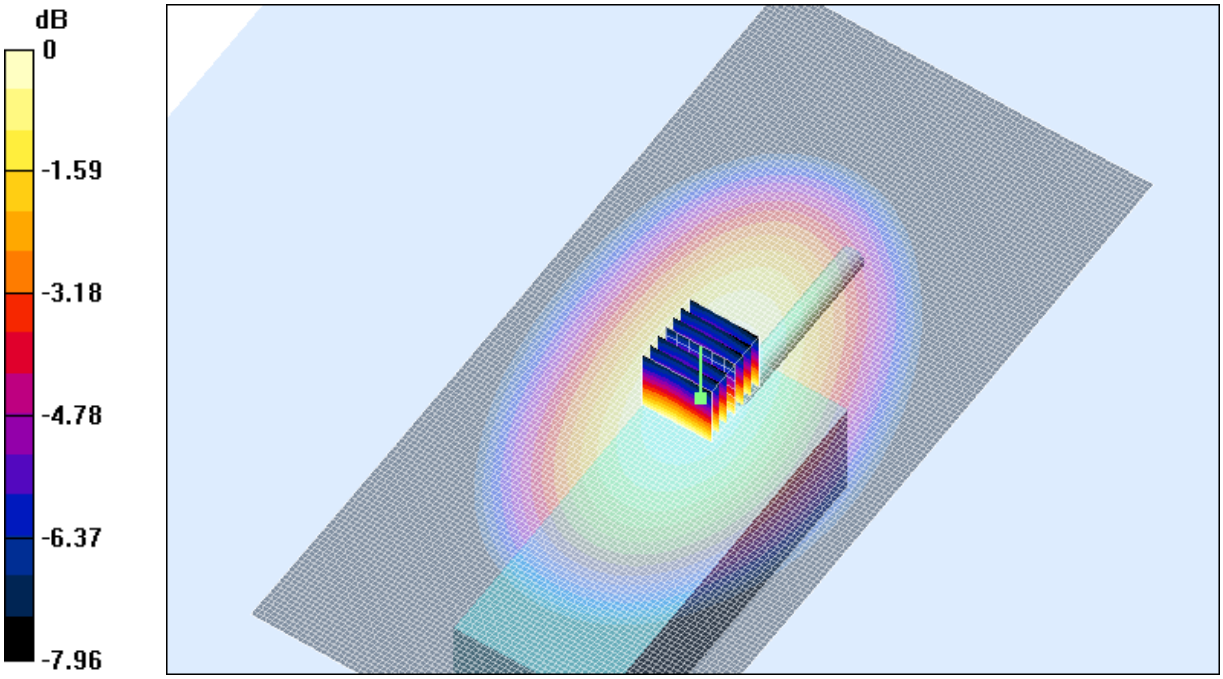

0 dB = 3.72mW/g

SAR MEASUREMENT PLOT 20

Ambient Temperature	**20.5 Degrees Celsius**
Liquid Temperature	**20.0 Degrees Celsius**
Humidity	**41.0 %**

This document shall not be copied or reproduced, except in full without the written permission of the Technical Director , EMC Technologies Pty. Ltd.

www. emctech.com.au

Z-Axis Graph for Plot 16

Z-Axis Graph for Plot 17

Z-Axis Graph for Plot 18

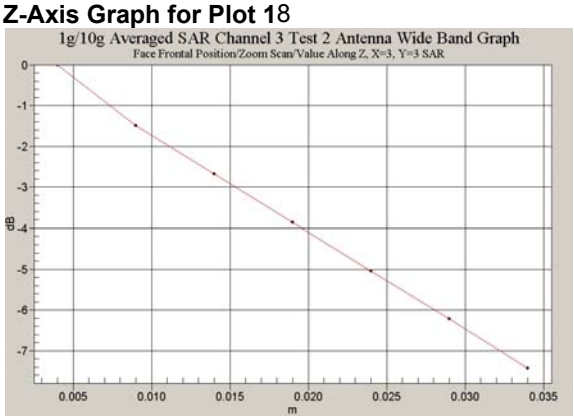

Z-Axis Graph for Plot 19

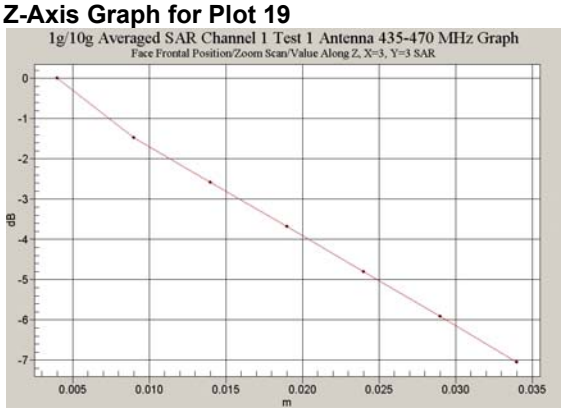

Z-Axis Graph for Plot 20

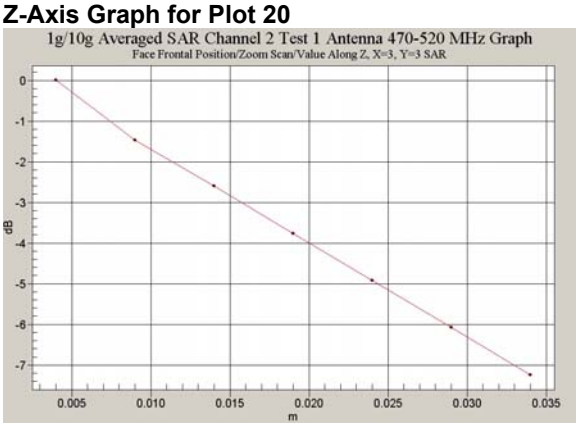

This document shall not be copied or reproduced, except in full without the written permission of the Technical Director , EMC Technologies Pty. Ltd.

Test Date: 12 August 2004
File Name: 450 MHz Face Frontal SPK-MIC (DAE442 Probe1377) Ant Wide Band 12-08-04.da4
DUT: Tait SPK-MIC Ant. Wide Band; Type: TPA-AA-204; Serial: Prototype

* Communication System: CW 450 MHz; Frequency: 450 MHz; Duty Cycle: 1:1
* Medium parameters used: σ = 0.847109; mho/m, ε_r = 43.2156; ρ = 1000 kg/m^3
- Electronics: DAE3 Sn442; Probe: ET3DV6 - SN1377; ConvF(7, 7, 7)
- Phantom: Flat Phantom 10.1; Serial: P 10.1; Phantom section: Flat 2.2 Section

Channel 1 Test/Area Scan (81x171x1): Measurement grid: dx=20mm, dy=20mm
Reference Value = 19.5 V/m; Power Drift = -0.2 dB
Maximum value of SAR (interpolated) = 2.48 mW/g

Channel 1 Test/Zoom Scan (7x7x7)/Cube 0: Measurement grid: dx=5mm, dy=5mm, dz=5mm
Reference Value = 19.5 V/m; Power Drift = -0.2 dB
Maximum value of SAR (measured) = 2.48 mW/g
Peak SAR (extrapolated) = 3.75 W/kg
SAR(1 g) = 2.38 mW/g; SAR(10 g) = 1.68 mW/g

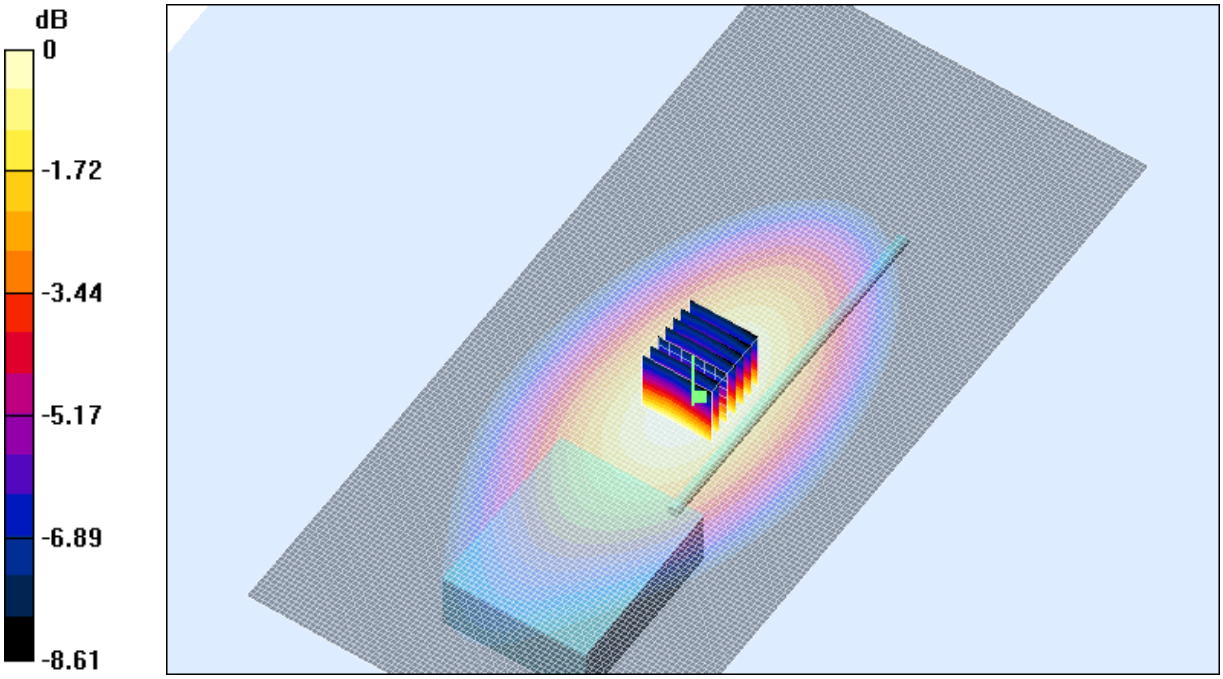

0 dB = 2.48mW/g

SAR MEASUREMENT PLOT 21

Ambient Temperature	**20.5 Degrees Celsius**
Liquid Temperature	**20.0 Degrees Celsius**
Humidity	**41.0 %**

This document shall not be copied or reproduced, except in full without the written permission of the Technical Director , EMC Technologies Pty. Ltd.

www. emctech.com.au

Test Date: 12 August 2004
File Name: 450 MHz Face Frontal SPK-MIC (DAE442 Probe1377) Ant Wide Band 12-08-04.da4
DUT: Tait SPK-MIC Ant. Wide Band; Type: TPA-AA-204; Serial: Prototype

* Communication System: CW 450 MHz; Frequency: 485 MHz; Duty Cycle: 1:1
* Medium parameters used: σ = 0.874892; mho/m, ε_r = 42.708; ρ = 1000 kg/m^3
- Electronics: DAE3 Sn442; Probe: ET3DV6 - SN1377; ConvF(7, 7, 7)
- Phantom: Flat Phantom 10.1; Serial: P 10.1; Phantom section: Flat 2.2 Section

Channel 2 Test/Area Scan (81x171x1): Measurement grid: dx=20mm, dy=20mm
Reference Value = 26.2 V/m; Power Drift = -0.4 dB
Maximum value of SAR (interpolated) = 4.89 mW/g

Channel 2 Test/Zoom Scan (7x7x7)/Cube 0: Measurement grid: dx=5mm, dy=5mm, dz=5mm
Reference Value = 26.2 V/m; Power Drift = -0.4 dB
Maximum value of SAR (measured) = 4.79 mW/g
Peak SAR (extrapolated) = 7.22 W/kg
SAR(1 g) = 4.58 mW/g; SAR(10 g) = 3.21 mW/g

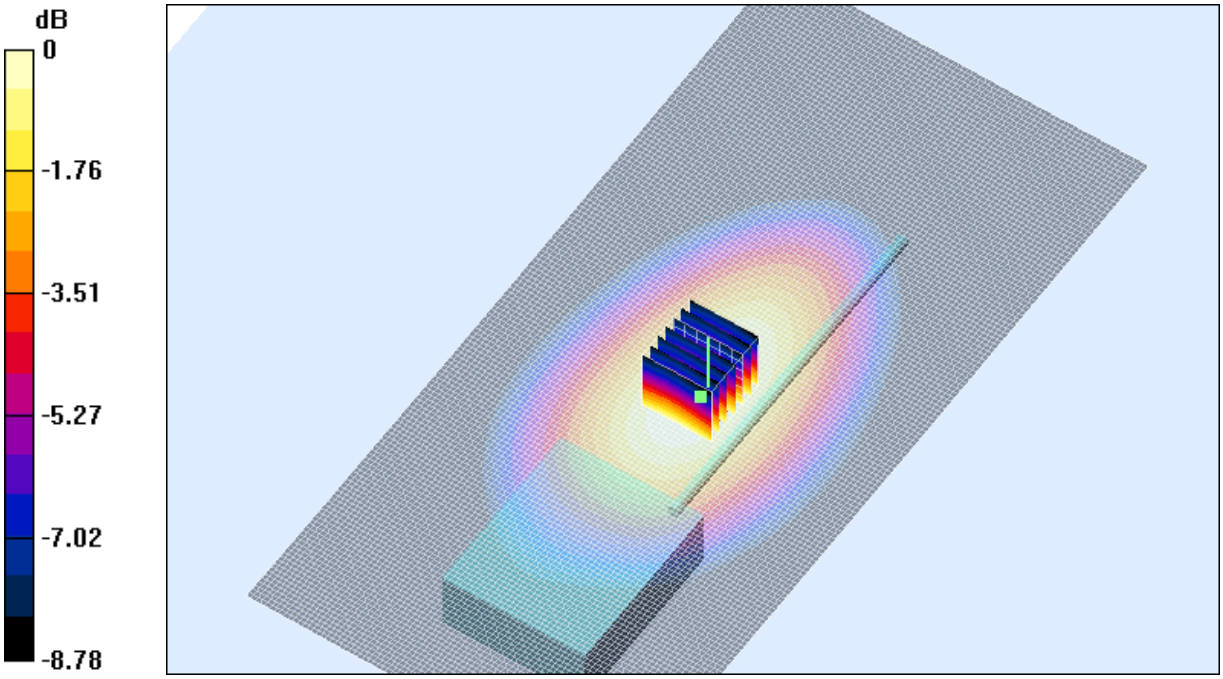

0 dB = 4.79mW/g

SAR MEASUREMENT PLOT 22

Ambient Temperature	**20.5 Degrees Celsius**
Liquid Temperature	**20.0 Degrees Celsius**
Humidity	**41.0 %**

This document shall not be copied or reproduced, except in full without the written permission of the Technical Director , EMC Technologies Pty. Ltd.

www. emctech.com.au

Test Date: 12 August 2004
File Name: 450 MHz Face Frontal SPK-MIC (DAE442 Probe1377) Ant Wide Band 12-08-04.da4
DUT: Tait SPK-MIC Ant. Wide Band; Type: TPA-AA-204; Serial: Prototype

* Communication System: CW 450 MHz; Frequency: 520 MHz; Duty Cycle: 1:1
* Medium parameters used: σ = 0.894191; mho/m, ε_r = 41.487; ρ = 1000 kg/m^3
- Electronics: DAE3 Sn442; Probe: ET3DV6 - SN1377; ConvF(7, 7, 7)
- Phantom: Flat Phantom 10.1; Serial: P 10.1; Phantom section: Flat 2.2 Section

Channel 3 Test/Area Scan (81x171x1): Measurement grid: dx=20mm, dy=20mm
Reference Value = 31.2 V/m; Power Drift = -0.3 dB
Maximum value of SAR (interpolated) = 6.28 mW/g

Channel 3 Test/Zoom Scan (7x7x7)/Cube 0: Measurement grid: dx=5mm, dy=5mm, dz=5mm
Reference Value = 31.2 V/m; Power Drift = -0.3 dB
Maximum value of SAR (measured) = 6.32 mW/g
Peak SAR (extrapolated) = 9.54 W/kg
SAR(1 g) = 6.05 mW/g; SAR(10 g) = 4.21 mW/g

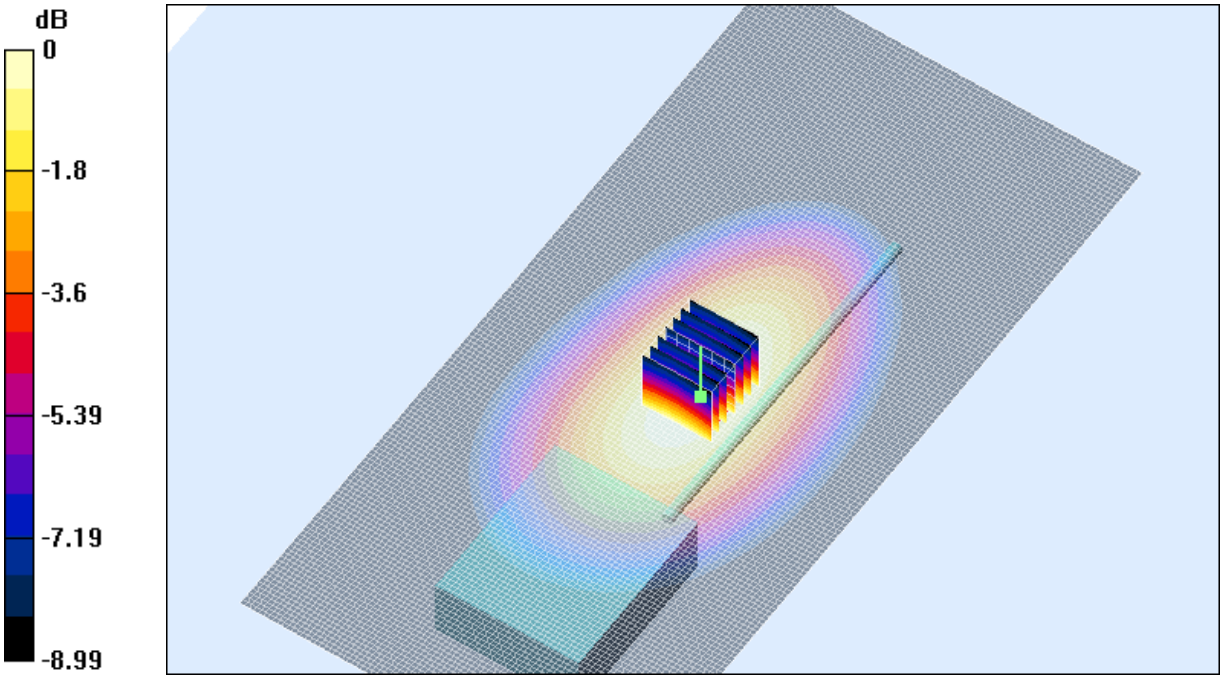

0 dB = 6.32mW/g

SAR MEASUREMENT PLOT 23

Ambient Temperature	**20.5 Degrees Celsius**
Liquid Temperature	**20.0 Degrees Celsius**
Humidity	**41.0 %**

This document shall not be copied or reproduced, except in full without the written permission of the Technical Director , EMC Technologies Pty. Ltd.

www. emctech.com.au

Test Date: 12 August 2004
File Name: 450 MHz Face Frontal SPK-MIC (DAE442 Probe1377) Ant 435-470 MHz 12-08-04.da4
DUT: Tait SPK-MIC Ant. 435-470 MHz; Type: TPA-AA-204; Serial: Prototype

* Communication System: CW 450 MHz; Frequency: 450 MHz; Duty Cycle: 1:1
* Medium parameters used: σ = 0.847109; mho/m, ε_r = 43.2156; ρ = 1000 kg/m^3
- Electronics: DAE3 Sn442; Probe: ET3DV6 - SN1377; ConvF(7, 7, 7)
- Phantom: Flat Phantom 10.1; Serial: P 10.1; Phantom section: Flat 2.2 Section

Channel 1 Test/Area Scan (81x131x1): Measurement grid: dx=20mm, dy=20mm
Reference Value = 40.1 V/m; Power Drift = -0.1 dB
Maximum value of SAR (interpolated) = 2.83 mW/g

Channel 1 Test/Zoom Scan (7x7x7)/Cube 0: Measurement grid: dx=5mm, dy=5mm, dz=5mm
Reference Value = 40.1 V/m; Power Drift = -0.1 dB
Maximum value of SAR (measured) = 2.84 mW/g
Peak SAR (extrapolated) = 4.26 W/kg
SAR(1 g) = 2.71 mW/g; SAR(10 g) = 1.9 mW/g

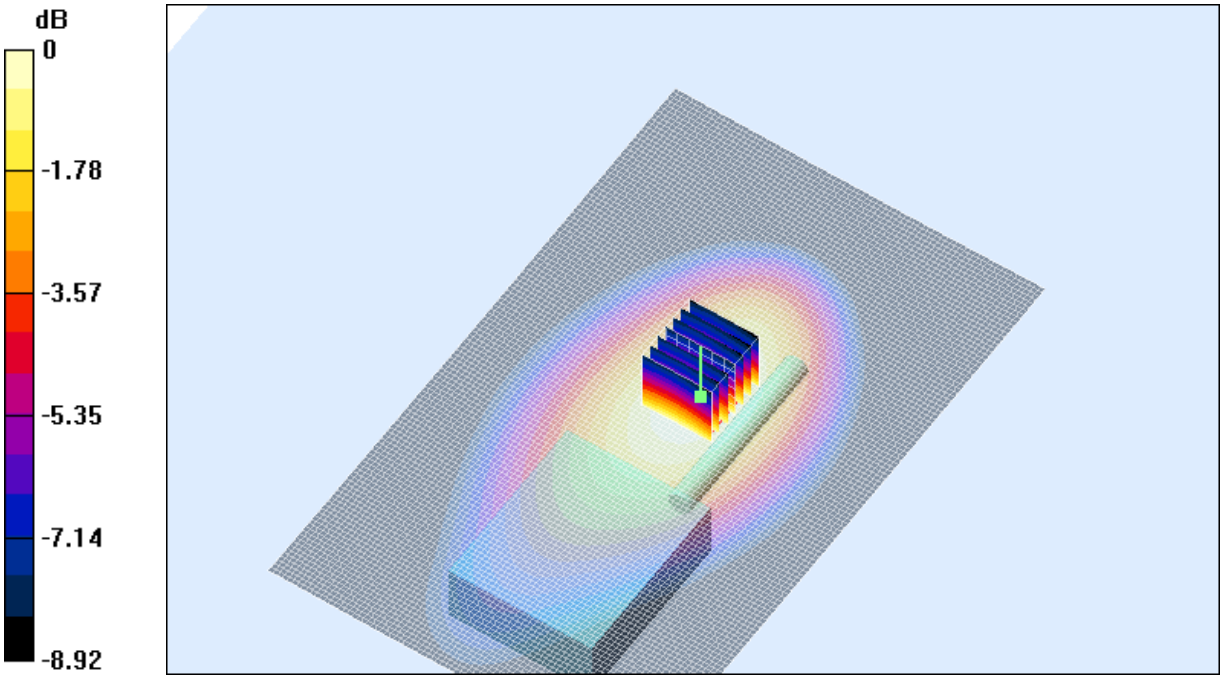

0 dB = 2.84mW/g

SAR MEASUREMENT PLOT 24

Ambient Temperature	**20.5 Degrees Celsius**
Liquid Temperature	**20.0 Degrees Celsius**
Humidity	**41.0 %**

This document shall not be copied or reproduced, except in full without the written permission of the Technical Director , EMC Technologies Pty. Ltd.

www. emctech.com.au

Test Date: 12 August 2004
File Name: 450 MHz Face Frontal SPK-MIC (DAE442 Probe1377) Ant 470-520 MHz 12-08-04.da4
DUT: Tait SPK-MIC Ant. 470-520 MHz; Type: TPA-AA-204; Serial: Prototype

* Communication System: CW 450 MHz; Frequency: 485 MHz; Duty Cycle: 1:1
* Medium parameters used: σ = 0.874892; mho/m, ε_r = 42.708; ρ = 1000 kg/m^3
- Electronics: DAE3 Sn442; Probe: ET3DV6 - SN1377; ConvF(7, 7, 7)
- Phantom: Flat Phantom 10.1; Serial: P 10.1; Phantom section: Flat 2.2 Section

Channel 2 Test/Area Scan (81x131x1): Measurement grid: dx=20mm, dy=20mm
Reference Value = 45.9 V/m; Power Drift = -0.1 dB
Maximum value of SAR (interpolated) = 3.84 mW/g

Channel 2 Test/Zoom Scan (7x7x7)/Cube 0: Measurement grid: dx=5mm, dy=5mm, dz=5mm
Reference Value = 45.9 V/m; Power Drift = -0.1 dB
Maximum value of SAR (measured) = 3.89 mW/g
Peak SAR (extrapolated) = 5.85 W/kg
SAR(1 g) = 3.71 mW/g; SAR(10 g) = 2.58 mW/g

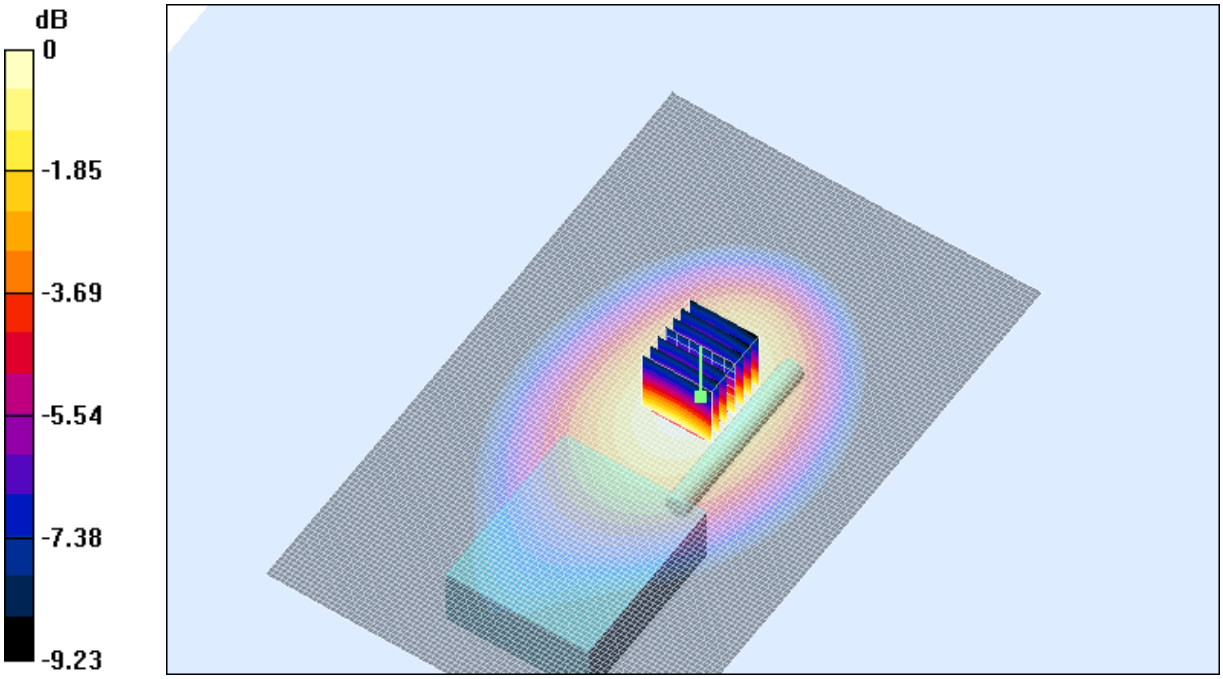

0 dB = 3.89mW/g

SAR MEASUREMENT PLOT 25

Ambient Temperature	**20.5 Degrees Celsius**
Liquid Temperature	**20.0 Degrees Celsius**
Humidity	**41.0 %**

This document shall not be copied or reproduced, except in full without the written permission of the Technical Director , EMC Technologies Pty. Ltd.

www. emctech.com.au

Z-Axis Graph for Plot 21

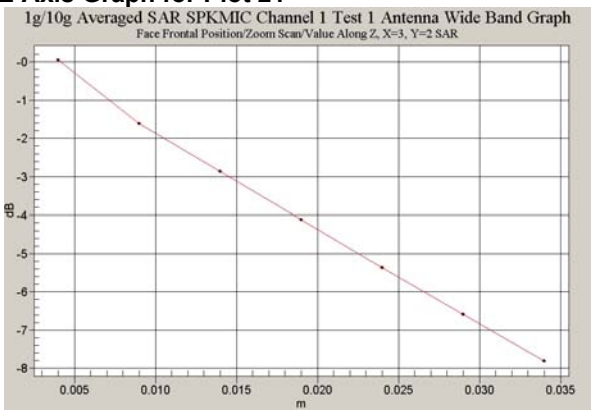

Z-Axis Graph for Plot 22

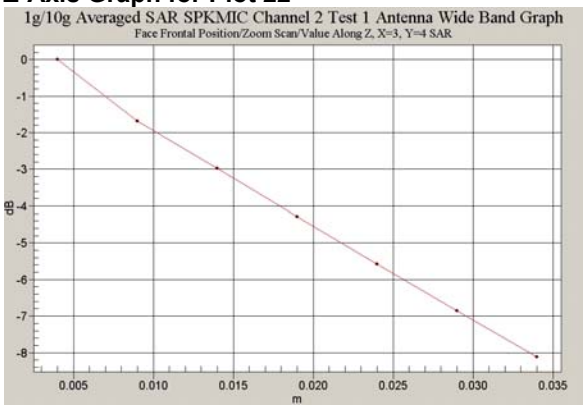

Z-Axis Graph for Plot 23

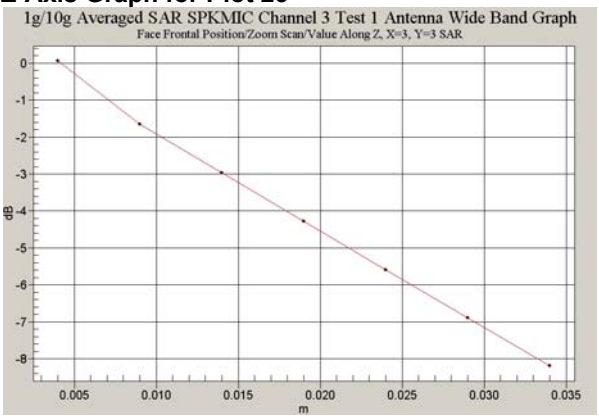

Z-Axis Graph for Plot 24

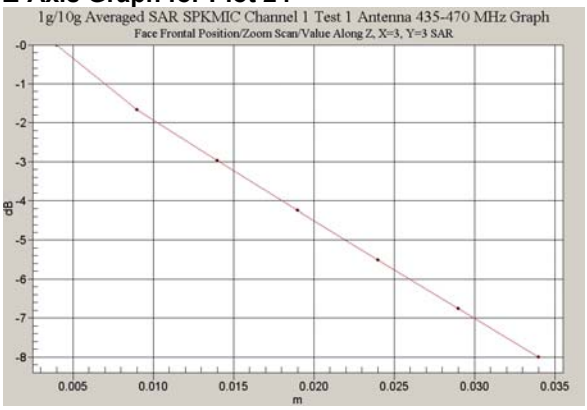

Z-Axis Graph for Plot 25

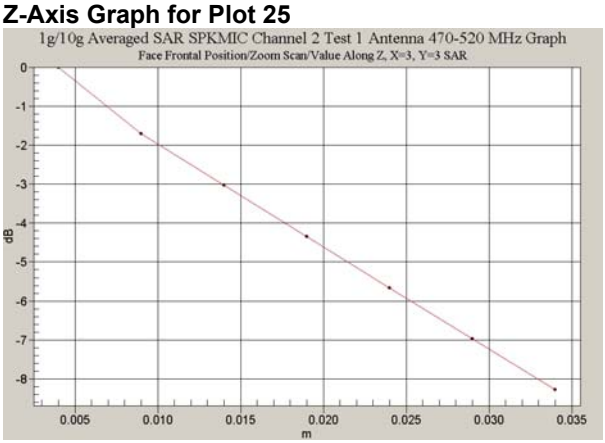

This document shall not be copied or reproduced, except in full without the written permission of the Technical Director , EMC Technologies Pty. Ltd.

www. emctech.com.au

Test Date: 10 August 2004
File Name: Validation 450 MHz Head (DAE442 Probe1377) 10-08-04.da4
DUT: Dipole 450 MHz; Type: D450V2; Serial: 1009

* Communication System: CW 450 MHz; Frequency: 450 MHz; Duty Cycle: 1:1
* Medium parameters used: σ = 0.839854; mho/m, ε_r = 42.1153; ρ = 1000 kg/m^3
- Electronics: DAE3 Sn442; Probe: ET3DV6 - SN1377; ConvF(7, 7, 7)
- Phantom: Flat Phantom 4.4; Serial: P 4.4; Phantom section: Flat Section

Channel 1Test/Area Scan (61x61x1): Measurement grid: dx=15mm, dy=15mm
Reference Value = 40.9 V/m; Power Drift = -0.007 dB
Maximum value of SAR (interpolated) = 1.42 mW/g

Channel 1Test/Zoom Scan (7x7x7)/Cube 0: Measurement grid: dx=5mm, dy=5mm, dz=5mm
Reference Value = 40.9 V/m; Power Drift = -0.007 dB
Maximum value of SAR (measured) = 1.43 mW/g
Peak SAR (extrapolated) = 2.37 W/kg
SAR(1 g) = 1.34 mW/g; SAR(10 g) = 0.862 mW/g

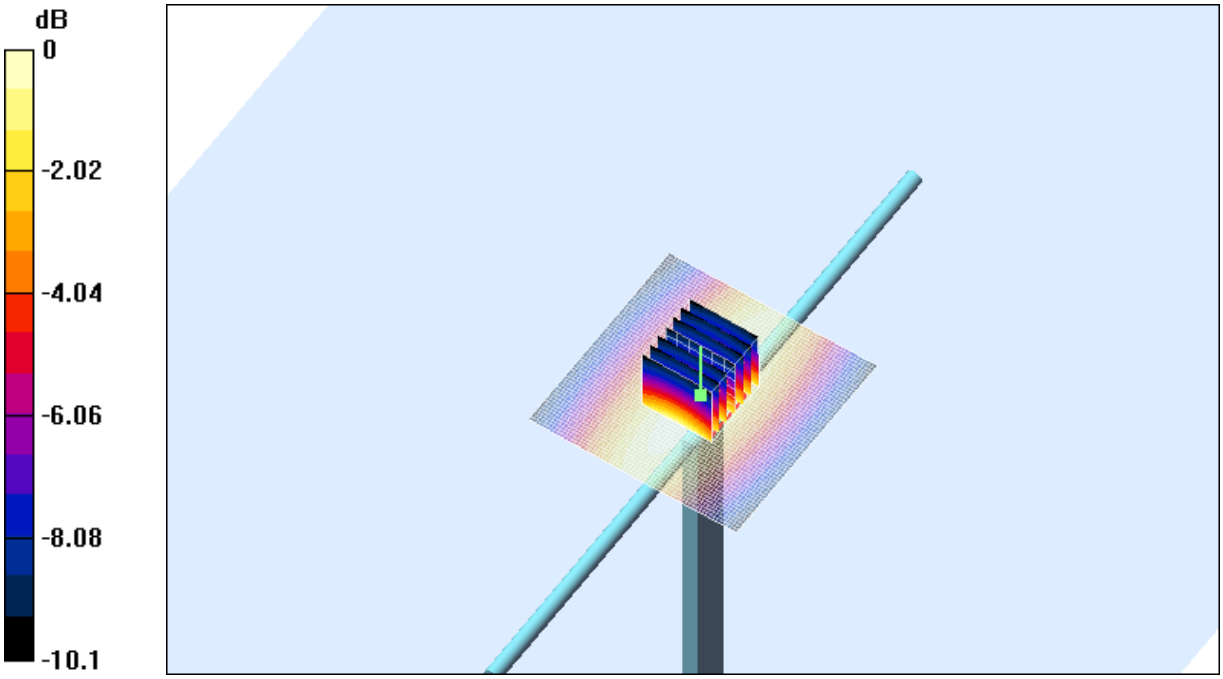

0 dB = 1.43mW/g

SAR MEASUREMENT PLOT 26

Ambient Temperature	**20.0 Degrees Celsius**
Liquid Temperature	**19.4 Degrees Celsius**
Humidity	**41.0 %**

This document shall not be copied or reproduced, except in full without the written permission of the Technical Director , EMC Technologies Pty. Ltd.

www. emctech.com.au

Test Date: 11 August 2004
File Name: Validation 450 MHz Head (DAE442 Probe1377) 11-08-04.da4
DUT: Dipole 450 MHz; Type: D450V2; Serial: 1009

* Communication System: CW 450 MHz; Frequency: 450 MHz; Duty Cycle: 1:1
* Medium parameters used: σ = 0.863421; mho/m, ε_r = 42.8759; ρ = 1000 kg/m^3
- Electronics: DAE3 Sn442; Probe: ET3DV6 - SN1377; ConvF(7, 7, 7)
- Phantom: Flat Phantom 4.4; Serial: P 4.4; Phantom section: Flat Section

Channel 1Test 2/Area Scan (61x61x1): Measurement grid: dx=15mm, dy=15mm
Reference Value = 40.5 V/m; Power Drift = 0.0 dB
Maximum value of SAR (interpolated) = 1.41 mW/g

Channel 1Test 2/Zoom Scan (7x7x7)/Cube 0: Measurement grid: dx=5mm, dy=5mm, dz=5mm
Reference Value = 40.5 V/m; Power Drift = 0.0 dB
Maximum value of SAR (measured) = 1.41 mW/g
Peak SAR (extrapolated) = 2.29 W/kg
SAR(1 g) = 1.33 mW/g; SAR(10 g) = 0.861 mW/g

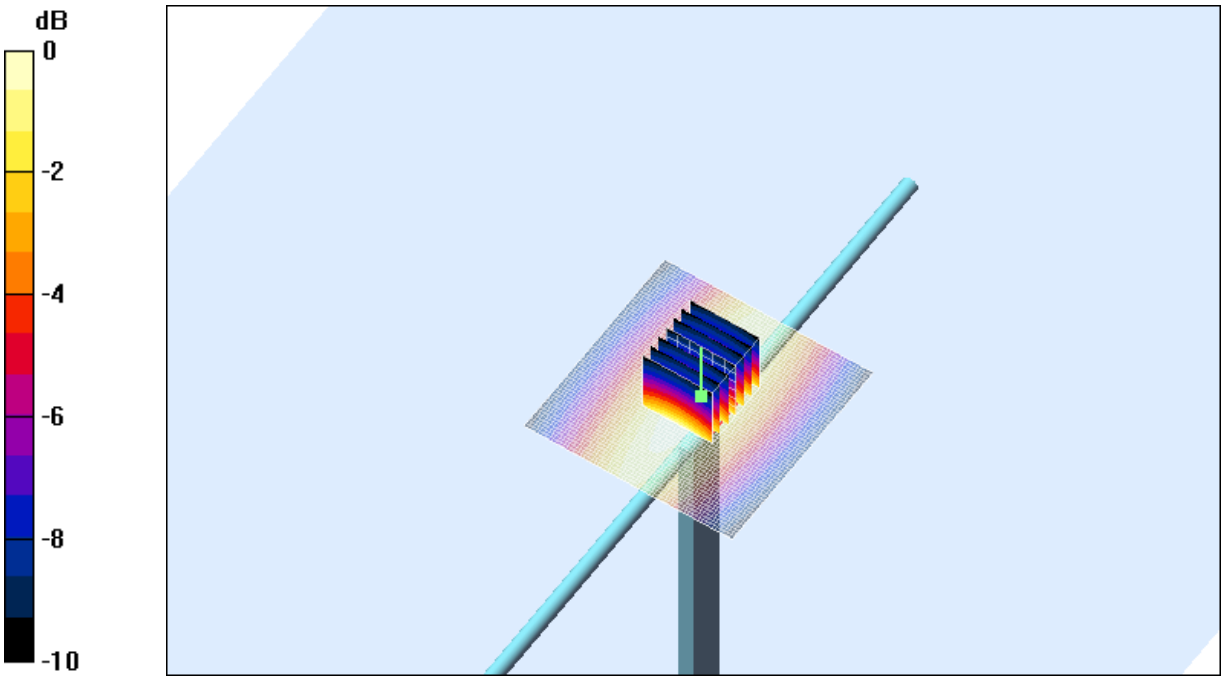

0 dB = 1.41mW/g

SAR MEASUREMENT PLOT 27

Ambient Temperature	**20.3 Degrees Celsius**
Liquid Temperature	**19.7 Degrees Celsius**
Humidity	**42.0 %**

This document shall not be copied or reproduced, except in full without the written permission of the Technical Director , EMC Technologies Pty. Ltd.

www. emctech.com.au

Test Date: 12 August 2004
File Name: Validation 450 MHz Head (DAE442 Probe1377) 12-08-04.da4
DUT: Dipole 450 MHz; Type: D450V2; Serial: 1009

* Communication System: CW 450 MHz; Frequency: 450 MHz; Duty Cycle: 1:1
* Medium parameters used: σ = 0.847109; mho/m, ε_r = 43.2156; ρ = 1000 kg/m^3
- Electronics: DAE3 Sn442; Probe: ET3DV6 - SN1377; ConvF(7, 7, 7)
- Phantom: Flat Phantom 4.4; Serial: P 4.4; Phantom section: Flat Section

Channel 1Test/Area Scan (61x61x1): Measurement grid: dx=15mm, dy=15mm
Reference Value = 40 V/m; Power Drift = -0.0 dB
Maximum value of SAR (interpolated) = 1.36 mW/g

Channel 1Test/Zoom Scan (7x7x7)/Cube 0: Measurement grid: dx=5mm, dy=5mm, dz=5mm
Reference Value = 40 V/m; Power Drift = -0.0 dB
Maximum value of SAR (measured) = 1.35 mW/g
Peak SAR (extrapolated) = 2.17 W/kg
SAR(1 g) = 1.29 mW/g; SAR(10 g) = 0.837 mW/g

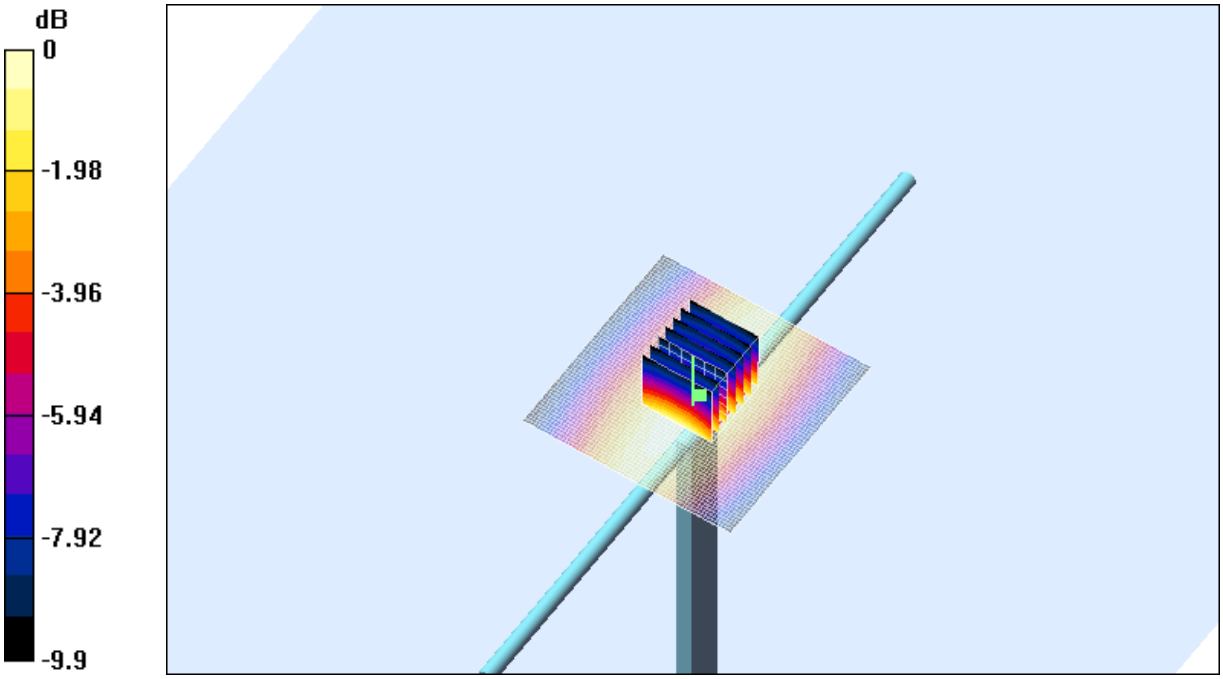

0 dB = 1.35mW/g

SAR MEASUREMENT PLOT 28

Ambient Temperature	**20.5 Degrees Celsius**
Liquid Temperature	**20.0 Degrees Celsius**
Humidity	**41.0 %**

This document shall not be copied or reproduced, except in full without the written permission of the Technical Director , EMC Technologies Pty. Ltd.

www. emctech.com.au

Z-Axis Graph for Plot 26

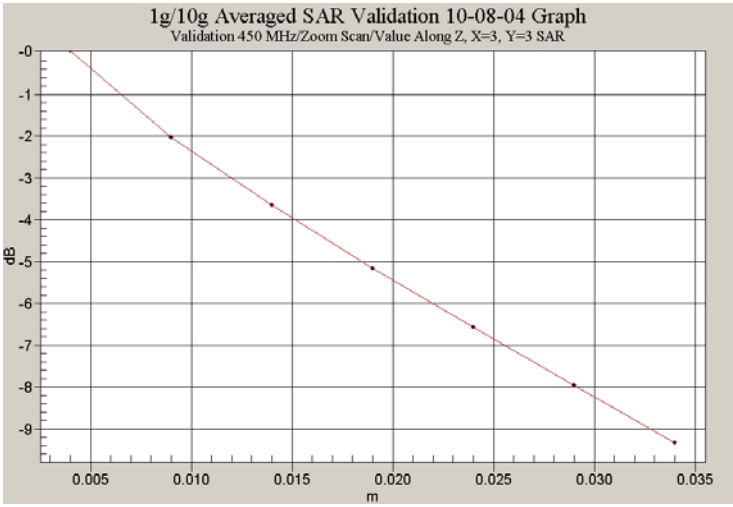

Z-Axis Graph for Plot 27

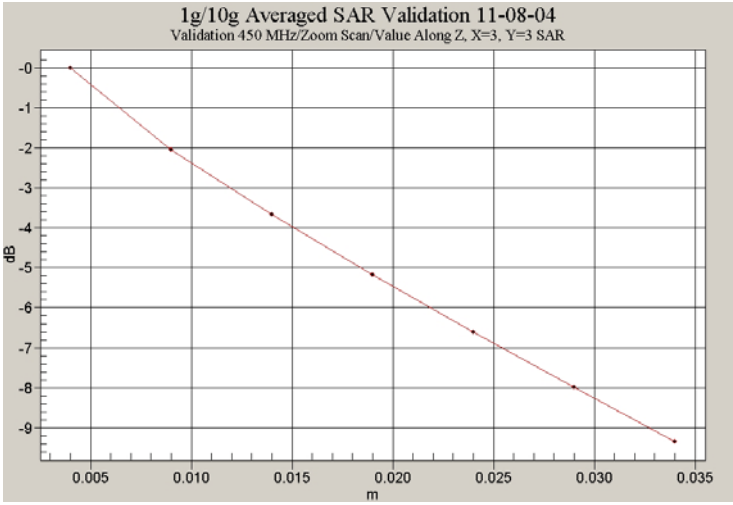

This document shall not be copied or reproduced, except in full without the written permission of the Technical Director , EMC Technologies Pty. Ltd.

APPENDIX C
SAR TESTING EQUIPMENT CALIBRATION CERTIFICATE ATTACHMENTS

Calibration Certificate Attachments

1. 450 MHz Dipole Calibration Sheet 6 Pages
2. E-Field Probe Calibration Sheet 10 Pages
3. E-Field Probe Additional Conversion Factors 2 Pages

This document shall not be copied or reproduced, except in full without the written permission of the Technical Director , EMC Technologies Pty. Ltd.